Board of Directors Agenda

July 30, 2026

Click link to access the meeting:

https://www.zoomgov.com/j/1602805839

Zoom Meeting ID

Ways to Join

Computer: Click the link above. You will be prompted to run the Zoom browser or Zoom application. Once signed on to the meeting, you will have the option to join using your computer audio system or phone.

Webinar Features:

Raise Hand	▶	Use the **raise hand** feature every time you wish to make a public comment.
CC	▶	Participants can enable **closed captioning** by clicking the CC icon. You may also view the full transcript and change the font size by clicking 'subtitle settings'. These features are not available via phone.
	▶	This symbol shows you are **muted**, click this icon to unmute your microphone.
	▶	This symbol shows you are currently **unmuted**, click this button to mute your microphone.
	▶	The chat feature should be used by panelists and attendees solely for "housekeeping" matters as comments made through this feature will not be retained as part of the meeting record. See the **Live Verbal Public Comment** for instructions on how to make a public comment.

Smartphone or Tablet: Download the Zoom app and join the meeting by clicking the link or using the webinar ID (found in the link).

Download on the App Store | GET IT ON Google Play

Phone:

1. If you are joining the meeting audio by phone and viewing the meeting on a device, dial the number provided in the 'join audio' phone call tab of the initial pop-up, and enter the Meeting ID (found in the link).
2. If you are joining by phone only, dial: **+1-669-900-9128** or **+1-253-215-8782** and type the meeting ID found in the link, press #. You will have access to the meeting audio, **but will NOT be able to view the PowerPoint presentations.**

Live Verbal Public Comments: Use the 'Raise Hand' icon every time you wish to make a public comment on an item. Raise your hand once the agenda item you wish to comment on has been called. In person public comments will be taken first, virtual attendees will be taken in the order in which they raise their hand. Requests to speak will not be taken after the public comment period ends, unless under the Chair's discretion. General Public Comment, at the beginning of the Board of Directors meeting only, will be limited to five speakers. Additional speakers with general public comments will be heard at the end of the meeting. Two-minutes of time is allotted per speaker, unless otherwise directed by the Chair.

Public Comments Made Via Zoom

1. Click the link found at the top of this instruction page
2. Click the raise hand icon located in the bottom center of the platform
3. The Clerk will announce your name when it is your turn to speak
4. Unmute yourself to speak

Public Comments Made by Phone Only

1. Dial **+1-669-900-9128**
2. Type in the zoom meeting ID found in the link and press #
3. Dial *9 to raise your hand via phone
4. The Clerk will call out the last 4 digits of your phone number to announce you are next to speak
5. Dial *6 to unmute yourself

Written Public Comments (before the meeting): Written public comments will be recorded in the public record and will be provided to MTS Board Members in advance of the meeting. Comments must be emailed or mailed to the Clerk of the Board* by 4:00pm the day prior to the meeting.

Translation Services: Requests for translation services can be made by contacting the Clerk of the Board* at least four working days in advance of the meeting.

In-Person Participation: In-person public comments will be heard first. Following in-person public comments, virtual attendees will be heard in the order in which they raise their hand via the Zoom platform. Speaking time will be limited to two minutes per person, unless specified by the Chairperson. Requests to speak will not be taken after the public comment period ends, unless under the Chair's discretion.

Instructions for providing in-person public comments:

1. Fill out a speaker slip located at the entrance of the Board Room;
2. Submit speaker slip to MTS staff seated at the entrance of the Board Room;
3. When your name is announced, please approach the podium located on the right side of the dais to make your public comments.

Members of the public are permitted to make general public comment at the beginning of the agenda or specific comments referencing items on the agenda during the public comment period. General Public Comment, at the beginning of the Board of Directors meeting only, will be limited to five speakers. Additional speakers with general public comments will be heard at the end of the meeting.

Assistive Listening Devices (ALDs): ALDs are available from the Clerk of the Board* prior to the meeting and are to be returned at the end of the meeting.

Reasonable Accommodations: As required by the Americans with Disabilities Act (ADA), requests for agenda information in an alternative format or to request reasonable accommodations to facilitate meeting participation, please contact the Clerk of the Board* at least two working days prior to the meeting.

***Contact Information:** Contact the Clerk of the Board via email at ClerkoftheBoard@sdmts.com, phone at **(619) 398-9561** or by mail at **1255 Imperial Ave. Suite 1000, San Diego CA 92101.**

Agenda de la Junta de Directores

July 30, 2026

Haga clic en el enlace para acceder a la reunión:

https://www.zoomgov.com/j/1602805839

ID de la reunión en Zoom

Formas de Participar

Computadora: Haga clic en el enlace más arriba. Recibirá instrucciones para operar el navegador de Zoom o la aplicación de Zoom. Una vez que haya iniciado sesión en la reunión, tendrá la opción de participar usando el sistema de audio de su computadora o teléfono.

Funciones del Seminario En Línea:

Levantar la mano	▶	Use la herramienta de **levantar la mano** cada vez que desee hacer un comentario público.
CC	▶	Los participantes pueden habilitar **el subtitulado** haciendo clic en el ícono CC. También puede ver la transcripción completa y cambiar el tamaño de letra haciendo clic en “configuración de subtítulos”. Estas herramientas no están disponibles por teléfono.
	▶	Este símbolo indica que usted se encuentra en **silencio**, haga clic en este ícono para quitar el silenciador de su micrófono.
	▶	Este símbolo indica que su micrófono se encuentra **encendido**. Haga clic en este símbolo para silenciar su micrófono.
	▶	La herramienta de chat deben usarla los panelistas y asistentes únicamente para asuntos “pertinentes a la reunión”, ya que comentarios realizados a través de esta herramienta no se conservarán como parte del registro de la reunión. Consulte el **Comentario público verbal** en vivo para obtener instrucciones sobre cómo hacer un comentario público.

Teléfono Inteligente o Tableta: Descargue la aplicación de Zoom y participe en la reunión haciendo clic en el enlace o usando el ID del seminario web (que se encuentra en el enlace).

Descarga en el App Store

Obténla en Google Play

Teléfono:

1. Si está participando en la reunión mediante audio de su teléfono y viendo la reunión en un dispositivo, marque el número indicado en la pestaña de llamada telefónica “unirse por audio” en la ventana emergente inicial e ingrese el ID de la reunión (que se encuentra en el enlace).
2. Si está participando solo por teléfono, marque: **+1-669-900-9128** o **+1-253-215-8782** e ingrese el ID de la reunión que se encuentra en el enlace, pulse #. Tendrá acceso al audio de la reunión, **pero NO podrá ver las presentaciones en PowerPoint.**

Comentarios Públicos Verbales en Vivo: Use la herramienta “levantar la mano” cada vez que desee hacer un comentario público sobre alguno de los artículos. Levante la mano una vez que el artículo de la agenda sobre el que desea comentar haya sido convocado. Los comentarios públicos en persona se escucharán primero, se escuchará a los asistentes virtuales en el orden en el que levanten la mano. No se aceptarán solicitudes para hablar después de que termine el periodo para hacer comentarios públicos, a menos de que el presidente determine de otra forma a su discreción. Comentarios públicos generales, únicamente al inicio de la reunión de la Junta de Directores, se limitarán a cinco personas que deseen hablar. Las personas adicionales que deseen aportar comentarios públicos generales podrán hacerlo al final de la reunión. Se otorga dos minutos de tiempo por persona que desee hablar, a menos de que el presidente instruya de otra forma. (*Consulte la página 2 para obtener instrucciones sobre cómo hacer un comentario público.*)

Comentarios Públicos a Través de Zoom

1. Haga clic en el enlace que se encuentra en la parte superior de esta página de instrucciones
2. Haga clic en el ícono de levantar la mano en el centro inferior de la plataforma
3. El secretario anunciará su nombre cuando sea su turno de hablar
4. Desactive el silenciador para que pueda hablar

Comentarios Públicos Realizados Únicamente por Teléfono

1. Marque el **+1-669-900-9128**
2. Ingrese el ID de la reunión en Zoom que se encuentra en el enlace y pulse #
3. Marque *9 para levantar la mano por teléfono
4. El secretario indicará los últimos 4 dígitos de su número de teléfono para anunciar que usted será el siguiente en hablar
5. Marque *6 para desactivar el silenciador

Comentarios Públicos por Escrito (Antes de la Reunión): Los comentarios públicos por escrito se registrarán en el registro público y se entregarán a los miembros de la Junta de MTS antes de la reunión. Los comentarios deben enviarse por correo electrónico o postal al secretario de la Junta* antes de las 4:00 p.m. el día anterior a la reunión.

Servicios de Traducción: Pueden solicitarse servicios de traducción comunicándose con el secretario de la Junta* por lo menos cuatro días hábiles antes de la reunión.

Participación en Persona: Los comentarios públicos en persona se escucharán primero. Después de los comentarios públicos en persona, se escuchará a los asistentes virtuales en el orden en el que levanten la mano a través de la plataforma de Zoom. El tiempo para hablar se limitará a dos minutos por persona, a menos de que el presidente especifique de otra forma. No se recibirán solicitudes para hablar después de que termine el periodo para hacer comentarios públicos, a menos de que el presidente determine de otra forma a su discreción.

Instrucciones para brindar comentarios públicos en persona:

1. Llene la boleta para personas que desean hablar que se encuentran en la entrada de la Sala de la Junta.
2. Entregue la boleta para personas que desean hablar al personal de MTS que se encuentra sentado en la entrada de la Sala de la Junta.
3. Cuando anuncien su nombre, por favor, acérquese al podio ubicado en el lado derecho de la tarima para hacer sus comentarios públicos.

Los miembros del público pueden hacer comentarios públicos generales al inicio de la agenda o comentarios específicos que hagan referencia a los puntos de la agenda durante el periodo de comentarios públicos. Los comentarios públicos generales únicamente al inicio de la reunión de la Junta de Directores, se limitarán a cinco personas que deseen hablar. Las personas adicionales que deseen aportar comentarios públicos generales podrán hacerlo al final de la reunión.

Dispositivos de Asistencia Auditiva (ALD, por sus siglas en inglés): Los ALD están disponibles con el secretario de la Junta* antes de la reunión y estos deberán ser devueltos al final de la reunión.

Facilidades Razonables: Según lo requerido por la Ley de Estadounidenses con Discapacidades (ADA, por sus siglas en inglés), para presentar solicitudes de información de la agenda en un formato alternativo o solicitar facilidades razonables para facilitar su participación en la reunión, por favor, comuníquese con el secretario de la Junta* por lo menos dos días hábiles antes de la reunión.

***Información de Contacto:** Comuníquese con el secretario de la Junta por correo electrónico en ClerkoftheBoard@sdmts.com, por teléfono al **(619) 398-9561** o por correo postal en **1255 Imperial Ave. Suite 1000, San Diego CA 92101.**

Metropolitan Transit System

Board of Directors

Agenda

July 30, 2026 at 9:00 a.m.

In-Person Participation: James R. Mills Building, 1255 Imperial Avenue, 10th Floor Board Room, San Diego CA 92101

Teleconference Participation: (669) 254-5252; Webinar ID: 160 280 5839, https://www.zoomgov.com/j/1602805839

NO.	ITEM SUBJECT AND DESCRIPTION	ACTION
1.	**Roll Call**	
2.	**Public Comments** This item is limited to five speakers with two minutes per speaker. Others will be heard after Board Discussion items. If you have a report to present, please give your copies to the Clerk of the Board.	
	CONSENT ITEMS	
3.	**Approval of Minutes** Action would approve the June 18, 2026 Board of Directors meeting minutes.	Approve
4.	**CEO Report**	Informational
5.	**Building C Crane Replacement – Work Order Agreement** Action would authorize the Chief Executive Officer (CEO) to execute Work Order No. MTSJOC441-06 under MTS Doc. PWG441.0-25, with ABC General Contractor, Inc. (ABCGC), in the amount of $338,841.87 for the removal and replacement of both overhead bridge cranes serving Trolley Maintenance Building C with higher-capacity cranes.	Approve
6.	**Grantville Transit Center Bus Bay Improvements – Work Order Agreement** Action would authorizes the Chief Executive Officer (CEO) to execute Work Order No. MTSJOC457-02 under MTS Doc. PWG457.0-26, with ABC General Contractor, Inc. (ABCGC), in the amount of $201,481.94 for the replacement of four (4) bus shelters that are no longer in a State of Good Repair, and the removal, alteration, and replacement of existing vehicular paving, pedestrian paving, and curb to allow for safer bus movements and passenger loading throughout the Grantville Transit Center.	Approve

7. **Federal Transit Administration (FTA) Section 5310 Enhanced Mobility for Seniors and Individuals with Disabilities – SANDAG Cycle 12 – Grant Award** — Approve

Action would 1) Accept the Section 5310 Enhanced Mobility for Seniors and Individuals with Disabilities Cycle 12 awarded by the San Diego Association of Governments (SANDAG) in the amount of $952,861 for paratransit vehicle procurement; and 2) Authorize $389,907.86 in local matching funds to fully fund the purchase of six (6) Americans with Disabilities Act (ADA) paratransit vehicles.

8. **Federal Transit Administration (FTA) Section 5310 Enhanced Mobility for Seniors and Individuals with Disabilities – SANDAG Cycle 13 – Grant Award** — Approve

Action would 1) Accept the Section 5310 Enhanced Mobility for Seniors and Individuals with Disabilities Cycle 13 awarded by the San Diego Association of Governments (SANDAG) in the amount of $749,642.57 for paratransit vehicle procurement; and 2) Authorize $369,331.48 in local matching funds to fully fund the purchase of five (5) Americans with Disabilities Act (ADA) paratransit vehicles.

9. **Bus Brake Subcomponents - Contract Award** — Approve

Action would authorize the Chief Executive Officer (CEO) to: 1) Execute MTS Doc. No. B0797.0-26, with EW Truck & Equipment Co. Inc (EW Truck), to furnish Bus Brake Subcomponents for five (5) years in an amount not to exceed $538,881.64 (inclusive of 7.75% CA sales tax); 2) Execute MTS Doc. No. B0798.0-26, with The Aftermarket Parts Company, LLC dba NFI Parts (NFI), to furnish Bus Brake Subcomponents for five (5) years in an amount not to exceed $281,573.24 (inclusive of 7.75% CA sales tax); 3) Execute MTS Doc. No. B0799.0-26, with Vehicle Maintenance Program, Inc. (VMP), to furnish Bus Brake Subcomponents for five (5) years in an amount not to exceed $690,009.46 (inclusive of 7.75% CA sales tax); 4) Execute MTS Doc. No. B0800.0-26, with Mohawk Manufacturing & Supply Co (Mohawk), to furnish Bus Brake Subcomponents for five (5) years in an amount not to exceed $275,449.64 (inclusive of 7.75% CA sales tax); and 5) Execute MTS Doc. No. B0801.0-26, with Muncie Reclamation and Supply Co (Muncie), to furnish Bus Brake Subcomponents for five (5) years in an amount not to exceed $380,602.18 (inclusive of 7.75% CA sales tax)

10. **California Department of Transportation (Caltrans) Program of Projects for Federal Fiscal Year (FFY) 2026 Federal Transit Administration (FTA) Section 5311 Formula Funding** — Approve

Action would approve Resolution No. 26-09, authorizing the use of and application for $458,073 of FFY 2026 Section 5311 funds for operating assistance in rural areas.

11. **California Department of Transportation (Caltrans) Program of Projects for Federal Fiscal Year (FFY) 2026 Federal Transit Administration (FTA) Intercity Bus Program 5311(f) - Competitive Funding** — Approve

Action would approve Resolution No. 26-10, authorizing the use of and application for $300,000 of FFY 2026 Section 5311(f) – Competitive funding for operating assistance in non-urbanized areas.

12. **Bus Engine and Transmission Overhaul - Contract Award** — Approve

Action would authorize the Chief Executive Officer (CEO) to: 1) Execute MTS Doc. No. B0802.0-26, with Harbor Diesel & Equipment, Inc., dba HD Industries (Harbor Diesel), in the amount of $6,755,731.05 (inclusive of CA 7.75% sales tax) for five (5) years, effective August 1, 2026, for the provision of Rebuilt ZF Transmissions (Group I) services and 2) Execute MTS Doc. No. B0803.0-26, with Cummins Inc. dba Cummins Sales and Service (Cummins), in the amount of $14,364,524.83 (inclusive of CA 7.75% sales tax) for five (5) years, effective August 1, 2026, for the provision of In-frame Engine Overhaul (Group II) services

13. **Pyramid Building Structural Repairs – Contract Award** — Approve

Action would authorize the Chief Executive Officer (CEO) to execute MTS Doc. No. PWG470.0-26, with ABC General Contractor, Inc. (ABCGC), in the amount of $898,497.52 for the complete structural upgrade and repair of the Pyramid Building.

14. **Imperial Avenue Division Richard A. Murphy (IAD RAM) Building Roofing Replacement – Contract Award** — Approve

Action would authorize the Chief Executive Officer (CEO) to execute MTS Doc. No. PWB466.0-26, with Chambers Inc. dba Roof Construction (Chambers), in the amount of $350,600.00 for the construction of the IAD RAM building roofing replacement.

15. **Adoption of 2026 Conflict of Interest Code – Amendment** — Adopt

Action would 1) Adopt Resolution No. 26-13 amending the MTS Conflict of Interest Code pursuant to the Political Reform Act of 1974; 2) Adopt the amended 2026 MTS Conflict of Interest Code; and 3) Forward the amended 2026 MTS Conflict of Interest Code to the County of San Diego (the designated code-reviewing body)

16. **San Diego Metropolitan Transit System (MTS) Employees Updated List Authorized to Transfer Funds to and from Local Agency Investment Fund (LAIF) Accounts – Resolution** — Approve

Action would approve Resolution No. 26-11 and Resolution No. 26-12 to update the list of MTS employees authorized to transfer funds to and from the MTS and San Diego Transit Corporation (SDTC) LAIF investment accounts, administered by the State Treasurer.

17.	**Operations Budget Status Report for May 2026**	Informational
18.	**Purchase of Special Trackwork for the Broadway Wye Improvements – Contract Award** Action would authorize the Chief Executive Officer (CEO) to execute MTS Doc. No. L1714.0-26, with Voestalpine Railway Systems Nortrak LLC (Nortrak), for the purchase of Special Trackwork for the Broadway Wye Improvements in the amount of $2,058,158.61 (inclusive of 7.75% CA Sales Tax).	Approve
19.	**Downtown Parallel Feeder and Street Trackage Replacement – Work Order Amendment** Action would authorize the Chief Executive Officer (CEO) to execute Amendment No. WOA354-AE-59.01 under MTS Doc. PWL354.0-22, with Mott McDonald (MM), in the amount of $265,817.87 for the additional engineering services needed for the special track replacement at Park Boulevard and K Street and Park Boulevard and L Street as part of the Downtown Parallel Feeder and Street Trackage Replacement Project.	Approve
20.	**Proposed Revisions to San Diego Metropolitan Transit System (MTS) Board Policy No. 35 "Drug and Alcohol Policy"** Action would approve the proposed revisions to Board Policy No. 35 "Drug and Alcohol Policy".	Approve
21.	**Tenable Cybersecurity Software Renewal – Contract Award** Action would authorize the Chief Executive Officer (CEO) to execute MTS Doc. No. G3243.0-26, with DI Technology Group Inc (DI Technology), to provide Tenable Cybersecurity Software subscription renewal, for a contract period of five (5) years, in the amount of $805,475.00.	Approve
22.	**Grossmont Transit Center - Elevator Modernization Design Build – Contract Award** Action would 1) Authorize the Chief Executive Officer (CEO) to execute MTS Doc No. PWL465.0-26, with Structura Builders of California Joint Venture (Structura), in the amount of $2,117,654.88 for the modernization of two (2) elevators and stair tower improvements at the Grossmont Transit Center and 2) Authorize a 10% contingency fund of $211,765.49 for contract changes orders pursuant to Board Policy 41.4.4.	Approve
23.	**Proposed Amendments to For-Hire Vehicle Services Regulations within MTS Ordinance No. 11 and MTS Board Policy No. 34** Action would adopt the proposed amendments to Ordinance No. 11 "An Ordinance Providing for the Licensing and the Regulating of Transportation Services Within the City and County by the Adoption of a Uniform Paratransit Ordinance" and revisions to Board Policy No. 34 "For-Hire Vehicle Services".	Adopt

OTHER ITEMS

24. Chair, Board Member and Chief Executive Officer's (CEO's) Communications

25. Remainder of Public Comments Not on The Agenda

This item is a continuation of item No. 2 (Public Comment), in the event all speakers who request to comment on item No. 2 are not called. If all Public Comment is accepted during item No. 2, no additional public comment will be accepted under this item.

26. Next Meeting Date

The next Board of Director's meeting is scheduled for September 17, 2026 at 9:00am.

ADJOURNMENT

27. Adjournment

Metropolitan Transit System

Junta Directiva

Orden Del Día

30 de Julio de 2026 a las 9:00 a. m.

Participación presencial: James R. Mills Building, 1255 Imperial Avenue, 10th Floor Board Room, San Diego CA 92101

Participación en teleconferencia: (669) 254-5252; Id. del seminario web: 160 280 5839, https://www.zoomgov.com/j/1602805839

NO.	ASUNTO Y DESCRIPCIÓN DEL TEMA	ACCIÓN
1.	**Lista de Asistencia**	
2.	**Comentarios del Público** Este punto está limitado a cinco oradores, con dos minutos cada uno. Se escucharán otros temas después de los temas de la Junta directiva. Si desea presentar algún informe, por favor entregue sus copias al secretario de la Junta.	

TEMAS DE CONSENTIMIENTO

3.	**Aprobación de las Actas** La acción aprobaría el June 18, 2026 acta de la reunión de la Junta directiva.	Aprobar
4.	**Informe del Director Ejecutivo**	Informativa
5.	**Sustitución de la Grúa del Edificio C – Acuerdo de Orden de Trabajo** La acción autorizaría al Director ejecutivo (CEO) a ejecutar la Orden de trabajo N.° MTSJOC441-06 en virtud del documento PWG441.0-25 de MTS, con ABC General Contractor, Inc. (ABCGC), por un monto de $338,841.87 para la remoción y reemplazo de ambas grúas puente aéreas que dan servicio al Edificio de mantenimiento de carros C por grúas de mayor capacidad.	Aprobar
6.	**Mejoras en la Dársena Para Autobuses del Centro de Transporte Colectivo de Grantville – Acuerdo de Orden de Trabajo** La acción autoriza al Director ejecutivo (CEO) a ejecutar la Orden de trabajo N.° MTSJOC457-02 en virtud del documento PWG457.0-26 de MTS, con ABC General Contractor, Inc. (ABCGC), por un monto de $201,481.94 para el reemplazo de cuatro (4) paradas de autobús que ya no están en buen estado de funcionamiento, y la remoción, alteración y reemplazo del pavimento vehicular, el pavimento peatonal y el bordillo existentes para mejorar la seguridad en los movimientos de autobuses y carga de pasajeros en todo el Centro de Transporte Público de Grantville.	Aprobar

7.	**Administración Federal de Transporte Colectivo (FTA), Sección 5310 de Movilidad mejorada Para Personas Mayores y Personas con Discapacidades Ciclo 12 de SANDAG – Adjudicación de Subvención** La acción implicaría 1) aceptar la sección 5310 de Movilidad mejorada para personas mayores y personas con discapacidades, ciclo 12, otorgada por la San Diego Association of Governments (SANDAG) por un monto de $952,861 para la adquisición de vehículos de transporte adaptado; y 2) autorizar $389,907.86 en fondos de contrapartida locales para financiar completamente la compra de seis (6) vehículos de transporte adaptado según la Ley de Estadounidenses con Discapacidades (ADA).	Aprobar
8.	**Administración Federal de Transporte Colectivo (FTA), Sección 5310 de Movilidad Mejorada Para Personas Mayores y Personas con Discapacidades – Ciclo 13 de SANDAG – Adjudicación de Subvención** La acción implicaría 1) aceptar la sección 5310 de Movilidad mejorada para personas mayores y personas con discapacidades, ciclo 13, otorgada por la San Diego Association of Governments (SANDAG) por un monto de $749,642.57 para la adquisición de vehículos de transporte adaptado; y 2) autorizar $369,331.48 en fondos de contrapartida locales para financiar completamente la compra de cinco (5) vehículos de transporte adaptado según la Ley de Estadounidenses con Discapacidades (ADA).	Aprobar
9.	**Subcomponentes de Frenos de Autobús - Adjudicación de Contrato** La acción autorizaría al Director ejecutivo (CEO) a: 1) ejecutar el documento N.º B0797.0-26 de MTS, con EW Truck & Equipment Co. Inc (EW Truck), para suministrar subcomponentes de frenos de autobús durante cinco (5) años por un monto que no exceda los $538,881.64 (incluido el 7.75 % de impuesto sobre las ventas de CA); 2) ejecutar el documento N.º B0798.0-26 de MTS, con The Aftermarket Parts Company, LLC dba NFI Parts (NFI), para suministrar subcomponentes de frenos de autobús durante cinco (5) años por un monto que no exceda los $281,573.24 (incluido el 7.75 % de impuesto sobre las ventas de CA); 3) ejecutar el documento N.º B0799.0-26 de MTS, con Vehicle Maintenance Program, Inc. (VMP), para suministrar subcomponentes de frenos de autobús durante cinco (5) años por un monto que no exceda los $690,009.46 (incluido el 7.75 % de impuesto sobre las ventas de CA); 4) ejecutar el documento N.º B0800.0-26 de MTS, con Mohawk Manufacturing & Supply Co (Mohawk), para suministrar subcomponentes de frenos de autobús durante cinco (5) años por un monto que no exceda los $275,449.64 (incluido el 7.75 % de impuesto sobre las ventas de CA); y 5) ejecutar documento N.º B0801.0-26, con Muncie Reclamation and Supply Co (Muncie), para suministrar subcomponentes de frenos de autobús durante cinco (5) años por un monto que no exceda los $380,602.18 (incluido el 7.75 % de impuesto sobre las ventas de CA).	Aprobar
10.	**Programa de Proyectos del Departamento de Transporte de California (Caltrans) Para el Año Fiscal Federal (FFY) 2026, Financiamiento Mediante Fórmula de la Sección 5311 de la Administración Federal de Transporte Colectivo (FTA)** La acción aprobaría la resolución N.º 26-09, que autoriza el uso y la solicitud de $458,073 de los fondos de la Sección 5311 del año fiscal federal 2026 para asistencia operativa en áreas rurales.	Aprobar

11.	**Programa de proyectos del Departamento de Transporte de California (Caltrans) Para el Año Fiscal Federal (FFY) 2026, Programa 5311(f) del Autobús Interurbano de la Administración Federal de Transporte Colectivo (FTA) - Financiamiento Competitivo** La acción aprobaría la resolución N.º 26-10, que autoriza el uso y la solicitud de $300,000 de los fondos de la Sección 5311(f) del año fiscal federal 2026 para asistencia operativa en áreas no urbanizadas.	Aprobar
12.	**Revisión Completa del Motor y la Transmisión de Autobuses - Adjudicación del Contrato** La acción autorizaría al Director ejecutivo (CEO) a: 1) ejecutar el documento N.º B0802.0-26 de MTS, con Harbor Diesel & Equipment, Inc., dba HD Industries (Harbor Diesel), por un monto de $6,755,731.05 (incluido el impuesto sobre las ventas de CA del 7.75 %) por un plazo de cinco (5) años, a partir del 1.° de agosto de 2026, para la prestación de servicios de transmisiones ZF reconstruidas (Grupo I) y 2) ejecutar el documento N.º B0803.0-26 de MTS, con Cummins Inc. dba Cummins Sales and Service (Cummins), por un monto de $14,364,524.83 (incluido el impuesto sobre las ventas de CA del 7.75 %) por un plazo de cinco (5) años, con vigencia a partir del 1.° de agosto de 2026, para la prestación de servicios de reacondicionamiento de motores en el chasis (Grupo II).	Aprobar
13.	**Reparaciones Estructurales del Edificio Pyramid – Adjudicación del Contrato** La acción autorizaría al Director ejecutivo (CEO) a ejecutar el documento N.º PWG470.0-26 de MTS, con ABC General Contractor, Inc. (ABCGC), por un monto de $898,497.52 para la mejora estructural completa y la reparación del edificio Pyramid.	Aprobar
14.	**Reemplazo de Techos de los Edificios de Imperial Avenue Division Richard A. Murphy (IAD RAM) – Adjudicación del Contrato** La acción autorizaría al Director ejecutivo (CEO) a ejecutar el documento N.º PWB466.0-26 de MTS, con Chambers Inc. dba Roof Construction (Chambers), por un monto de $350,600.00 para la construcción del reemplazo del techo del edificio IAD RAM.	Aprobar
15.	**Adopción del Código de Conflicto de Intereses de 2026 – Enmienda** La acción 1) adoptaría la resolución N.° 26-13 que enmienda el Código de conflicto de intereses de MTS de conformidad con la Ley de Reforma Política de 1974; 2) adoptaría la versión enmendada del Código de conflicto de intereses de MTS de 2026; y 3) remitiría el Código de conflicto de intereses de MTS de 2026 enmendado al Condado de San Diego (el organismo designado para la revisión del código).	Adoptar
16.	**Lista actualizada de Empleados del Sistema de Transporte Colectivo Metropolitano de San Diego (MTS) Autorizados Para Transferir Fondos Desde y Hacia las Cuentas del Fondo de Inversión para Agencias Locales (LAIF) – Resolución** La acción aprobaría las resoluciones N.° 26-11 y 26-12 para actualizar la lista de empleados de MTS autorizados a transferir fondos desde y hacia las cuentas de inversión del LAIF de MTS y San Diego Transit Corporation (SDTC), administradas por la Tesorería del Estado.	Aprobar

17.	**Informe Sobre el estado del Presupuesto Operativo Correspondiente a Mayo de 2026**	Informativa
18.	**Adquisición de Instalaciones para Vías Especiales para las Mejoras de Broadway Wye – Adjudicación del Contrato** La acción autorizaría al Director ejecutivo (CEO) a ejecutar el documento N.º L1714.0-26 de MTS, con Voestalpine Railway Systems Nortrak LLC (Nortrak), para la compra de instalaciones de vías especiales para las mejoras de Broadway Wye por un monto de $2,058,158.61 (incluido el 7.75 % de impuesto sobre las ventas de CA).	Aprobar
19.	**Sustitución de la vía Paralela de Entrada y de la vía Pública en el Centro de la Ciudad - Enmienda de la Orden de Trabajo** La acción autorizaría al Director ejecutivo (CEO) a ejecutar la enmienda N.º WOA354-AE-59.01 del documento PWL354.0-22 de MTS, con Mott McDonald (MM), por un monto de $265,817.87 para los servicios de ingeniería adicionales necesarios para el reemplazo de vías especiales en Park Boulevard y K Street y Park Boulevard y L Street como parte del proyecto de reemplazo de vías paralelas de entrada y de las calles del centro de la ciudad.	Aprobar
20.	**Propuesta de Revisión de la Política N.° 35 de la Junta Directiva del Sistema de Transporte Colectivo Metropolitano (MTS) de San Diego Sobre "Políticas Sobre Drogas y Alcohol"** La acción aprobaría las revisiones propuestas a la política N.° 35 de la Junta directiva, “Política sobre drogas y alcohol”.	Aprobar
21.	**Renovación del Contrato de Software de Ciberseguridad Tenable – Adjudicación del Contrato** La acción autorizaría al Director ejecutivo (CEO) a ejecutar el documento N.º G3243.0-26 de MTS, con DI Technology Group Inc (DI Technology), para proporcionar la renovación de la suscripción al software de ciberseguridad Tenable, por un período contractual de cinco (5) años y por un monto de $805,475.00.	Aprobar
22.	**Centro de Transporte Colectivo de Grossmont - Diseño y Construcción de Modernización de los Ascensores - Adjudicación del Contrato** La acción 1) autorizaría al Director ejecutivo (CEO) a ejecutar el documento N.º PWL465.0-26 de MTS con Structura Builders of California Joint Venture (Structura), por un monto de $2,117,654.88 para la modernización de dos (2) ascensores y mejoras en la torre de escaleras en el Centro de Transporte Colectivo de Grossmont y 2) autorizaría un fondo de contingencia del 10 % de $211,765.49 para órdenes de cambios de contrato de conformidad con la política de la Junta 41.4.4.	Aprobar
23.	**Enmiendas Propuestas a las Regulaciones de Servicios de Vehículos de Alquiler Dentro de la Ordenanza de MTS N.º 11 y la Política de la Junta Directiva de MTS N.º 34** La acción adoptaría las enmiendas propuestas a la Ordenanza N.º 11, “Una Ordenanza que establece la concesión de licencias y la regulación de los servicios de transporte dentro de la ciudad y el condado mediante la adopción de una Ordenanza uniforme de transporte adaptado” y las revisiones a la política de la Junta N.º 34, “Servicios de vehículos de alquiler”.	Adoptar

OTROS TEMAS

24. Comunicaciones del Presidente, los Miembros de la Junta Directiva y el Director Ejecutivo (CEO)

25. El Resto de los Comentarios del Público no Están Contemplados en el Orden del Día

Este tema es una continuación del N.° 2 (Comentarios del público), en caso de que no se conceda la palabra a todos los oradores que soliciten comentar en el tema N.° 2. Si se aceptan todos los comentarios del público durante el tema N.° 2, no se aceptarán comentarios adicionales del público en relación con este punto.

26. Fecha de la Próxima Reunión

La próxima reunión de la Junta directiva está programada para el September 17, 2026 a las 9:00 a. m.

SE LEVANTA LA SESIÓN

27. Se Levanta la Sesión

MINUTES

MEETING OF THE SAN DIEGO METROPOLITAN TRANSIT SYSTEM

BOARD OF DIRECTORS

June 18, 2026

[Clerk's note: Except where noted, public, staff and board member comments are paraphrased. The full comment can be heard by reviewing the recording at the MTS website.]

1. Roll Call

Chair Whitburn called the Board meeting to order at 9:07 a.m. A roll call sheet listing Board member attendance is attached as Attachment A.

2. Public Comment

Javier Haros – provided a written statement to the Board prior to the meeting. The written comment is provided in the June 18, 2026 Final Meeting Packet.

CONSENT ITEMS:

3. Approval of Minutes

Action would approve the May 21, 2026 Board of Directors meeting minutes and the June 11, 2026 Board Workshop minutes.

4. CEO Report

5. On-Call Job Order Contracting (JOC) General Civil Construction Services – Contract Award

Action would authorize the Chief Executive Officer (CEO) to execute MTS Doc. No. PWG457.0-26, with ABC General Contractor, Inc. (ABCGC), for on-call general civil construction services, to not exceed the statutory JOC limits under Public Contract Code Section 20128.5, calculated to be in the amount of $6,576,000.00, for one (1) year beginning July 1, 2026.

6. On-Call Job Order Contracting (JOC) Railroad Construction Services – Contract Award

Action would authorize the Chief Executive Officer (CEO) to execute MTS Doc. No. PWL456.0-26, with Domestic Rail Solutions (DRS), for on-call railroad construction services, to not exceed the statutory JOC limits under Public Contract Code Section 20128.5, calculated to be in the amount of $6,576,000.00, for one (1) year beginning July 1, 2026.

7. Orange Line (OL) Phase 2 Construction Services – Contract Award

Action would authorize the Chief Executive Officer (CEO) to execute MTS Doc. No. PWL445.0-25, to Balfour Beatty Infrastructure, Inc. (Balfour) for the OL Phase 2 Construction Services in the amount of $58,397,969.61, plus a 10% contingency for change orders administered by the CEO, for a total of $64,237,766.57.

8. Barracuda Subscription Renewal 3 Year – Contract Award

Action would authorize the Chief Executive Officer (CEO) to execute MTS Doc. No. G3208.0-26, with Datel Systems Incorporated (Datel), for a three-year renewal of Barracuda software and hardware subscription services, in the amount of $262,910.00.

DRAFT

9. Bridge Maintenance, Blue Line South – JOC Work Order Agreement

Action would would authorize the Chief Executive Officer (CEO) to execute Work Order No. MTSJOC347-48 under MTS Doc. PWG347.0-22, with ABC General Contractor, Inc. (ABCGC), in the amount of $272,030.17 for addressing routine repair, maintenance, and housekeeping items noted during the annual bridge inspection report for Blue Line South

10. SAP S/4HANA Cloud Licensing – Contract Award

Action would authorize the Chief Executive Officer (CEO) to execute MTS Doc. No. G3235.0-26 with Carahsoft Software Corp. (Carahsoft), in the amount of $9,975,331.96 for SAP S/4HANA software licensing subscriptions for five (5) years.

11. Darktrace Subscription Renewal 5 Year – Contract Award

Action would authorize the Chief Executive Officer (CEO) to execute MTS Doc. No. G3206.0-26, with Nth Generation Computing, Inc. (Nth), to provide Darktrace subscription renewal, for a contract period of three (3) base years and two (2) 1-year options, in the amount of $1,840,384.40, (inclusive of $7,234.40 sales tax for taxable items as denoted on Attachment B).

12. Fiscal Year (FY) 2026 Audit – Engagement Letter and Interim Audit Results

13. Master Concessionaire Services – Contract Amendment

Action would authorize the Chief Executive Officer (CEO) to execute Amendment No. 2 to MTS Doc. G2653.0-23 with BriceHouse Station, LLC (BriceHouse) related to temporary activations and special event management at the Gaslamp Quarter Trolley Station, Gaslamp Square, and Convention Center Station.

14. Proposed Revisions to Ordinance No. 2 Relating to Proof of Fare Payment by Passengers, Ordinance No. 5 Relating to the Enforcement Authorities of Designated MTS Employees, and Ordinance No. 13 Relating to Prohibited Conduct and Actions on Transit Vehicles, Transit Facilities, Trolley Stations and Bus Stops

Action would 1) Adopt the proposed amendments to Ordinance No. 2 (An Ordinance Requiring Proof of Fare Payment by Passengers Using the San Diego Trolley) Ordinance No. 5 (An Ordinance Relating to the Enforcement Authorities of Designated MTS Employees) and Ordinance No. 13 (An Ordinance Regarding Prohibited Conduct Onboard Transit Vehicles and Prohibited Actions on or About a Transit Facility, Trolley Station or Bus Stop) and 2) Waive the requirements of MTS Board Policy No. 22 “Rules of Procedure for MTS Board of Directors” Sections 22.4.3, stating all ordinances shall be read in full either at the time of introduction or passage (per MTS Board Policy No. 22, unanimous vote of the Board members present is required in order to waive further reading).

15. Proposed Amendments to For-Hire Vehicle Services Regulations within MTS Ordinance No. 11 and MTS Board Policy No. 34

Action would adopt the proposed amendments to Ordinance No. 11 “An Ordinance Providing for the Licensing and the Regulating of Transportation Services Within the City and County by the Adoption of a Uniform Paratransit Ordinance” and revisions to Board Policy No. 34 “For-Hire Vehicle Services”.

16. PRONTO Extend Pilot Program – Pilot Extension

Action would approve an extension of the PRONTO Extend Pilot Program until June 30, 2029.

17. Operations Budget Status Report for April 2026

18. Microsoft Volume License Agreement (VLA) – Contract Award

Action would authorize the Chief Executive Officer (CEO) to execute MTS Doc. No. G3209.0-26, with Insight Public Sector, Inc. (Insight), in the amount of $1,831,320.24 for the provision of Microsoft software licensing subscriptions, support, and estimated as-needed licensing and support for three (3) years.

Public Comment:

Blair Beekman – provided a verbal statement to the Board during the meeting. Blair noted that he raised his hand to provide a non-agenda public comment but stated that the Clerk of the Bord moved too quickly and did not see that his hand was raised. He concluded by expressing his appreciation for the work that MTS performed, and he hoped that good decisions would be made in the coming days.

Board Comment for Item 15

Chair Whitburn noted that consent item 15, Proposed Amendments to For-Hire Vehicle Services Regulations within MTS Ordinance No. 11 and MTS Board Policy No. 34, will be pulled from the consent agenda and brought back to the Board at the July 30, 2026 Board meeting.

Action on Recommended Consent Items 3 to 14 and 16 to 18

Board Member Montgomery Steppe moved to approve Consent Agenda Item Nos. 3 to 14 and 16 to 18. Board Member Downey seconded the motion, and the vote was 13 to 0 in favor with Board Member Bush, and Board Member Vaus absent.

[Clerk's note: Board Member Leyba-Gonzalez recused himself from consent items 5 and 7]

DISCUSSION ITEMS:

19. Public Hearing: Assembly Bill (AB) 2561 (McKinnor): Status of Vacancies, Recruitment and Retention (Thuy Nguyen)

Thuy Nguyen, MTS Manager of Talent Acquisition, presented on Public Hearing: Assembly Bill (AB) 2561 (McKinnor): Status of Vacancies, Recruitment and Retention. She presented on: overview of AB 2561, current vacancy rates by bargaining unit, most challenging positions to fill, common staffing challenges across classifications, and recruitment and retention efforts.

Public Comment

Blair Beekman – provided a verbal statement to the Board during the meeting. Blair thanked staff for the presentation. He noted that Oakland is experiencing a budget deficit similar to that of MTS and was considering reductions to employee health insurance and retirement benefits. He mentioned that budget cuts can be implemented in a manner that would minimize negative impacts on both transit service and workers.

Board Comment

There were no Board Comments.

Action Taken

No action taken. Informational item only.

20. Public Hearing: Fiscal Year (FY) 2027 Operating Budget Discussion (Gordon Meyer)

Gordon Meyer, MTS Manager of Financial Planning, presented on Public Hearing: Fiscal Year (FY) 2027 Operating Budget Discussion. He presented on: Fiscal Year 2027 Operating Budget overview, revenue assumptions, revenue summary, service levels, expense assumptions – personnel, expense summary consolidated revenues less expenses, 5-year forecast, and staff recommendation.

Public Comment

Blair Beekman – provided a verbal statement to the Board during the meeting. Blair thanked staff and the Board for considering a delay in fare increases for seniors and persons with disabilities. He stated that a $2 fare increase is more practical than $5 increase. He also suggested that it would be helpful to review the projected revenue totals associated with all proposed fare increases, excluding those applicable to persons with disabilities.

Board Comment

Vice Chair Goble thanked staff for the comprehensive report and requested that staff provide a mid-year budget update in September rather than the usual December or January timeframe. He stated that by then the outcome of the San Diego Association of Governments (SANDAG) fare increase vote would be known and could be reflected on the budget update. Vice Chair Goble added that staff would also have information regarding any budget impacts resulting from the fare freeze program, if applicable. He stated that he believed a fare increase was reasonable, noting that fares had not been increased since 2007 and expressed his hope that the SANDAG Transportation Committee would approve the proposed fare increase. Vice Chair Goble further remarked that trash collection fees were increasing by 4% and that such increases were fair when associated with services being provided and subject to public consideration. He reiterated his request for a September mid-year budget update so the Board could better understand the financial impact of the SANDAG Transportation Committee's decision on the proposed fare increases.

Board Member Hall noted that other companies including San Diego Gas & Electric (SDG&E) were increasing their rates. He noted that rate increases were not something consumers wanted to hear but stated that such increases were often a necessary reality for organizations seeking to maintain operations and remain financially sustainable.

Board Member Elo-Rivera thanked staff for the presentation and noted the many robust conversations that had taken place. He expressed appreciation for both staff and the Board for their efforts and support in protecting the most vulnerable riders from the impacts of the fare increase. Board Member Elo-Rivera stated that he is looking forward to the upcoming conversations leading up to September and to receiving updates on the fare freeze program.

Board Member Downey discussed challenges that the Public Utilities Commission had encountered in previous years when increasing rates while seeking to minimize impacts on the most vulnerable customers. She noted that a significant challenge had been determining which individuals qualified as low income without requiring personal financial information. Board Member Downey stated she looks forward to staff's updated presentation in September. She expressed interest in understanding how staff would determine eligibility for the new fare freeze

program based on participation in the three California assistance programs and how the process would align with the existing calculation used to determine eligibility for current reduced-fare programs.

Board Member Montgomery Steppe reported that following the Board meeting last week, her staff and the County's Health and Human Services Agency had been working with MTS staff to obtain the necessary data to determine how many riders were currently enrolled in CalFresh, Medi-Cal and CalWORKS.

Board Member Moreno thanked staff for the presentation and their continued support throughout the budget cycle. She stated that the projected FY 2027 ridership of 83 million riders, noting the important role public transit plays in reducing congestion, achieving climate goals and promoting transit use throughout the region. Board Member Moreno expressed the urgency of exploring the use of major corridor funds to support MTS, noting that concept originated during the SANDAG retreat in March. She stated that while the proposal had not yet been fully developed by the Board, she wanted to know whether staff were considering the request. Board Member Moreno added that although the effort would require significant work, it was worth pursuing and stated that she would not support a fare increase. Board Member Moreno suggested establishing a Budget Development Committee to assist with the budget process and address the challenges posed by the agency's fiscal cliff. She also recommended holding a strategic Board retreat, similar to SANDAG's, to encourage Board engagement, improve understanding of funding issues, and develop actionable strategies. Board Member Moreno noted that five of the twelve peer agencies discussed during last week's workshop were pursuing or had implemented revenue measures. She emphasized that if the Board intended to pursue a revenue measure, it needed to begin preparations immediately through strategic planning, groundwork, and clear action steps, recognizing that the process could take several years. Board Member Moreno also encouraged the Board to strengthen its engagement with state, local and federal legislators. She noted that many peer transit agencies benefit from both tax revenues and substantial federal subsidies and urged the Board to pursue closer relationships with elected officials to support the agency's long term funding needs.

Board Member Bush thanked staff and leadership for being responsive with the comments and direction provided by the Board in the previous meetings. He stated that he supported the motion, noting that it was in a much better position as a result of those revisions. He agreed with Board Member Moreno's recommendations to reinstate the Budget Development Committee, hold a Board retreat and explore the use of corridor funds. Board Member Bush proposed that the Budget Development Committee be established as a separate committee rather than as part of the Executive Committee and requested clarification for reinstating it. Chair Whitburn explained that the committees are selected at the end of the year. Ms. Cooney added that the appointments to the Ad Hoc Nominating Committee typically occur around November, with the first meeting generally held between December and January. Chair Whitburn stated that the Board would begin the process in November and that the structure of a separate Budget Development Committee and retreat could be discussed at that time. Board Member Bush expressed a preference for establishing a separate Budget Development Committee before November, noting that significant budget discussion would take place between then and September. He requested feedback from the Board on his recommendation.

Vice Chair Goble explained that the Budget Development Committee had not been dissolved but had instead been absorbed into the Executive Committee because the same Board Members who requested to serve on the Budget Development Committee were also serving on

the Executive Committee. He stated that, in the Fall, the Board would again seek volunteers for both committees, which could result in the committees operating separately rather than being combined as they are currently. Board Member Bush thanked Vice Chair Goble for the clarification and stated that, with a better understanding of the committee structure, he would now recommend that the Budget Development Committee meet prior to the September Board meeting to review and analyze the fare freeze program with staff.

Chair Whitburn reiterated that the Budget Development Committee and the Executive Committee were currently operating as the same committee. He stated that if committee members wished to meet twice per month rather than once per month, that option could be discussed at a future Executive Committee/Budget Development Committee meeting. Ms. Cooney added that an Executive Committee/Budget Development Committee was scheduled for Thursday, September 10, 2026, and that the meeting would provide an opportunity for the committee to discuss potential amendments to the FY27 budget. Board Member Bush thanked Ms. Cooney for the clarification and stated that it addressed his concerns regarding the Budget Development Committee separately to review issues in greater detail. He noted that having the committee discuss matters and provide feedback to both the Board and staff at a smaller committee level before bringing a recommendation back to the full Board would be beneficial.

Board Member McCann stated that, although he did not currently serve on the Executive Committee, he was interested in serving on the Budget Development Committee. He noted that he had previously served on the Budget Development Committee and expressed his interest in participating in the committee's work going forward.

Board Member Moreno emphasized that Chair Whitburn and Vice Chair Goble had the responsibility to lead the agency, including determining how committees should operate. She reiterated her request that the Budget Development Committee be reestablished as a separate committee from the Executive Committee and asked that her position be reflected in the record.

Board Member Bush stated that he agrees with Board Member Moreno's comments and supported establishing the Budget Development Committee as a separate committee from the Executive Committee.

Action Taken

Vice Chair Goble moved to 1) Receive testimony, review, and comment on the FY 2027 MTS Operating Budget at a public hearing; and 2) Enact Resolution 26-08 (in substantially the same format as Attachment B) adopting the FY 2027 operating budget for the MTS, San Diego Transit Corporation (SDTC), San Diego Trolley (SDTI), San Diego & Arizona Eastern Railway Co. (SDAE), MTS Contract Services, and the Coronado Ferry. Board Member Hall seconded the motion, and the vote was 12 in favor (Board Member Downey, Board Member Fernandez, Board Member Foster, Board Member Mendoza, Board Member Bush, Board Member Leyba-Gonzalez, Board Member Montgomery Steppe, Board Member Dillard, Board Member Elo-Rivera, Chair Whitburn, Vice Chair Goble, Board Member Moreno) to 2 opposed (Board Member McCann, Board Member Hall), with Board Member Vaus absent.

[Clerk's note: Board Member Hall seconded the motion and recorded his vote as a "No" on the item. The vote did not record on the Televic tablet and was confirmed verbally.]

21. Annual Safety Performance Review and Approval of Updated Agency Safety Plan (Fabeann Soberg and Jared Garcia)

Fabeann Soberg, MTS System Safety Manager, and Jared Garcia, MTS Manager of Safety, presented on the Annual Safety Performance Review and Approval of Updated Agency Safety Plan. They presented on: Trolley: Public Transportation Agency Safety Plan (PTASP), 2024 California Public Utilities Commission (CPUC) Triennial Audit, 2025 Internal Safety & Security Audit (ISSA), safety performance measures, statewide rail accidents, accident prevention campaign, hostile threat/active assailant SDTI yards and maintenance facilities (S.O.P), ECDP Swat Team, FTA Transportation Safety Institute (TSI), Flagperson Appreciation Day, Bus: Bus performance measures; facilities, major events, injuries, system reliability, bus event types & preventability, fixed route preventable accidents, rapid preventable accidents, CHP annual terminal inspections, Bus – Employee Safety & Service Awards, APTA Gold Safety Award 2026, updates to risk reduction program, updates to agency safety plan, and staff recommendation.

Public Comment

Blair Beekman – provided a verbal statement to the Board during the meeting. Blair expressed concerns regarding customer service interactions between Trolley operators and riders, suggesting that communication with the public could be improved. He also encouraged greater transparency and public discussion regarding the use of biometric technology in transit systems, emphasizing the need for clear guidelines distinguishing health related applications from security and surveillance uses.

Board Comment

Board Member Bush thanked staff for the presentation and commended the team and leadership for their work. He noted that safety initiatives have budgetary benefits by reducing liability exposure and stated that seeing where MTS ranked in relation to statewide rail accidents was impactful and a point of pride for the agency.

Board Member Elo-Rivera thanked staff for the presentation and, more importantly, for their ongoing work. He commended the agency's strong safety performance and noted the importance of maintaining high safety standards for both operational and financial reasons. Board Member Elo-Rivera requested that a future discussion included consideration of partially closing the transit system at some of the busiest Trolley stations. He suggested that a partially closed system could potentially improve fare recovery, enhance riders' sense of safety, and help reduce incidents while building upon the agency's existing safety performance. Ms. Cooney stated that the Planning department was actively evaluating MTS stations to identify locations that may be suitable for a partially closed system. She noted that staff had also been consulting with peer agencies, including St. Louis, where several light rail stations had recently been enclosed. Ms. Cooney explained that staff was reviewing those agencies' experiences and best practices as part of the analysis and continued to work toward developing potential implementation options for MTS.

Board Member Elo-Rivera thanked Ms. Cooney for the update and emphasized that any future discussion regarding a partially closed transit system should include a review of the potential safety benefits in addition to fare enforcement and revenue recovery considerations. He reiterated that safety remained that agency's highest priority and noted that San Francisco had also implemented elements of a partially closed transit system that could be considered as part of the analysis. Ms. Cooney noted that several transit agencies, including LA Metro and Bay Area Rapid Transit (BART), had implemented partially closed systems. She explained that

many agencies had moved in that direction not only to improve fare compliance and revenue recovery but also to enhance safety and reduce incidents occurring within stations. Ms. Cooney added that these benefits were among the factors staff was considering as part of its ongoing evaluation.

Karen Landers, MTS General Counsel, added that the topic of implementing a partially closed transit system could be discussed further through the Public Security Committee, subject to the committee Chair's approval. She noted that the committee's subject matter expertise would make it an appropriate venue for reviewing the analysis and providing feedback as staff continued its evaluation.

Board Member Montgomery Steppe thanked staff for the presentation and update, noting that the agency's strong safety performance was a direct result of staff's effort and dedication. She commended employees for their work in achieving the positive safety outcome reflected in the report. Board Member Montgomery Steppe then asked staff to explain the system factors used to determine and measure system reliability.

Mr. Garcia explained that the four primary factors that influence system reliability are fleet age, vehicle length, fuel type and service type. Ms. Cooney explained that system reliability is defined by the FTA, which requires transit agencies to report performance statistics using a standardized methodology. She stated that under the FTA's definition, system reliability is measured by the distance traveled between major mechanical failures, ensuring consistency in how reliability is evaluated and compared across transit agencies.

Michael Wygant, MTS Chief Operating Officer, explained that several factors contribute to variations in system reliability. He stated that reliability is commonly measured by the number of vehicle failures per mile or revenue hour and can be evaluated using multiple metrics. Mr. Wygant noted that larger vehicles, such as 60-foot articulated buses, typically experience higher failure rates than 40-foot buses because they carry more weight and contain additional components that can fail. He added that average route speed is also a significant factor, as vehicles operating in stop and go urban environments generally experience greater wear and higher failure rates than those operating at higher, consistent speeds. Mr. Wygant explained that propulsion technology influences reliability, noting that while battery electric buses have performed well, their failure rates have begun to increase more rapidly as the vehicles aged compared to CNG powered buses.

Board Member Montgomery Steppe inquired whether the baseline for the rail reliability chart had changed significantly over the years. She also commented on the discussion regarding partially closing portions of the transit system and stated that she supports further review of the topic through the Public Security Committee. Board Member Montgomery Steppe emphasized that the discussion should not be siloed and should include input from Planning staff and other relevant departments. She stressed the importance of taking a holistic, cross-functional approach to evaluating any potential changes.

Action Taken

Board Member Bush moved that the San Diego Metropolitan Transit System (MTS) Board of Directors approve updates to the Public Transportation Agency Safety Plan (PTASP). Board Member Dillard seconded the motion, and the vote was 14 to 0 in favor with Board Member Vaus absent.

22. Fiscal Year (FY) 2026 Q3 Performance Monitoring Report (Brent Boyd and Matthew Grace)

Brent Boyd, MTS Director of Planning & Scheduling, and Matthew Grace, MTS Transit Services Data Analyst, presented on Fiscal Year (FY) 2026 Q3 Performance Monitoring Report. They presented on: Board Policy 42, policy 42 evaluation criteria, total ridership by quarter, overall ridership trends, National transit ridership trends, Southern California transit ridership trends, passengers per revenue hour, on-time performance, and financial metrics.

Public Comment

Blair Beekman – provided a verbal statement to the Board during the meeting. Blair thanked the Board for its work and referenced examples from Bay Area transit agencies as the agency considered future service and funding challenges. He expressed support for maintaining transit services while keeping fares affordable and thanked the Board and staff for their efforts to preserve quality service.

Board Comment

There were no Board Comments.

Action Taken

No action taken. Informational item only.

OTHER ITEMS:

23. Chair, Board Member and Chief Executive Officer's (CEO's) Communications

Ms. Cooney provided a legislative update regarding the State budget and the Greenhouse Gas Reduction Fund programs that support transit. She reported that despite significant advocacy efforts, CARB had advanced changes that could prioritize other funding interests ahead of transit programs. Ms. Cooney noted that negotiations between legislative leadership and the Governor were ongoing and emphasized the importance of continued advocacy to protect funding sources critical to MTS, including SB 125, the Affordable Housing and Sustainable Communities (AHSC) Program, the Transit and Intercity Rail Capital Program (TIRCP), and zero-emission vehicle programs. She encouraged Board Members to engage with state legislators, particularly local representatives, to help convey the importance of preserving these funding programs and referred Board Members to additional information provided in her email update.

Board Member Hall noted that Assembly Member Chris Ward would be attending an event in East County on June 26, 2026. He suggested that it may be advantageous for several Board Members to attend the event.

Board Member Leyba-Gonzalez announced upcoming community events in Imperial Beach, Taste of IB being held that evening, a 70th anniversary celebration was scheduled at the Pier Plaza, and the annual Pow Wow would take place over the weekend. He encouraged attendees traveling through the area to visit Imperial Beach and enjoy the community's events and coastal amenities.

Board Member Downey thanked MTS, Caltrans, and partner agencies for their efforts to manage traffic and transportation impacts associated with the NASCAR weekend event. She noted that residents had been encouraged to avoid unnecessary travel during the event and

expressed appreciation for the coordination taking place to minimize disruptions. Board Member Downey also referenced the recent SANDAG Transportation Committee meeting where the fare increase was considered. She noted that SANDAG staff had clarified and acknowledged that MTS is one of the most efficient transit systems in California. She stated that prior concerns regarding efficiency metrics and TransNet funding eligibility had been addressed and approved. Board Member Downey emphasized the importance of this recognition as the agency continues to pursue future funding opportunities and demonstrate its strong operational performance. Chair Whitburn thanked Board Member Downey for her advocacy and efforts in defending MTS's reputation.

Board Member McCann invited Board Members and the public to attend the San Diego FC soccer celebration taking place later that day in Chula Vista. He highlighted the scheduled matches and evening entertainment and thanked MTS for its assistance in helping attendees access the event. Board Member McCann encouraged community members to participate in the free celebration.

Board Member Montgomery Steppe announced that the County Administration Building would be hosting a Juneteenth flag-raising ceremony at 1:30 p.m. She noted the significance of Juneteenth as a commemoration of the emancipation of the last enslaved people in the United States and highlighted its importance during the nation's 250th anniversary observance.

Board Member Mendoza announced that the City of Lemon Grove would be hosting a Juneteenth flag-raising ceremony that afternoon at City Hall, located near the downtown Trolley station, followed by a free community celebration at the park. She also shared a recent experience using the Trolley, where she assisted a rider who did not speak English with purchasing a ticket. While she found the ticket machine easy to use, she suggested that staff consider ways to make ticket purchasing instructions more accessible for riders who speak other languages, noting the importance of serving the region's diverse transit users.

Remainder of Public Comments Not on The Agenda

Marchelle – provided a verbal statement to the Board during the meeting. Marchelle expressed appreciation for MTS and the Route 910 Express, commending bus operators for their professionalism and dedication. She also shared positive experiences with the transit system and thanked MTS emergency responders for assisting her during a recent medical incident.

Javier Haros – provided a verbal statement to the Board during the meeting. Javier requested an update on the pedestrian access closure proposal for the H Street Trolley Station, citing ongoing safety and quality of life concerns. He noted that residents had continued to gather community support and develop a proposal to improve security while maintaining station access, including a homeowner funded secured pedestrian gate subject to MTS approval.

24. Next Meeting Date

The next regularly scheduled Board meeting is July 30, 2026 at 9:00 a.m.

CLOSED SESSION:

25. Public Comment for Closed Session

There were no Public Comments.

Closed Session Convened

The Board convened to Closed Session at 10:58 a.m.

26. Closed Session – Conference with Legal Counsel – Existing Litigation Pursuant to California Government Code Section 54956.9(d)(1)
Katherine Noia v. San Diego Metropolitan Transit System, et al.
SDSC Case No. 25CU019084C (Dept C-74, Hon. Blaine Bowman)

Closed Session Reconvening

The Board reconvened to Open Session at 11:09 a.m.

Karen Landers, General Counsel, reported the following oral report of final actions taken in Closed Session:

The Board received a report and gave instructions to legal counsel.

ADJOURNMENT

The next regularly scheduled Board meeting is July 30, 2026 at 9:00 a.m.

27. Adjournment

The meeting was adjourned at 11:10 a.m.

Chairperson
San Diego Metropolitan Transit System

Filed by:

Clerk of the Board
San Diego Metropolitan Transit System

Approved as to form:

General Counsel
San Diego Metropolitan Transit System

Attachment: A. Roll Call Sheet

SAN DIEGO METROPOLITAN TRANSIT SYSTEM
BOARD OF DIRECTORS
ROLL CALL

MEETING OF (DATE):	June 18, 2026	CALL TO ORDER (TIME):	9:07 a.m.
RECESS:		RECONVENE:	
CLOSED SESSION:	10:59 a.m.	RECONVENE:	11:09 a.m.
ORDINANCES ADOPTED:		ADJOURN:	11:10 a.m.

JURISDICTION	BOARD MEMBER		ALTERNATE		PRESENT (TIME ARRIVED)	ABSENT (TIME LEFT)
City of Chula Vista	Cesar Fernandez	☒	Jose Preciado	☐	9:07 a.m.	11:10 a.m.
City of Chula Vista	John McCann	☒	Jose Preciado	☐	9:07 a.m.	11:10 a.m.
City of Coronado	Carrie Downey	☒	Mark Fleming	☐	9:07 a.m.	11:10 a.m.
County of San Diego	Monica Montgomery Steppe	☒	Paloma Aguirre	☐	9:07 a.m.	11:10 a.m.
City of El Cajon	Steve Goble (Vice-Chair)	☒	Phil Ortiz	☐	9:07 a.m.	11:10 a.m.
City of Imperial Beach	Matthew Leyba-Gonzalez	☒	Mariko Nakawatase	☐	9:07 a.m.	11:10 a.m.
City of La Mesa	Patricia Dillard	☒	Mark Arapostathis	☐	9:07 a.m.	11:10 a.m.
City of Lemon Grove	Jennifer Mendoza	☒	Seth Smith	☐	9:07 a.m.	11:10 a.m.
City of National City	Marcus Bush	☒	Jose Rodriguez	☐	9:25 a.m.	11:10 a.m.
City of Poway	Steve Vaus	☐	Peter De Hoff	☐	ABSENT	ABSENT
City of San Diego	Vivian Moreno	☒	Jennifer Campbell	☐	9:07 a.m.	11:10 a.m.
City of San Diego	Sean Elo-Rivera	☒	Joe LaCava	☐	9:07 a.m.	11:10 a.m.
City of San Diego	Todd Gloria	☐	Henry Foster	☒	9:07 a.m.	11:10 a.m.
City of San Diego	Stephen Whitburn (Chair)	☒	Kent Lee	☐	9:07 a.m.	11:10 a.m.
City of Santee	Ronn Hall	☒	Laura Koval John Minto	☐ ☐	9:07 a.m.	11:10 a.m.

SIGNED BY THE CLERK OF THE BOARD: /s/ Lucia Mansour

Metropolitan Transit System

Agenda Item No. 04

MEETING OF THE SAN DIEGO METROPOLITAN TRANSIT SYSTEM
BOARD OF DIRECTORS

July 30, 2026

SUBJECT:

Chief Executive Officer's (CEO) Report

INFORMATIONAL

CONTRACTS (since last Board meeting)

In accordance with Board Policy No. 52, "Procurement of Goods and Services", attached are listings of contracts, purchase orders, and work orders that have been approved within the CEO's authority (up to and including $150,000) for the period June 11, 2026 – July 22, 2026.

CEO TRAVEL REPORT (since last Board meeting)

June 29, 2026 – California Transit Association (CTA) Executive Committee Meeting (Sacramento, CA)

BOARD MEMBER TRAVEL REPORT (since last Board meeting) - Gov Code 53232.3(d)

Henry Foster – June 28, 2026 to July 1, 2026 American Public Transportation Association (APTA) Rail Conference (Baltimore, MD)

Marcus Bush - June 28, 2026 to July 1, 2026 American Public Transportation Association (APTA) Rail Conference (Baltimore, MD)

Monica Montgomery Steppe - June 28, 2026 to July 1, 2026 American Public Transportation Association (APTA) Rail Conference (Baltimore, MD)

Patricia Dillard - June 28, 2026 to July 1, 2026 American Public Transportation Association (APTA) Rail Conference (Baltimore, MD)

Attachments: A. Purchase Orders
B. Expense and Revenue Contracts/Right of Entry Permits/MOUs

Purchase Orders							
PO Number	PO Date	Name	Prime Business Certification	Material Group	PO Value	DBE Subcontracted Amount	Non DBE Subcontracted Amount
4400003900	6/12/2026	ODP Business Solutions, LLC		G200-OFFICE SUPPLIES	$ 7.10	$ -	$ -
4400003901	6/15/2026	ODP Business Solutions, LLC		G200-OFFICE SUPPLIES	$ 26.33	$ -	$ -
4400003902	6/16/2026	W.W. Grainger Inc		G130-SHOP TOOLS	$ 341.49	$ -	$ -
4400003903	6/16/2026	Mcmaster-Carr Supply Co		G150-FASTENERS	$ 65.73	$ -	$ -
4400003904	6/16/2026	W.W. Grainger Inc		F170-MATL HANDLING EQUIP	$ 168.30	$ -	$ -
4400003905	6/16/2026	Mcmaster-Carr Supply Co		G150-FASTENERS	$ 68.46	$ -	$ -
4400003906	6/17/2026	ODP Business Solutions, LLC		G200-OFFICE SUPPLIES	$ 341.59	$ -	$ -
4400003907	6/17/2026	Mcmaster-Carr Supply Co		G150-FASTENERS	$ 74.36	$ -	$ -
4400003908	6/17/2026	Mcmaster-Carr Supply Co		R150-RAIL/LRV COMM EQUIP	$ 358.75	$ -	$ -
4400003909	6/19/2026	W.W. Grainger Inc		G130-SHOP TOOLS	$ 93.20	$ -	$ -
4400003910	6/25/2026	ODP Business Solutions, LLC		G200-OFFICE SUPPLIES	$ 233.19	$ -	$ -
4400003911	6/25/2026	ODP Business Solutions, LLC		G200-OFFICE SUPPLIES	$ 128.53	$ -	$ -
4400003912	6/25/2026	ODP Business Solutions, LLC		G200-OFFICE SUPPLIES	$ 198.12	$ -	$ -
4400003913	6/25/2026	W.W. Grainger Inc		G140-SHOP SUPPLIES	$ 140.16	$ -	$ -
4400003914	6/25/2026	Mcmaster-Carr Supply Co		G150-FASTENERS	$ 223.23	$ -	$ -
4400003915	6/26/2026	W.W. Grainger Inc		G130-SHOP TOOLS	$ 538.36	$ -	$ -
4400003916	6/26/2026	ODP Business Solutions, LLC		G200-OFFICE SUPPLIES	$ 277.96	$ -	$ -
4400003917	6/29/2026	ODP Business Solutions, LLC		G200-OFFICE SUPPLIES	$ 41.12	$ -	$ -
4400003918	6/29/2026	ODP Business Solutions, LLC		G200-OFFICE SUPPLIES	$ 131.39	$ -	$ -
4400003919	6/29/2026	W.W. Grainger Inc		G130-SHOP TOOLS	$ 102.04	$ -	$ -
4400003920	6/30/2026	Mcmaster-Carr Supply Co		G130-SHOP TOOLS	$ 90.44	$ -	$ -
4400003921	7/1/2026	ODP Business Solutions, LLC		G200-OFFICE SUPPLIES	$ 733.97	$ -	$ -
4400003922	7/2/2026	ODP Business Solutions, LLC		G200-OFFICE SUPPLIES	$ 365.42	$ -	$ -
4400003923	7/2/2026	ODP Business Solutions, LLC		G200-OFFICE SUPPLIES	$ 518.43	$ -	$ -
4400003924	7/2/2026	ODP Business Solutions, LLC		G200-OFFICE SUPPLIES	$ 1,696.00	$ -	$ -
4400003925	7/2/2026	ODP Business Solutions, LLC		G200-OFFICE SUPPLIES	$ 267.66	$ -	$ -
4400003926	7/7/2026	W.W. Grainger Inc		G270-ELECTRICAL/LIGHTING	$ 75.93	$ -	$ -
4400003927	7/7/2026	Mcmaster-Carr Supply Co		G130-SHOP TOOLS	$ 67.64	$ -	$ -
4400003928	7/9/2026	W.W. Grainger Inc		T110-TRACK, RAIL	$ 190.24	$ -	$ -
4400003929	7/9/2026	Mcmaster-Carr Supply Co		G150-FASTENERS	$ 329.16	$ -	$ -
4400003930	7/9/2026	ODP Business Solutions, LLC		G200-OFFICE SUPPLIES	$ 45.51	$ -	$ -
4400003931	7/9/2026	ODP Business Solutions, LLC		G200-OFFICE SUPPLIES	$ 335.17	$ -	$ -
4400003932	7/10/2026	Mcmaster-Carr Supply Co		G130-SHOP TOOLS	$ 65.16	$ -	$ -
4400003933	7/13/2026	W.W. Grainger Inc		G190-SAFETY/MED SUPPLIES	$ 299.85	$ -	$ -
4400003934	7/14/2026	ODP Business Solutions, LLC		G200-OFFICE SUPPLIES	$ 26.78	$ -	$ -
4400003935	7/14/2026	W.W. Grainger Inc		G130-SHOP TOOLS	$ 1,405.01	$ -	$ -
4400003936	7/14/2026	ODP Business Solutions, LLC		G200-OFFICE SUPPLIES	$ 194.25	$ -	$ -
4400003937	7/15/2026	Mcmaster-Carr Supply Co		G140-SHOP SUPPLIES	$ 54.05	$ -	$ -
4400003938	7/15/2026	ODP Business Solutions, LLC		G200-OFFICE SUPPLIES	$ 394.15	$ -	$ -
4400003939	7/15/2026	W.W. Grainger Inc		G270-ELECTRICAL/LIGHTING	$ 93.92	$ -	$ -
4400003940	7/16/2026	W.W. Grainger Inc		G270-ELECTRICAL/LIGHTING	$ 462.58	$ -	$ -
4400003941	7/16/2026	Mcmaster-Carr Supply Co		G150-FASTENERS	$ 77.63	$ -	$ -
4400003942	7/16/2026	ODP Business Solutions, LLC		G200-OFFICE SUPPLIES	$ 13.94	$ -	$ -

4400003943	7/16/2026	W.W. Grainger Inc		G130-SHOP TOOLS	$ 73.22	$ -	$ -
4400003944	7/16/2026	W.W. Grainger Inc		G130-SHOP TOOLS	$ 636.55	$ -	$ -
4400003945	7/16/2026	W.W. Grainger Inc		G130-SHOP TOOLS	$ 215.28	$ -	$ -
4400003946	7/17/2026	Mcmaster-Carr Supply Co		G130-SHOP TOOLS	$ 2,279.42	$ -	$ -
4400003947	7/18/2026	ODP Business Solutions, LLC		G200-OFFICE SUPPLIES	$ 67.75	$ -	$ -
4400003948	7/22/2026	Mcmaster-Carr Supply Co		G130-SHOP TOOLS	$ 177.49	$ -	$ -
4400003949	7/22/2026	ODP Business Solutions, LLC		G200-OFFICE SUPPLIES	$ 55.28	$ -	$ -
4400003950	7/22/2026	W.W. Grainger Inc		G130-SHOP TOOLS	$ 2,442.95	$ -	$ -
4400003951	7/22/2026	W.W. Grainger Inc		G130-SHOP TOOLS	$ 342.70	$ -	$ -
4500075900	6/11/2026	Blue Angel International LLC	Small Business	G170-LUBRICANTS	$ 204.81	$ -	$ -
4500075901	6/11/2026	County of San Diego		P130-EQUIP MAINT REPR SVC	$ 355.71	$ -	$ -
4500075902	6/11/2026	Ahlee Backflow Service, Inc	Small Business	F110-SHOP/BLDG MACHINERY	$ 243.00	$ -	$ -
4500075903	6/11/2026	Prochem Specialty Products Inc	Small Business	G180-JANITORIAL SUPPLIES	$ 1,955.67	$ -	$ -
4500075904	6/11/2026	Cummins Inc		B200-BUS PWR TRAIN EQUIP	$ 80.39	$ -	$ -
4500075905	6/11/2026	Waxie's Enterprises, LLC		G180-JANITORIAL SUPPLIES	$ 959.40	$ -	$ -
4500075906	6/11/2026	Transit Holdings Inc		B140-BUS CHASSIS	$ 5,264.01	$ -	$ -
4500075907	6/11/2026	Transit Holdings Inc		B140-BUS CHASSIS	$ 7,072.25	$ -	$ -
4500075908	6/11/2026	Signal Hill Auto Enterprises, Inc.		G180-JANITORIAL SUPPLIES	$ 701.46	$ -	$ -
4500075909	6/11/2026	VSI Technologies Inc	Woman Owned Business	G190-SAFETY/MED SUPPLIES	$ 1,400.75	$ -	$ -
4500075910	6/11/2026	W.W. Grainger Inc		F110-SHOP/BLDG MACHINERY	$ 131.09	$ -	$ -
4500075911	6/11/2026	R.S. Hughes Co Inc		G140-SHOP SUPPLIES	$ 33.84	$ -	$ -
4500075912	6/11/2026	R.S. Hughes Co Inc		G140-SHOP SUPPLIES	$ 678.26	$ -	$ -
4500075913	6/11/2026	Waxie's Enterprises, LLC		G140-SHOP SUPPLIES	$ 228.22	$ -	$ -
4500075914	6/11/2026	Mcmaster-Carr Supply Co		B120-BUS MECHANICAL PARTS	$ 44.16	$ -	$ -
4500075915	6/11/2026	Genfare, LLC		B190-BUS FARE EQUIP	$ 2,425.46	$ -	$ -
4500075916	6/11/2026	Muncie Reclamation and Supply Co		B140-BUS CHASSIS	$ 2,992.84	$ -	$ -
4500075917	6/11/2026	Kurt Morgan		G200-OFFICE SUPPLIES	$ 645.08	$ -	$ -
4500075918	6/11/2026	S&A Systems Inc		B250-BUS REPAIR PARTS	$ 856.62	$ -	$ -
4500075919	6/11/2026	Trentman Corp	Small Business	P280-GENERAL SVC AGRMNTS	$ 3,340.25	$ -	$ -
4500075920	6/11/2026	Molina Manufacturing, Inc.		B130-BUS BODY	$ 1,603.79	$ -	$ -
4500075921	6/11/2026	IDSC Holdings LLC		G130-SHOP TOOLS	$ 2,090.35	$ -	$ -
4500075922	6/11/2026	Molina Manufacturing, Inc.		B130-BUS BODY	$ 4,061.69	$ -	$ -
4500075923	6/11/2026	Harbor Diesel & Equipment, Inc		B250-BUS REPAIR PARTS	$ 688.73	$ -	$ -
4500075924	6/11/2026	Transit Holdings Inc		B250-BUS REPAIR PARTS	$ 659.37	$ -	$ -
4500075925	6/11/2026	Norman Industrial Materials Inc.		G140-SHOP SUPPLIES	$ 2,604.66	$ -	$ -
4500075926	6/11/2026	Clean Diesel Specialists So Cal Inc		B250-BUS REPAIR PARTS	$ 1,533.79	$ -	$ -
4500075927	6/11/2026	Shilpark Paint Corporation		F180-BUILDING MATERIALS	$ 270.19	$ -	$ -
4500075929	6/12/2026	Transit Holdings Inc		B120-BUS MECHANICAL PARTS	$ 5,740.79	$ -	$ -
4500075930	6/12/2026	Transit Holdings Inc		B200-BUS PWR TRAIN EQUIP	$ 342.88	$ -	$ -
4500075931	6/12/2026	Blue Angel International LLC	Small Business	G170-LUBRICANTS	$ 154.99	$ -	$ -
4500075932	6/12/2026	Gillig LLC		B140-BUS CHASSIS	$ 1,358.30	$ -	$ -
4500075933	6/12/2026	Staples Contract & Commercial LLC		G200-OFFICE SUPPLIES	$ 372.38	$ -	$ -
4500075934	6/12/2026	Transit Holdings Inc		B250-BUS REPAIR PARTS	$ 1,026.77	$ -	$ -
4500075935	6/12/2026	RJ International LLC	DBE	G140-SHOP SUPPLIES	$ 1,415.84	$ -	$ -
4500075936	6/12/2026	San Diego Friction Products, Inc.		B120-BUS MECHANICAL PARTS	$ 4,285.22	$ -	$ -
4500075937	6/12/2026	Tribologik Corporation		G140-SHOP SUPPLIES	$ 3,094.01	$ -	$ -
4500075938	6/12/2026	Trolley Support LLC		B130-BUS BODY	$ 3,146.30	$ -	$ -
4500075939	6/12/2026	Shilpark Paint Corporation		G160-PAINTS & CHEMICALS	$ 293.36	$ -	$ -
4500075940	6/12/2026	All Industrial Tool Supply		P130-EQUIP MAINT REPR SVC	$ 1,062.69	$ -	$ -

4500075941	6/12/2026	Railroad Tools & Solutions LLC		T120-TRACK, LUBRICATORS	$ 1,890.41	$ -	$ -
4500075942	6/12/2026	Zachary Taylor	DBE	M140-WAYSIDE SIGNALS	$ 2,575.00	$ -	$ -
4500075943	6/12/2026	Clarran Inc.	DBE	G140-SHOP SUPPLIES	$ 36.84	$ -	$ -
4500075944	6/12/2026	Cembre Inc		M170-IMPEDANCE BOND	$ 4,825.38	$ -	$ -
4500075945	6/12/2026	Muncie Reclamation and Supply Co		B120-BUS MECHANICAL PARTS	$ 133.70	$ -	$ -
4500075946	6/12/2026	W.W. Grainger Inc		G140-SHOP SUPPLIES	$ 115.17	$ -	$ -
4500075947	6/12/2026	Cummins Inc		B200-BUS PWR TRAIN EQUIP	$ 145.35	$ -	$ -
4500075948	6/12/2026	Freeby Signs		B130-BUS BODY	$ 400.29	$ -	$ -
4500075949	6/12/2026	Mohawk Mfg & Supply Co		B130-BUS BODY	$ 130.58	$ -	$ -
4500075950	6/12/2026	Willy's Electronic Supply Co Inc		R150-RAIL/LRV COMM EQUIP	$ 516.99	$ -	$ -
4500075953	6/15/2026	Cembre Inc		M170-IMPEDANCE BOND	$ 586.70	$ -	$ -
4500075954	6/15/2026	Hi-Tec Enterprises		R160-RAIL/LRV ELECTRICAL	$ 533.37	$ -	$ -
4500075955	6/15/2026	Mohawk Mfg & Supply Co		B200-BUS PWR TRAIN EQUIP	$ 279.42	$ -	$ -
4500075956	6/15/2026	Waxie's Enterprises, LLC		G180-JANITORIAL SUPPLIES	$ 569.33	$ -	$ -
4500075957	6/15/2026	Waxie's Enterprises, LLC		G180-JANITORIAL SUPPLIES	$ 1,426.31	$ -	$ -
4500075958	6/15/2026	Transit Holdings Inc		B160-BUS ELECTRICAL	$ 4,850.25	$ -	$ -
4500075959	6/15/2026	Transit Holdings Inc		B120-BUS MECHANICAL PARTS	$ 53.02	$ -	$ -
4500075960	6/15/2026	Transit Holdings Inc		B160-BUS ELECTRICAL	$ 166.12	$ -	$ -
4500075961	6/15/2026	Sway Collective	Disabled Veteran Business	G260-MEDIA	$ 3,200.98	$ -	$ -
4500075962	6/15/2026	Dimensional Silk Screen Inc		G230-PRINTED MATERIALS	$ 475.18	$ -	$ -
4500075963	6/15/2026	TK Services Inc		B250-BUS REPAIR PARTS	$ 3,503.88	$ -	$ -
4500075964	6/15/2026	Dimensional Silk Screen Inc		G230-PRINTED MATERIALS	$ 371.74	$ -	$ -
4500075965	6/15/2026	Siemens Mobility, Inc.		R230-RAIL/LRV MECHANICAL	$ 7,325.00	$ -	$ -
4500075966	6/15/2026	Jamaica Bearings Co Inc		R220-RAIL/LRV TRUCKS	$ 51,957.65	$ -	$ -
4500075968	6/15/2026	Transit Holdings Inc		B250-BUS REPAIR PARTS	$ 3,419.06	$ -	$ -
4500075969	6/15/2026	Vern Rose Inc		B130-BUS BODY	$ 452.20	$ -	$ -
4500075970	6/15/2026	San Diego Hydraulics, Inc.		P210-NON-REV VEH REPAIRS	$ 1,252.20	$ -	$ -
4500075971	6/15/2026	All Industrial Tool Supply		P210-NON-REV VEH REPAIRS	$ 583.63	$ -	$ -
4500075972	6/15/2026	Inland Kenworth (US) Inc		B250-BUS REPAIR PARTS	$ 35.10	$ -	$ -
4500075973	6/15/2026	Clarran Inc.	DBE	G150-FASTENERS	$ 199.02	$ -	$ -
4500075974	6/15/2026	2BFueled LLC		A120-AUTO/TRUCK GASOLINE	$ 15,256.91	$ -	$ -
4500075975	6/15/2026	Southern Counties Lubricants LLC		G170-LUBRICANTS	$ 10,100.76	$ -	$ -
4500075976	6/15/2026	Mohawk Mfg & Supply Co		B160-BUS ELECTRICAL	$ 128.88	$ -	$ -
4500075977	6/15/2026	Southern Counties Oil Co, LP		A120-AUTO/TRUCK GASOLINE	$ 3,193.47	$ -	$ -
4500075978	6/15/2026	R.S. Hughes Co Inc		G140-SHOP SUPPLIES	$ 2,263.13	$ -	$ -
4500075979	6/16/2026	Transit Holdings Inc		B120-BUS MECHANICAL PARTS	$ 314.09	$ -	$ -
4500075980	6/16/2026	Transit Holdings Inc		B140-BUS CHASSIS	$ 967.68	$ -	$ -
4500075981	6/16/2026	San Diego Friction Products, Inc.		B120-BUS MECHANICAL PARTS	$ 3,951.21	$ -	$ -
4500075982	6/16/2026	Siemens Mobility, Inc.		R120-RAIL/LRV CAR BODY	$ 52,043.25	$ -	$ -
4500075983	6/16/2026	Custom Glass Solutions Fostoria LLC		R120-RAIL/LRV CAR BODY	$ 60,790.40	$ -	$ -
4500075984	6/16/2026	Cummins Inc		B200-BUS PWR TRAIN EQUIP	$ 1,417.46	$ -	$ -
4500075985	6/16/2026	Transit Holdings Inc		B140-BUS CHASSIS	$ 2,394.10	$ -	$ -
4500075986	6/16/2026	Signal Hill Auto Enterprises, Inc.		G180-JANITORIAL SUPPLIES	$ 76.44	$ -	$ -
4500075987	6/16/2026	W.W. Grainger Inc		G150-FASTENERS	$ 29.15	$ -	$ -
4500075988	6/16/2026	Uline Inc		G200-OFFICE SUPPLIES	$ 216.59	$ -	$ -
4500075989	6/16/2026	2BFueled LLC		A120-AUTO/TRUCK GASOLINE	$ 16,531.15	$ -	$ -
4500075990	6/16/2026	ISC Applied Systems Corp		R150-RAIL/LRV COMM EQUIP	$ 3,961.98	$ -	$ -
4500075991	6/16/2026	Transit Holdings Inc		B250-BUS REPAIR PARTS	$ 597.04	$ -	$ -
4500075992	6/16/2026	Home Depot USA Inc		G140-SHOP SUPPLIES	$ 1,017.25	$ -	$ -

4500075994	6/17/2026	MatterHackers, Inc.		G140-SHOP SUPPLIES	$	301.60	$ -	$ -
4500075995	6/17/2026	Waxie's Enterprises, LLC		G180-JANITORIAL SUPPLIES	$	1,321.19	$ -	$ -
4500075996	6/17/2026	Transit Holdings Inc		B160-BUS ELECTRICAL	$	2,558.91	$ -	$ -
4500075997	6/17/2026	Transit Holdings Inc		B120-BUS MECHANICAL PARTS	$	14.87	$ -	$ -
4500075999	6/17/2026	Siemens Mobility, Inc.		R120-RAIL/LRV CAR BODY	$	20,527.67	$ -	$ -
4500076000	6/17/2026	Pacific Star Corporation		G180-JANITORIAL SUPPLIES	$	64.31	$ -	$ -
4500076001	6/17/2026	Signal Hill Auto Enterprises, Inc.		G180-JANITORIAL SUPPLIES	$	127.41	$ -	$ -
4500076002	6/17/2026	Lawson Products, Inc.		R220-RAIL/LRV TRUCKS	$	1,168.01	$ -	$ -
4500076003	6/17/2026	Cummins Inc		B200-BUS PWR TRAIN EQUIP	$	1,094.76	$ -	$ -
4500076004	6/17/2026	Muncie Reclamation and Supply Co		B160-BUS ELECTRICAL	$	4,871.74	$ -	$ -
4500076005	6/17/2026	Gillig LLC		B250-BUS REPAIR PARTS	$	2,021.96	$ -	$ -
4500076006	6/17/2026	ODP Business Solutions, LLC		G200-OFFICE SUPPLIES	$	890.75	$ -	$ -
4500076007	6/17/2026	Shilpark Paint Corporation		G160-PAINTS & CHEMICALS	$	1,356.99	$ -	$ -
4500076008	6/17/2026	Laird Plastics, Inc		P280-GENERAL SVC AGRMNTS	$	937.44	$ -	$ -
4500076009	6/17/2026	Trentman Corp	Small Business	P280-GENERAL SVC AGRMNTS	$	180.86	$ -	$ -
4500076010	6/17/2026	Transit Holdings Inc		B130-BUS BODY	$	2,838.02	$ -	$ -
4500076011	6/17/2026	Gillig LLC		B130-BUS BODY	$	2,302.78	$ -	$ -
4500076012	6/17/2026	W.W. Grainger Inc		B110-BUS HVAC SYSTEMS	$	176.14	$ -	$ -
4500076013	6/17/2026	Motion Industries, Inc.		B250-BUS REPAIR PARTS	$	231.20	$ -	$ -
4500076014	6/17/2026	Mcmaster-Carr Supply Co		R230-RAIL/LRV MECHANICAL	$	38.91	$ -	$ -
4500076015	6/17/2026	Blue Angel International LLC	Small Business	G190-SAFETY/MED SUPPLIES	$	270.23	$ -	$ -
4500076016	6/17/2026	Clarran Inc.	DBE	G150-FASTENERS	$	222.53	$ -	$ -
4500076017	6/17/2026	Railquip Inc.		G130-SHOP TOOLS	$	147,194.73	$ -	$ -
4500076018	6/18/2026	Jamison Professional Services, LLC	DBE	G170-LUBRICANTS	$	1,280.58	$ -	$ -
4500076020	6/18/2026	Shilpark Paint Corporation		G160-PAINTS & CHEMICALS	$	610.38	$ -	$ -
4500076021	6/18/2026	Waxie's Enterprises, LLC		G180-JANITORIAL SUPPLIES	$	393.07	$ -	$ -
4500076022	6/18/2026	Waxie's Enterprises, LLC		G180-JANITORIAL SUPPLIES	$	219.15	$ -	$ -
4500076023	6/18/2026	Transit Holdings Inc		B250-BUS REPAIR PARTS	$	196.20	$ -	$ -
4500076024	6/18/2026	Transit Holdings Inc		B120-BUS MECHANICAL PARTS	$	2,952.95	$ -	$ -
4500076025	6/18/2026	Maxwell Industries R&D, Inc.		R130-RAIL/LRV COUPLER	$	28,549.44	$ -	$ -
4500076026	6/18/2026	Ace Uniforms LLC	Small Business	P480-EE MAINTENANCE	$	322.06	$ -	$ -
4500076027	6/18/2026	Siemens Mobility, Inc.		M130-CROSSING MECHANISM	$	25,849.72	$ -	$ -
4500076028	6/18/2026	Gillig LLC		B160-BUS ELECTRICAL	$	367.86	$ -	$ -
4500076029	6/18/2026	Home Depot USA Inc		G130-SHOP TOOLS	$	610.56	$ -	$ -
4500076030	6/18/2026	Norman Industrial Materials Inc.		G140-SHOP SUPPLIES	$	561.76	$ -	$ -
4500076031	6/18/2026	Transit Holdings Inc		B130-BUS BODY	$	1,042.57	$ -	$ -
4500076032	6/18/2026	San Diego Friction Products, Inc.		B120-BUS MECHANICAL PARTS	$	3,951.21	$ -	$ -
4500076033	6/18/2026	R.S. Hughes Co Inc		B130-BUS BODY	$	911.62	$ -	$ -
4500076034	6/18/2026	Daniels Tire Service, Inc		R210-RAIL/LRV TIRES	$	996.28	$ -	$ -
4500076035	6/18/2026	Clarran Inc.	DBE	G150-FASTENERS	$	66.79	$ -	$ -
4500076036	6/18/2026	Trolley Support LLC		B130-BUS BODY	$	2,257.37	$ -	$ -
4500076037	6/18/2026	Harbor Diesel & Equipment, Inc		B120-BUS MECHANICAL PARTS	$	185.12	$ -	$ -
4500076038	6/18/2026	No-Spill Systems Inc		B120-BUS MECHANICAL PARTS	$	92.34	$ -	$ -
4500076040	6/18/2026	Alliant Insurance Services, Inc.		P370-RISK MANAGEMENT	$	31,054.00	$ -	$ -
4500076041	6/18/2026	Alliant Insurance Services, Inc.		P370-RISK MANAGEMENT	$	20,262.00	$ -	$ -
4500076042	6/18/2026	Transit Holdings Inc		B250-BUS REPAIR PARTS	$	4,328.03	$ -	$ -
4500076043	6/18/2026	Gillig LLC		B250-BUS REPAIR PARTS	$	1,453.10	$ -	$ -
4500076044	6/18/2026	Siemens Mobility, Inc.		R160-RAIL/LRV ELECTRICAL	$	3,000.00	$ -	$ -
4500076045	6/18/2026	Cummins Inc		B200-BUS PWR TRAIN EQUIP	$	523.17	$ -	$ -

4500076046	6/18/2026	Winzer Franchise Company		G270-ELECTRICAL/LIGHTING	$	1,148.59	$ -	$ -
4500076047	6/18/2026	Kurt Morgan		G200-OFFICE SUPPLIES	$	1,346.20	$ -	$ -
4500076048	6/19/2026	Mohawk Mfg & Supply Co		B200-BUS PWR TRAIN EQUIP	$	5.39	$ -	$ -
4500076049	6/19/2026	Transit Holdings Inc		B140-BUS CHASSIS	$	1,327.39	$ -	$ -
4500076050	6/19/2026	Transit Holdings Inc		B250-BUS REPAIR PARTS	$	677.10	$ -	$ -
4500076051	6/19/2026	Waxie's Enterprises, LLC		G180-JANITORIAL SUPPLIES	$	272.66	$ -	$ -
4500076052	6/19/2026	Transit Holdings Inc		B130-BUS BODY	$	1,025.05	$ -	$ -
4500076053	6/19/2026	Vehicle Maintenance Program, Inc.	Woman Owned Business	B110-BUS HVAC SYSTEMS	$	107.51	$ -	$ -
4500076054	6/19/2026	Cummins Inc		B200-BUS PWR TRAIN EQUIP	$	307.56	$ -	$ -
4500076055	6/19/2026	Transit Holdings Inc		B160-BUS ELECTRICAL	$	908.39	$ -	$ -
4500076056	6/19/2026	Out-Fit A California Corporation		G220-OFFICE EQUIPMENT	$	5,958.39	$ -	$ -
4500076057	6/22/2026	Waxie's Enterprises, LLC		G180-JANITORIAL SUPPLIES	$	656.85	$ -	$ -
4500076058	6/22/2026	Siemens Mobility, Inc.		R120-RAIL/LRV CAR BODY	$	543.06	$ -	$ -
4500076059	6/22/2026	Cummins Inc		B200-BUS PWR TRAIN EQUIP	$	50.42	$ -	$ -
4500076060	6/22/2026	Waxie's Enterprises, LLC		G180-JANITORIAL SUPPLIES	$	381.53	$ -	$ -
4500076061	6/22/2026	Transit Holdings Inc		B140-BUS CHASSIS	$	3,225.30	$ -	$ -
4500076062	6/22/2026	Signal Hill Auto Enterprises, Inc.		G180-JANITORIAL SUPPLIES	$	892.17	$ -	$ -
4500076063	6/22/2026	Transit Holdings Inc		B250-BUS REPAIR PARTS	$	53.40	$ -	$ -
4500076064	6/22/2026	Transit Holdings Inc		B140-BUS CHASSIS	$	1,259.35	$ -	$ -
4500076065	6/22/2026	W.W. Grainger Inc		F110-SHOP/BLDG MACHINERY	$	456.60	$ -	$ -
4500076066	6/22/2026	San Diego Friction Products, Inc.		B140-BUS CHASSIS	$	944.32	$ -	$ -
4500076067	6/22/2026	W.W. Grainger Inc		F110-SHOP/BLDG MACHINERY	$	1,218.18	$ -	$ -
4500076068	6/22/2026	Shilpark Paint Corporation		F180-BUILDING MATERIALS	$	32.80	$ -	$ -
4500076069	6/22/2026	All Industrial Tool Supply		G140-SHOP SUPPLIES	$	1,023.84	$ -	$ -
4500076070	6/22/2026	SC Commercial, LLC		A120-AUTO/TRUCK GASOLINE	$	3,342.54	$ -	$ -
4500076071	6/22/2026	Siemens Mobility, Inc.		R220-RAIL/LRV TRUCKS	$	9,374.25	$ -	$ -
4500076072	6/22/2026	Ace Uniforms LLC	Small Business	C120-SPECIALTY CONTRACTOR	$	301.70	$ -	$ -
4500076073	6/22/2026	Shilpark Paint Corporation		G160-PAINTS & CHEMICALS	$	1,356.98	$ -	$ -
4500076074	6/22/2026	Arts Lawnmower and Repairs LLC		F190-LANDSCAPING MAT'LS	$	517.14	$ -	$ -
4500076075	6/22/2026	MatterHackers, Inc.		G130-SHOP TOOLS	$	127.68	$ -	$ -
4500076076	6/22/2026	Cembre Inc		M170-IMPEDANCE BOND	$	2,732.30	$ -	$ -
4500076077	6/22/2026	Fastenal Company		G130-SHOP TOOLS	$	32.20	$ -	$ -
4500076078	6/22/2026	Inland Kenworth (US) Inc		B250-BUS REPAIR PARTS	$	2,414.15	$ -	$ -
4500076079	6/22/2026	Motion Industries, Inc.		G140-SHOP SUPPLIES	$	599.32	$ -	$ -
4500076080	6/22/2026	Reid and Clark Screen Arts Co		R120-RAIL/LRV CAR BODY	$	463.33	$ -	$ -
4500076081	6/22/2026	Siemens Mobility, Inc.		R120-RAIL/LRV CAR BODY	$	1,222.97	$ -	$ -
4500076082	6/22/2026	Siemens Mobility, Inc.		R220-RAIL/LRV TRUCKS	$	69,440.00	$ -	$ -
4500076083	6/22/2026	2BFueled LLC		A120-AUTO/TRUCK GASOLINE	$	15,062.71	$ -	$ -
4500076084	6/22/2026	Southern Counties Oil Co, LP		A120-AUTO/TRUCK GASOLINE	$	3,205.80	$ -	$ -
4500076085	6/22/2026	Team One Repair Inc		G290-FARE REVENUE EQUIP	$	4,295.48	$ -	$ -
4500076086	6/22/2026	Clarran Inc.	DBE	G150-FASTENERS	$	520.63	$ -	$ -
4500076087	6/22/2026	Transit Holdings Inc		B120-BUS MECHANICAL PARTS	$	3,679.87	$ -	$ -
4500076088	6/22/2026	711 Print Enterprises Inc		G230-PRINTED MATERIALS	$	4,998.53	$ -	$ -
4500076089	6/23/2026	Transit Holdings Inc		B250-BUS REPAIR PARTS	$	515.98	$ -	$ -
4500076090	6/23/2026	Transit Holdings Inc		B140-BUS CHASSIS	$	112.49	$ -	$ -
4500076092	6/23/2026	Day Management Corp		G120-SECURITY	$	2,963.13	$ -	$ -
4500076093	6/23/2026	RJ International LLC	DBE	G140-SHOP SUPPLIES	$	336.72	$ -	$ -
4500076094	6/23/2026	Genuine Parts Company Inc		R120-RAIL/LRV CAR BODY	$	32.27	$ -	$ -
4500076095	6/23/2026	Blue Source Group Inc		I110-INFORMATION TECH	$	91,818.87	$ -	$ -

4500076096	6/23/2026	Transit Holdings Inc		B130-BUS BODY	$	3,226.14	$ -	$ -
4500076097	6/23/2026	Airgas Inc		G140-SHOP SUPPLIES	$	21.01	$ -	$ -
4500076098	6/23/2026	Clarran Inc.	DBE	G130-SHOP TOOLS	$	256.43	$ -	$ -
4500076099	6/23/2026	Cummins Inc		B250-BUS REPAIR PARTS	$	857.96	$ -	$ -
4500076101	6/23/2026	E W Truck & Equipment Co Inc		B130-BUS BODY	$	899.93	$ -	$ -
4500076102	6/23/2026	Fastenal Company		G140-SHOP SUPPLIES	$	457.84	$ -	$ -
4500076103	6/23/2026	Freeby Signs		B130-BUS BODY	$	362.48	$ -	$ -
4500076104	6/23/2026	Genfare, LLC		B250-BUS REPAIR PARTS	$	1,011.70	$ -	$ -
4500076105	6/23/2026	Gillig LLC		B250-BUS REPAIR PARTS	$	4,396.60	$ -	$ -
4500076106	6/23/2026	Pacific Star Corporation		G180-JANITORIAL SUPPLIES	$	79.04	$ -	$ -
4500076108	6/23/2026	vCloud Tech Inc.	DBE	I110-INFORMATION TECH	$	50,265.60	$ -	$ -
4500076109	6/23/2026	Alliant Insurance Services, Inc.		P370-RISK MANAGEMENT	$	103.25	$ -	$ -
4500076110	6/24/2026	Cummins Inc		B200-BUS PWR TRAIN EQUIP	$	1,694.41	$ -	$ -
4500076111	6/24/2026	Transit Holdings Inc		B200-BUS PWR TRAIN EQUIP	$	1,747.14	$ -	$ -
4500076112	6/24/2026	VSI Technologies Inc	Woman Owned Business	G190-SAFETY/MED SUPPLIES	$	258.60	$ -	$ -
4500076113	6/24/2026	Cummins Inc		B200-BUS PWR TRAIN EQUIP	$	1,433.68	$ -	$ -
4500076114	6/24/2026	2BFueled LLC		A120-AUTO/TRUCK GASOLINE	$	3,937.89	$ -	$ -
4500076115	6/24/2026	General Signals Inc		M130-CROSSING MECHANISM	$	24,448.89	$ -	$ -
4500076116	6/24/2026	Shilpark Paint Corporation		G160-PAINTS & CHEMICALS	$	53.47	$ -	$ -
4500076118	6/24/2026	Tensator Inc.		G210-OFFICE FURNITURE	$	4,620.75	$ -	$ -
4500076119	6/24/2026	J H Platinum		P330-UNIFORM RENT/CLEAN	$	2,550.00	$ -	$ -
4500076120	6/24/2026	Siemens Mobility, Inc.		R160-RAIL/LRV ELECTRICAL	$	10,094.02	$ -	$ -
4500076121	6/24/2026	Day Management Corp		P210-NON-REV VEH REPAIRS	$	773.48	$ -	$ -
4500076123	6/24/2026	Transit Holdings Inc		B250-BUS REPAIR PARTS	$	1,484.86	$ -	$ -
4500076124	6/24/2026	Muncie Reclamation and Supply Co		B250-BUS REPAIR PARTS	$	1,597.59	$ -	$ -
4500076125	6/24/2026	San Diego Friction Products, Inc.		B140-BUS CHASSIS	$	2,720.17	$ -	$ -
4500076126	6/24/2026	Mohawk Mfg & Supply Co		B140-BUS CHASSIS	$	1,952.16	$ -	$ -
4500076127	6/24/2026	Mohawk Mfg & Supply Co		B140-BUS CHASSIS	$	12,775.57	$ -	$ -
4500076128	6/24/2026	Mohawk Mfg & Supply Co		B140-BUS CHASSIS	$	1,163.81	$ -	$ -
4500076129	6/24/2026	Mohawk Mfg & Supply Co		B140-BUS CHASSIS	$	4,135.07	$ -	$ -
4500076130	6/24/2026	Muncie Reclamation and Supply Co		B140-BUS CHASSIS	$	3,761.06	$ -	$ -
4500076131	6/24/2026	Western-Cullen-Hayes Inc		M130-CROSSING MECHANISM	$	1,336.10	$ -	$ -
4500076132	6/24/2026	E W Truck & Equipment Co Inc		B200-BUS PWR TRAIN EQUIP	$	4,155.92	$ -	$ -
4500076133	6/24/2026	Gillig LLC		B130-BUS BODY	$	3,690.26	$ -	$ -
4500076134	6/25/2026	Transit Holdings Inc		B110-BUS HVAC SYSTEMS	$	1,414.26	$ -	$ -
4500076135	6/25/2026	Signal Hill Auto Enterprises, Inc.		G180-JANITORIAL SUPPLIES	$	835.07	$ -	$ -
4500076136	6/25/2026	E W Truck & Equipment Co Inc		B200-BUS PWR TRAIN EQUIP	$	4,155.92	$ -	$ -
4500076137	6/25/2026	Blue Angel International LLC	Small Business	G140-SHOP SUPPLIES	$	216.19	$ -	$ -
4500076138	6/25/2026	MJ Service Industries LLC	Disabled Veteran Business	G200-OFFICE SUPPLIES	$	3,252.92	$ -	$ -
4500076139	6/25/2026	Blue Angel International LLC	Small Business	G190-SAFETY/MED SUPPLIES	$	82.23	$ -	$ -
4500076140	6/25/2026	OneSource Distributors, LLC		G140-SHOP SUPPLIES	$	1,884.95	$ -	$ -
4500076141	6/25/2026	Linde Gas & Equipment Inc.		G130-SHOP TOOLS	$	3,806.99	$ -	$ -
4500076142	6/25/2026	Daniels Tire Service, Inc		A110-AUTO/TRUCK TIRES	$	1,276.45	$ -	$ -
4500076143	6/25/2026	Railroad Tools & Solutions LLC		T120-TRACK, LUBRICATORS	$	1,923.35	$ -	$ -
4500076144	6/25/2026	W.W. Grainger Inc		F110-SHOP/BLDG MACHINERY	$	129.14	$ -	$ -
4500076145	6/25/2026	Freeby Signs		B250-BUS REPAIR PARTS	$	63.03	$ -	$ -
4500076146	6/25/2026	DPrep Inc		P490-MANAGEMENT TRAINING	$	850.00	$ -	$ -
4500076147	6/25/2026	Team One Repair Inc		G290-FARE REVENUE EQUIP	$	45,933.83	$ -	$ -
4500076148	6/25/2026	W.W. Grainger Inc		B130-BUS BODY	$	1,140.45	$ -	$ -

4500076149	6/25/2026	Home Depot USA Inc		G200-OFFICE SUPPLIES	$	58.06	$ -	$ -
4500076150	6/25/2026	Miller Felpax Corporation		P130-EQUIP MAINT REPR SVC	$	120,697.70	$ -	$ -
4500076151	6/25/2026	SANDAG		C120-SPECIALTY CONTRACTOR	$	45,000.00	$ -	$ -
4500076152	6/25/2026	Vern Rose Inc		G160-PAINTS & CHEMICALS	$	546.76	$ -	$ -
4500076153	6/25/2026	Waxie's Enterprises, LLC		G180-JANITORIAL SUPPLIES	$	1,598.15	$ -	$ -
4500076154	6/25/2026	Waxie's Enterprises, LLC		G180-JANITORIAL SUPPLIES	$	516.30	$ -	$ -
4500076155	6/25/2026	Waxie's Enterprises, LLC		G180-JANITORIAL SUPPLIES	$	1,319.39	$ -	$ -
4500076156	6/25/2026	Transit Holdings Inc		B130-BUS BODY	$	2,319.27	$ -	$ -
4500076157	6/25/2026	Transit Holdings Inc		B250-BUS REPAIR PARTS	$	2,672.54	$ -	$ -
4500076158	6/25/2026	Gillig LLC		B130-BUS BODY	$	1,501.34	$ -	$ -
4500076159	6/25/2026	Mohawk Mfg & Supply Co		B130-BUS BODY	$	91.83	$ -	$ -
4500076160	6/25/2026	Prudential Overall Supply		G140-SHOP SUPPLIES	$	1,163.70	$ -	$ -
4500076161	6/25/2026	W.W. Grainger Inc		M110-SUB STATION	$	3,048.36	$ -	$ -
4500076162	6/25/2026	Cummins Inc		B200-BUS PWR TRAIN EQUIP	$	462.18	$ -	$ -
4500076163	6/25/2026	M Power Truck & Diesel		G270-ELECTRICAL/LIGHTING	$	2,390.98	$ -	$ -
4500076164	6/26/2026	Transit Holdings Inc		B120-BUS MECHANICAL PARTS	$	1,246.21	$ -	$ -
4500076165	6/26/2026	Blue Angel International LLC	Small Business	G140-SHOP SUPPLIES	$	74.12	$ -	$ -
4500076166	6/26/2026	Cummins Inc		B200-BUS PWR TRAIN EQUIP	$	18,319.82	$ -	$ -
4500076167	6/26/2026	Blue Angel International LLC	Small Business	G190-SAFETY/MED SUPPLIES	$	530.64	$ -	$ -
4500076168	6/26/2026	Madden Construction Inc		P280-GENERAL SVC AGRMNTS	$	966.50	$ -	$ -
4500076169	6/26/2026	Madden Construction Inc		P280-GENERAL SVC AGRMNTS	$	538.50	$ -	$ -
4500076170	6/26/2026	Myers & Sons Hi-Way Safety Inc		M140-WAYSIDE SIGNALS	$	1,328.48	$ -	$ -
4500076171	6/26/2026	Madden Construction Inc		P280-GENERAL SVC AGRMNTS	$	998.50	$ -	$ -
4500076172	6/26/2026	E-Z Spring & Stamping inc.		T140-TRACK, TURNOUTS	$	2,303.33	$ -	$ -
4500076173	6/26/2026	B and H Photo and Electronics		G220-OFFICE EQUIPMENT	$	214.41	$ -	$ -
4500076174	6/26/2026	Waxie's Enterprises, LLC		G180-JANITORIAL SUPPLIES	$	1,146.51	$ -	$ -
4500076175	6/26/2026	Transit Holdings Inc		B140-BUS CHASSIS	$	1,878.64	$ -	$ -
4500076176	6/26/2026	Home Depot USA Inc		G140-SHOP SUPPLIES	$	1,160.57	$ -	$ -
4500076177	6/26/2026	Lawson Products, Inc.		R220-RAIL/LRV TRUCKS	$	584.01	$ -	$ -
4500076178	6/26/2026	Midwest Bus Corporation		B130-BUS BODY	$	496.83	$ -	$ -
4500076179	6/26/2026	VGP Holdings LLC		B200-BUS PWR TRAIN EQUIP	$	2,649.03	$ -	$ -
4500076180	6/26/2026	San Diego Friction Products, Inc.		B140-BUS CHASSIS	$	4,394.17	$ -	$ -
4500076181	6/26/2026	R.S. Hughes Co Inc		G140-SHOP SUPPLIES	$	1,678.99	$ -	$ -
4500076182	6/26/2026	Rush Truck Centers of California		B250-BUS REPAIR PARTS	$	40.54	$ -	$ -
4500076183	6/26/2026	Cummins Inc		B250-BUS REPAIR PARTS	$	7,341.78	$ -	$ -
4500076184	6/26/2026	Amazon.com Sales, Inc.		G200-OFFICE SUPPLIES	$	357.60	$ -	$ -
4500076185	6/26/2026	San Diego Friction Products, Inc.		B120-BUS MECHANICAL PARTS	$	4,413.07	$ -	$ -
4500076186	6/26/2026	Clarran Inc.	DBE	G150-FASTENERS	$	74.39	$ -	$ -
4500076187	6/26/2026	Gillig LLC		B250-BUS REPAIR PARTS	$	182.16	$ -	$ -
4500076188	6/29/2026	Transit Holdings Inc		B160-BUS ELECTRICAL	$	196.23	$ -	$ -
4500076189	6/29/2026	Transit Holdings Inc		B160-BUS ELECTRICAL	$	2,867.86	$ -	$ -
4500076190	6/29/2026	Mohawk Mfg & Supply Co		B140-BUS CHASSIS	$	54.89	$ -	$ -
4500076191	6/29/2026	Mohawk Mfg & Supply Co		B200-BUS PWR TRAIN EQUIP	$	725.70	$ -	$ -
4500076192	6/29/2026	Transit Holdings Inc		B250-BUS REPAIR PARTS	$	1,964.54	$ -	$ -
4500076193	6/29/2026	Waxie's Enterprises, LLC		G180-JANITORIAL SUPPLIES	$	279.49	$ -	$ -
4500076194	6/29/2026	Jamison Professional Services, LLC	DBE	G170-LUBRICANTS	$	1,717.62	$ -	$ -
4500076195	6/29/2026	Blue Angel International LLC	Small Business	G190-SAFETY/MED SUPPLIES	$	323.51	$ -	$ -
4500076196	6/29/2026	Network Industries, Inc.		P130-EQUIP MAINT REPR SVC	$	1,684.85	$ -	$ -
4500076197	6/29/2026	Home Depot USA Inc		G130-SHOP TOOLS	$	478.11	$ -	$ -

4500076198	6/29/2026	ODP Business Solutions, LLC		G200-OFFICE SUPPLIES	$	69.71	$ -	$ -
4500076199	6/29/2026	Steven R Timme		G230-PRINTED MATERIALS	$	661.12	$ -	$ -
4500076200	6/29/2026	Clear Channel Outdoor LLC		P310-ADVERTISING SERVICES	$	3,500.00	$ -	$ -
4500076201	6/29/2026	Sign Post Studio Inc	Small Business	G230-PRINTED MATERIALS	$	207.95	$ -	$ -
4500076202	6/29/2026	Neyenesch Printers Inc	Small Business	G230-PRINTED MATERIALS	$	3,520.42	$ -	$ -
4500076203	6/29/2026	Dimensional Silk Screen Inc		G230-PRINTED MATERIALS	$	601.25	$ -	$ -
4500076204	6/29/2026	Data Controls Printworks, Inc.	Small Business	G230-PRINTED MATERIALS	$	145.47	$ -	$ -
4500076205	6/29/2026	Del Mar Blue Print Co., Inc.		G230-PRINTED MATERIALS	$	552.06	$ -	$ -
4500076206	6/29/2026	VCA Animal Hospitals, Inc.		G120-SECURITY	$	517.26	$ -	$ -
4500076207	6/29/2026	RJ International LLC	DBE	G140-SHOP SUPPLIES	$	4,723.23	$ -	$ -
4500076208	6/29/2026	2BFueled LLC		A120-AUTO/TRUCK GASOLINE	$	14,900.90	$ -	$ -
4500076209	6/29/2026	Southern Counties Oil Co, LP		A120-AUTO/TRUCK GASOLINE	$	3,156.48	$ -	$ -
4500076210	6/29/2026	Prochem Specialty Products Inc	Small Business	G180-JANITORIAL SUPPLIES	$	977.83	$ -	$ -
4500076211	6/29/2026	Staples Contract & Commercial LLC		G200-OFFICE SUPPLIES	$	2,204.33	$ -	$ -
4500076212	6/29/2026	Clarran Inc.	DBE	G150-FASTENERS	$	535.13	$ -	$ -
4500076213	6/29/2026	Gillig LLC		B120-BUS MECHANICAL PARTS	$	2,542.06	$ -	$ -
4500076214	6/29/2026	Muncie Reclamation and Supply Co		B160-BUS ELECTRICAL	$	3,722.60	$ -	$ -
4500076215	6/29/2026	San Diego Friction Products, Inc.		B120-BUS MECHANICAL PARTS	$	4,357.60	$ -	$ -
4500076216	6/29/2026	Quadient, Inc.		G200-OFFICE SUPPLIES	$	189.37	$ -	$ -
4500076217	6/29/2026	TK Services Inc		R170-RAIL/LRV HVAC	$	4,550.82	$ -	$ -
4500076218	6/29/2026	Sorianos Pizzeria LLC		P480-EE MAINTENANCE	$	517.57	$ -	$ -
4500076219	6/29/2026	Waxie's Enterprises, LLC		G140-SHOP SUPPLIES	$	57.05	$ -	$ -
4500076220	6/29/2026	Kurt Morgan		G200-OFFICE SUPPLIES	$	1,740.65	$ -	$ -
4500076221	6/29/2026	Corodata Shredding, Inc.		S130-DISPOSAL, OTHER	$	171.00	$ -	$ -
4500076222	6/30/2026	Mohawk Mfg & Supply Co		B200-BUS PWR TRAIN EQUIP	$	423.46	$ -	$ -
4500076223	6/30/2026	Transit Holdings Inc		B120-BUS MECHANICAL PARTS	$	210.11	$ -	$ -
4500076224	6/30/2026	Transit Holdings Inc		B140-BUS CHASSIS	$	806.40	$ -	$ -
4500076225	6/30/2026	TK Services Inc		G170-LUBRICANTS	$	3,195.30	$ -	$ -
4500076226	6/30/2026	Cummins Inc		B200-BUS PWR TRAIN EQUIP	$	9,847.76	$ -	$ -
4500076227	6/30/2026	Newman Signs, Inc		G230-PRINTED MATERIALS	$	4,228.00	$ -	$ -
4500076228	6/30/2026	Home Depot USA Inc		G200-OFFICE SUPPLIES	$	133.34	$ -	$ -
4500076229	6/30/2026	ISC Applied Systems Corp		R150-RAIL/LRV COMM EQUIP	$	23,597.25	$ -	$ -
4500076230	6/30/2026	Transit Holdings Inc		B250-BUS REPAIR PARTS	$	586.54	$ -	$ -
4500076231	6/30/2026	B and H Photo and Electronics		G220-OFFICE EQUIPMENT	$	363.58	$ -	$ -
4500076232	6/30/2026	W.W. Grainger Inc		G190-SAFETY/MED SUPPLIES	$	503.22	$ -	$ -
4500076233	6/30/2026	MTM Recognition Corp.		G250-NOVELTIES & AWARDS	$	551.78	$ -	$ -
4500076234	6/30/2026	Raphael's Party Rentals Inc		G250-NOVELTIES & AWARDS	$	4,227.70	$ -	$ -
4500076235	6/30/2026	Rayne - San Diego Inc		P280-GENERAL SVC AGRMNTS	$	611.00	$ -	$ -
4500076236	6/30/2026	Peloton Interactive, Inc.		P280-GENERAL SVC AGRMNTS	$	528.00	$ -	$ -
4500076237	6/30/2026	SC Commercial, LLC		A120-AUTO/TRUCK GASOLINE	$	17,407.09	$ -	$ -
4500076238	6/30/2026	COX COMMUNICATIONS CA LLC		P280-GENERAL SVC AGRMNTS	$	2,150.00	$ -	$ -
4500076239	6/30/2026	Siemens Mobility, Inc.		R230-RAIL/LRV MECHANICAL	$	398.57	$ -	$ -
4500076240	6/30/2026	Mcmaster-Carr Supply Co		B160-BUS ELECTRICAL	$	372.50	$ -	$ -
4500076241	6/30/2026	Trolley Support LLC		B130-BUS BODY	$	2,316.63	$ -	$ -
4500076242	7/1/2026	Transit Holdings Inc		B130-BUS BODY	$	330.57	$ -	$ -
4500076243	7/1/2026	Transit Holdings Inc		B250-BUS REPAIR PARTS	$	1,161.35	$ -	$ -
4500076244	7/1/2026	Fastenal Company		R230-RAIL/LRV MECHANICAL	$	4,706.52	$ -	$ -
4500076245	7/1/2026	SAP Public Services, Inc.		I120-INFO TECH, SVCS	$	648.00	$ -	$ -
4500076246	7/1/2026	Ibilola Ogun	Small Business	I110-INFORMATION TECH	$	25,197.75	$ -	$ -

4500076247	7/1/2026	Draycor, Inc.		I130-IT CAPITAL HARDWARE	$	9,697.50	$	-	$ -
4500076250	7/2/2026	Transit Holdings Inc		B140-BUS CHASSIS	$	71.39	$	-	$ -
4500076251	7/2/2026	Transit Holdings Inc		B130-BUS BODY	$	25.65	$	-	$ -
4500076252	7/2/2026	Waxie's Enterprises, LLC		G180-JANITORIAL SUPPLIES	$	1,215.42	$	-	$ -
4500076253	7/2/2026	Transit Holdings Inc		B140-BUS CHASSIS	$	7,734.34	$	-	$ -
4500076254	7/2/2026	Transit Holdings Inc		B250-BUS REPAIR PARTS	$	120.59	$	-	$ -
4500076255	7/2/2026	Mohawk Mfg & Supply Co		B200-BUS PWR TRAIN EQUIP	$	520.57	$	-	$ -
4500076256	7/2/2026	Waxie's Enterprises, LLC		G180-JANITORIAL SUPPLIES	$	2,055.87	$	-	$ -
4500076257	7/2/2026	Transit Holdings Inc		B130-BUS BODY	$	389.45	$	-	$ -
4500076258	7/2/2026	Jamison Professional Services, LLC	DBE	G170-LUBRICANTS	$	320.15	$	-	$ -
4500076259	7/2/2026	Gillig LLC		B200-BUS PWR TRAIN EQUIP	$	669.33	$	-	$ -
4500076260	7/2/2026	San Diego Friction Products, Inc.		B140-BUS CHASSIS	$	4,394.17	$	-	$ -
4500076261	7/2/2026	Transit Holdings Inc		B160-BUS ELECTRICAL	$	2,482.26	$	-	$ -
4500076262	7/2/2026	W.W. Grainger Inc		G140-SHOP SUPPLIES	$	853.40	$	-	$ -
4500076263	7/2/2026	San Diego Hydraulics, Inc.		P210-NON-REV VEH REPAIRS	$	508.80	$	-	$ -
4500076264	7/2/2026	NS Corporation		F110-SHOP/BLDG MACHINERY	$	4,131.37	$	-	$ -
4500076265	7/2/2026	Home Depot USA Inc		F110-SHOP/BLDG MACHINERY	$	557.07	$	-	$ -
4500076266	7/2/2026	Madden Construction Inc		P280-GENERAL SVC AGRMNTS	$	998.64	$	-	$ -
4500076267	7/2/2026	San Diego Friction Products, Inc.		G130-SHOP TOOLS	$	1,600.09	$	-	$ -
4500076268	7/2/2026	E W Truck & Equipment Co Inc		B200-BUS PWR TRAIN EQUIP	$	4,155.92	$	-	$ -
4500076269	7/2/2026	ABC General Contractor, Inc.		C110-GENERAL CONTRACTORS	$	141,374.65	$	-	$ 19,057.30
4500076270	7/6/2026	Transit Holdings Inc		B200-BUS PWR TRAIN EQUIP	$	159.90	$	-	$ -
4500076271	7/6/2026	VSI Technologies Inc	Woman Owned Business	G190-SAFETY/MED SUPPLIES	$	48.49	$	-	$ -
4500076272	7/6/2026	Waxie's Enterprises, LLC		G180-JANITORIAL SUPPLIES	$	1,695.32	$	-	$ -
4500076273	7/6/2026	Init Innovations in Transportation		G290-FARE REVENUE EQUIP	$	12,321.39	$	-	$ -
4500076274	7/6/2026	Signal Hill Auto Enterprises, Inc.		G180-JANITORIAL SUPPLIES	$	282.31	$	-	$ -
4500076275	7/6/2026	Blue Angel International LLC	Small Business	G190-SAFETY/MED SUPPLIES	$	411.18	$	-	$ -
4500076276	7/6/2026	Cummins Inc		B200-BUS PWR TRAIN EQUIP	$	11,797.50	$	-	$ -
4500076277	7/6/2026	Waxie's Enterprises, LLC		G180-JANITORIAL SUPPLIES	$	4,800.27	$	-	$ -
4500076278	7/6/2026	Clarran Inc.	DBE	G140-SHOP SUPPLIES	$	112.71	$	-	$ -
4500076279	7/6/2026	San Diego Friction Products, Inc.		G140-SHOP SUPPLIES	$	1,453.52	$	-	$ -
4500076280	7/6/2026	Cummins Inc		B200-BUS PWR TRAIN EQUIP	$	307.56	$	-	$ -
4500076281	7/6/2026	Transit Holdings Inc		B120-BUS MECHANICAL PARTS	$	1,405.98	$	-	$ -
4500076282	7/6/2026	San Diego Friction Products, Inc.		B120-BUS MECHANICAL PARTS	$	1,061.40	$	-	$ -
4500076283	7/6/2026	2BFueled LLC		A120-AUTO/TRUCK GASOLINE	$	15,159.83	$	-	$ -
4500076284	7/6/2026	Southern Counties Oil Co, LP		A120-AUTO/TRUCK GASOLINE	$	3,174.98	$	-	$ -
4500076285	7/6/2026	South County Economic Development		G260-MEDIA	$	400.00	$	-	$ -
4500076286	7/6/2026	Downtown San Diego Partnership		G260-MEDIA	$	1,500.00	$	-	$ -
4500076287	7/6/2026	Schuko LLC		G260-MEDIA	$	753.80	$	-	$ -
4500076288	7/7/2026	Transit Holdings Inc		B160-BUS ELECTRICAL	$	2,009.46	$	-	$ -
4500076289	7/7/2026	Signal Hill Auto Enterprises, Inc.		G180-JANITORIAL SUPPLIES	$	76.44	$	-	$ -
4500076290	7/7/2026	Waxie's Enterprises, LLC		G180-JANITORIAL SUPPLIES	$	958.89	$	-	$ -
4500076291	7/7/2026	Siemens Mobility, Inc.		R120-RAIL/LRV CAR BODY	$	27,370.23	$	-	$ -
4500076292	7/7/2026	Transit Holdings Inc		B250-BUS REPAIR PARTS	$	4,209.56	$	-	$ -
4500076293	7/7/2026	Dimensional Silk Screen Inc		G230-PRINTED MATERIALS	$	1,907.28	$	-	$ -
4500076294	7/7/2026	VCA Animal Hospitals, Inc.		G120-SECURITY	$	106.65	$	-	$ -
4500076295	7/7/2026	Transit Holdings Inc		B160-BUS ELECTRICAL	$	328.85	$	-	$ -
4500076296	7/7/2026	W.W. Grainger Inc		F120-BUS/LRV PAINT BOOTHS	$	138.35	$	-	$ -
4500076297	7/7/2026	Prochem Specialty Products Inc	Small Business	G180-JANITORIAL SUPPLIES	$	1,955.67	$	-	$ -

4500076298	7/7/2026	Genfare, LLC		B250-BUS REPAIR PARTS	$	2,365.53	$ -	$ -
4500076299	7/7/2026	S&A Systems Inc		B250-BUS REPAIR PARTS	$	856.62	$ -	$ -
4500076300	7/7/2026	E W Truck & Equipment Co Inc		B130-BUS BODY	$	1,499.88	$ -	$ -
4500076301	7/7/2026	SC Commercial, LLC		A120-AUTO/TRUCK GASOLINE	$	2,996.88	$ -	$ -
4500076302	7/7/2026	Harbor Diesel & Equipment, Inc		B120-BUS MECHANICAL PARTS	$	259.16	$ -	$ -
4500076303	7/7/2026	Hi-Tec Enterprises		R220-RAIL/LRV TRUCKS	$	24,513.13	$ -	$ -
4500076304	7/7/2026	Init Innovations in Transportation		B190-BUS FARE EQUIP	$	788.75	$ -	$ -
4500076305	7/7/2026	Steven R Timme		G110-BUS/TROLLEY SIGNAGE	$	90.04	$ -	$ -
4500076306	7/7/2026	Tribologik Corporation		G140-SHOP SUPPLIES	$	3,081.59	$ -	$ -
4500076307	7/7/2026	Freeby Signs		B130-BUS BODY	$	100.21	$ -	$ -
4500076308	7/8/2026	Transit Holdings Inc		B130-BUS BODY	$	107.00	$ -	$ -
4500076309	7/8/2026	Cummins Inc		B200-BUS PWR TRAIN EQUIP	$	1,056.16	$ -	$ -
4500076310	7/8/2026	Waxie's Enterprises, LLC		G180-JANITORIAL SUPPLIES	$	1,179.21	$ -	$ -
4500076311	7/8/2026	Waxie's Enterprises, LLC		G180-JANITORIAL SUPPLIES	$	832.01	$ -	$ -
4500076312	7/8/2026	Pacific Star Corporation		G180-JANITORIAL SUPPLIES	$	64.31	$ -	$ -
4500076313	7/8/2026	Blue Angel International LLC	Small Business	G190-SAFETY/MED SUPPLIES	$	1,670.34	$ -	$ -
4500076314	7/8/2026	Waxie's Enterprises, LLC		G180-JANITORIAL SUPPLIES	$	1,616.25	$ -	$ -
4500076315	7/8/2026	Transit Holdings Inc		B160-BUS ELECTRICAL	$	535.64	$ -	$ -
4500076316	7/8/2026	Gillig LLC		B250-BUS REPAIR PARTS	$	445.67	$ -	$ -
4500076317	7/8/2026	Siemens Mobility, Inc.		M130-CROSSING MECHANISM	$	387.58	$ -	$ -
4500076318	7/8/2026	Siemens Mobility, Inc.		M130-CROSSING MECHANISM	$	502.54	$ -	$ -
4500076319	7/8/2026	Cummins Inc		B120-BUS MECHANICAL PARTS	$	1,439.87	$ -	$ -
4500076320	7/8/2026	Cummins Inc		B200-BUS PWR TRAIN EQUIP	$	81.07	$ -	$ -
4500076322	7/8/2026	Gaslamp Media Inc		I120-INFO TECH, SVCS	$	3,586.03	$ -	$ -
4500076323	7/8/2026	TK Services Inc		B110-BUS HVAC SYSTEMS	$	2,480.11	$ -	$ -
4500076324	7/8/2026	Home Depot USA Inc		G130-SHOP TOOLS	$	515.04	$ -	$ -
4500076325	7/8/2026	Vehicle Maintenance Program, Inc.	Woman Owned Business	B250-BUS REPAIR PARTS	$	2,178.17	$ -	$ -
4500076326	7/8/2026	Crossline Supply, LLC		B200-BUS PWR TRAIN EQUIP	$	4,872.46	$ -	$ -
4500076327	7/8/2026	Transit Holdings Inc		B130-BUS BODY	$	1,356.14	$ -	$ -
4500076328	7/8/2026	Muncie Reclamation and Supply Co		B120-BUS MECHANICAL PARTS	$	3,941.48	$ -	$ -
4500076330	7/8/2026	Gillig LLC		B250-BUS REPAIR PARTS	$	2,970.75	$ -	$ -
4500076331	7/8/2026	Clarran Inc.	DBE	G150-FASTENERS	$	281.64	$ -	$ -
4500076332	7/8/2026	San Diego Friction Products, Inc.		B120-BUS MECHANICAL PARTS	$	3,951.21	$ -	$ -
4500076333	7/8/2026	Inland Kenworth (US) Inc		B120-BUS MECHANICAL PARTS	$	136.37	$ -	$ -
4500076334	7/8/2026	Motion Industries, Inc.		B120-BUS MECHANICAL PARTS	$	753.32	$ -	$ -
4500076335	7/8/2026	Uline Inc		G190-SAFETY/MED SUPPLIES	$	3,610.83	$ -	$ -
4500076336	7/8/2026	Myers & Sons Hi-Way Safety Inc		M140-WAYSIDE SIGNALS	$	150.16	$ -	$ -
4500076337	7/8/2026	Southern Counties Lubricants LLC		G170-LUBRICANTS	$	4,622.48	$ -	$ -
4500076338	7/8/2026	Brady Industries of California, LLC		G180-JANITORIAL SUPPLIES	$	263.53	$ -	$ -
4500076339	7/8/2026	National Carwash Solutions Inc		G160-PAINTS & CHEMICALS	$	2,666.01	$ -	$ -
4500076340	7/8/2026	Vern Rose Inc		G140-SHOP SUPPLIES	$	404.83	$ -	$ -
4500076341	7/8/2026	S&A Systems Inc		B250-BUS REPAIR PARTS	$	856.62	$ -	$ -
4500076342	7/8/2026	San Diego Friction Products, Inc.		B140-BUS CHASSIS	$	3,296.20	$ -	$ -
4500076343	7/8/2026	Genuine Parts Company Inc		B120-BUS MECHANICAL PARTS	$	50.62	$ -	$ -
4500076344	7/8/2026	Inland Kenworth (US) Inc		B250-BUS REPAIR PARTS	$	2,414.15	$ -	$ -
4500076345	7/8/2026	R.S. Hughes Co Inc		G140-SHOP SUPPLIES	$	2,151.64	$ -	$ -
4500076346	7/8/2026	Inland Lighting Supplies Inc	Small Business	F110-SHOP/BLDG MACHINERY	$	617.54	$ -	$ -
4500076347	7/8/2026	Uline Inc		F110-SHOP/BLDG MACHINERY	$	184.73	$ -	$ -
4500076348	7/8/2026	W.W. Grainger Inc		F110-SHOP/BLDG MACHINERY	$	225.34	$ -	$ -

4500076349	7/8/2026	Nth Generation Computing Inc		I110-INFORMATION TECH	$ 49,355.82	$ -	$ -
4500076350	7/9/2026	Transit Holdings Inc		B250-BUS REPAIR PARTS	$ 27.16	$ -	$ -
4500076351	7/9/2026	Transit Holdings Inc		B160-BUS ELECTRICAL	$ 1,630.32	$ -	$ -
4500076353	7/9/2026	Cummins Inc		B200-BUS PWR TRAIN EQUIP	$ 11,676.48	$ -	$ -
4500076354	7/9/2026	Airgas Inc		R160-RAIL/LRV ELECTRICAL	$ 1,809.30	$ -	$ -
4500076355	7/9/2026	W.W. Grainger Inc		G140-SHOP SUPPLIES	$ 2,218.91	$ -	$ -
4500076356	7/9/2026	Transit Holdings Inc		B250-BUS REPAIR PARTS	$ 8,483.05	$ -	$ -
4500076357	7/9/2026	Arizona Machinery LLC		A110-AUTO/TRUCK TIRES	$ 642.24	$ -	$ -
4500076358	7/9/2026	Ascendancy Corp		R230-RAIL/LRV MECHANICAL	$ 4,294.16	$ -	$ -
4500076359	7/9/2026	Aymar Industries, LLC.		R140-RAIL/LRV DOORS/RAMP	$ 4,110.00	$ -	$ -
4500076360	7/9/2026	Kurt Morgan		G200-OFFICE SUPPLIES	$ 575.28	$ -	$ -
4500076361	7/9/2026	Siemens Mobility, Inc.		R160-RAIL/LRV ELECTRICAL	$ 54,923.20	$ -	$ -
4500076363	7/9/2026	Brady Industries of California, LLC		G180-JANITORIAL SUPPLIES	$ 263.53	$ -	$ -
4500076364	7/9/2026	Charter Industrial Supply Inc	Small Business	G150-FASTENERS	$ 60.34	$ -	$ -
4500076365	7/9/2026	Clarran Inc.	DBE	G150-FASTENERS	$ 657.60	$ -	$ -
4500076366	7/9/2026	Compressed Air Systems		F110-SHOP/BLDG MACHINERY	$ 394.37	$ -	$ -
4500076367	7/9/2026	Transit Holdings Inc		B140-BUS CHASSIS	$ 7,125.18	$ -	$ -
4500076368	7/9/2026	Alliant Insurance Services, Inc.		P370-RISK MANAGEMENT	$ 20,268.00	$ -	$ -
4500076369	7/9/2026	Transit Holdings Inc		B130-BUS BODY	$ 3,066.15	$ -	$ -
4500076370	7/9/2026	Kurt Morgan		G200-OFFICE SUPPLIES	$ 1,971.19	$ -	$ -
4500076371	7/9/2026	Team One Repair Inc		G290-FARE REVENUE EQUIP	$ 4,576.72	$ -	$ -
4500076372	7/9/2026	Cummins Inc		B250-BUS REPAIR PARTS	$ 1,086.30	$ -	$ -
4500076373	7/9/2026	Staples Contract & Commercial LLC		G200-OFFICE SUPPLIES	$ 246.37	$ -	$ -
4500076374	7/9/2026	The Sherwin-Williams Company		F120-BUS/LRV PAINT BOOTHS	$ 602.89	$ -	$ -
4500076375	7/9/2026	Gillig LLC		B140-BUS CHASSIS	$ 3,296.74	$ -	$ -
4500076376	7/9/2026	Home Depot USA Inc		G140-SHOP SUPPLIES	$ 2,091.38	$ -	$ -
4500076377	7/9/2026	Dimensional Silk Screen Inc		P280-GENERAL SVC AGRMNTS	$ 135.77	$ -	$ -
4500076378	7/9/2026	Transit Holdings Inc		B250-BUS REPAIR PARTS	$ 254.75	$ -	$ -
4500076379	7/9/2026	TK Services Inc		B250-BUS REPAIR PARTS	$ 205.91	$ -	$ -
4500076380	7/9/2026	Prudent Publishing Co Inc		G250-NOVELTIES & AWARDS	$ 190.83	$ -	$ -
4500076381	7/9/2026	Gillig LLC		B130-BUS BODY	$ 4,198.79	$ -	$ -
4500076382	7/9/2026	Public Risk, Innovation, Solutions,		P370-RISK MANAGEMENT	$ 72,024.00	$ -	$ -
4500076383	7/9/2026	Siemens Mobility, Inc.		R160-RAIL/LRV ELECTRICAL	$ 11,211.88	$ -	$ -
4500076384	7/9/2026	Init Innovations in Transportation		G290-FARE REVENUE EQUIP	$ 1,284.40	$ -	$ -
4500076385	7/9/2026	Dimensional Silk Screen Inc		G230-PRINTED MATERIALS	$ 39,705.00	$ -	$ -
4500076386	7/9/2026	Init Innovations in Transportation		G290-FARE REVENUE EQUIP	$ 1,045.00	$ -	$ -
4500076387	7/9/2026	Ace Uniforms LLC	Small Business	C120-SPECIALTY CONTRACTOR	$ 172.39	$ -	$ -
4500076388	7/9/2026	San Diego Committee on Employment		P450-PERSONNEL SVCS	$ 250.00	$ -	$ -
4500076389	7/10/2026	Signal Hill Auto Enterprises, Inc.		G180-JANITORIAL SUPPLIES	$ 892.17	$ -	$ -
4500076390	7/10/2026	Blue Angel International LLC	Small Business	G190-SAFETY/MED SUPPLIES	$ 45.26	$ -	$ -
4500076391	7/10/2026	Waxie's Enterprises, LLC		G180-JANITORIAL SUPPLIES	$ 1,386.68	$ -	$ -
4500076392	7/10/2026	Transit Holdings Inc		B130-BUS BODY	$ 114.65	$ -	$ -
4500076393	7/10/2026	Inland Kenworth (US) Inc		B250-BUS REPAIR PARTS	$ 376.95	$ -	$ -
4500076394	7/10/2026	Radwell International LLC		R240-RAIL/LRV REPR PARTS	$ 1,319.99	$ -	$ -
4500076395	7/10/2026	Clarran Inc.	DBE	G150-FASTENERS	$ 47.86	$ -	$ -
4500076396	7/10/2026	Crossline Supply, LLC		B200-BUS PWR TRAIN EQUIP	$ 4,432.84	$ -	$ -
4500076397	7/10/2026	Cummins Inc		B250-BUS REPAIR PARTS	$ 4,135.05	$ -	$ -
4500076398	7/10/2026	Craigslist Inc.		P450-PERSONNEL SVCS	$ 4,950.00	$ -	$ -
4500076399	7/10/2026	Data Alliance Inc		R150-RAIL/LRV COMM EQUIP	$ 75.21	$ -	$ -

4500076400	7/10/2026	Dellner Inc		R130-RAIL/LRV COUPLER	$	1,273.48	$ -	$ -
4500076401	7/10/2026	Delphin Computer Supply	Small Business	G200-OFFICE SUPPLIES	$	725.70	$ -	$ -
4500076402	7/10/2026	Facility Solutions Group, Inc.		M180-STATION ELECTRICAL	$	161.63	$ -	$ -
4500076403	7/10/2026	Fastenal Company		G180-JANITORIAL SUPPLIES	$	1,309.01	$ -	$ -
4500076404	7/10/2026	Freeby Signs		B130-BUS BODY	$	66.91	$ -	$ -
4500076405	7/10/2026	Transit Finance Learning Exchange		P400-FINANCIAL & AUDIT	$	1,500.00	$ -	$ -
4500076406	7/10/2026	Gillig LLC		B130-BUS BODY	$	4,345.95	$ -	$ -
4500076407	7/10/2026	Transit Holdings Inc		B130-BUS BODY	$	320.45	$ -	$ -
4500076408	7/10/2026	Init Innovations in Transportation		G290-FARE REVENUE EQUIP	$	2,620.50	$ -	$ -
4500076409	7/10/2026	Louis Sardo Upholstery Inc		B130-BUS BODY	$	1,505.81	$ -	$ -
4500076410	7/10/2026	El Tigre Enterprise Inc		G250-NOVELTIES & AWARDS	$	3,400.00	$ -	$ -
4500076411	7/10/2026	Home Depot USA Inc		F110-SHOP/BLDG MACHINERY	$	1,524.09	$ -	$ -
4500076412	7/10/2026	R.S. Hughes Co Inc		G140-SHOP SUPPLIES	$	80.61	$ -	$ -
4500076413	7/10/2026	Vinyard Doors, Inc.	Woman Owned Business	F110-SHOP/BLDG MACHINERY	$	852.50	$ -	$ -
4500076414	7/10/2026	W.W. Grainger Inc		F110-SHOP/BLDG MACHINERY	$	219.92	$ -	$ -
4500076415	7/10/2026	Transit Holdings Inc		B250-BUS REPAIR PARTS	$	4,584.49	$ -	$ -
4500076416	7/10/2026	Dimensional Silk Screen Inc		F110-SHOP/BLDG MACHINERY	$	1,106.60	$ -	$ -
4500076417	7/10/2026	Western Materials Inc	DBE	T160-TRACK, AGGREGATES	$	3,947.19	$ -	$ -
4500076419	7/13/2026	Waxie's Enterprises, LLC		G180-JANITORIAL SUPPLIES	$	91.81	$ -	$ -
4500076420	7/13/2026	Transit Holdings Inc		B130-BUS BODY	$	140.29	$ -	$ -
4500076421	7/13/2026	Transit Holdings Inc		B250-BUS REPAIR PARTS	$	24.37	$ -	$ -
4500076422	7/13/2026	ISC Applied Systems Corp		R150-RAIL/LRV COMM EQUIP	$	10,376.33	$ -	$ -
4500076423	7/13/2026	Siemens Mobility, Inc.		R200-RAIL/LRV SEATING	$	44,364.99	$ -	$ -
4500076424	7/13/2026	Chen Ryan Associates, Inc.	DBE	P520-A & E/DESIGN	$	9,597.92	$ -	$ 7,605.39
4500076425	7/13/2026	Willy's Electronic Supply Co Inc		R160-RAIL/LRV ELECTRICAL	$	83.91	$ -	$ -
4500076426	7/13/2026	Professional Contractors Supplies		G140-SHOP SUPPLIES	$	370.14	$ -	$ -
4500076427	7/13/2026	L&W Industries LLC		M140-WAYSIDE SIGNALS	$	660.09	$ -	$ -
4500076428	7/13/2026	Marco's Canopies Inc		G140-SHOP SUPPLIES	$	4,266.90	$ -	$ -
4500076429	7/13/2026	Jamaica Bearings Co Inc		R220-RAIL/LRV TRUCKS	$	69,276.87	$ -	$ -
4500076430	7/13/2026	Team One Repair Inc		G290-FARE REVENUE EQUIP	$	45,933.83	$ -	$ -
4500076431	7/13/2026	Init Innovations in Transportation		G290-FARE REVENUE EQUIP	$	3,587.00	$ -	$ -
4500076432	7/13/2026	Schunk Carbon Technology LLC		R190-RAIL/LRV PANTOGRAPH	$	2,556.58	$ -	$ -
4500076433	7/13/2026	San Diego Friction Products, Inc.		B250-BUS REPAIR PARTS	$	1,624.07	$ -	$ -
4500076434	7/13/2026	Transit Holdings Inc		B160-BUS ELECTRICAL	$	127.81	$ -	$ -
4500076435	7/13/2026	Winzer Franchise Company		G150-FASTENERS	$	901.30	$ -	$ -
4500076437	7/13/2026	Transit Holdings Inc		B140-BUS CHASSIS	$	934.07	$ -	$ -
4500076438	7/13/2026	Reid and Clark Screen Arts Co		R120-RAIL/LRV CAR BODY	$	3,348.34	$ -	$ -
4500076439	7/13/2026	General Signals Inc		M130-CROSSING MECHANISM	$	7,646.85	$ -	$ -
4500076440	7/13/2026	Winzer Franchise Company		R130-RAIL/LRV COUPLER	$	85.63	$ -	$ -
4500076441	7/13/2026	Home Depot USA Inc		F180-BUILDING MATERIALS	$	627.23	$ -	$ -
4500076442	7/13/2026	KLI Midco LLC		G170-LUBRICANTS	$	587.70	$ -	$ -
4500076443	7/13/2026	Professional Contractors Supplies		G180-JANITORIAL SUPPLIES	$	108.89	$ -	$ -
4500076444	7/13/2026	Pacific Star Corporation		G180-JANITORIAL SUPPLIES	$	1,314.21	$ -	$ -
4500076445	7/13/2026	Team One Repair Inc		G290-FARE REVENUE EQUIP	$	1,908.03	$ -	$ -
4500076446	7/13/2026	Newark Corporation		M130-CROSSING MECHANISM	$	1,619.21	$ -	$ -
4500076447	7/13/2026	RJ International LLC	DBE	G140-SHOP SUPPLIES	$	134.69	$ -	$ -
4500076448	7/13/2026	Cintas Corporation No 2		B250-BUS REPAIR PARTS	$	787.66	$ -	$ -
4500076449	7/13/2026	Mohawk Mfg & Supply Co		B160-BUS ELECTRICAL	$	232.72	$ -	$ -
4500076450	7/13/2026	2BFueled LLC		A120-AUTO/TRUCK GASOLINE	$	14,345.24	$ -	$ -

4500076451	7/13/2026	Transit Holdings Inc		B160-BUS ELECTRICAL	$	2,069.29	$ -	$ -
4500076452	7/13/2026	Gillig LLC		B250-BUS REPAIR PARTS	$	1,448.44	$ -	$ -
4500076453	7/13/2026	Gillig LLC		G150-FASTENERS	$	-	$ -	$ -
4500076454	7/13/2026	Home Depot USA Inc		M140-WAYSIDE SIGNALS	$	356.04	$ -	$ -
4500076455	7/13/2026	Merrimac Petroleum Inc	Woman Owned Business	A120-AUTO/TRUCK GASOLINE	$	3,193.97	$ -	$ -
4500076456	7/14/2026	Siemens Mobility, Inc.		R190-RAIL/LRV PANTOGRAPH	$	1,788.65	$ -	$ -
4500076457	7/14/2026	Western-Cullen-Hayes Inc		M130-CROSSING MECHANISM	$	840.45	$ -	$ -
4500076458	7/14/2026	Transit Holdings Inc		B160-BUS ELECTRICAL	$	170.42	$ -	$ -
4500076459	7/14/2026	MJ Service Industries LLC	Disabled Veteran Business	G200-OFFICE SUPPLIES	$	4,337.24	$ -	$ -
4500076460	7/14/2026	W.W. Grainger Inc		B250-BUS REPAIR PARTS	$	3,229.27	$ -	$ -
4500076461	7/14/2026	Day Management Corp		G200-OFFICE SUPPLIES	$	1,327.31	$ -	$ -
4500076462	7/14/2026	Southwestern Community College Dist		P490-MANAGEMENT TRAINING	$	655.12	$ -	$ -
4500076463	7/14/2026	Mohawk Mfg & Supply Co		B200-BUS PWR TRAIN EQUIP	$	236.62	$ -	$ -
4500076464	7/14/2026	Transit Holdings Inc		B130-BUS BODY	$	667.87	$ -	$ -
4500076465	7/14/2026	Carey L. Brooks		P490-MANAGEMENT TRAINING	$	972.00	$ -	$ -
4500076466	7/14/2026	County of San Diego		P130-EQUIP MAINT REPR SVC	$	331.41	$ -	$ -
4500076467	7/14/2026	Prudential Overall Supply		G140-SHOP SUPPLIES	$	1,396.44	$ -	$ -
4500076468	7/14/2026	MJ Service Industries LLC	Disabled Veteran Business	G200-OFFICE SUPPLIES	$	4,337.24	$ -	$ -
4500076469	7/14/2026	L. B. Foster Company		T110-TRACK, RAIL	$	5,274.92	$ -	$ -
4500076470	7/14/2026	RS Americas, Inc.		M150-PWR SWITCHES/LOCKS	$	419.45	$ -	$ -
4500076471	7/14/2026	DGB Counseling and Consulting Inc		P490-MANAGEMENT TRAINING	$	360.00	$ -	$ -
4500076472	7/14/2026	VCA Animal Hospitals, Inc.		G120-SECURITY	$	164.40	$ -	$ -
4500076473	7/15/2026	Waxie's Enterprises, LLC		G180-JANITORIAL SUPPLIES	$	491.34	$ -	$ -
4500076474	7/15/2026	Transit Holdings Inc		B130-BUS BODY	$	143.70	$ -	$ -
4500076475	7/15/2026	Transit Holdings Inc		B130-BUS BODY	$	330.57	$ -	$ -
4500076476	7/15/2026	Uline Inc		G210-OFFICE FURNITURE	$	600.19	$ -	$ -
4500076477	7/15/2026	Transit Holdings Inc		B250-BUS REPAIR PARTS	$	223.11	$ -	$ -
4500076478	7/15/2026	Transit Holdings Inc		B140-BUS CHASSIS	$	3,915.10	$ -	$ -
4500076479	7/15/2026	Transit Holdings Inc		B160-BUS ELECTRICAL	$	263.51	$ -	$ -
4500076480	7/15/2026	Airgas Inc		G140-SHOP SUPPLIES	$	63.10	$ -	$ -
4500076481	7/15/2026	Applied Industrial		G140-SHOP SUPPLIES	$	985.92	$ -	$ -
4500076482	7/15/2026	B and H Photo and Electronics		R160-RAIL/LRV ELECTRICAL	$	2,246.59	$ -	$ -
4500076483	7/15/2026	Bear Communicatons, Inc.		R150-RAIL/LRV COMM EQUIP	$	2,148.45	$ -	$ -
4500076484	7/15/2026	Clarran Inc.	DBE	G140-SHOP SUPPLIES	$	756.84	$ -	$ -
4500076485	7/15/2026	Crossline Supply, LLC		B200-BUS PWR TRAIN EQUIP	$	3,040.71	$ -	$ -
4500076486	7/15/2026	Cummins Inc		B250-BUS REPAIR PARTS	$	3,240.97	$ -	$ -
4500076487	7/15/2026	Data Alliance Inc		R150-RAIL/LRV COMM EQUIP	$	52.64	$ -	$ -
4500076488	7/15/2026	Cummins Inc		B200-BUS PWR TRAIN EQUIP	$	7,990.74	$ -	$ -
4500076489	7/15/2026	Freeby Signs		B130-BUS BODY	$	203.43	$ -	$ -
4500076490	7/15/2026	Don Oleson Inc	Small Business	G140-SHOP SUPPLIES	$	142.23	$ -	$ -
4500076491	7/15/2026	D's Kustom Sales & Services, LLC		T110-TRACK, RAIL	$	1,293.00	$ -	$ -
4500076492	7/15/2026	E W Truck & Equipment Co Inc		B130-BUS BODY	$	899.93	$ -	$ -
4500076493	7/15/2026	Fastenal Company		G140-SHOP SUPPLIES	$	439.50	$ -	$ -
4500076494	7/15/2026	General Signals Inc		M130-CROSSING MECHANISM	$	7,693.35	$ -	$ -
4500076495	7/15/2026	Genfare, LLC		B250-BUS REPAIR PARTS	$	1,182.76	$ -	$ -
4500076496	7/15/2026	Gillig LLC		B130-BUS BODY	$	3,641.69	$ -	$ -
4500076497	7/15/2026	Transit Holdings Inc		B250-BUS REPAIR PARTS	$	4,043.96	$ -	$ -
4500076498	7/15/2026	San Diego Friction Products, Inc.		B250-BUS REPAIR PARTS	$	2,668.21	$ -	$ -
4500076499	7/15/2026	Muncie Reclamation and Supply Co		B130-BUS BODY	$	1,868.10	$ -	$ -

4500076500	7/15/2026	Transit Holdings Inc		B160-BUS ELECTRICAL	$	3,189.92	$ -	$ -
4500076501	7/15/2026	Mcmaster-Carr Supply Co		M110-SUB STATION	$	454.84	$ -	$ -
4500076502	7/15/2026	Staples Contract & Commercial LLC		G200-OFFICE SUPPLIES	$	118.92	$ -	$ -
4500076503	7/15/2026	Norman Industrial Materials Inc.		G140-SHOP SUPPLIES	$	256.42	$ -	$ -
4500076504	7/15/2026	Dimensional Silk Screen Inc		G230-PRINTED MATERIALS	$	327.56	$ -	$ -
4500076505	7/16/2026	Transit Holdings Inc		B120-BUS MECHANICAL PARTS	$	314.09	$ -	$ -
4500076506	7/16/2026	Waxie's Enterprises, LLC		G180-JANITORIAL SUPPLIES	$	685.29	$ -	$ -
4500076507	7/16/2026	Transit Holdings Inc		B120-BUS MECHANICAL PARTS	$	759.66	$ -	$ -
4500076508	7/16/2026	Cummins Inc		B250-BUS REPAIR PARTS	$	493.57	$ -	$ -
4500076509	7/16/2026	KLI Midco LLC		G170-LUBRICANTS	$	31,099.23	$ -	$ -
4500076510	7/16/2026	Transit Holdings Inc		B140-BUS CHASSIS	$	5,428.94	$ -	$ -
4500076511	7/16/2026	Signal Hill Auto Enterprises, Inc.		G180-JANITORIAL SUPPLIES	$	734.86	$ -	$ -
4500076512	7/16/2026	San Diego Friction Products, Inc.		B120-BUS MECHANICAL PARTS	$	2,963.41	$ -	$ -
4500076513	7/16/2026	Mcmaster-Carr Supply Co		B250-BUS REPAIR PARTS	$	87.11	$ -	$ -
4500076514	7/16/2026	Network Industries, Inc.		P130-EQUIP MAINT REPR SVC	$	3,079.83	$ -	$ -
4500076515	7/16/2026	EDCO Disposal Corporation		S130-DISPOSAL, OTHER	$	420.00	$ -	$ -
4500076516	7/16/2026	Home Depot USA Inc		G140-SHOP SUPPLIES	$	33.04	$ -	$ -
4500076517	7/16/2026	B & S Graphics Inc		B130-BUS BODY	$	312.74	$ -	$ -
4500076518	7/16/2026	Clarran Inc.	DBE	G140-SHOP SUPPLIES	$	431.00	$ -	$ -
4500076519	7/16/2026	Cummins Inc		B120-BUS MECHANICAL PARTS	$	733.01	$ -	$ -
4500076520	7/16/2026	Gillig LLC		B140-BUS CHASSIS	$	1,529.56	$ -	$ -
4500076521	7/16/2026	Hitachi Rail STS USA, Inc.		M150-PWR SWITCHES/LOCKS	$	3,473.11	$ -	$ -
4500076522	7/16/2026	Home Depot USA Inc		G290-FARE REVENUE EQUIP	$	218.19	$ -	$ -
4500076523	7/16/2026	ABC General Contractor, Inc.		C110-GENERAL CONTRACTORS	$	19,901.65	$ -	$ 2,000.12
4500076524	7/16/2026	The Gordian Group, Inc.		C120-SPECIALTY CONTRACTOR	$	350.27	$ -	$ -
4500076525	7/16/2026	2BFueled LLC		A120-AUTO/TRUCK GASOLINE	$	18,536.10	$ -	$ -
4500076526	7/16/2026	Cummins Inc		B120-BUS MECHANICAL PARTS	$	8,252.64	$ -	$ -
4500076527	7/16/2026	W. Baker Management Inc		R160-RAIL/LRV ELECTRICAL	$	10,964.64	$ -	$ -
4500076528	7/16/2026	Cummins Inc		B200-BUS PWR TRAIN EQUIP	$	4,806.73	$ -	$ -
4500076529	7/16/2026	ezCater, Inc		G250-NOVELTIES & AWARDS	$	541.22	$ -	$ -
4500076530	7/16/2026	Init Innovations in Transportation		G290-FARE REVENUE EQUIP	$	1,155.10	$ -	$ -
4500076531	7/16/2026	Init Innovations in Transportation		G290-FARE REVENUE EQUIP	$	637.90	$ -	$ -
4500076532	7/16/2026	Init Innovations in Transportation		G290-FARE REVENUE EQUIP	$	2,767.05	$ -	$ -
4500076533	7/16/2026	Transit Holdings Inc		B250-BUS REPAIR PARTS	$	64.19	$ -	$ -
4500076534	7/16/2026	KOI Wellness Inc		P480-EE MAINTENANCE	$	13,505.00	$ -	$ -
4500076535	7/16/2026	Vern Rose Inc		G140-SHOP SUPPLIES	$	363.07	$ -	$ -
4500076536	7/17/2026	Waxie's Enterprises, LLC		G180-JANITORIAL SUPPLIES	$	30.17	$ -	$ -
4500076537	7/17/2026	Transit Holdings Inc		B140-BUS CHASSIS	$	155.16	$ -	$ -
4500076538	7/17/2026	Transit Holdings Inc		B200-BUS PWR TRAIN EQUIP	$	3,059.24	$ -	$ -
4500076539	7/17/2026	Blue Angel International LLC	Small Business	G190-SAFETY/MED SUPPLIES	$	1,071.90	$ -	$ -
4500076540	7/17/2026	Transit Holdings Inc		B130-BUS BODY	$	1,331.89	$ -	$ -
4500076541	7/17/2026	Daniels Tire Service, Inc		A110-AUTO/TRUCK TIRES	$	2,786.06	$ -	$ -
4500076542	7/17/2026	Radwell International LLC		M110-SUB STATION	$	1,387.06	$ -	$ -
4500076543	7/17/2026	Graybar Electric Co Inc		M180-STATION ELECTRICAL	$	274.41	$ -	$ -
4500076544	7/17/2026	Cummins Inc		B200-BUS PWR TRAIN EQUIP	$	467.06	$ -	$ -
4500076545	7/17/2026	Transit Holdings Inc		B130-BUS BODY	$	477.73	$ -	$ -
4500076546	7/17/2026	Home Depot USA Inc		F110-SHOP/BLDG MACHINERY	$	364.23	$ -	$ -
4500076547	7/17/2026	The Infurmary Veterinary		G120-SECURITY	$	480.96	$ -	$ -
4500076548	7/17/2026	Ace Uniforms LLC	Small Business	G130-SHOP TOOLS	$	123.92	$ -	$ -

4500076549	7/17/2026	Global Equipment Company	Small Business	F110-SHOP/BLDG MACHINERY	$ 493.23	$ -	$ -
4500076550	7/17/2026	Transit Holdings Inc		B250-BUS REPAIR PARTS	$ 9,576.67	$ -	$ -
4500076551	7/17/2026	Continental Locks		F150-DOORS, OVERHEAD	$ 199.69	$ -	$ -
4500076553	7/20/2026	Transit Holdings Inc		B140-BUS CHASSIS	$ 1,460.91	$ -	$ -
4500076554	7/20/2026	Transit Holdings Inc		B140-BUS CHASSIS	$ 2,813.92	$ -	$ -
4500076555	7/20/2026	Transit Holdings Inc		B160-BUS ELECTRICAL	$ 1,416.86	$ -	$ -
4500076556	7/20/2026	Transit Holdings Inc		B120-BUS MECHANICAL PARTS	$ 266.21	$ -	$ -
4500076557	7/20/2026	Transit Holdings Inc		B160-BUS ELECTRICAL	$ 8,088.61	$ -	$ -
4500076558	7/20/2026	James W. Doering		P180-LEASES, OTHER	$ 40,352.88	$ -	$ -
4500076559	7/20/2026	W.W. Grainger Inc		B250-BUS REPAIR PARTS	$ 1,827.09	$ -	$ -
4500076560	7/20/2026	Waxie's Enterprises, LLC		G180-JANITORIAL SUPPLIES	$ 2,046.95	$ -	$ -
4500076561	7/20/2026	Waxie's Enterprises, LLC		G140-SHOP SUPPLIES	$ 601.54	$ -	$ -
4500076562	7/20/2026	Dimensional Silk Screen Inc		G230-PRINTED MATERIALS	$ 969.75	$ -	$ -
4500076563	7/20/2026	RJ International LLC	DBE	G140-SHOP SUPPLIES	$ 1,680.91	$ -	$ -
4500076564	7/20/2026	Clarran Inc.	DBE	G150-FASTENERS	$ 81.17	$ -	$ -
4500076565	7/20/2026	2BFueled LLC		A120-AUTO/TRUCK GASOLINE	$ 16,183.13	$ -	$ -
4500076566	7/20/2026	Southern Counties Oil Co, LP		A120-AUTO/TRUCK GASOLINE	$ 3,427.74	$ -	$ -
4500076567	7/20/2026	Consensus Cloud Solutions, Inc.		I110-INFORMATION TECH	$ 4,380.00	$ -	$ -
4500076568	7/21/2026	CDW LLC		I110-INFORMATION TECH	$ 3,770.75	$ -	$ -
4500076569	7/21/2026	CDW LLC		I110-INFORMATION TECH	$ 2,895.96	$ -	$ -
4500076570	7/21/2026	ODP Business Solutions, LLC		G200-OFFICE SUPPLIES	$ 745.04	$ -	$ -
4500076571	7/21/2026	Radwell International LLC		M110-SUB STATION	$ 19,808.97	$ -	$ -
4500076572	7/21/2026	Transit Holdings Inc		B200-BUS PWR TRAIN EQUIP	$ 2,524.48	$ -	$ -
4500076573	7/21/2026	Waxie's Enterprises, LLC		G180-JANITORIAL SUPPLIES	$ 648.05	$ -	$ -
4500076574	7/21/2026	Transit Holdings Inc		B200-BUS PWR TRAIN EQUIP	$ 1,069.01	$ -	$ -
4500076575	7/21/2026	Blue Angel International LLC	Small Business	G190-SAFETY/MED SUPPLIES	$ 411.18	$ -	$ -
4500076576	7/21/2026	Transit Holdings Inc		B160-BUS ELECTRICAL	$ 196.23	$ -	$ -
4500076577	7/21/2026	Transit Holdings Inc		B140-BUS CHASSIS	$ 581.61	$ -	$ -
4500076578	7/21/2026	Genuine Parts Company Inc		B250-BUS REPAIR PARTS	$ 339.19	$ -	$ -
4500076579	7/21/2026	Siemens Mobility, Inc.		R120-RAIL/LRV CAR BODY	$ 4,783.25	$ -	$ -
4500076580	7/21/2026	W.W. Grainger Inc		R220-RAIL/LRV TRUCKS	$ 1,293.70	$ -	$ -
4500076582	7/21/2026	Jamaica Bearings Co Inc		R220-RAIL/LRV TRUCKS	$ 17,874.95	$ -	$ -
4500076583	7/21/2026	San Diego Friction Products, Inc.		B120-BUS MECHANICAL PARTS	$ 4,285.06	$ -	$ -
4500076585	7/21/2026	MJ Service Industries LLC	Disabled Veteran Business	M140-WAYSIDE SIGNALS	$ 99.13	$ -	$ -
4500076586	7/21/2026	Professional Contractors Supplies		G140-SHOP SUPPLIES	$ 805.97	$ -	$ -
4500076587	7/21/2026	Prochem Specialty Products Inc	Small Business	G180-JANITORIAL SUPPLIES	$ 977.83	$ -	$ -
4500076588	7/21/2026	Fastenal Company		G130-SHOP TOOLS	$ 159.04	$ -	$ -
4500076589	7/21/2026	Hitachi Rail STS USA, Inc.		M130-CROSSING MECHANISM	$ 4,318.62	$ -	$ -
4500076590	7/21/2026	Staples Contract & Commercial LLC		G180-JANITORIAL SUPPLIES	$ 165.33	$ -	$ -
4500076591	7/21/2026	Init Innovations in Transportation		G290-FARE REVENUE EQUIP	$ 1,586.10	$ -	$ -
4500076592	7/21/2026	Init Innovations in Transportation		B190-BUS FARE EQUIP	$ 702.55	$ -	$ -
4500076593	7/21/2026	San Diego Friction Products, Inc.		B120-BUS MECHANICAL PARTS	$ 4,285.22	$ -	$ -
4500076594	7/21/2026	Siemens Mobility, Inc.		R190-RAIL/LRV PANTOGRAPH	$ 2,844.60	$ -	$ -
4500076595	7/21/2026	Schuko LLC		G260-MEDIA	$ 930.25	$ -	$ -
4500076596	7/21/2026	Siemens Mobility, Inc.		R200-RAIL/LRV SEATING	$ 10,236.25	$ -	$ -
4500076597	7/21/2026	Louis Sardo Upholstery Inc		B130-BUS BODY	$ 1,010.16	$ -	$ -
4500076598	7/22/2026	Freeby Signs		B130-BUS BODY	$ 21.55	$ -	$ -
4500076599	7/22/2026	Kurt Morgan		G200-OFFICE SUPPLIES	$ 401.85	$ -	$ -
4500076600	7/22/2026	Transit Holdings Inc		B120-BUS MECHANICAL PARTS	$ 1,274.30	$ -	$ -

4500076601	7/22/2026	Blue Angel International LLC	Small Business	G190-SAFETY/MED SUPPLIES	$ 137.06	$ -	$ -
4500076602	7/22/2026	Blue Angel International LLC	Small Business	G190-SAFETY/MED SUPPLIES	$ 164.47	$ -	$ -
4500076603	7/22/2026	Transit Holdings Inc		B160-BUS ELECTRICAL	$ 33.35	$ -	$ -
4500076604	7/22/2026	Romaine Electric Corporation		M130-CROSSING MECHANISM	$ 2,033.87	$ -	$ -
4500076605	7/22/2026	Cummins Inc		B200-BUS PWR TRAIN EQUIP	$ 749.27	$ -	$ -
4500076606	7/22/2026	Muncie Reclamation and Supply Co		B250-BUS REPAIR PARTS	$ 10,141.39	$ -	$ -
4500076607	7/22/2026	Transit Holdings Inc		B140-BUS CHASSIS	$ 5,469.47	$ -	$ -
4500076608	7/22/2026	Vehicle Maintenance Program, Inc.	Woman Owned Business	B140-BUS CHASSIS	$ 4,569.53	$ -	$ -
4500076609	7/22/2026	Vern Rose Inc		G140-SHOP SUPPLIES	$ 306.12	$ -	$ -
4500076610	7/22/2026	Transit Holdings Inc		B250-BUS REPAIR PARTS	$ 481.85	$ -	$ -
4500076611	7/22/2026	Gillig LLC		B250-BUS REPAIR PARTS	$ 151.02	$ -	$ -
4500076612	7/22/2026	Gillig LLC		B120-BUS MECHANICAL PARTS	$ 5,061.81	$ -	$ -
4500076613	7/22/2026	TK Services Inc		INSURANCE-Insurance Stock	$ 30,027.01	$ -	$ -
4500076614	7/22/2026	Cummins Inc		B200-BUS PWR TRAIN EQUIP	$ 3,515.18	$ -	$ -
4500076615	7/22/2026	Cummins Inc		B250-BUS REPAIR PARTS	$ 403.73	$ -	$ -
4500076616	7/22/2026	Transit Holdings Inc		B140-BUS CHASSIS	$ 464.32	$ -	$ -
4500076617	7/22/2026	San Diego Friction Products, Inc.		B250-BUS REPAIR PARTS	$ 2,436.11	$ -	$ -
4500076618	7/22/2026	Clarran Inc.	DBE	G150-FASTENERS	$ 270.68	$ -	$ -
4500076620	7/22/2026	Clarran Inc.	DBE	G150-FASTENERS	$ 296.73	$ -	$ -
4500076621	7/22/2026	Staples Contract & Commercial LLC		G200-OFFICE SUPPLIES	$ 429.76	$ -	$ -
4500076622	7/22/2026	Genuine Parts Company Inc		B250-BUS REPAIR PARTS	$ 439.49	$ -	$ -

The U.S. Department of Transportation (USDOT) has issued an Interim Final Rule (IFR) that makes changes to the Disadvantaged Business Enterprise (DBE) program effective October 3, 2025. These changes affect how DBE firms become certified, how existing DBE firms maintain certification, and how recipients like MTS may count DBE participation. For any firms that are listed to have a DBE certification, the DBE certification is based on the old certification standards prior to October 3, 2025. MTS is currently reviewing the IFR and working with our funding agencies to identify what program and procedural changes may be necessary

EXPENSE CONTRACTS				
Doc #	**Organization**	**Subject**	**Amount**	**Day**
B0792.0-26	EW TRUCK	BUS ENGINE PARTS	$7,572.08	6/23/2026
L1709.1-26	MOLINA MFG	ADHESIVE SURCHARGE	$5,199.11	6/23/2026
PWB414.2-25	FORDYCE	ECBMF BATTERY STORAGE	$37,969.54	6/23/2026
PWG347.0-22JOC347-49	ABCGC	PARK AND MARKET VALIDATORS	$19,901.65	6/23/2026
L1601.1-22	KNORR BRAKE COMPANY	ADD TARIFF FUNDS	$36,204.00	7/1/2026
B0746.6-22	NEW FLYER	PRICE ADJUSTMENT	$104,341.71	7/21/2026

REVENUE CONTRACTS, RIGHT of ENTRY PERMITS, AND MOUs				
Doc #	**Organization**	**Subject**	**Amount**	**Day**
S200-23-825.3	WEST COAST GENERAL GROUP	BORDER TO BAYSHORE BIKEWAY PROJECT TIME EXT	$750.00	6/24/2026
S200-23-825.4	WEST COAST GENERAL GROUP	BORDER TO BAYSHORE PKWY PROJECT	$1,500.00	6/24/2026
S200-26-931	S.C. VALLEY ENGINEERING, INC.	COMMERCIAL STREET POTHOLING	$750.00	6/25/2026

Metropolitan Transit System

Agenda Item No. 05

MEETING OF THE SAN DIEGO METROPOLITAN TRANSIT SYSTEM
BOARD OF DIRECTORS

July 30, 2026

SUBJECT:

Building C Crane Replacement – Work Order Agreement

RECOMMENDATION:

That the San Diego Metropolitan Transit System (MTS) Board of Directors authorize the Chief Executive Officer (CEO) to execute Work Order No. MTSJOC441-06 under MTS Doc. PWG441.0-25 (in substantially the same format as Attachment A), with ABC General Contractor, Inc. (ABCGC), in the amount of $338,841.87 for the removal and replacement of both overhead bridge cranes serving Trolley Maintenance Building C with higher-capacity cranes.

Budget Impact

The total cost of this contract is estimated to be $338,841.87. Under separate MTS Doc No. L1282.0-16, with the Gordian Group, MTS will pay a 1.76% JOC software license fee in the amount of $5,963.62. The project will be funded by Capital Improvement Program (CIP) 2006129301 – Building C Crane Replacement.

DISCUSSION:

Trolley Building C has two existing 7.5-ton bridge cranes that serve the trolley brake and wheel truing areas. These cranes were sized for the original trolley bogies; however, the weight of the modern trolley bogies is substantially higher, giving MTS personnel less control over the aerial movement of bogies throughout the shop. This project will allow for the complete removal and replacement of both overhead bridge cranes, including the steel bridges and winch motors, with new 10-ton cranes to allow for better control and safer movement throughout MTS Trolley Maintenance Building C. This project will also include a structural evaluation of all surrounding supporting steel to ensure that it is in, and will remain in, a state of good repair.

JOC is a procurement method under which public agencies may accomplish frequently encountered repairs, maintenance, and construction projects through a single, competitively procured long-term agreement.

The JOC program includes a catalog of pricing for a variety of potential tasks to be performed under the contract that has been pre-priced by the contractor, the Gordian Group. All potential contractors are subject to pricing within this catalog. Each contractor then includes an

adjustment factor, escalating their proposed price from the catalog price, to determine the total cost of the task order. The adjustment factor represents an average percentage increase over the catalog price (i.e., 1.25 adjustment factor represents 25% above the catalog price) for that respective task within the project. In order to select the lowest responsive and responsible bidder, MTS staff compares each contractor's proposed adjustment factor.

On September 24, 2025, MTS issued an Invitation for Bids (IFB) seeking a contractor to provide JOC building and facilities construction services that primarily consist of repair, remodeling, or other repetitive work, and general building and facility contracting services. These services include, but are not limited to, demolition, maintenance, and modification of existing buildings and facilities, as well as any required incidental professional and technical services.

Five (5) bids were received, and MTS determined that ABCGC was the lowest responsive and responsible bidder. On December 18, 2025 (Agenda Item (AI) 7), the MTS Board authorized the CEO to execute MTS Doc. No. PWG441.0-25 with ABCGC for General Building Construction Services. Today's work order will be issued under this master agreement.

Today's proposed action would issue a work order to ABCGC under their JOC Building and Facilities Construction Services master agreement. ABCGC and its subcontractor will provide all materials, labor, and equipment for the Building C Crane Replacement. Pricing for this repair work order was reviewed and determined to be fair and reasonable.

Work is expected to be completed within one hundred twenty (120) days of issuance of the notice to proceed.

ABCGC will utilize the following subcontractor for this project:

Subcontractor Name	Subcontractor Certification	Subcontractor Amount
Cummins Industries Inc. (DBA, North American Crane Company)	None	$95,521.50

This work order is not subject to the Project Labor Agreement (PLA) approved under Board Policy No. 66 because it is a work order under $1,000,000.00.

Therefore, staff recommends that the MTS Board of Directors authorize the CEO to execute Work Order No. MTSJOC441-06 under MTS Doc. PWG441.0-25 (in substantially the same format as Attachment A), with ABCGC, in the amount of $338,841.87 for the removal and replacement of both overhead bridge cranes serving Trolley Maintenance Building C with higher-capacity cranes.

/s/ Sharon Cooney
Sharon Cooney
Chief Executive Officer

Key Staff Contact: Julia Tuer, 619.557.4515, Julia.Tuer@sdmts.com

Attachment: A. Draft Work Order MTSJOC441-06

Metropolitan Transit System

JOB ORDER CONTRACT
WORK ORDER

PWG441.0-25
CONTRACT NUMBER

MTSJOC441-06
WORK ORDER NUMBER

THIS AGREEMENT is entered into this _____ day of _____ 2026, in the state of California by and between San Diego Metropolitan Transit System ("MTS"), a California public agency, and the following, hereinafter referred to as "Contractor":

Name: ABC General Construction, Inc. Address: 1941 Friendship Drive, Ste F

Form of Business: Corporation El Cajon, CA 92020
(Corporation, partnership, sole proprietor, etc.)

Telephone: 619-937-1010

Authorized person to sign contracts: Travis Brozowski CEO
Name Title

Pursuant to the existing Job Order Contract (MTS Doc. No. PWG441.0-25), MTS issues a Work Order to Contractor to complete the detailed Scope of Work (attached as Exhibit A.), the Cost Breakdown for the Scope of Work (attached as Exhibit B.), and the subcontractor listing form applicable to this Work Order (attached as Exhibit C.)

TOTAL PAYMENTS TO CONTRACTOR SHALL NOT EXCEED $338,841.87

SAN DIEGO METROPOLITAN TRANSIT SYSTEM	ABC GENERAL CONTRACTOR, INC.
By: _____ Sharon Cooney, Chief Executive Officer	Firm: _____
Approved as to form:	By: _____ Signature
By: _____ Karen Landers, General Counsel	Title: _____

DRAFT

EXHIBIT A
(Scope of Work)

DRAFT

San Diego Metropolitan Transit System
1255 Imperial Ave
San Diego, California 92101

Final Scope of Work

Date: 6/29/2026

Job Order Contracting

To: Travis Brozowski
ABC General Inc.
3120 National Ave
San Diego, CA 92113
(619) 239-3428
travis@abcgeneralinc.com

From: Noah Cappadocia
San Diego Metropolitan Transit System
1255 Imperial Ave
San Diego, CA 92101
(619) 557-4576
Noah.Cappadocia@sdmts.com

Contract Number: PWG441.0-25

Job Order Number: MTSJOC441-06

Job Order Title: Building C Crane Replacement

Location: Building C
1535 Newton Ave Yard Tower, & Paint Booth
San Diego, CA 92113

Brief Scope of Work:

DRAFT

The following items detail the scope of work as discussed at the site. All requirements necessary to accomplish the items set forth below shall be considered part of this scope of work.

SECTION 7- SCOPE OF WORK/MINIMUM TECHNICAL SPECIFICATIONS

** License C61 / D21

SECTION 7-1 GENERAL

The two existing 7.5-ton bridge cranes in Building C in the trolley maintenance yard have reached the end of their useful life, as well as their maximum capacity. Both cranes and bridges are in need of replacement and capacity upgrade from 7.5 ton to 10 ton.

All work is to occur at the Building C Trolley Maintenance building located at 1535 Newton Ave, San Diego, CA 92113

SECTION 7-2 STAGING

Contractor is to keep and store all materials within a predesignated laydown area. Size and location of the laydown area is to be coordinated with the MTS Project Manager. All property stored onsite is the responsibility of the

contractor and MTS shall not be held liable for any and all equipment, material, tools, etc. All deliveries to the site shall be coordinated through the MTS Project Manager. Only vehicles necessary for that day's controlling activities may be parked onsite adjacent to the work area. Remaining vehicles are to be park on adjacent streets and public parking areas.

SECTION 7-3 TEMP FACILITIES

The contractor may use MTS restrooms and hand washing facilities for their employees, subcontractors, and suppliers throughout the duration of the project. Contractor is responsible for providing their own temporary power and water used in relation to the construction.

SECTION 7-4 SAFETY

Diligent caution must be taken during the undertaking of this work. Due to the 24-hour nature of operations at Building C extreme caution must be observed while driving on the lot and working at Building C. Work areas, laydown areas, equipment, or tools left overnight must be appropriately marked off with a suitable combination of delineators, caution tape, and/or A-frames and/or temp fencing. At the end of each day the entirety of the area being worked on must be clean, free of hazards, and contained in agreed work and laydown areas. Contractors must be aware of their surroundings at all times. .

Contractors, subcontractors, vendors and suppliers are to adhere to the speed limit, stop at all stop signs, and stop at all crosswalks. Failure to do so will result in MTS not granting any future vehicular access to the Building C property.

SECTION 7-5 WASTE

The contractor is responsible for legally disposing of any and all waste in relation to the work. The contractor shall not use any MTS receptacles to dispose of material generated during the performance of this contract. Contractor is responsible for general cleanup at the end of each work day and the Contractor is to perform a final clean to meet the current condition and cleanliness of the on-site paving.

SECTION 7-6 SUBMITTALS

The contractor shall provide submittals showing product data, details, and necessary information for all items described in the project specifications.

SECTION 7-7 DRAWINGS

There are known As-builts for the area where the work is to occur, however; there is no information regarding the existing crane system present. Serial numbers were cross checked to confirm current bridges cannot support 10-ton cranes.

DRAFT

SECTION 7-8 SCHEDULE AND SEQUENCING

All base bid work shall be completed within one hundred twenty (120) calendar days from issuance of the Notice to Proceed. Limited Notice to Proceed shall be issued if necessary to facilitate ordering of equipment prior to issuance of full NTP.

The base bid work consists of two phases; the first phase must be completed in its entirety before the second phase may begin. Each bridge crane is considered a phase from demolition to installation and certification. The contractor will be responsible for coordination of which crane will act as phase 1 and phase 2.

It is required that there is 1 bridge crane in service at all times.

SECTION 7-9 Building C Crane Removal

Contractor is to fully demo and dispose of both existing 7.5-ton cranes and their associated bridges and appurtenances. Demo of cranes includes safe off of existing electrical serving the 7.5-ton cranes. Contractor is to provide and install 2 new 10-ton cranes and bridges in the same location including reconnection of all necessary electrical.

It is assumed that the existing bridge track is suitable for reuse, but it is the contractor's responsibility to verify the integrity of the track system and verify the ability for it to be reused.

Contractor will fully demolish and install cranes 1 at a time so that there is consistently 1 crane available for use. Contractor is also responsible for all associated electrical work for the demolition of, and installation of the new cranes.

All job orders include the labor, equipment, and material costs for a complete and in-place installation, unless otherwise noted.

DRAFT

EXHIBIT B
(Cost Breakdown)

DRAFT

Price Proposal Detail Report

By Division
Version: 2.0
Approved
Proposal Value: $338,841.87
Approved Date: June 9, 2026

Catalog: August 2025 - SDMTS, General Building and Facilities Construction Services

Job Order: MTSJOC441-06

Job Order Name: Building C Crane Replacement

Location: Building C 1535 Newton Ave San Diego, CA 92113

Contractor: ABC General Inc.
Contract Number: PWG441.0-25
Contract Name: JOC General Building and Facilities Construction Services

Division		Install Total	NPP Total	Demo Total	Division Total
01	General Requirements	$125,135.81	$0.00	$0.00	$125,135.81
05	Metals	$133,234.95	$0.00	$14,848.65	$148,083.60
14	Conveying Equipment	$11,989.25	$0.00	$0.00	$11,989.25
26	Electrical	$25,011.68	$0.00	$0.00	$25,011.68
41	Material Processing and Handling Equipment	$27,526.49	$0.00	$1,095.04	$28,621.53
	Total:	**$322,898.18**	**$0.00**	**$15,943.69**	**$338,841.87**

Line Count: 27 **Proposal Total: $338,841.87**

Total Reflects Filtered Statuses: Added, Clarification Requested, Clarified, Confirmed Removal, Modified, No Change, OverRuled, Rejected, Removed, Retained, System Removal Acknowledged by Contractor, System Removal Acknowledged by Owner, System Removed

The Percentage of Non Pre-Priced on this Proposal: 0.0%

DRAFT

** Includes Price Changes due to Construction Task Catalog update*

Price Proposal Detail Report

By Division
Version: 2.0
Approved
Proposal Value: $338,841.87
Approved Date: June 9, 2026

Catalog: August 2025 - SDMTS, General Building and Facilities Construction Services

Job Order: MTSJOC441-06

Job Order Name: Building C Crane Replacement

Location: Building C 1535 Newton Ave San Diego, CA 92113

Contractor: ABC General Inc.
Contract Number: PWG441.0-25
Contract Name: JOC General Building and Facilities Construction Services

---

01 General Requirements **$125,135.81**

Record #	CSI Number	Description	Type	Quantity	Unit Price	UOM	Factor	Line Total
1	012220000010	Electrician		160.00	$101.62	HR	0.8500	$13,820.32

Accepted *History: 1.1 Added,1.2 Modified,1.3 Accepted,2.0 Accepted*

Includes Labor Yes **Includes Equipment No** **Includes Materials No**

User Note: safe off and hot cranes

Item Note: For tasks not included in the Construction Task Catalog® and as directed by owner only.

Total: $13,820.32

Division 01 General Requirements Total: $13,820.32

Record #	CSI Number	Description	Type	Quantity	Unit Price	UOM	Factor	Line Total
2	012220000010	For Foreperson, Add **MOD: 0001**		80.00	$5.08	HR	0.8500	$345.44

Accepted *History: 1.1 Added,1.2 Modified,1.3 Accepted,2.0 Accepted*

Includes Labor Yes **Includes Equipment No** **Includes Materials No**

Total: $345.44

Division 01 General Requirements Total: $345.44

Record #	CSI Number	Description	Type	Quantity	Unit Price	UOM	Factor	Line Total
3	012220000047	Structural Steel Worker		160.00	$113.33	HR	0.8500	$15,412.88

Accepted *History: 1.2 Added,1.3 Accepted,2.0 Accepted*

Includes Labor Yes **Includes Equipment No** **Includes Materials No**

Item Note: For tasks not included in the Construction Task Catalog® and as directed by owner only.

Total: $15,412.88

Division 01 General Requirements Total: $15,412.88

DRAFT

** Includes Price Changes due to Construction Task Catalog update*

Price Proposal Detail Report

By Division
Version: 2.0
Approved
Proposal Value: $338,841.87
Approved Date: June 9, 2026

Catalog: August 2025 - SDMTS, General Building and Facilities Construction Services

Job Order: MTSJOC441-06

Job Order Name: Building C Crane Replacement

Location: Building C 1535 Newton Ave San Diego, CA 92113

Contractor: ABC General Inc.
Contract Number: PWG441.0-25
Contract Name: JOC General Building and Facilities Construction Services

Record #	CSI Number	Description	Type	Quantity	Unit Price	UOM	Factor	Line Total
4	012220000047	For Foreperson, Add MOD: 0001		80.00	$5.67	HR	0.8500	$385.56
Accepted		***History: 1.2 Added,1.3 Accepted,2.0 Accepted***						
		Includes Labor Yes	**Includes Equipment No**	**Includes Materials No**				

Total:	**$385.56**
Division 01 General Requirements Total:	**$385.56**

Record #	CSI Number	Description	Type	Quantity	Unit Price	UOM	Factor	Line Total
5	012220000083	Principal Engineer		40.00	$209.92	HR	0.8500	$7,137.28
Accepted		***History: 1.2 Added,1.3 Accepted,2.0 Accepted***						
		Includes Labor Yes	**Includes Equipment No**	**Includes Materials No**				

Item Note: For tasks not included in the Construction Task Catalog® and as directed by owner only.

Total:	**$7,137.28**
Division 01 General Requirements Total:	**$7,137.28**

Record #	CSI Number	Description	Type	Quantity	Unit Price	UOM	Factor	Line Total
6	012220000085	Engineer		110.00	$136.96	HR	0.8500	$12,805.76
Accepted		***History: 1.1 Added,1.2 Modified,1.3 Accepted,2.0 Accepted***						
		Includes Labor Yes	**Includes Equipment No**	**Includes Materials No**				

User Note: EXISTING STRUCTURE EVALUATION

Item Note: For tasks not included in the Construction Task Catalog® and as directed by owner only.

Total:	**$12,805.76**
Division 01 General Requirements Total:	**$12,805.76**

DRAFT

** Includes Price Changes due to Construction Task Catalog update*

Price Proposal Detail Report

By Division
Version: 2.0
Approved
Proposal Value: $338,841.87
Approved Date: June 9, 2026

Catalog: August 2025 - SDMTS, General Building and Facilities Construction Services

Job Order: MTSJOC441-06

Job Order Name: Building C Crane Replacement

Location: Building C 1535 Newton Ave San Diego, CA 92113

Contractor: ABC General Inc.
Contract Number: PWG441.0-25
Contract Name: JOC General Building and Facilities Construction Services

Record #	CSI Number	Description	Type	Quantity	Unit Price	UOM	Factor	Line Total
7	012223000058	25' Electric, Scissor Platform Lift		3.00	$262.37	DAY	0.8500	$669.04
Accepted		***History: 1.1 Added,1.2 Accepted,1.3 Accepted,2.0 Accepted***						

Includes Labor No **Includes Equipment No** **Includes Materials Yes**

User Note: Scissor Lift used during existing structure evaluation

Total: $669.04

Division 01 General Requirements Total: $669.04

Record #	CSI Number	Description	Type	Quantity	Unit Price	UOM	Factor	Line Total
8	012223000058	25' Electric, Scissor Platform Lift		8.00	$262.37	DAY	0.8500	$1,784.12
Accepted		***History: 1.1 Added,1.2 Accepted,1.3 Accepted,2.0 Accepted***						

Includes Labor No **Includes Equipment No** **Includes Materials Yes**

User Note: Scissor Lift for electrical upgrades (4 & 4)

Total: $1,784.12

Division 01 General Requirements Total: $1,784.12

Record #	CSI Number	Description	Type	Quantity	Unit Price	UOM	Factor	Line Total
9	012223000059	25' Electric, Scissor Platform Lift		3.00	$524.74	WK	0.8500	$1,338.09
Accepted		***History: 1.1 Added,1.2 Accepted,1.3 Accepted,2.0 Accepted***						

Includes Labor No **Includes Equipment No** **Includes Materials Yes**

User Note: Scissor Lift need for Crane & Monorail demo

Total: $1,338.09

Division 01 General Requirements Total: $1,338.09

DRAFT

** Includes Price Changes due to Construction Task Catalog update*

Price Proposal Detail Report

By Division
Version: 2.0
Approved
Proposal Value: $338,841.87
Approved Date: June 9, 2026

Catalog: August 2025 - SDMTS, General Building and Facilities Construction Services

Job Order: MTSJOC441-06

Job Order Name: Building C Crane Replacement

Location: Building C 1535 Newton Ave San Diego, CA 92113

Contractor: ABC General Inc.
Contract Number: PWG441.0-25
Contract Name: JOC General Building and Facilities Construction Services

Record #	CSI Number	Description	Type	Quantity	Unit Price	UOM	Factor	Line Total
10	012223001030	10,000 Lb. Capacity, Telescopic Boom, Hi-Reach, Rough Terrain Construction Forklift With Full-Time Operator		3.00	$6,853.87	WK	0.8500	$17,477.37
Accepted		***History: 1.1 Added,1.2 Accepted,1.3 Accepted,2.0 Accepted***						
			Includes Labor Yes	**Includes Equipment No**	**Includes Materials Yes**			
	User Note:	need for Crane & Monorail demo						
							Total:	**$17,477.37**
							Division 01 General Requirements Total:	**$17,477.37**

Record #	CSI Number	Description	Type	Quantity	Unit Price	UOM	Factor	Line Total
11	012223001417	12 To 14 CY Rear Dump Truck With Full-Time Truck Driver		8.00	$2,107.69	DAY	0.8500	$14,332.29
Accepted		***History: 1.1 Added,1.2 Accepted,1.3 Accepted,2.0 Accepted***						
			Includes Labor Yes	**Includes Equipment No**	**Includes Materials Yes**			
	User Note:	Hauling demo'd Crane & monorails, estimated at 4 loads each (8)						
							Total:	**$14,332.29**
							Division 01 General Requirements Total:	**$14,332.29**

Record #	CSI Number	Description	Type	Quantity	Unit Price	UOM	Factor	Line Total
12	013529000003	Trucking Delivery Of 40' Shipping Container		5,600.00	$5.40	MI	0.8500	$25,704.00
Accepted		***History: 1.1 Added,1.2 Accepted,1.3 Accepted,2.0 Accepted***						
			Includes Labor No	**Includes Equipment No**	**Includes Materials Yes**			
	User Note:	New Motors and Monorails from York PA (2,800 Miles x 2 loads)						
							Total:	**$25,704.00**
							Division 01 General Requirements Total:	**$25,704.00**

DRAFT

** Includes Price Changes due to Construction Task Catalog update*

Price Proposal Detail Report

By Division
Version: 2.0
Approved
Proposal Value: $338,841.87
Approved Date: June 9, 2026

Catalog: August 2025 - SDMTS, General Building and Facilities Construction Services

Job Order: MTSJOC441-06

Job Order Name: Building C Crane Replacement

Location: Building C 1535 Newton Ave San Diego, CA 92113

Contractor: ABC General Inc.
Contract Number: PWG441.0-25
Contract Name: JOC General Building and Facilities Construction Services

Record #	CSI Number	Description	Type	Quantity	Unit Price	UOM	Factor	Line Total
13	015626000005	Temporary 6' High Chain Link Fence And Posts, Up To 6 Months		500.00	$8.46	LF	0.8500	$3,595.50
Accepted		***History: 1.2 Added,1.3 Accepted,2.0 Accepted***						
		Includes Labor Yes	**Includes Equipment Yes**	**Includes Materials Yes**				

Total:	**$3,595.50**
Division 01 General Requirements Total:	**$3,595.50**

Record #	CSI Number	Description	Type	Quantity	Unit Price	UOM	Factor	Line Total
14	015626000162	Relocate Temporary 6' High Chain Link Fence And Posts		500.00	$5.41	LF	0.8500	$2,299.25
Accepted		***History: 1.2 Added,1.3 Accepted,2.0 Accepted***						
		Includes Labor Yes	**Includes Equipment Yes**	**Includes Materials No**				

Total:	**$2,299.25**
Division 01 General Requirements Total:	**$2,299.25**

Record #	CSI Number	Description	Type	Quantity	Unit Price	UOM	Factor	Line Total
15	017113000002	First 25 Miles, Equipment Delivery, Pickup, Mobilization And Demobilization Using A Rollback Flatbed Truck		1.00	$452.85	EA	0.8500	$384.92
Accepted		***History: 1.1 Added,1.2 Accepted,1.3 Accepted,2.0 Accepted***						
		Includes Labor Yes	**Includes Equipment Yes**	**Includes Materials No**				

User Note: Scissor Lift delivered during existing structure evaluation

Item Note: Includes loading, tie-down of equipment, delivery of equipment, off loading on site, rigging, dismantling, loading for return and transporting away. For equipment such as trenchers, skid-steer loaders (bobcats), industrial warehouse forklifts, sweepers, scissor platform lifts, telescoping and articulating boom man lifts with up to 40' boom lengths, etc.

Total:	**$384.92**
Division 01 General Requirements Total:	**$384.92**

DRAFT

** Includes Price Changes due to Construction Task Catalog update*

Price Proposal Detail Report

By Division
Version: 2.0
Approved
Proposal Value: $338,841.87
Approved Date: June 9, 2026

Catalog: August 2025 - SDMTS, General Building and Facilities Construction Services

Job Order: MTSJOC441-06

Job Order Name: Building C Crane Replacement

Location: Building C 1535 Newton Ave San Diego, CA 92113

Contractor: ABC General Inc.
Contract Number: PWG441.0-25
Contract Name: JOC General Building and Facilities Construction Services

Record #	CSI Number	Description	Type	Quantity	Unit Price	UOM	Factor	Line Total
16	017113000002	First 25 Miles, Equipment Delivery, Pickup, Mobilization And Demobilization Using A Rollback Flatbed Truck		1.00	$452.85	EA	0.8500	$384.92

Accepted ***History: 1.1 Added,1.2 Accepted,1.3 Accepted,2.0 Accepted***

Includes Labor Yes **Includes Equipment Yes** **Includes Materials No**

User Note: Scissor Lift delivered electrical upgrades

Item Note: Includes loading, tie-down of equipment, delivery of equipment, off loading on site, rigging, dismantling, loading for return and transporting away. For equipment such as trenchers, skid-steer loaders (bobcats), industrial warehouse forklifts, sweepers, scissor platform lifts, telescoping and articulating boom man lifts with up to 40' boom lengths, etc.

Total:	**$384.92**
Division 01 General Requirements Total:	**$384.92**

Record #	CSI Number	Description	Type	Quantity	Unit Price	UOM	Factor	Line Total
17	017113000002	First 25 Miles, Equipment Delivery, Pickup, Mobilization And Demobilization Using A Rollback Flatbed Truck		2.00	$452.85	EA	0.8500	$769.85

Accepted ***History: 1.1 Added,1.2 Accepted,1.3 Accepted,2.0 Accepted***

Includes Labor Yes **Includes Equipment Yes** **Includes Materials No**

User Note: Scissor Lift and Fork delivered for crane & Monorail remplacements

Item Note: Includes loading, tie-down of equipment, delivery of equipment, off loading on site, rigging, dismantling, loading for return and transporting away. For equipment such as trenchers, skid-steer loaders (bobcats), industrial warehouse forklifts, sweepers, scissor platform lifts, telescoping and articulating boom man lifts with up to 40' boom lengths, etc.

Total:	**$769.85**
Division 01 General Requirements Total:	**$769.85**

DRAFT

** Includes Price Changes due to Construction Task Catalog update*

Price Proposal Detail Report

By Division
Version: 2.0
Approved
Proposal Value: $338,841.87
Approved Date: June 9, 2026

Catalog: August 2025 - SDMTS, General Building and Facilities Construction Services

Job Order: MTSJOC441-06

Job Order Name: Building C Crane Replacement

Location: Building C 1535 Newton Ave San Diego, CA 92113

Contractor: ABC General Inc.
Contract Number: PWG441.0-25
Contract Name: JOC General Building and Facilities Construction Services

Record #	CSI Number	Description	Type	Quantity	Unit Price	UOM	Factor	Line Total
18	017113000004	First 25 Miles, Equipment Delivery, Pickup, Mobilization And Demobilization Using A Tractor Trailer With Up To 53' Bed		1.00	$1,473.23	EA	0.8500	$1,252.25
Accepted		***History: 1.2 Added,1.3 Accepted,2.0 Accepted***						

Includes Labor Yes **Includes Equipment Yes** **Includes Materials No**

Owner Comments: *V:1.2-applicable for scissor lift and forklift delivery.*

Item Note: Includes loading, tie-down of equipment, delivery of equipment, off loading on site, rigging, dismantling, loading for return and transporting away. For equipment such as bulldozers, motor scrapers, hydraulic excavators, gradalls, road graders, loader-backhoes, heavy-duty construction loaders, tractors, pavers, rollers, bridge finishers, straight mast construction forklifts, telescoping boom rough terrain construction forklifts, telescoping and articulating boom man lifts with >40' boom lengths, etc.

Total:	**$1,252.25**
Division 01 General Requirements Total:	**$1,252.25**

Record #	CSI Number	Description	Type	Quantity	Unit Price	UOM	Factor	Line Total
19	017419000029	General Refuse		34.00	$181.21	TON	0.8500	$5,236.97
Accepted		***History: 1.1 Added,1.2 Accepted,1.3 Accepted,2.0 Accepted***						

Includes Labor No **Includes Equipment No** **Includes Materials Yes**

User Note: Disposal Costs, Steel & Motors

Total:	**$5,236.97**
Division 01 General Requirements Total:	**$5,236.97**

05 Metals **$148,083.60**

Record #	CSI Number	Description	Type	Quantity	Unit Price	UOM	Factor	Line Total
20	051223000229	W36 x 300 A992/A36 Structural Beam Or Girder		200.00	$547.33	LF	0.8500	$93,046.10
Accepted		***History: 1.2 Added,1.3 Accepted,2.0 Accepted***	**Demo:**	200.00	$87.29	LF	0.8500	$14,839.30

Includes Labor Yes **Includes Equipment Yes** **Includes Materials Yes**

Total:	**$107,885.40**
Division 05 Metals Total:	**$107,885.40**

DRAFT

** Includes Price Changes due to Construction Task Catalog update*

Price Proposal Detail Report

By Division
Version: 2.0
Approved
Proposal Value: $338,841.87
Approved Date: June 9, 2026

Catalog: August 2025 - SDMTS, General Building and Facilities Construction Services

Job Order: MTSJOC441-06

Job Order Name: Building C Crane Replacement

Location: Building C 1535 Newton Ave San Diego, CA 92113

Contractor: ABC General Inc.
Contract Number: PWG441.0-25
Contract Name: JOC General Building and Facilities Construction Services

Record #	CSI Number	Description		Type	Quantity	Unit Price	UOM	Factor	Line Total
21	051223000229	For Hot Dip Galvanizing, Add	MOD: 0003		200.00	$126.05	LF	0.8500	$21,428.50
Accepted		*History: 1.2 Added,1.3 Accepted,2.0 Accepted*							
				Includes Labor No	Includes Equipment No	Includes Materials Yes			

Total:	$21,428.50
Division 05 Metals Total:	$21,428.50

Record #	CSI Number	Description		Type	Quantity	Unit Price	UOM	Factor	Line Total
22	051223000229	For High Strength Low Alloy A588 Steel, Add	MOD: 0015		200.00	$109.47	LF	0.8500	$18,609.90
Accepted		*History: 1.2 Added,1.3 Accepted,2.0 Accepted*							
				Includes Labor Yes	Includes Equipment Yes	Includes Materials Yes			

Total:	$18,609.90
Division 05 Metals Total:	$18,609.90

Record #	CSI Number	Description	Type	Quantity	Unit Price	UOM	Factor	Line Total
23	051516000090	3/8" Diameter, 7x19, Galvanized Finish, Aircraft Cable		100.00	$1.77	LF	0.8500	$150.45
Accepted		*History: 1.2 Added,1.3 Accepted,2.0 Accepted*	Demo:	100.00	$0.11	LF	0.8500	$9.35
			Includes Labor Yes	Includes Equipment Yes	Includes Materials Yes			

Total:	$159.80
Division 05 Metals Total:	$159.80

14 Conveying Equipment **$11,989.25**

DRAFT

** Includes Price Changes due to Construction Task Catalog update*

Price Proposal Detail Report

By Division
Version: 2.0
Approved
Proposal Value: $338,841.87
Approved Date: June 9, 2026

Catalog: August 2025 - SDMTS, General Building and Facilities Construction Services

Job Order: MTSJOC441-06

Job Order Name: Building C Crane Replacement

Location: Building C 1535 Newton Ave San Diego, CA 92113

Contractor: ABC General Inc.
Contract Number: PWG441.0-25
Contract Name: JOC General Building and Facilities Construction Services

Record #	CSI Number	Description	Type	Quantity	Unit Price	UOM	Factor	Line Total
24	140120710083	Removal And Replacement Of Hoisting Cable, 5/8" - Liftpac, Bethlehem Wire Rope Minimum Breaking Strength (Tons): Traction Steel - 12.7, EHS Traction Steel - 15.4		100.00	$141.05	LF	0.8500	$11,989.25
Accepted		***History: 1.2 Added,1.3 Accepted,2.0 Accepted***						

Includes Labor Yes **Includes Equipment Yes** **Includes Materials Yes**

Item Note: Labor cost is for replacement of set of 4 ropes and rise of 40 feet.

Total:	**$11,989.25**
Division 14 Conveying Equipment Total:	**$11,989.25**

26 Electrical **$25,011.68**

Record #	CSI Number	Description	Type	Quantity	Unit Price	UOM	Factor	Line Total
25	260526000199	1/4" x 2" Copper Bar		720.00	$40.24	LF	0.8500	$24,626.88
Accepted		***History: 1.1 Added,1.2 Modified,1.3 Accepted,2.0 Accepted***						

Includes Labor Yes **Includes Equipment Yes** **Includes Materials Yes**

User Note: New grounding bars (1 per crane) 358' each

Total:	**$24,626.88**
Division 26 Electrical Total:	**$24,626.88**

Record #	CSI Number	Description	Type	Quantity	Unit Price	UOM	Factor	Line Total
26	260529000285	1" Diameter, Rigid Steel Conduit Clamp For Unistrut Channel		90.00	$5.03	EA	0.8500	$384.80
Accepted		***History: 1.1 Added,1.2 Accepted,1.3 Accepted,2.0 Accepted***						

Includes Labor Yes **Includes Equipment Yes** **Includes Materials Yes**

Total:	**$384.80**
Division 26 Electrical Total:	**$384.80**

41 Material Processing and Handling Equipment **$28,621.53**

DRAFT

** Includes Price Changes due to Construction Task Catalog update*

Price Proposal Detail Report

By Division
Version: 2.0
Approved
Proposal Value: $338,841.87
Approved Date: June 9, 2026

Catalog: August 2025 - SDMTS, General Building and Facilities Construction Services

Job Order: MTSJOC441-06

Job Order Name: Building C Crane Replacement

Location: Building C 1535 Newton Ave San Diego, CA 92113

Contractor: ABC General Inc.
Contract Number: PWG441.0-25
Contract Name: JOC General Building and Facilities Construction Services

Record #	CSI Number	Description	Type	Quantity	Unit Price	UOM	Factor	Line Total
27	412223130022	20,000 LB Capacity, Electric Industrial Chain Hoist		2.00	$16,192.05	EA	0.8500	$27,526.49
Accepted		***History: 1.2 Added,1.3 Accepted,2.0 Accepted***	**Demo:**	2.00	$644.14	EA	0.8500	$1,095.04

Includes Labor Yes **Includes Equipment Yes** **Includes Materials Yes**

Total:	**$28,621.53**
Division 41 Material Processing and Handling Equipment Total:	**$28,621.53**
Proposal Total:	**$338,841.87**
Div **The Percentage of Non Pre-Priced on this Proposal:**	**0.0%**

DRAFT

** Includes Price Changes due to Construction Task Catalog update*

EXHIBIT C
(Subcontractor Listing)

DRAFT

San Diego Metropolitan Transit System
1255 Imperial Ave
San Diego, CA 92101

Subcontractor Report

Date: 6/29/2026

Job Order Contracting

Contract #: PWG441.0-25

Job Order #: MTSJOC441-06

Job Order Title: Building C Crane Replacement

Job Order Value: $338,841.87

Location: Building C

Contractor: ABC General Inc.

Subcontractor: North American Crane Company

Subcontractor Name	License Number	Describe Nature of Work (Trade)	Certifications	Subcontractor Total	Participation %
North American Crane Company 1604 Newton Ave, San Diego, CA 92133	790487	Install New Crane System	No Certification	$95,521.50	28.19%

Summary

Certification Name	Value	% Subcontracted
No Certification	$95,521.50	28.19%
Total	**$95,521.50**	**28.19%**

DRAFT

Metropolitan Transit System

Agenda Item No. 06

MEETING OF THE SAN DIEGO METROPOLITAN TRANSIT SYSTEM
BOARD OF DIRECTORS

July 30, 2026

SUBJECT:

Grantville Transit Center Bus Bay Improvements – Work Order Agreement

RECOMMENDATION:

That the San Diego Metropolitan Transit System (MTS) Board of Directors authorizes the Chief Executive Officer (CEO) to execute Work Order No. MTSJOC457-02 under MTS Doc. PWG457.0-26 (in substantially the same format as Attachment A), with ABC General Contractor, Inc. (ABCGC), in the amount of $201,481.94 for the replacement of four (4) bus shelters that are no longer in a State of Good Repair, and the removal, alteration, and replacement of existing vehicular paving, pedestrian paving, and curb to allow for safer bus movements and passenger loading throughout the Grantville Transit Center.

Budget Impact

The total contract cost is estimated to be $201,481.94. Under separate MTS Doc No. L1282.0-16, with the Gordian Group, MTS will pay a 1.76% JOC software license fee in the amount of $3,546.08. The project will be funded by the Capital Improvement Program (CIP) 2006116301– Grantville Station Improvements.

DISCUSSION:

The Grantville Transit Center currently serves multiple bus routes from four individual bus bays. Today, there are clearance issues with buses leaving the bus bays, as well as Americans with Disabilities Act (ADA) conflicts with the existing bus shelters due to bus stop locations. The existing bus bays no longer meet MTS transit design standards, as these standards change over time with the evolution of vehicles and ADA standards. This project includes the removal and replacement of concrete pavement, the removal of existing shelters, and placement of four (4) new MTS standard solar shelters.

JOC is a procurement method under which public agencies may accomplish frequently encountered repairs, maintenance, and construction projects through a single, competitively procured long-term agreement.

The JOC program includes a catalog of pricing for a variety of potential tasks to be performed under the contract that has been pre-priced by the contractor, the Gordian Group. All potential

San Diego Metropolitan Transit System (MTS) is a California public agency comprised of San Diego Transit Corp., San Diego Trolley, Inc. and San Diego and Arizona Eastern Railway Company (nonprofit public benefit corporations). MTS member agencies include the cities of Chula Vista, Coronado, El Cajon, Imperial Beach, La Mesa, Lemon Grove, National City, Poway, San Diego, Santee, and the County of San Diego. MTS is also the For-Hire Vehicle administrator for multiple cities in San Diego County.

contractors are subject to pricing within this catalog. Each contractor then includes an adjustment factor, escalating their proposed price from the catalog price, to determine the total cost of the task order. The adjustment factor represents an average percentage increase over the catalog price (i.e., 1.25 adjustment factor represents 25% above the catalog price) for that respective task within the project. In order to select the lowest responsive and responsible bidder, MTS staff compares each contractor's proposed adjustment factor.

On March 3, 2026, MTS issued an Invitation for Bids (IFB) seeking a contractor to provide JOC building and facilities construction services that primarily consist of repair, remodeling, or other repetitive work, and general building and facility contracting services. These services include, but are not limited to, demolition, maintenance, and modification of existing buildings and facilities, as well as any required incidental professional and technical services.

Four (4) bids were received, and MTS determined that ABCGC was the lowest responsive and responsible bidder. On June 18, 2026 (Agenda Item (AI) 5), the MTS Board authorized the CEO to execute MTS Doc. No. PWG457.0-26 with ABCGC for General Building Construction Services. Today's work order will be issued under this master agreement.

Today's proposed action would issue a work order to ABCGC under their JOC General Civil Construction Services master agreement. ABCGC and its subcontractor will provide all materials, labor, and equipment for the Grantville Transit Center Bus Bay Improvements. Pricing for this repair work order was reviewed and determined to be fair and reasonable.

Work is expected to be completed within ninety (90) days of issuance of the Notice to Proceed (NTP).

ABCGC will utilize the following subcontractor for this project:

Subcontractor Name	Subcontractor Certification	Subcontractor Amount
Koch General Engineering	Small Business (SB (Micro)), Small Business-Public Works (SB-PW)	$98,483.00

This work order is not subject to the Project Labor Agreement (PLA) approved under board Policy No. 66 because it is a work order under $1,000,000.00.

Therefore, staff recommends that the MTS Board of Directors authorize the CEO to execute Work Order No. MTSJOC457-02 under MTS Doc. PWG457.0-26 (in substantially the same format as Attachment A), with ABCGC, in the amount of $201,481.94 for the replacement of four (4) bus shelters that are no longer in a State of Good Repair, and the removal, alteration, and replacement of existing vehicular paving, pedestrian paving, and curb to allow for safer bus movements and passenger loading throughout the Grantville Transit Center.

/s/ Sharon Cooney
Sharon Cooney
Chief Executive Officer

Key Staff Contact: Julia Tuer, 619.557.4515, Julia.Tuer@sdmts.com

Attachment: A. Draft Work Order MTSJOC457-02

Metropolitan Transit System

JOB ORDER CONTRACT
WORK ORDER

PWG457.0-26
CONTRACT NUMBER

MTSJOC457-02
WORK ORDER NUMBER

THIS AGREEMENT is entered into this _____ day of _____ 2026, in the state of California by and between San Diego Metropolitan Transit System ("MTS"), a California public agency, and the following, hereinafter referred to as "Contractor":

Name: ABC General Construction, Inc.

Address: 1941 Friendship Drive, Ste F
El Cajon, CA 92020

Form of Business: Corporation
(Corporation, partnership, sole proprietor, etc.)

Telephone: 619-937-1010

Authorized person to sign contracts: Travis Brozowski (Name) CEO (Title)

Pursuant to the existing Job Order Contract (MTS Doc. No. PWG457.0-26), MTS issues a Work Order to Contractor to complete the detailed Scope of Work (attached as Exhibit A.), the Cost Breakdown for the Scope of Work (attached as Exhibit B.), and the subcontractor listing form applicable to this Work Order (attached as Exhibit C.)

TOTAL PAYMENTS TO CONTRACTOR SHALL NOT EXCEED $201,481.94

SAN DIEGO METROPOLITAN TRANSIT SYSTEM	ABC GENERAL CONTRACTOR, INC.
By: _____ Sharon Cooney, Chief Executive Officer	Firm: _____
Approved as to form:	By: _____ Signature
By: _____ Karen Landers, General Counsel	Title: _____

DRAFT

EXHIBIT A
(Scope of Work)

DRAFT

San Diego Metropolitan Transit System
1255 Imperial Ave
San Diego, California 92101

Final Scope of Work

Date: 7/7/2026

Job Order Contracting

To: Noah Cappadocia
San Diego Metropolitan Transit System
1255 Imperial Ave
San Diego, CA 92101
(619) 557-4576
Noah.Cappadocia@sdmts.com

From:

Contract Number: PWG457.0-26

Job Order Number: MTSJOC457-02

Job Order Title: Grantville TC Bus Bay Improvements

Location: Grantville Station
4510 Alvarado Canyon Rd
San Diego, CA 92120

Brief Scope of Work:

SCOPE OF WORK/MINIMUM TECHNICAL SPECIFICATIONS

1 GENERAL:

Recently the Grantville Transit Center was noted as having ADA conflicts as well as conflicts with the path of travel for buses entering the station. In order for proper operation of the station, adjustments are needed for the sidewalk and curbs

All work is to occur adjacent to the bus bays at Grantville Transit Center.

2 STAGING:

Contractor is to keep and store all materials and equipment within the work area as possible. Any further staging would have to be coordinated with the MTS Project Manager. There may be some available space within or adjacent to the Grantville Transit Center. All property stored onsite is the responsibility of the contractor and MTS shall not be held liable for any and all equipment, material, tools, etc.

3 TEMP FACILITIES:

DRAFT

The contractor may use facility restrooms and wash facilities as needed. Contractor may also use facility power and water.

4 SAFETY AND ACCESS:

Diligent caution must be taken during the undertaking of this work. All work will occur within an active bus transit center. Key personnel will be granted badges for access. Only vehicles necessary for the performance of the work shall be parked within the yard adjacent to the Grantville Transit Center.

5 WASTE:

The contractor is responsible for legally disposing of any and all waste in relation to the work. The contractor shall not use any onsite receptacles to dispose of material generated during the performance of this contract. Contractor is responsible for general cleanup at the end of each work day.

DRAFT

6 SCHEDULE AND SEQUENCING:

All work shall be completed within Ninety (90) calendar days from issuance of Notice to Proceed. It is assumed there will be some lead time for some items, which is included in the duration. The work shall commence once all material is available, and the work can proceed without stoppages.

7 DETAILED SCOPE OF WORK:

Contractor is to remove all bus shelters, signage, and lights, that are in conflict with demolition and replacement footprints that are attached.

The following items detail the scope of work as discussed at the site. All requirements necessary to accomplish the items set forth below shall be considered part of this scope of work.

All job orders include the labor, equipment, and material costs for a complete and in-place installation, unless otherwise noted.

EXHIBIT B
(Cost Breakdown)

DRAFT

Price Proposal Detail Report

By Division
Version: 2.0
Approved
Proposal Value: $201,481.94
Approved Date: July 7, 2026

Catalog: February 2026 - SDMTS - General Civil

Job Order: MTSJOC457-02

Job Order Name: Grantville TC Bus Bay Improvements

Location: Grantville Station 4510 Alvarado Canyon Rd San Diego, CA 92120

Contractor: ABC General Inc.
Contract Number: PWG457.0-26
Contract Name: JOC General Civil Construction Services (ABC Construction)

Division		Install Total	NPP Total	Demo Total	Division Total
01	General Requirements	$134,198.34	$0.00	$0.00	$134,198.34
02	Existing Conditions	$11,914.47	$0.00	$0.00	$11,914.47
03	Concrete	$8,212.59	$0.00	$0.00	$8,212.59
05	Metals	$1,147.33	$0.00	$0.00	$1,147.33
26	Electrical	$356.93	$0.00	$0.00	$356.93
31	Earthwork	$13,849.05	$0.00	$167.96	$14,017.01
32	Exterior Improvements	$23,290.27	$0.00	$831.25	$24,121.52
34	Transportation	$7,513.75	$0.00	$0.00	$7,513.75
	Total:	**$200,482.73**	**$0.00**	**$999.21**	**$201,481.94**

Line Count: 74 **Proposal Total: $201,481.94**

Total Reflects Filtered Statuses: Added, Clarification Requested, Clarified, Confirmed Removal, Modified, No Change, OverRuled, Rejected, Removed, Retained, System Removal Acknowledged by Contractor, System Removal Acknowledged by Owner, System Removed

The Percentage of Non Pre-Priced on this Proposal: 0.0%

DRAFT

** Includes Price Changes due to Construction Task Catalog update*

Price Proposal Detail Report

By Division
Version: 2.0
Approved
Proposal Value: $201,481.94
Approved Date: July 7, 2026

Catalog: February 2026 - SDMTS - General Civil

Job Order: MTSJOC457-02

Job Order Name: Grantville TC Bus Bay Improvements

Location: Grantville Station 4510 Alvarado Canyon Rd San Diego, CA 92120

Contractor: ABC General Inc.
Contract Number: PWG457.0-26
Contract Name: JOC General Civil Construction Services (ABC Construction)

---

01 General Requirements — $134,198.34

Record #	CSI Number	Description	Type	Quantity	Unit Price	UOM	Factor	Line Total
1	012216000004	Reimbursable Fees		1,650.00	$1.00	EA	1.0000	$1,650.00

Accepted

History: 1.1 Added,1.2 Clarification Requested,1.3 Clarified,2.0 Accepted

Includes Labor No Includes Equipment No Includes Materials Yes

Owner Comments: *V:1.2-.*

Contractor Comments: *V:1.3-no change to this item*

User Note: For concrete PW plant and truck fee
pw plant fee 550
pw truck fee 220 per each truck x 5 trucks

Item Note: Reimbursable Fees will be paid to the contractor for eligible costs as directed by Owner. Insert the appropriate quantity to adjust the base cost to the actual Reimbursable Fee. If there are multiple Reimbursable Fees, list each one separately and add a comment in the "note" block to identify the Reimbursable Fee (e.g. sidewalk closure, road cut, various permits, extended warranty, expedited shipping costs, etc.). A copy of each receipt, invoice, or proof of payment shall be submitted with the Price Proposal.

Total: $1,650.00

Division 01 General Requirements Total: $1,650.00

Record #	CSI Number	Description	Type	Quantity	Unit Price	UOM	Factor	Line Total
2	012220000010	Electrician		40.00	$102.64	HR	1.0400	$4,269.82

Accepted

History: 1.1 Added,1.2 Clarification Requested,1.3 Modified,2.0 Accepted

Includes Labor Yes Includes Equipment No Includes Materials No

Owner Comments: *V:1.2-.*

User Note: to safe off existing lights, slavage and hook up relocated light post (2 men 3 days)

Item Note: For tasks not included in the Construction Task Catalog® and as directed by owner only.

Total: $4,269.82

Division 01 General Requirements Total: $4,269.82

Record #	CSI Number	Description	Type	Quantity	Unit Price	UOM	Factor	Line Total
3	012220000027	Laborer		16.00	$101.64	HR	1.0400	$1,691.29

Accepted

History: 1.1 Added,1.2 Clarification Requested,1.3 Clarified,2.0 Accepted

Includes Labor Yes Includes Equipment No Includes Materials No

Owner Comments: *V:1.2-.*

Contractor Comments: *V:1.3-no change to this item*

User Note: 1 day, 2 men to remove and relocate trash can

Item Note: For tasks not included in the Construction Task Catalog® and as directed by owner only.

Total: $1,691.29

Division 01 General Requirements Total: $1,691.29

DRAFT

** Includes Price Changes due to Construction Task Catalog update*

Price Proposal Detail Report

By Division
Version: 2.0
Approved
Proposal Value: $201,481.94
Approved Date: July 7, 2026

Catalog: February 2026 - SDMTS - General Civil

Job Order: MTSJOC457-02

Job Order Name: Grantville TC Bus Bay Improvements

Location: Grantville Station 4510 Alvarado Canyon Rd San Diego, CA 92120

Contractor: ABC General Inc.
Contract Number: PWG457.0-26
Contract Name: JOC General Civil Construction Services (ABC Construction)

Record #	CSI Number	Description	Type	Quantity	Unit Price	UOM	Factor	Line Total
4	012220000027	Laborer		40.00	$101.64	HR	1.0400	$4,228.22

Accepted

History: 1.1 Added,1.2 Clarification Requested,1.3 Modified,2.0 Accepted

Includes Labor Yes **Includes Equipment No** **Includes Materials No**

Owner Comments: *V:1.2-.*

User Note: to install anchors for new shelter and benches
2 guy x 2 days northside
2 guys x 2 day southside

Item Note: For tasks not included in the Construction Task Catalog® and as directed by owner only.

Total:	**$4,228.22**
Division 01 General Requirements Total:	**$4,228.22**

Record #	CSI Number	Description	Type	Quantity	Unit Price	UOM	Factor	Line Total
5	012220000027	Laborer		8.00	$101.64	HR	1.0400	$845.64

Accepted

History: 1.1 Added,1.2 Clarification Requested,1.3 Modified,2.0 Accepted

Includes Labor Yes **Includes Equipment No** **Includes Materials No**

Owner Comments: *V:1.2-.*

User Note: assembly of Bus shelters after pickup
2 men x 2 days x 4 shelters

Item Note: For tasks not included in the Construction Task Catalog® and as directed by owner only.

Total:	**$845.64**
Division 01 General Requirements Total:	**$845.64**

Record #	CSI Number	Description	Type	Quantity	Unit Price	UOM	Factor	Line Total
6	012220000027	Laborer		20.00	$101.64	HR	1.0400	$2,114.11

Accepted

History: 1.1 Added,1.2 Clarification Requested,1.3 Clarified,2.0 Accepted

Includes Labor Yes **Includes Equipment No** **Includes Materials No**

Owner Comments: *V:1.2-.*

Contractor Comments: *V:1.3-no change to this item*

User Note: relocate the safety off light, 2 men 4hrs on removal, 2 men 8hrs on installation before electrician

Item Note: For tasks not included in the Construction Task Catalog® and as directed by owner only.

Total:	**$2,114.11**
Division 01 General Requirements Total:	**$2,114.11**

DRAFT

** Includes Price Changes due to Construction Task Catalog update*

Price Proposal Detail Report

By Division
Version: 2.0
Approved
Proposal Value: $201,481.94
Approved Date: July 7, 2026

Catalog: February 2026 - SDMTS - General Civil

Job Order: MTSJOC457-02

Job Order Name: Grantville TC Bus Bay Improvements

Location: Grantville Station 4510 Alvarado Canyon Rd San Diego, CA 92120

Contractor: ABC General Inc.
Contract Number: PWG457.0-26
Contract Name: JOC General Civil Construction Services (ABC Construction)

Record #	CSI Number	Description	Type	Quantity	Unit Price	UOM	Factor	Line Total
7	012220000078	Project Manager		16.00	$160.00	HR	1.0400	$2,662.40

Accepted ***History: 1.1 Added,1.2 Clarification Requested,1.3 Modified,2.0 Accepted***

Includes Labor Yes **Includes Equipment No** **Includes Materials No**

Owner Comments: *V:1.2-.*

User Note: Review, Design and Layout out Modifications, 2 men 4hr plus 3 men 4hrs per phase (8+12+12)

Item Note: For tasks not included in the Construction Task Catalog® and as directed by owner only.

Total: $2,662.40

Division 01 General Requirements Total: $2,662.40

Record #	CSI Number	Description	Type	Quantity	Unit Price	UOM	Factor	Line Total
8	012223000288	3,200 To 3,500 Lb. Capacity, 78" Wide, Tracked Skid-Steer Loader With Full-Time Operator		5.00	$1,763.05	DAY	1.0400	$9,167.86

Accepted ***History: 1.1 Added,1.2 Clarification Requested,1.3 Clarified,2.0 Accepted***

Includes Labor Yes **Includes Equipment No** **Includes Materials Yes**

Owner Comments: *V:1.2-.*

Contractor Comments: *V:1.3-no change to this item*

User Note: 1 day to remove concrete curb and flatwork
1 day to remove footing
2 days to remove bollards
1 to remove dirt

Total: $9,167.86

Division 01 General Requirements Total: $9,167.86

Record #	CSI Number	Description	Type	Quantity	Unit Price	UOM	Factor	Line Total
9	012223000290	3,200 To 3,500 Lb. Capacity, 78" Wide, Tracked Skid-Steer Loader With Full-Time Operator		1.00	$28,374.41	MO	1.0400	$29,509.39

Accepted ***History: 1.1 Added,1.2 Clarification Requested,1.3 Clarified,2.0 Accepted***

Includes Labor Yes **Includes Equipment No** **Includes Materials Yes**

Owner Comments: *V:1.2-.*

Contractor Comments: *V:1.3-no change to this item*

Total: $29,509.39

Division 01 General Requirements Total: $29,509.39

DRAFT

** Includes Price Changes due to Construction Task Catalog update*

Price Proposal Detail Report

By Division
Version: 2.0
Approved
Proposal Value: $201,481.94
Approved Date: July 7, 2026

Catalog: February 2026 - SDMTS - General Civil

Job Order: MTSJOC457-02

Job Order Name: Grantville TC Bus Bay Improvements

Location: Grantville Station 4510 Alvarado Canyon Rd San Diego, CA 92120

Contractor: ABC General Inc.
Contract Number: PWG457.0-26
Contract Name: JOC General Civil Construction Services (ABC Construction)

Record #	CSI Number	Description	Type	Quantity	Unit Price	UOM	Factor	Line Total
10	012223000290	For Equipment Without Operator, Deduct **MOD: 0042**		0.50	-$22,634.37	MO	1.0400	-$11,769.87

Accepted

History: 1.1 Added,1.2 Clarification Requested,1.3 Clarified,2.0 Accepted

Includes Labor Yes **Includes Equipment No** **Includes Materials No**

Total:	**-$11,769.87**
Division 01 General Requirements Total:	**-$11,769.87**

Record #	CSI Number	Description	Type	Quantity	Unit Price	UOM	Factor	Line Total
11	012223000291	Hydraulic Hammer Attachment For Skid-Steer Loaders		4.00	$281.72	DAY	1.0400	$1,171.96

Accepted

History: 1.1 Added,1.2 Clarification Requested,1.3 Clarified,2.0 Accepted

Includes Labor No **Includes Equipment No** **Includes Materials Yes**

Owner Comments: *V:1.2-.*

Contractor Comments: *V:1.3-no change to this item*

Total:	**$1,171.96**
Division 01 General Requirements Total:	**$1,171.96**

Record #	CSI Number	Description	Type	Quantity	Unit Price	UOM	Factor	Line Total
12	012223000302	Broom Attachment For Skid-Steer Loaders		1.00	$950.80	MO	1.0400	$988.83

Accepted

History: 1.1 Added,1.2 Clarification Requested,1.3 Clarified,2.0 Accepted

Includes Labor No **Includes Equipment No** **Includes Materials Yes**

Owner Comments: *V:1.2-.*

Contractor Comments: *V:1.3-no change to this item*

Total:	**$988.83**
Division 01 General Requirements Total:	**$988.83**

DRAFT

** Includes Price Changes due to Construction Task Catalog update*

Price Proposal Detail Report

By Division
Version: 2.0
Approved
Proposal Value: $201,481.94
Approved Date: July 7, 2026

Catalog: February 2026 - SDMTS - General Civil

Job Order: MTSJOC457-02

Job Order Name: Grantville TC Bus Bay Improvements

Location: Grantville Station 4510 Alvarado Canyon Rd San Diego, CA 92120

Contractor: ABC General Inc.
Contract Number: PWG457.0-26
Contract Name: JOC General Civil Construction Services (ABC Construction)

Record #	CSI Number	Description	Type	Quantity	Unit Price	UOM	Factor	Line Total
13	012223000418	3,500 Lb. Capacity, Mini-Excavator With Full-Time Operator		1.00	$1,338.33	DAY	1.0400	$1,391.86

Accepted

History: 1.1 Added,1.2 Clarification Requested,1.3 Modified,2.0 Accepted

Includes Labor Yes **Includes Equipment No** **Includes Materials Yes**

Owner Comments: *V:1.2-.*

User Note:
1 day to remove concrete curb and flatwork
2 day to remove footings
2 days to remove bollards
1 to remove dirt

Total: $1,391.86

Division 01 General Requirements Total: $1,391.86

Record #	CSI Number	Description	Type	Quantity	Unit Price	UOM	Factor	Line Total
14	012223001079	6,000 Lb. Capacity, Telescopic Boom, Hi-Reach, Rough Terrain Construction Forklift With Full-Time Operator		1.00	$1,699.06	DAY	1.0400	$1,767.02

Accepted

History: 1.1 Added,1.2 Clarification Requested,1.3 Modified,2.0 Accepted

Includes Labor Yes **Includes Equipment No** **Includes Materials Yes**

Owner Comments: *V:1.2-.*

User Note:
2 days remove northside shelter and benches
2 day remove southside shelter and benches
1 day install northside shelter and benches
1 day to install southside shelter and benches

Total: $1,767.02

Division 01 General Requirements Total: $1,767.02

Record #	CSI Number	Description	Type	Quantity	Unit Price	UOM	Factor	Line Total
15	012223001498	12 To 14 CY Rear Dump Truck With Full-Time Truck Driver		4.00	$2,204.23	DAY	1.0400	$9,169.60

Accepted

History: 1.1 Added,1.2 Clarification Requested,1.3 Clarified,2.0 Accepted

Includes Labor Yes **Includes Equipment No** **Includes Materials Yes**

Owner Comments: *V:1.2-.*

Contractor Comments: *V:1.3-no change to this item*

User Note: pick up shelters (4), mod added for 2 man in truck

Total: $9,169.60

Division 01 General Requirements Total: $9,169.60

DRAFT

** Includes Price Changes due to Construction Task Catalog update*

Price Proposal Detail Report

By Division
Version: 2.0
Approved
Proposal Value: $201,481.94
Approved Date: July 7, 2026

Catalog: February 2026 - SDMTS - General Civil

Job Order: MTSJOC457-02

Job Order Name: Grantville TC Bus Bay Improvements

Location: Grantville Station 4510 Alvarado Canyon Rd San Diego, CA 92120

Contractor: ABC General Inc.
Contract Number: PWG457.0-26
Contract Name: JOC General Civil Construction Services (ABC Construction)

Record #	CSI Number	Description	Type	Quantity	Unit Price	UOM	Factor	Line Total
16	012223001498	For Equipment Without Operator, Deduct **MOD: 0032**		-4.00	-$737.02	DAY	1.0400	$3,066.00

Accepted

History: 1.1 Added,1.2 Clarification Requested,1.3 Clarified,2.0 Accepted

Includes Labor Yes **Includes Equipment No** **Includes Materials No**

User Note: mod added for 2 man in truck

Total: $3,066.00

Division 01 General Requirements Total: $3,066.00

Record #	CSI Number	Description	Type	Quantity	Unit Price	UOM	Factor	Line Total
17	012223001498	12 To 14 CY Rear Dump Truck With Full-Time Truck Driver		1.00	$2,204.23	DAY	1.0400	$2,292.40

Accepted

History: 1.1 Added,1.2 Clarification Requested,1.3 Modified,2.0 Accepted

Includes Labor Yes **Includes Equipment No** **Includes Materials Yes**

Owner Comments: *V:1.2-.*

User Note: 1 day for concrete curb and flatwork
1 day for dirt work
2 days to haul off shelter and benches
2 days to hauls of bollards

Total: $2,292.40

Division 01 General Requirements Total: $2,292.40

Record #	CSI Number	Description	Type	Quantity	Unit Price	UOM	Factor	Line Total
18	012223001509	2,000 Gallon Water Truck With Full-Time Driver		2.00	$621.45	DAY	1.0400	$1,292.62

Accepted

History: 1.1 Added,1.2 Clarification Requested,1.3 Clarified,2.0 Accepted

Includes Labor No **Includes Equipment No** **Includes Materials Yes**

Owner Comments: *V:1.2-.*

Contractor Comments: *V:1.3-no change to this item*

User Note: 1 day for dirt work, per phase, no labor

Total: $1,292.62

Division 01 General Requirements Total: $1,292.62

DRAFT

** Includes Price Changes due to Construction Task Catalog update*

Price Proposal Detail Report

By Division
Version: 2.0
Approved
Proposal Value: $201,481.94
Approved Date: July 7, 2026

Catalog: February 2026 - SDMTS - General Civil

Job Order: MTSJOC457-02

Job Order Name: Grantville TC Bus Bay Improvements

Location: Grantville Station 4510 Alvarado Canyon Rd San Diego, CA 92120

Contractor: ABC General Inc.
Contract Number: PWG457.0-26
Contract Name: JOC General Civil Construction Services (ABC Construction)

Record #	CSI Number	Description	Type	Quantity	Unit Price	UOM	Factor	Line Total
19	015219000003	Portable Chemical Toilet		1.00	$224.07	MO	1.0400	$233.03

Accepted

History: 1.1 Added,1.2 Clarification Requested,1.3 Clarified,2.0 Accepted

Includes Labor No **Includes Equipment No** **Includes Materials Yes**

Owner Comments: *V:1.2-.*

Contractor Comments: *V:1.3-no change to this item*

Total: $233.03

Division 01 General Requirements Total: $233.03

Record #	CSI Number	Description	Type	Quantity	Unit Price	UOM	Factor	Line Total
20	015219000009	Two Station Portable Handwash		0.00	$175.53	MO	1.0400	$0.00

Accepted

History: 1.1 Added,1.2 Clarification Requested,1.3 Modified,2.0 Accepted

Includes Labor No **Includes Equipment No** **Includes Materials No**

Owner Comments: *V:1.2-.*

Total: $0.00

Division 01 General Requirements Total: $0.00

Record #	CSI Number	Description	Type	Quantity	Unit Price	UOM	Factor	Line Total
21	015526000030	28" Cone With Reflective Collar		50.00	$8.19	MO	1.0400	$425.88

Accepted

History: 1.1 Added,1.2 Clarification Requested,1.3 Clarified,2.0 Accepted

Includes Labor No **Includes Equipment No** **Includes Materials Yes**

Owner Comments: *V:1.2-.*

Contractor Comments: *V:1.3-no change to this item*

User Note: Rental
50 each x 30 days

Total: $425.88

Division 01 General Requirements Total: $425.88

DRAFT

** Includes Price Changes due to Construction Task Catalog update*

Price Proposal Detail Report

By Division
Version: 2.0
Approved
Proposal Value: $201,481.94
Approved Date: July 7, 2026

Catalog: February 2026 - SDMTS - General Civil

Job Order: MTSJOC457-02

Job Order Name: Grantville TC Bus Bay Improvements

Location: Grantville Station 4510 Alvarado Canyon Rd San Diego, CA 92120

Contractor: ABC General Inc.
Contract Number: PWG457.0-26
Contract Name: JOC General Civil Construction Services (ABC Construction)

Record #	CSI Number	Description	Type	Quantity	Unit Price	UOM	Factor	Line Total
22	015526000051	Type II Barricade, Up To 3' Wide With Two Reflective Rails Each Side		12.00	$39.00	MO	1.0400	$486.72

Accepted

History: 1.1 Added,1.2 Clarification Requested,1.3 Clarified,2.0 Accepted

Includes Labor No **Includes Equipment No** **Includes Materials Yes**

Owner Comments: *V:1.2-.*

Contractor Comments: *V:1.3-no change to this item*

User Note: Rental
12 each for 30 day

Total:	**$486.72**
Division 01 General Requirements Total:	**$486.72**

Record #	CSI Number	Description	Type	Quantity	Unit Price	UOM	Factor	Line Total
23	015526000149	Initial Delivery, Placement And Final Removal From Site Of Up To 250 Temporary Traffic Cones Using Truck		1,500.00	$4.16	EA	1.0400	$6,489.60

Accepted

History: 1.1 Added,1.2 Clarification Requested,1.3 Clarified,2.0 Accepted

Includes Labor Yes **Includes Equipment Yes** **Includes Materials No**

Owner Comments: *V:1.2-.*

Contractor Comments: *V:1.3-no change to this item*

User Note: Rental
50 each x 30 days

Item Note: Per each cone.

Total:	**$6,489.60**
Division 01 General Requirements Total:	**$6,489.60**

Record #	CSI Number	Description	Type	Quantity	Unit Price	UOM	Factor	Line Total
24	015526000153	Initial Delivery, Placement And Final Removal From Site Of Up To 250 Temporary Traffic Barricades Using Truck		360.00	$10.40	EA	1.0400	$3,893.76

Accepted

History: 1.1 Added,1.2 Clarification Requested,1.3 Clarified,2.0 Accepted

Includes Labor Yes **Includes Equipment Yes** **Includes Materials No**

Owner Comments: *V:1.2-.*

Contractor Comments: *V:1.3-no change to this item*

User Note: Rental
12 each for 30 day

Item Note: Per each barricade

Total:	**$3,893.76**
Division 01 General Requirements Total:	**$3,893.76**

DRAFT

** Includes Price Changes due to Construction Task Catalog update*

Price Proposal Detail Report

By Division
Version: 2.0
Approved
Proposal Value: $201,481.94
Approved Date: July 7, 2026

Catalog: February 2026 - SDMTS - General Civil

Job Order: MTSJOC457-02

Job Order Name: Grantville TC Bus Bay Improvements

Location: Grantville Station 4510 Alvarado Canyon Rd San Diego, CA 92120

Contractor: ABC General Inc.
Contract Number: PWG457.0-26
Contract Name: JOC General Civil Construction Services (ABC Construction)

Record #	CSI Number	Description	Type	Quantity	Unit Price	UOM	Factor	Line Total
25	015626000143	Temporary 6' High Chain Link Fence Panels (Portable), Up To 6 Months		500.00	$9.30	LF	1.0400	$4,836.00

Accepted ***History: 1.1 Added,1.2 Clarification Requested,1.3 Clarified,2.0 Accepted***

Includes Labor Yes **Includes Equipment Yes** **Includes Materials Yes**

Owner Comments: *V:1.2-.*

Contractor Comments: *V:1.3-no change to this item*

Total:	**$4,836.00**
Division 01 General Requirements Total:	**$4,836.00**

Record #	CSI Number	Description	Type	Quantity	Unit Price	UOM	Factor	Line Total
26	015626000158	Temporary Chain Link Fence Panels (Portable) Sandbag		100.00	$7.62	BAG	1.0400	$792.48

Accepted ***History: 1.1 Added,1.2 Clarification Requested,1.3 Clarified,2.0 Accepted***

Includes Labor Yes **Includes Equipment Yes** **Includes Materials Yes**

Owner Comments: *V:1.2-.*

Contractor Comments: *V:1.3-no change to this item*

Item Note: Includes placement and removal.

Total:	**$792.48**
Division 01 General Requirements Total:	**$792.48**

Record #	CSI Number	Description	Type	Quantity	Unit Price	UOM	Factor	Line Total
27	015626000167	Relocate Temporary 6' High Chain Link Fence Panel, Self Standing		500.00	$1.23	LF	1.0400	$639.60

Accepted ***History: 1.1 Added,1.2 Clarification Requested,1.3 Clarified,2.0 Accepted***

Includes Labor Yes **Includes Equipment Yes** **Includes Materials No**

Owner Comments: *V:1.2-.*

Contractor Comments: *V:1.3-no change to this item*

Total:	**$639.60**
Division 01 General Requirements Total:	**$639.60**

DRAFT

** Includes Price Changes due to Construction Task Catalog update*

Price Proposal Detail Report

By Division
Version: 2.0
Approved
Proposal Value: $201,481.94
Approved Date: July 7, 2026

Catalog: February 2026 - SDMTS - General Civil

Job Order: MTSJOC457-02

Job Order Name: Grantville TC Bus Bay Improvements

Location: Grantville Station 4510 Alvarado Canyon Rd San Diego, CA 92120

Contractor: ABC General Inc.
Contract Number: PWG457.0-26
Contract Name: JOC General Civil Construction Services (ABC Construction)

Record #	CSI Number	Description	Type	Quantity	Unit Price	UOM	Factor	Line Total
28	015626000175	48" High With Posts At 8' On Center, Plastic Mesh Temporary Safety Fence		500.00	$3.82	LF	1.0400	$1,986.40

Accepted

History: 1.1 Added,1.2 Clarification Requested,1.3 Clarified,2.0 Accepted

Includes Labor Yes **Includes Equipment Yes** **Includes Materials Yes**

Owner Comments: *V:1.2-.*

Contractor Comments: *V:1.3-no change to this item*

User Note: control pedestrians as needed outside of chainlink

Total: $1,986.40

Division 01 General Requirements Total: $1,986.40

Record #	CSI Number	Description	Type	Quantity	Unit Price	UOM	Factor	Line Total
29	017113000004	First 25 Miles, Equipment Delivery, Pickup, Mobilization And Demobilization Using A Tractor Trailer With Up To 53' Bed		7.00	$1,479.55	EA	1.0400	$10,771.12

Accepted

History: 1.1 Added,1.2 Clarification Requested,1.3 Clarified,2.0 Accepted

Includes Labor Yes **Includes Equipment Yes** **Includes Materials No**

Owner Comments: *V:1.2-.*

Contractor Comments: *V:1.3-no change to this item*

User Note: 1 time: mini ex, bobcat, roller

Shelters: Telescopic Boom
1 remove north side shelters
1 install north side shelters
1 remove southside shelters
1 install southside shelters

Item Note: Includes loading, tie-down of equipment, delivery of equipment, off loading on site, rigging, dismantling, loading for return and transporting away. For equipment such as bulldozers, motor scrapers, hydraulic excavators, gradalls, road graders, loader-backhoes, heavy-duty construction loaders, tractors, pavers, rollers, bridge finishers, straight mast construction forklifts, telescoping boom rough terrain construction forklifts, telescoping and articulating boom man lifts with >40' boom lengths, etc.

Total: $10,771.12

Division 01 General Requirements Total: $10,771.12

DRAFT

** Includes Price Changes due to Construction Task Catalog update*

Price Proposal Detail Report

By Division
Version: 2.0
Approved
Proposal Value: $201,481.94
Approved Date: July 7, 2026

Catalog: February 2026 - SDMTS - General Civil

Job Order: MTSJOC457-02

Job Order Name: Grantville TC Bus Bay Improvements

Location: Grantville Station 4510 Alvarado Canyon Rd San Diego, CA 92120

Contractor: ABC General Inc.
Contract Number: PWG457.0-26
Contract Name: JOC General Civil Construction Services (ABC Construction)

Record #	CSI Number	Description	Type	Quantity	Unit Price	UOM	Factor	Line Total
30	017123160019	Survey Clear Area For Underground Utilities		0.25	$7,083.36	ACR	1.0400	$1,841.67

Accepted

History: 1.1 Added,1.2 Clarification Requested,1.3 Clarified,2.0 Accepted

Includes Labor Yes **Includes Equipment Yes** **Includes Materials Yes**

Owner Comments: *V:1.2-.*

Contractor Comments: *V:1.3-no change to this item*

Total:	**$1,841.67**
Division 01 General Requirements Total:	**$1,841.67**

Record #	CSI Number	Description	Type	Quantity	Unit Price	UOM	Factor	Line Total
31	017419000021	Rampless Concrete Washout Bin		1.00	$527.45	MO	1.0400	$548.55

Accepted

History: 1.1 Added,1.2 Clarification Requested,1.3 Clarified,2.0 Accepted

Includes Labor No **Includes Equipment No** **Includes Materials Yes**

Owner Comments: *V:1.2-.*

Contractor Comments: *V:1.3-no change to this item*

Item Note: Includes delivery.

Total:	**$548.55**
Division 01 General Requirements Total:	**$548.55**

Record #	CSI Number	Description	Type	Quantity	Unit Price	UOM	Factor	Line Total
32	017419000029	General Refuse		160.00	$214.81	TON	1.0400	$35,744.38

Accepted

History: 1.1 Added,1.2 Clarification Requested,1.3 Clarified,2.0 Accepted

Includes Labor No **Includes Equipment No** **Includes Materials Yes**

Owner Comments: *V:1.2-.*

Contractor Comments: *V:1.3-no change to this item*

User Note: concrete, dirt, shelter, benches, and bollards (8 loads)

Total:	**$35,744.38**
Division 01 General Requirements Total:	**$35,744.38**

02 Existing Conditions	**$11,914.47**

DRAFT

** Includes Price Changes due to Construction Task Catalog update*

Price Proposal Detail Report

By Division
Version: 2.0
Approved
Proposal Value: $201,481.94
Approved Date: July 7, 2026

Catalog: February 2026 - SDMTS - General Civil

Job Order: MTSJOC457-02

Job Order Name: Grantville TC Bus Bay Improvements

Location: Grantville Station 4510 Alvarado Canyon Rd San Diego, CA 92120

Contractor: ABC General Inc.
Contract Number: PWG457.0-26
Contract Name: JOC General Civil Construction Services (ABC Construction)

Record #	CSI Number	Description	Type	Quantity	Unit Price	UOM	Factor	Line Total
33	024113130009	>3" To 6" By Machine, Break-up And Remove Non-Reinforced Concrete Paving		94.00	$25.67	SY	1.0400	$2,509.50

Accepted

History: 1.1 Added,1.2 Clarification Requested,1.3 Clarified,2.0 Accepted

Includes Labor Yes **Includes Equipment Yes** **Includes Materials No**

Owner Comments: *V:1.2-.*

Contractor Comments: *V:1.3-no change to this item*

User Note: sidewalk and trenchs

Total: $2,509.50

Division 02 Existing Conditions Total: $2,509.50

Record #	CSI Number	Description	Type	Quantity	Unit Price	UOM	Factor	Line Total
34	024113130024	>3" To 6" By Hand, Break-up And Remove Concrete Paving		362.00	$7.88	SF	1.0400	$2,966.66

Accepted

History: 1.1 Added,1.2 Clarification Requested,1.3 Clarified,2.0 Accepted

Includes Labor Yes **Includes Equipment Yes** **Includes Materials No**

Owner Comments: *V:1.2-.*

Contractor Comments: *V:1.3-no change to this item*

User Note: for 4' sidewalk over footings

Total: $2,966.66

Division 02 Existing Conditions Total: $2,966.66

Record #	CSI Number	Description	Type	Quantity	Unit Price	UOM	Factor	Line Total
35	024119130062	Non-Reinforced Concrete Slab Or Paving Up To 4" Depth, Saw Cut		1,000.00	$3.15	LF	1.0400	$3,276.00

Accepted

History: 1.1 Added,1.2 Clarification Requested,1.3 Clarified,2.0 Accepted

Includes Labor Yes **Includes Equipment Yes** **Includes Materials Yes**

Owner Comments: *V:1.2-.*

Contractor Comments: *V:1.3-no change to this item*

Total: $3,276.00

Division 02 Existing Conditions Total: $3,276.00

DRAFT

** Includes Price Changes due to Construction Task Catalog update*

Price Proposal Detail Report

By Division
Version: 2.0
Approved
Proposal Value: $201,481.94
Approved Date: July 7, 2026

Catalog: February 2026 - SDMTS - General Civil

Job Order: MTSJOC457-02

Job Order Name: Grantville TC Bus Bay Improvements

Location: Grantville Station 4510 Alvarado Canyon Rd San Diego, CA 92120

Contractor: ABC General Inc.
Contract Number: PWG457.0-26
Contract Name: JOC General Civil Construction Services (ABC Construction)

Record #	CSI Number	Description	Type	Quantity	Unit Price	UOM	Factor	Line Total
36	024119130062	For Each Additional Pass (Depth To 3"), Add **MOD: 0031**		1,000.00	$1.20	LF	1.0400	$1,248.00

Accepted

History: 1.1 Added,1.2 Clarification Requested,1.3 Clarified,2.0 Accepted

Includes Labor Yes **Includes Equipment Yes** **Includes Materials Yes**

Total: $1,248.00

Division 02 Existing Conditions Total: $1,248.00

Record #	CSI Number	Description	Type	Quantity	Unit Price	UOM	Factor	Line Total
37	024119130283	3/4" Diameter Drilling In Concrete Per Inch Of Depth		516.00	$3.45	IN	1.0400	$1,851.41

Accepted

History: 1.1 Added,1.2 Clarification Requested,1.3 Clarified,2.0 Accepted

Includes Labor Yes **Includes Equipment Yes** **Includes Materials Yes**

Owner Comments: *V:1.2-.*

Contractor Comments: *V:1.3-no change to this item*

User Note: 43 each x 12" = 516

Total: $1,851.41

Division 02 Existing Conditions Total: $1,851.41

Record #	CSI Number	Description	Type	Quantity	Unit Price	UOM	Factor	Line Total
38	024119130283	3/4" Diameter Drilling In Concrete Per Inch Of Depth		672.00	$0.09	IN	1.0400	$62.90

Accepted

History: 1.1 Added,1.2 Clarification Requested,1.3 Clarified,2.0 Accepted

Includes Labor No **Includes Equipment Yes** **Includes Materials Yes**

Owner Comments: *V:1.2-.*

Contractor Comments: *V:1.3-no change to this item*

User Note: to drill for anchors for new shelter and benches
4 shelter x 5 legs x 4 anchors
4 benches x 4 legs x 2 anchors
total 112 x 6" (labor removed - in Laborer Line item)

Total: $62.90

Division 02 Existing Conditions Total: $62.90

03 Concrete **$8,212.59**

DRAFT

** Includes Price Changes due to Construction Task Catalog update*

Price Proposal Detail Report

By Division
Version: 2.0
Approved
Proposal Value: $201,481.94
Approved Date: July 7, 2026

Catalog: February 2026 - SDMTS - General Civil

Job Order: MTSJOC457-02

Job Order Name: Grantville TC Bus Bay Improvements

Location: Grantville Station 4510 Alvarado Canyon Rd San Diego, CA 92120

Contractor: ABC General Inc.
Contract Number: PWG457.0-26
Contract Name: JOC General Civil Construction Services (ABC Construction)

Record #	CSI Number	Description	Type	Quantity	Unit Price	UOM	Factor	Line Total
39	032111000243	5/8" Diameter x 24" Long, Deformed Straight Dowel		43.00	$4.80	EA	1.0400	$214.66

Accepted

History: 1.1 Added,1.2 Clarification Requested,1.3 Clarified,2.0 Accepted

Includes Labor Yes **Includes Equipment Yes** **Includes Materials Yes**

Owner Comments: *V:1.2-.*

Contractor Comments: *V:1.3-no change to this item*

Total:	**$214.66**
Division 03 Concrete Total:	**$214.66**

Record #	CSI Number	Description	Type	Quantity	Unit Price	UOM	Factor	Line Total
40	033113000092	Delivery Fee For Small Concrete Purchases (Short Load) Per CY For Each CY Less Than 9 CY		40.00	$27.69	CY	1.0400	$1,151.90

Accepted

History: 1.1 Added,1.2 Clarification Requested,1.3 Clarified,2.0 Accepted

Includes Labor No **Includes Equipment No** **Includes Materials Yes**

Owner Comments: *V:1.2-.*

Contractor Comments: *V:1.3-no change to this item*

User Note: 5 short loads

Item Note: The task quantity is 9 minus the number of CY's delivered. For example, the delivery fee for 2CY's is: (9-2) = 7.

Total:	**$1,151.90**
Division 03 Concrete Total:	**$1,151.90**

Record #	CSI Number	Description	Type	Quantity	Unit Price	UOM	Factor	Line Total
41	033513000004	Broom, Concrete Floor Finish		328.00	$1.54	SF	1.0400	$525.32

Accepted

History: 1.1 Added,1.2 Clarification Requested,1.3 Clarified,2.0 Accepted

Includes Labor Yes **Includes Equipment Yes** **Includes Materials No**

Owner Comments: *V:1.2-.*

Contractor Comments: *V:1.3-no change to this item*

Total:	**$525.32**
Division 03 Concrete Total:	**$525.32**

DRAFT

** Includes Price Changes due to Construction Task Catalog update*

Price Proposal Detail Report

By Division
Version: 2.0
Approved
Proposal Value: $201,481.94
Approved Date: July 7, 2026

Catalog: February 2026 - SDMTS - General Civil

Job Order: MTSJOC457-02

Job Order Name: Grantville TC Bus Bay Improvements

Location: Grantville Station 4510 Alvarado Canyon Rd San Diego, CA 92120

Contractor: ABC General Inc.
Contract Number: PWG457.0-26
Contract Name: JOC General Civil Construction Services (ABC Construction)

Record #	CSI Number	Description	Type	Quantity	Unit Price	UOM	Factor	Line Total
42	033513000004	For >250 To 500, Add MOD: 0054		328.00	$0.38	SF	1.0400	$129.63

Accepted

History: 1.1 Added,1.2 Clarification Requested,1.3 Clarified,2.0 Accepted

Includes Labor Yes **Includes Equipment No** **Includes Materials No**

Total:	**$129.63**
Division 03 Concrete Total:	**$129.63**

Record #	CSI Number	Description	Type	Quantity	Unit Price	UOM	Factor	Line Total
43	033913000002	Water Based Curing, Sealing, Hardening And Dustproofing Compound		328.00	$0.39	SF	1.0400	$133.04

Accepted

History: 1.1 Added,1.2 Clarification Requested,1.3 Clarified,2.0 Accepted

Includes Labor Yes **Includes Equipment No** **Includes Materials Yes**

Owner Comments: *V:1.2-.*

Contractor Comments: *V:1.3-no change to this item*

Item Note: Coverage rates: rough finish = 300 SF/GAL, broom finish = 300 to 400 SF/GAL, steel troweled = 500 to 600 SF/GAL, and vertical surface = 400 - 500 SF/GAL.

Total:	**$133.04**
Division 03 Concrete Total:	**$133.04**

Record #	CSI Number	Description	Type	Quantity	Unit Price	UOM	Factor	Line Total
44	036423000002	Pressure Injected Epoxy Grout		2.00	$1,414.68	CF	1.0400	$2,942.53

Accepted

History: 1.1 Added,1.2 Clarification Requested,1.3 Clarified,2.0 Accepted

Includes Labor Yes **Includes Equipment Yes** **Includes Materials Yes**

Owner Comments: *V:1.2-.*

Contractor Comments: *V:1.3-no change to this item*

User Note: 43 anchors epoxied in (.05CF each)

Total:	**$2,942.53**
Division 03 Concrete Total:	**$2,942.53**

DRAFT

** Includes Price Changes due to Construction Task Catalog update*

Price Proposal Detail Report

By Division
Version: 2.0
Approved
Proposal Value: $201,481.94
Approved Date: July 7, 2026

Catalog: February 2026 - SDMTS - General Civil

Job Order: MTSJOC457-02

Job Order Name: Grantville TC Bus Bay Improvements

Location: Grantville Station 4510 Alvarado Canyon Rd San Diego, CA 92120

Contractor: ABC General Inc.
Contract Number: PWG457.0-26
Contract Name: JOC General Civil Construction Services (ABC Construction)

Record #	CSI Number	Description	Type	Quantity	Unit Price	UOM	Factor	Line Total
45	036426000002	Pressure Injected Cementitious Grout		12.00	$249.64	CF	1.0400	$3,115.51

Accepted

History: 1.1 Added,1.2 Clarification Requested,1.3 Clarified,2.0 Accepted

Includes Labor Yes **Includes Equipment Yes** **Includes Materials Yes**

Owner Comments: *V:1.2-.*

Contractor Comments: *V:1.3-no change to this item*

User Note: for under base plates

Total: $3,115.51

Division 03 Concrete Total: $3,115.51

05 Metals **$1,147.33**

Record #	CSI Number	Description	Type	Quantity	Unit Price	UOM	Factor	Line Total
46	050519000089	5/8" Diameter x 6" Length, Hot Dipped Galvanized Steel, Wedge Anchor Expansion Bolt		112.00	$9.85	EA	1.0400	$1,147.33

Accepted

History: 1.1 Added,1.2 Clarification Requested,1.3 Clarified,2.0 Accepted

Includes Labor No **Includes Equipment Yes** **Includes Materials Yes**

Owner Comments: *V:1.2-.*

Contractor Comments: *V:1.3-no change to this item*

User Note: anchors for new shelter and benches
4 shelter x 5 legs x 4 anchors
4 benches x 4 legs x 2 anchors
total 112 (labor removed - in Laborer Line item)

Total: $1,147.33

Division 05 Metals Total: $1,147.33

26 Electrical **$356.93**

Record #	CSI Number	Description	Type	Quantity	Unit Price	UOM	Factor	Line Total
47	260533131868	1" Schedule 40 Polyvinyl Chloride (PVC) Conduit With Coupled End, Direct Burial		60.00	$5.72	LF	1.0400	$356.93

Accepted

History: 1.1 Added,1.2 Clarification Requested,1.3 Clarified,2.0 Accepted

Includes Labor Yes **Includes Equipment Yes** **Includes Materials Yes**

Owner Comments: *V:1.2-.*

Contractor Comments: *V:1.3-no change to this item*

User Note: For new electrical runs

Total: $356.93

Division 26 Electrical Total: $356.93

31 Earthwork **$14,017.01**

DRAFT

** Includes Price Changes due to Construction Task Catalog update*

Price Proposal Detail Report

By Division
Version: 2.0
Approved
Proposal Value: $201,481.94
Approved Date: July 7, 2026

Catalog: February 2026 - SDMTS - General Civil

Job Order: MTSJOC457-02

Job Order Name: Grantville TC Bus Bay Improvements

Location: Grantville Station 4510 Alvarado Canyon Rd San Diego, CA 92120

Contractor: ABC General Inc.
Contract Number: PWG457.0-26
Contract Name: JOC General Civil Construction Services (ABC Construction)

Record #	CSI Number	Description	Type	Quantity	Unit Price	UOM	Factor	Line Total
48	310516000026	Graded Aggregate Base Fill (3/4" Minus) Class II Base		6.00	$51.02	CY	1.0400	$318.36

Accepted

History: 1.1 Added,1.2 Clarification Requested,1.3 Clarified,2.0 Accepted

Includes Labor Yes **Includes Equipment Yes** **Includes Materials Yes**

Owner Comments: *V:1.2-.*

Contractor Comments: *V:1.3-no change to this item*

Total:	**$318.36**
Division 31 Earthwork Total:	**$318.36**

Record #	CSI Number	Description	Type	Quantity	Unit Price	UOM	Factor	Line Total
49	310516000026	For Up To 8, Add **MOD: 0053**		6.00	$10.20	CY	1.0400	$63.65

Accepted

History: 1.1 Added,1.2 Clarification Requested,1.3 Clarified,2.0 Accepted

Includes Labor Yes **Includes Equipment Yes** **Includes Materials Yes**

Total:	**$63.65**
Division 31 Earthwork Total:	**$63.65**

Record #	CSI Number	Description	Type	Quantity	Unit Price	UOM	Factor	Line Total
50	312316130003	Over 12" Wide, Excavation for Trenching by Machine in Soil		29.00	$7.98	CY	1.0400	$240.68

Accepted

History: 1.1 Added,1.2 Clarification Requested,1.3 Clarified,2.0 Accepted

Includes Labor Yes **Includes Equipment Yes** **Includes Materials No**

Owner Comments: *V:1.2-.*

Contractor Comments: *V:1.3-no change to this item*

Total:	**$240.68**
Division 31 Earthwork Total:	**$240.68**

DRAFT

** Includes Price Changes due to Construction Task Catalog update*

Price Proposal Detail Report

By Division
Version: 2.0
Approved
Proposal Value: $201,481.94
Approved Date: July 7, 2026

Catalog: February 2026 - SDMTS - General Civil

Job Order: MTSJOC457-02

Job Order Name: Grantville TC Bus Bay Improvements

Location: Grantville Station 4510 Alvarado Canyon Rd San Diego, CA 92120

Contractor: ABC General Inc.
Contract Number: PWG457.0-26
Contract Name: JOC General Civil Construction Services (ABC Construction)

Record #	CSI Number	Description	Type	Quantity	Unit Price	UOM	Factor	Line Total
51	312316130003	For Up To 20, Add MOD: 0062		29.00	$7.98	CY	1.0400	$240.68

Accepted

History: 1.1 Added,1.2 Clarification Requested,1.3 Clarified,2.0 Accepted

Includes Labor Yes **Includes Equipment Yes** **Includes Materials No**

Total: $240.68

Division 31 Earthwork Total: $240.68

Record #	CSI Number	Description	Type	Quantity	Unit Price	UOM	Factor	Line Total
52	312316130007	Excavation For Trenching By Hand In Soil		29.00	$153.60	CY	1.0400	$4,632.58

Accepted

History: 1.1 Added,1.2 Clarification Requested,1.3 Clarified,2.0 Accepted

Includes Labor Yes **Includes Equipment Yes** **Includes Materials No**

Owner Comments: *V:1.2-.*

Contractor Comments: *V:1.3-no change to this item*

Item Note: Includes stockpiling excess materials and trimming sides and bottom of trench.

Total: $4,632.58

Division 31 Earthwork Total: $4,632.58

Record #	CSI Number	Description	Type	Quantity	Unit Price	UOM	Factor	Line Total
53	312316130013	Backfilling or Placing Subbase for Trenches with Imported or Stockpiled Materials by Hand		29.00	$42.67	CY	1.0400	$1,286.93

Accepted

History: 1.1 Added,1.2 Clarification Requested,1.3 Clarified,2.0 Accepted

Includes Labor Yes **Includes Equipment Yes** **Includes Materials No**

Owner Comments: *V:1.2-.*

Contractor Comments: *V:1.3-no change to this item*

Total: $1,286.93

Division 31 Earthwork Total: $1,286.93

DRAFT

** Includes Price Changes due to Construction Task Catalog update*

Price Proposal Detail Report

By Division
Version: 2.0
Approved
Proposal Value: $201,481.94
Approved Date: July 7, 2026

Catalog: February 2026 - SDMTS - General Civil

Job Order: MTSJOC457-02

Job Order Name: Grantville TC Bus Bay Improvements

Location: Grantville Station 4510 Alvarado Canyon Rd San Diego, CA 92120

Contractor: ABC General Inc.
Contract Number: PWG457.0-26
Contract Name: JOC General Civil Construction Services (ABC Construction)

Record #	CSI Number	Description	Type	Quantity	Unit Price	UOM	Factor	Line Total
54	312316130016	Compaction of Fill or Subbase for Trenches by Hand		29.00	$48.13	CY	1.0400	$1,451.60

Accepted

History: 1.1 Added,1.2 Clarification Requested,1.3 Clarified,2.0 Accepted

Includes Labor Yes **Includes Equipment Yes** **Includes Materials No**

Owner Comments: *V:1.2-.*

Contractor Comments: *V:1.3-no change to this item*

Total:	**$1,451.60**
Division 31 Earthwork Total:	**$1,451.60**

Record #	CSI Number	Description	Type	Quantity	Unit Price	UOM	Factor	Line Total
55	312316360003	Excavation For Building Foundations And Other Structures By Skid-Steer Loader In Soil		29.00	$10.61	CY	1.0400	$320.00

Accepted

History: 1.1 Added,1.2 Clarification Requested,1.3 Clarified,2.0 Accepted

Includes Labor Yes **Includes Equipment Yes** **Includes Materials No**

Owner Comments: *V:1.2-.*

Contractor Comments: *V:1.3-no change to this item*

Total:	**$320.00**
Division 31 Earthwork Total:	**$320.00**

Record #	CSI Number	Description	Type	Quantity	Unit Price	UOM	Factor	Line Total
56	312316360003	For Up To 20, Add	MOD: 0014	29.00	$10.61	CY	1.0400	$320.00

Accepted

History: 1.1 Added,1.2 Clarification Requested,1.3 Clarified,2.0 Accepted

Includes Labor Yes **Includes Equipment Yes** **Includes Materials No**

Total:	**$320.00**
Division 31 Earthwork Total:	**$320.00**

DRAFT

** Includes Price Changes due to Construction Task Catalog update*

Price Proposal Detail Report

By Division
Version: 2.0
Approved
Proposal Value: $201,481.94
Approved Date: July 7, 2026

Catalog: February 2026 - SDMTS - General Civil

Job Order: MTSJOC457-02

Job Order Name: Grantville TC Bus Bay Improvements

Location: Grantville Station 4510 Alvarado Canyon Rd San Diego, CA 92120

Contractor: ABC General Inc.
Contract Number: PWG457.0-26
Contract Name: JOC General Civil Construction Services (ABC Construction)

Record #	CSI Number	Description	Type	Quantity	Unit Price	UOM	Factor	Line Total
57	312316360017	Backfilling Around Building Foundations And Other Structures By Skid-Steer Loader		29.00	$5.22	CY	1.0400	$157.44

Accepted

History: 1.1 Added,1.2 Clarification Requested,1.3 Clarified,2.0 Accepted

Includes Labor Yes **Includes Equipment Yes** **Includes Materials No**

Owner Comments: *V:1.2-.*

Contractor Comments: *V:1.3-no change to this item*

Total:	**$157.44**
Division 31 Earthwork Total:	**$157.44**

Record #	CSI Number	Description	Type	Quantity	Unit Price	UOM	Factor	Line Total
58	312316360017	For Up To 20, Add **MOD: 0018**		29.00	$5.22	CY	1.0400	$157.44

Accepted

History: 1.1 Added,1.2 Clarification Requested,1.3 Clarified,2.0 Accepted

Includes Labor Yes **Includes Equipment Yes** **Includes Materials No**

Total:	**$157.44**
Division 31 Earthwork Total:	**$157.44**

Record #	CSI Number	Description	Type	Quantity	Unit Price	UOM	Factor	Line Total
59	312316360022	Compaction Of Fill Or Subbase For Building Foundations and Other Structures by Hand		29.00	$48.12	CY	1.0400	$1,451.30

Accepted

History: 1.1 Added,1.2 Clarification Requested,1.3 Clarified,2.0 Accepted

Includes Labor Yes **Includes Equipment Yes** **Includes Materials No**

Owner Comments: *V:1.2-.*

Contractor Comments: *V:1.3-no change to this item*

Total:	**$1,451.30**
Division 31 Earthwork Total:	**$1,451.30**

DRAFT

** Includes Price Changes due to Construction Task Catalog update*

Price Proposal Detail Report

By Division
Version: 2.0
Approved
Proposal Value: $201,481.94
Approved Date: July 7, 2026

Catalog: February 2026 - SDMTS - General Civil

Job Order: MTSJOC457-02

Job Order Name: Grantville TC Bus Bay Improvements

Location: Grantville Station 4510 Alvarado Canyon Rd San Diego, CA 92120

Contractor: ABC General Inc.
Contract Number: PWG457.0-26
Contract Name: JOC General Civil Construction Services (ABC Construction)

Record #	CSI Number	Description	Type	Quantity	Unit Price	UOM	Factor	Line Total
60	312316360024	Rough Grading For Building Foundations And Other Structures by Machine		37.00	$1.38	SY	1.0400	$53.10

Accepted ***History: 1.1 Added,1.2 Clarification Requested,1.3 Clarified,2.0 Accepted***

Includes Labor Yes **Includes Equipment Yes** **Includes Materials No**

Owner Comments: *V:1.2-.*

Contractor Comments: *V:1.3-no change to this item*

User Note: 328 sf

Total:	**$53.10**
Division 31 Earthwork Total:	**$53.10**

Record #	CSI Number	Description	Type	Quantity	Unit Price	UOM	Factor	Line Total
61	312316360026	Finish Grading For Building Foundations And Other Structures by Hand		37.00	$14.23	SY	1.0400	$547.57

Accepted ***History: 1.1 Added,1.2 Clarification Requested,1.3 Clarified,2.0 Accepted***

Includes Labor Yes **Includes Equipment Yes** **Includes Materials No**

Owner Comments: *V:1.2-.*

Contractor Comments: *V:1.3-no change to this item*

Total:	**$547.57**
Division 31 Earthwork Total:	**$547.57**

Record #	CSI Number	Description	Type	Quantity	Unit Price	UOM	Factor	Line Total
62	312316360032	Spread Excess Or Imported Material And Rough Grade On Site By Hand		29.00	$62.16	CY	1.0400	$1,874.75

Accepted ***History: 1.1 Added,1.2 Clarification Requested,1.3 Clarified,2.0 Accepted***

Includes Labor Yes **Includes Equipment Yes** **Includes Materials No**

Owner Comments: *V:1.2-.*

Contractor Comments: *V:1.3-no change to this item*

Total:	**$1,874.75**
Division 31 Earthwork Total:	**$1,874.75**

DRAFT

** Includes Price Changes due to Construction Task Catalog update*

Price Proposal Detail Report

By Division
Version: 2.0
Approved
Proposal Value: $201,481.94
Approved Date: July 7, 2026

Catalog: February 2026 - SDMTS - General Civil

Job Order: MTSJOC457-02

Job Order Name: Grantville TC Bus Bay Improvements

Location: Grantville Station 4510 Alvarado Canyon Rd San Diego, CA 92120

Contractor: ABC General Inc.
Contract Number: PWG457.0-26
Contract Name: JOC General Civil Construction Services (ABC Construction)

Record #	CSI Number	Description	Type	Quantity	Unit Price	UOM	Factor	Line Total
63	312413000019	Finish Grade For Curb		67.00	$1.34	LF	1.0400	$93.37
Accepted		***History: 1.1 Added,1.2 Clarification Requested,1.3 Clarified,2.0 Accepted***						

Includes Labor Yes **Includes Equipment Yes** **Includes Materials No**

Owner Comments: *V:1.2-.*

Contractor Comments: *V:1.3-no change to this item*

Total: $93.37

Division 31 Earthwork Total: $93.37

Record #	CSI Number	Description	Type	Quantity	Unit Price	UOM	Factor	Line Total
64	312514230014	50 Lb. Capacity Gravel Bag With Gravel		50.00	$12.30	BAG	1.0400	$639.60
Accepted		***History: 1.1 Added,1.2 Clarification Requested,1.3 Clarified,2.0 Accepted***	**Demo:**	50.00	$3.23	BAG	1.0400	$167.96

Includes Labor Yes **Includes Equipment Yes** **Includes Materials Yes**

Owner Comments: *V:1.2-.*

Contractor Comments: *V:1.3-no change to this item*

User Note: BMPs

Total: $807.56

Division 31 Earthwork Total: $807.56

32 Exterior Improvements **$24,121.52**

Record #	CSI Number	Description	Type	Quantity	Unit Price	UOM	Factor	Line Total
65	321313330009	10" 4,500 PSI Concrete Paving Assembly		87.00	$148.32	SY	1.0400	$13,419.99
Accepted		***History: 1.1 Added,1.2 Clarification Requested,1.3 Clarified,2.0 Accepted***						

Includes Labor Yes **Includes Equipment Yes** **Includes Materials Yes**

Owner Comments: *V:1.2-.*

Contractor Comments: *V:1.3-no change to this item*

Total: $13,419.99

Division 32 Exterior Improvements Total: $13,419.99

DRAFT

** Includes Price Changes due to Construction Task Catalog update*

Price Proposal Detail Report

By Division
Version: 2.0
Approved
Proposal Value: $201,481.94
Approved Date: July 7, 2026

Catalog: February 2026 - SDMTS - General Civil

Job Order: MTSJOC457-02

Job Order Name: Grantville TC Bus Bay Improvements

Location: Grantville Station 4510 Alvarado Canyon Rd San Diego, CA 92120

Contractor: ABC General Inc.
Contract Number: PWG457.0-26
Contract Name: JOC General Civil Construction Services (ABC Construction)

Record #	CSI Number	Description		Type	Quantity	Unit Price	UOM	Factor	Line Total
66	321313330009	For Up To 100, Add	MOD: 0029		87.00	$56.12	SY	1.0400	$5,077.74
Accepted		***History: 1.1 Added,1.2 Clarification Requested,1.3 Clarified,2.0 Accepted***							
				Includes Labor Yes	**Includes Equipment Yes**	**Includes Materials Yes**			

Total: $5,077.74

Division 32 Exterior Improvements Total: $5,077.74

Record #	CSI Number	Description		Type	Quantity	Unit Price	UOM	Factor	Line Total
67	321613130040	6" x 16" Cast In Place Concrete Curb			67.00	$28.14	LF	1.0400	$1,960.80
Accepted		***History: 1.1 Added,1.2 Clarification Requested,1.3 Clarified,2.0 Accepted***		**Demo:**	50.00	$10.77	LF	1.0400	$560.04
				Includes Labor Yes	**Includes Equipment Yes**	**Includes Materials Yes**			

Owner Comments: *V:1.2-.*

Contractor Comments: *V:1.3-no change to this item*

Total: $2,520.84

Division 32 Exterior Improvements Total: $2,520.84

Record #	CSI Number	Description		Type	Quantity	Unit Price	UOM	Factor	Line Total
68	321613130040	For >50 To 100, Add	MOD: 0079		67.00	$3.46	LF	1.0400	$241.09
Accepted		***History: 1.1 Added,1.2 Clarification Requested,1.3 Clarified,2.0 Accepted***							
				Includes Labor Yes	**Includes Equipment Yes**	**Includes Materials Yes**			

Total: $241.09

Division 32 Exterior Improvements Total: $241.09

DRAFT

** Includes Price Changes due to Construction Task Catalog update*

Price Proposal Detail Report

By Division
Version: 2.0
Approved
Proposal Value: $201,481.94
Approved Date: July 7, 2026

Catalog: February 2026 - SDMTS - General Civil

Job Order: MTSJOC457-02

Job Order Name: Grantville TC Bus Bay Improvements

Location: Grantville Station 4510 Alvarado Canyon Rd San Diego, CA 92120

Contractor: ABC General Inc.
Contract Number: PWG457.0-26
Contract Name: JOC General Civil Construction Services (ABC Construction)

Record #	CSI Number	Description	Type	Quantity	Unit Price	UOM	Factor	Line Total
69	321613130052	6" x 18" Cast In Place Concrete Gutter With 6" Curb And Face - Straight		0.00	$41.28	LF	1.0400	$0.00
Accepted		***History: 1.1 Added,1.2 Clarification Requested,1.3 Clarified,2.0 Accepted***	**Demo:**	17.00	$15.34	LF	1.0400	$271.21

Includes Labor No **Includes Equipment No** **Includes Materials No**

Owner Comments: *V:1.2-.*

Contractor Comments: *V:1.3-no change to this item*

Total:	**$271.21**
Division 32 Exterior Improvements Total:	**$271.21**

Record #	CSI Number	Description	Type	Quantity	Unit Price	UOM	Factor	Line Total
70	321623000002	4" Cast In Place Concrete Sidewalk		162.00	$10.25	SF	1.0400	$1,726.92
Accepted		***History: 1.1 Added,1.2 Clarification Requested,1.3 Clarified,2.0 Accepted***						

Includes Labor Yes **Includes Equipment Yes** **Includes Materials Yes**

Owner Comments: *V:1.2-.*

Contractor Comments: *V:1.3-no change to this item*

Total:	**$1,726.92**
Division 32 Exterior Improvements Total:	**$1,726.92**

Record #	CSI Number	Description	Type	Quantity	Unit Price	UOM	Factor	Line Total
71	321623000002	For >100 To 500, Add **MOD: 0094**		162.00	$1.24	SF	1.0400	$208.92
Accepted		***History: 1.1 Added,1.2 Clarification Requested,1.3 Clarified,2.0 Accepted***						

Includes Labor Yes **Includes Equipment No** **Includes Materials Yes**

Total:	**$208.92**
Division 32 Exterior Improvements Total:	**$208.92**

DRAFT

** Includes Price Changes due to Construction Task Catalog update*

Price Proposal Detail Report

By Division
Version: 2.0
Approved
Proposal Value: $201,481.94
Approved Date: July 7, 2026

Catalog: February 2026 - SDMTS - General Civil

Job Order: MTSJOC457-02

Job Order Name: Grantville TC Bus Bay Improvements

Location: Grantville Station 4510 Alvarado Canyon Rd San Diego, CA 92120

Contractor: ABC General Inc.
Contract Number: PWG457.0-26
Contract Name: JOC General Civil Construction Services (ABC Construction)

Record #	CSI Number	Description	Type	Quantity	Unit Price	UOM	Factor	Line Total
72	321623000007	For Exposed Aggregate Finish In Sidewalk		162.00	$2.65	SF	1.0400	$446.47

Accepted *History: 1.1 Added,1.2 Clarification Requested,1.3 Clarified,2.0 Accepted*

Includes Labor Yes **Includes Equipment Yes** **Includes Materials No**

Owner Comments: *V:1.2-.*

Contractor Comments: *V:1.3-no change to this item*

Total: $446.47

Division 32 Exterior Improvements Total: $446.47

Record #	CSI Number	Description	Type	Quantity	Unit Price	UOM	Factor	Line Total
73	321723130222	Painted Curb		67.00	$2.99	LF	1.0400	$208.34

Accepted *History: 1.1 Added,1.2 Clarification Requested,1.3 Clarified,2.0 Accepted*

Includes Labor Yes **Includes Equipment Yes** **Includes Materials Yes**

Owner Comments: *V:1.2-.*

Contractor Comments: *V:1.3-no change to this item*

Total: $208.34

Division 32 Exterior Improvements Total: $208.34

34 Transportation **$7,513.75**

Record #	CSI Number	Description	Type	Quantity	Unit Price	UOM	Factor	Line Total
74	341193000035	Removal And Disposal Of Concrete Post Footings		46.00	$157.06	EA	1.0400	$7,513.75

Accepted *History: 1.1 Added,1.2 Clarification Requested,1.3 Clarified,2.0 Accepted*

Includes Labor Yes **Includes Equipment Yes** **Includes Materials No**

Owner Comments: *V:1.2-.*

Contractor Comments: *V:1.3-no change to this item*

User Note: Remove the footings for: 9 bollard, 20 shelter, 16 bench, 1 light pole

Total: $7,513.75

Division 34 Transportation Total: $7,513.75

Proposal Total: $201,481.94

Div **The Percentage of Non Pre-Priced on this Proposal: 0.0%**

DRAFT

** Includes Price Changes due to Construction Task Catalog update*

EXHIBIT C
(Subcontractor Listing)

DRAFT

San Diego Metropolitan Transit System
1255 Imperial Ave
San Diego, CA 92101

Subcontractor Report

Date: 7/7/2026

Job Order Contracting

Contract #: PWG457.0-26

Job Order #: MTSJOC457-02

Job Order Title: Grantville TC Bus Bay Improvements

Job Order Value: $201,481.94

Location: Grantville Station

Contractor: ABC General Inc.

Subcontractor: Koch General Engineering

Subcontractor Name	License Number	Describe Nature of Work (Trade)	Certifications	Subcontractor Total	Participation %
Koch General Engineering PO Box 1190, Lakeside, CA 92040	1023489A	New Concrete	No Certification	$98,483.00	48.88%

Summary

Certification Name	Value	% Subcontracted
No Certification	$98,483.00	48.88%
Total	**$98,483.00**	**48.88%**

DRAFT

Agenda Item No. 07

MEETING OF THE SAN DIEGO METROPOLITAN TRANSIT SYSTEM
BOARD OF DIRECTORS

July 30, 2026

SUBJECT:

Federal Transit Administration (FTA) Section 5310 Enhanced Mobility for Seniors and Individuals with Disabilities – SANDAG Cycle 12 – Grant Award

RECOMMENDATION:

That the San Diego Metropolitan Transit System (MTS) Board of Directors:

1) Accept the Section 5310 Enhanced Mobility for Seniors and Individuals with Disabilities Cycle 12 awarded by the San Diego Association of Governments (SANDAG) in the amount of $952,861 for paratransit vehicle procurement; and

2) Authorize $389,907.86 in local matching funds to fully fund the purchase of six (6) Americans with Disabilities Act (ADA) paratransit vehicles.

Budget Impact

FTA Section 5310 grants require at least 20 percent of the total project cost to be funded by local matching funds. MTS will be required to provide $389,907.86 (29.04%) in local matching funds to fully fund the replacement of six (6) ADA paratransit vehicles. If the final invoice for the purchase of vehicles is higher, MTS will pay the difference using local funds to cover the remaining cost. MTS's local match will be funded using State Transit Assistance (STA) from MTS Capital Improvement Program (CIP) 30011228 - Bus Procurement Project.

DISCUSSION:

The FTA provides capital and operating assistance to agencies providing transportation through the FTA Section 5310 Program. These funds are to be apportioned by the Metropolitan Planning Organization (MPO), SANDAG, through a competitive grant application process.

Based on the requirements of this funding opportunity, MTS typically applies for ADA paratransit vehicles, up to the maximum funding availability, which is also consistent with MTS's long-term fleet plan.

On September 15, 2022 (Agenda Item (AI) No. 16), MTS received Board approval to authorize the CEO to submit and execute a Cycle 12 Section 5310 grant application requesting $1,200,000 for seven (7) ADA paratransit vehicle replacements, and to authorize the

San Diego Metropolitan Transit System (MTS) is a California public agency comprised of San Diego Transit Corp., San Diego Trolley, Inc. and San Diego and Arizona Eastern Railway Company (nonprofit public benefit corporations). MTS member agencies include the cities of Chula Vista, Coronado, El Cajon, Imperial Beach, La Mesa, Lemon Grove, National City, Poway, San Diego, Santee, and the County of San Diego. MTS is also the For-Hire Vehicle administrator for multiple cities in San Diego County.

commitment of up to $300,000 in local matching funds to fully fund the purchase of the vehicles, if awarded.

On February 24, 2023 (SANDAG AI 8), SANDAG approved the Cycle 12 Section 5310 grant awards, awarding MTS $952,861 of its original $1.2 million request.

SANDAG utilizes a California Association for Coordinated Transportation / Morongo Basin Transit Authority (CALACT)/(MBTA) purchasing contract to purchase the vehicles. Since the notice of award, the CALACT/MBTA contract pricing has increased significantly due to supply chain issues, causing an increase in matching funds required by MTS to fully fund the purchase of the vehicles. Original application costs were based upon vehicle cost estimates attained at the time of application in 2022.

MTS postponed placing a vehicle order due to reduced paratransit ridership demand resulting from the COVID-19 pandemic. When MTS moved forward in 2025 with procurement, several factors led to further delays. An error in the original vendor quote was identified, as it excluded camera equipment and installation costs, necessitating pricing revisions. In addition, significant delays resulted from price increases under the CALACT contracts. As a result of escalating vehicle prices, MTS requested a scope change in November 2025 to reduce the Cycle 12 vehicle count from seven to six buses to remain within available funding. Additional delays occurred due to new CARB requirements for vehicle purchases, which required an exemption request and approval granted in March 2026.

Further, since the amount awarded was under MTS's initial requested amount of $1.2 million, MTS proposes reducing the quantity of vehicles from seven to six. This will require a higher local match in the amount of $389,907.86 (29.04%) to fully fund all six (6) ADA paratransit vehicles. As of April 2026, the new vehicle pricing and allocation of SANDAG grant funding and MTS local match is as follows:

SANDAG Cycle 12 Section 5310 ADA Paratransit Vehicle Grant			
Vehicle	**Per Vehicle Cost (incl tax and fees)**	**# of Vehicles**	**Total**
Starcraft Class B Ford E450 Propane 64G	$ 223,794.81	6	$1,342,768.86
Funding Breakdown	**SANDAG Share**	**MTS Share**	**Total**
Vehicle #1- #5	$ 179,035.85	$ 44,758.96	$ 1,118,974.05
Vehicle #6	$ 57,681.76	$ 166,113.05	$ 223,794.81
Total	**$ 952,861.00**	**$ 389,907.86**	**$ 1,342,768.86**
**Note that MTS will be responsible for any cost overruns as the SANDAG grant contribution is fixed.*			

Therefore, staff recommends that the Board of Directors to:

1) Accept the Section 5310 Enhanced Mobility for Seniors and Individuals with Disabilities Cycle 12 awarded by SANDAG in the amount of $952,861 paratransit vehicle procurement; and

2) Authorize $389,907.86 in local matching funds to fully fund the purchase of six (6) ADA paratransit vehicles.

/s/ Sharon Cooney
Sharon Cooney
Chief Executive Officer

Key Staff Contact: Julia Tuer, 619.557.4515, Julia.Tuer@sdmts.com

Metropolitan Transit System

Agenda Item No. 08

MEETING OF THE SAN DIEGO METROPOLITAN TRANSIT SYSTEM
BOARD OF DIRECTORS

July 30, 2026

SUBJECT:

Federal Transit Administration (FTA) Section 5310 Enhanced Mobility for Seniors and Individuals with Disabilities – SANDAG Cycle 13 – Grant Award

RECOMMENDATION:

That the San Diego Metropolitan Transit System (MTS) Board of Directors to:

1) Accept the Section 5310 Enhanced Mobility for Seniors and Individuals with Disabilities Cycle 13 awarded by the San Diego Association of Governments (SANDAG) in the amount of $749,642.57 for paratransit vehicle procurement; and

2) Authorize $369,331.48 in local matching funds to fully fund the purchase of five (5) Americans with Disabilities Act (ADA) paratransit vehicles.

Budget Impact

FTA Section 5310 grants require at least 20 percent of the total project cost to be funded by local matching funds. MTS will be required to provide $369,331.48 (33.01%) in local matching funds to fully fund the replacement of five ADA paratransit vehicles. If the final invoice for the purchase of vehicles is higher, MTS will pay the difference using local funds to cover the remaining cost. MTS's local match will be funded using State Transit Assistance (STA) from MTS Capital Improvement Program (CIP) 30011228 - Bus Procurement Project.

DISCUSSION:

The FTA provides capital and operating assistance to agencies providing transportation through the FTA Section 5310 Program. These funds are to be apportioned by the Metropolitan Planning Organization (MPO), SANDAG, through a competitive grant application process.

Based on the requirements of this funding opportunity, MTS typically applies for ADA paratransit vehicles, up to the maximum funding availability, which is also consistent with MTS's long-term fleet plan.

On September 12, 2024 (Agenda Item (AI) No. 22), MTS received Board approval authorizing the CEO to submit and execute a Cycle 13 Section 5310 grant application up to the program's maximum allowable request allowed totaling $1,200,000 for eight (8) ADA paratransit vehicle

San Diego Metropolitan Transit System (MTS) is a California public agency comprised of San Diego Transit Corp., San Diego Trolley, Inc. and San Diego and Arizona Eastern Railway Company (nonprofit public benefit corporations). MTS member agencies include the cities of Chula Vista, Coronado, El Cajon, Imperial Beach, La Mesa, Lemon Grove, National City, Poway, San Diego, Santee, and the County of San Diego. MTS is also the For-Hire Vehicle administrator for multiple cities in San Diego County.

replacements, and to authorize the commitment of up to $300,000 in local matching funds to fully fund the purchase the vehicles, if awarded.

On June 27, 2025 (SANDAG AI 5), SANDAG approved the Cycle 13 Section 5310 grant awards, awarding MTS $848,860.86 of its original $1.2 million request.

On April 27, 2026, SANDAG notified MTS of an administrative error in the Cycle 13 Section 5310 grant award process. Following a review, SANDAG revised and reapproved the grant awards, resulting in a total award amount of $749,642.57 for MTS.

SANDAG utilizes a California Association for Coordinated Transportation / Morongo Basin Transit Authority (CALACT)/(MBTA) purchasing contract to purchase the vehicles. Since the notice of award, the CALACT/MBTA contract pricing has increased significantly due to supply chain issues, causing an increase in matching funds required by MTS to fully fund the purchase of the vehicles. Original application costs were based upon vehicle cost estimates attained at the time of application in 2024. MTS was recently notified that the cost per vehicle has increased significantly since the submittal of the application.

Since the amount awarded was under MTS's initial requested amount, MTS proposes that it reduce the quantity of vehicles from eight to five. This will require a higher local match in the amount of $369,331.48 to fully fund all five (5) ADA paratransit vehicles:

SANDAG Cycle 13 Section 5310 ADA Paratransit Vehicle Grant			
Vehicle	**Per Vehicle Cost (incl tax and fees)**	**# of Vehicles**	**Total**
Starcraft Class B Ford E450 Propane 64G	$ 223,794.81	5	$1,118,974.05
Funding Breakdown	**SANDAG Share**	**MTS Share**	**Total**
Vehicle #1 - #4	$ 179,035.85	$44,758.96	$895,179.24
Vehicle #5	$ 33,499.18	$190,295.63	$223,794.81
Total	**$ 749,642.57**	**$369,331.48**	**$1,118,974.05**
**Note that MTS will be responsible for any cost overruns as the SANDAG grant contribution is fixed.*			

Therefore, staff recommends that the Board of Directors to:

1) Accept the Section 5310 Enhanced Mobility for Seniors and Individuals with Disabilities Cycle 13 awarded by SANDAG in the amount of $749,642.57 for paratransit vehicle procurement; and

2) Authorize $369,331.48 in local matching funds to fully fund the purchase of five (5) Americans with Disabilities Act (ADA) paratransit vehicles.

/s/ Sharon Cooney
Sharon Cooney
Chief Executive Officer

Key Staff Contact: Julia Tuer, 619.557.4515, Julia.Tuer@sdmts.com

Metropolitan Transit System

Agenda Item No. 09

MEETING OF THE SAN DIEGO METROPOLITAN TRANSIT SYSTEM
BOARD OF DIRECTORS

July 30, 2026

SUBJECT:

Bus Brake Subcomponents - Contract Award

RECOMMENDATION:

That the San Diego Metropolitan Transit System (MTS) Board of Directors authorize the Chief Executive Officer (CEO) to:

1) Execute MTS Doc. No. B0797.0-26 (in substantially the same format as Attachment A), with EW Truck & Equipment Co. Inc (EW Truck), to furnish Bus Brake Subcomponents for five (5) years in an amount not to exceed $538,881.64 (inclusive of 7.75% CA sales tax);

2) Execute MTS Doc. No. B0798.0-26 (in substantially the same format as Attachment B), with The Aftermarket Parts Company, LLC dba NFI Parts (NFI), to furnish Bus Brake Subcomponents for five (5) years in an amount not to exceed $281,573.24 (inclusive of 7.75% CA sales tax);

3) Execute MTS Doc. No. B0799.0-26 (in substantially the same format as Attachment C), with Vehicle Maintenance Program, Inc. (VMP), to furnish Bus Brake Subcomponents for five (5) years in an amount not to exceed $690,009.46 (inclusive of 7.75% CA sales tax);

4) Execute MTS Doc. No. B0800.0-26 (in substantially the same format as Attachment D), with Mohawk Manufacturing & Supply Co (Mohawk), to furnish Bus Brake Subcomponents for five (5) years in an amount not to exceed $275,449.64 (inclusive of 7.75% CA sales tax); and

5) Execute MTS Doc. No. B0801.0-26 (in substantially the same format as Attachment E), with Muncie Reclamation and Supply Co (Muncie), to furnish Bus Brake Subcomponents for five (5) years in an amount not to exceed $380,602.18 (inclusive of 7.75% CA sales tax)

Budget Impact

The total contract cost of materials is estimated to be $2,166,516.16 (Attachments A-E). The project will be funded by the San Diego Transit Corporation (SDTC) Maintenance Operating Budget account 311014-545100.

DISCUSSION:

MTS operates a fleet of buses to deliver public transit services within its operating area. The agency has an ongoing fleet inspection, maintenance, and repair program to ensure that buses are kept in a state of good repair and are always in the safest operating condition. To support these efforts, MTS purchases a variety bus brake subcomponents from various vendors to ensure a ready supply of parts for its bus maintenance operations.

Today's proposed actions would issue individual contracts to five (5) vendors for the provision of as-needed bus brake subcomponents. The agreements include fixed annual pricing and established lead times to ensure continuity of supply that will support maintenance's ability to adequately maintain MTS's buses.

On March 20, 2026, MTS released an Invitation for Bid (IFB) solicitation for the provision of Bus Brake Subcomponents for a five (5) year period. The contract term date is August 1, 2026, to July 31, 2031.

To maximize competition and give small businesses an opportunity to bid on the IFB, the solicitation was divided into six parts categories. Groups A- E were awarded in their entirety, while bidders were allowed to bid on any line items for Group F.

1. Group A – Brake Kits
2. Group B – Air Brakes
3. Group C – Brake Pads
4. Group D - Shocks
5. Group E – Air Suspensions
6. Group F – Various Brake Spares

On May 15, 2026, a total of six (6) bids were received. The bidders included:

Bidder	Firm Certification
EW Truck	N/A
NFI	N/A
VMP	N/A
Mohawk	N/A
Muncie	N/A
Neopart Transit LLC	N/A

After the evaluation of all the bids, the lowest responsive and responsible bidders are as follows:

Group	Company Name	Bid Price w/o Tax	CA Sales Tax 7.75%	Total Cost
B & F	EW Truck	$500,122.17	$38,759.47	$538,881.64
A &F	NFI	$261,320.87	$20,252.37	$281,573.24
C & F	VMP	$640,380.01	$49,629.45	$690,009.46
E & F	Mohawk	$255,637.72	$19,811.92	$275,449.64
D & F	Muncie	$353,227.08	$27,375.10	$380,602.18
	Total	**$2,010,687.85**	**$155,828.31**	**$2,166,516.16**

Neopart Transit LLC is excluded from the above list solely because they were not the lowest bidder in any part category.

Based on the competitive bids received, and in comparison with MTS' Independent Cost Estimate (ICE) ($2,097,522.33 exclusive of CA Sales Tax), staff determined these firms' pricing to be fair and reasonable. The contract will be firm-fixed pricing. The not-to-exceed values of the contract are based on staff estimates of the quantity of each part that may be ordered each year, multiplied by that year's unit cost. MTS will only pay for the parts actually ordered. In the event that the estimates of the quantities and funding needed are not sufficient to meet actual demand, a contract amendment increasing the funding authority will be processed according to Board Policy 41 (Signature Authority).

Therefore, staff recommends that the MTS Board of Directors authorize the CEO to:

1) Execute MTS Doc. No. B0797.0-26 (in substantially the same format as Attachment A), with EW Truck, to furnish Bus Brake Subcomponents for five (5) years in an amount not to exceed $538,881.64 (inclusive of 7.75% CA sales tax);

2) Execute MTS Doc. No. B0798.0-26 (in substantially the same format as Attachment B), with NFI, to furnish Bus Brake Subcomponents for five (5) years in an amount not to exceed $281,573.24 (inclusive of 7.75% CA sales tax);

3) Execute MTS Doc. No. B0799.0-26 (in substantially the same format as Attachment C), with VMP, to furnish Bus Brake Subcomponents for five (5) years in an amount not to exceed $690,009.46 (inclusive of 7.75% CA sales tax);

4) Execute MTS Doc. No. B0800.0-26 (in substantially the same format as Attachment D), with Mohawk, to furnish Bus Brake Subcomponents for five (5) years in an amount not to exceed $275,449.64 (inclusive of 7.75% CA sales tax); and

5) Execute MTS Doc. No. B0801.0-26 (in substantially the same format as Attachment E), with Muncie, to furnish Bus Brake Subcomponents for five (5) years in an amount not to exceed $380,602.18 (inclusive of 7.75% CA sales tax)

/s/ Sharon Cooney
Sharon Cooney
Chief Executive Officer

Key Staff Contact: Julia Tuer, 619.557.4515, Julia.Tuer@sdmts.com

Attachments: A. Draft Agreement, MTS Doc No. B0797.0-26
B. Draft Agreement, MTS Doc No. B0798.0-26
C. Draft Agreement, MTS Doc No. B0799.0-26
D. Draft Agreement, MTS Doc No. B0800.0-26
E. Draft Agreement, MTS Doc No. B0801.0-26
F. Scope of Work
G. Bid Summary

Metropolitan Transit System

STANDARD AGREEMENT

FOR

MTS DOC. NO. B0797.0-26

BUS BRAKE SUBCOMPONENTS

THIS AGREEMENT is entered into this _____ day of _____, 2026 in the State of California by and between San Diego Metropolitan Transit System ("MTS"), a California public agency, and the following, hereinafter referred to as "Contractor":

Name: EW Truck and Equipment Company, Inc. Address: 6336 Federal Blvd.

San Diego, (City) CA (State) 92114 (Zip)

Form of Business: S Corp
(Corporation, Partnership, Sole Proprietor, etc.)

Email: nhileman@ewtruck.com

Telephone: (619) 263-2111 X308

Authorized person to sign contracts Nathan Hileman (Name) Parts Manager (Title)

The Contractor agrees to provide goods as specified in the conformed Scope of Work/Technical Specification (Exhibit A), Contractor's Cost/Pricing Form (Exhibit B), and in accordance with the Standard Agreement, including Standard Conditions (Exhibit C), Federal Requirements (Exhibit D), and Forms (Exhibit E).

The contract term is for five (5) years effective August 1, 2026 through July 31, 2031.

Payment terms shall be net 30 days from invoice date. The total cost of this contract shall not exceed $538,881.64 (inclusive of CA 7.75% sales tax) without the express written consent of MTS.

SAN DIEGO METROPOLITAN TRANSIT SYSTEM	EW TRUCK AND EQUIPMENT COMPANY, INC.
By: _____ Sharon Cooney, Chief Executive Officer	By _____
Approved as to form:	
By: _____ Karen Landers, General Counsel	Title: _____

Metropolitan Transit System

STANDARD AGREEMENT

FOR

MTS DOC. NO. B0798.0-26

BUS BRAKE SUBCOMPONENTS

THIS AGREEMENT is entered into this _____ day of _____, 2026 in the State of California by and between San Diego Metropolitan Transit System ("MTS"), a California public agency, and the following, hereinafter referred to as "Contractor":

Name: The Aftermarket Parts Company, LLC

Address: 3229 Sawmill Parkway

Delaware, OH 43015
City State Zip

Form of Business: Corporation
(Corporation, Partnership, Sole Proprietor, etc.)

Email: Kerri.Moloney@NFI.parts

Telephone: (204) 982-8401

Authorized person to sign contracts

Kerri Moloney	Vice President, Sales and Customer Service
Name	Title

The Contractor agrees to provide goods as specified in the conformed Scope of Work/Technical Specification (Exhibit A), Contractor's Cost/Pricing Form (Exhibit B), and in accordance with the Standard Agreement, including Standard Conditions (Exhibit C), Federal Requirements (Exhibit D), and Forms (Exhibit E).

The contract term is for five (5) years effective August 1, 2026 through July 31, 2031.

Payment terms shall be net 30 days from the invoice date. The total cost of this contract shall not exceed $281,573.24 (inclusive of CA 7.75% sales tax) without the express written consent of MTS.

SAN DIEGO METROPOLITAN TRANSIT SYSTEM	THE AFTERMARKET PARTS COMPANY, LLC.
By: _____ Sharon Cooney, Chief Executive Officer	By _____
Approved as to form:	
By: _____ Karen Landers, General Counsel	Title: _____

Metropolitan Transit System

STANDARD AGREEMENT

FOR

MTS DOC. NO. B0799.0-26

BUS BRAKE SUBCOMPONENTS

THIS AGREEMENT is entered into this _____ day of _____, 2026 in the State of California by and between San Diego Metropolitan Transit System ("MTS"), a California public agency, and the following, hereinafter referred to as "Contractor":

Name: Vehicle Maintenance Program

Address: 3595 N. Dixie Highway, Bay #7

Boca Raton, (City) Florida (State) 33431 (Zip)

Form of Business: Corporation
(Corporation, Partnership, Sole Proprietor, etc.)

Email: lindi@vmpparts.com

Telephone: (561) 362-6080

Authorized person to sign contracts: Lindi Brooks (Name) President (Title)

The Contractor agrees to provide goods as specified in the conformed Scope of Work/Technical Specification (Exhibit A), Contractor's Cost/Pricing Form (Exhibit B), and in accordance with the Standard Agreement, including Standard Conditions (Exhibit C), Federal Requirements (Exhibit D), and Forms (Exhibit E).

The contract term is for five (5) years effective August 1, 2026 through July 31, 2031.

Payment terms shall be net 30 days from invoice date. The total cost of this contract shall not exceed $690,009.46 (inclusive of CA 7.75% sales tax) without the express written consent of MTS.

SAN DIEGO METROPOLITAN TRANSIT SYSTEM	VEHICLE MAINTENANCE PROGRAM
By: _____ Sharon Cooney, Chief Executive Officer	By _____
Approved as to form:	
By: _____ Karen Landers, General Counsel	Title: _____

San Diego Metropolitan Transit System (MTS) is a California public agency comprised of San Diego Transit Corp., San Diego Trolley, Inc. and San Diego and Arizona Eastern Railway Company (nonprofit public benefit corporations). MTS member agencies include the cities of Chula Vista, Coronado, El Cajon, Imperial Beach, La Mesa, Lemon Grove, National City, Poway, San Diego, Santee, and the County of San Diego. MTS is also the For-Hire Vehicle administrator for multiple cities in San Diego County.

Metropolitan Transit System

STANDARD AGREEMENT

FOR

MTS DOC. NO. B0800.0-26

BUS BRAKE SUBCOMPONENTS

THIS AGREEMENT is entered into this _____ day of _____, 2026 in the State of California by and between San Diego Metropolitan Transit System ("MTS"), a California public agency, and the following, hereinafter referred to as "Contractor":

Name: Mohawk Manufacturing & Supply Co

Address: 7200 N Oak Park Ave

Niles, ILL 60714
City State Zip

Form of Business: Corporation
(Corporation, Partnership, Sole Proprietor, etc.)

Email: bbrown@mohawkmfg.com

Telephone: 1-847-647-1611

Authorized person to sign contracts Robert L. Brown (Name) President (Title)

The Contractor agrees to provide goods as specified in the conformed Scope of Work/Technical Specification (Exhibit A), Contractor's Cost/Pricing Form (Exhibit B), and in accordance with the Standard Agreement, including Standard Conditions (Exhibit C), Federal Requirements (Exhibit D), and Forms (Exhibit E).

The contract term is for five (5) years effective August 1, 2026 through July 31, 2031.

Payment terms shall be net 30 days from invoice date. The total cost of this contract shall not exceed $275,449.64 (inclusive of CA 7.75% sales tax) without the express written consent of MTS.

SAN DIEGO METROPOLITAN TRANSIT SYSTEM	MOHAWK MANUFACTURING & SUPPLY CO
By: _____ Sharon Cooney, Chief Executive Officer	By _____
Approved as to form: By: _____ Karen Landers, General Counsel	Title: _____

San Diego Metropolitan Transit System (MTS) is a California public agency comprised of San Diego Transit Corp., San Diego Trolley, Inc. and San Diego and Arizona Eastern Railway Company (nonprofit public benefit corporations). MTS member agencies include the cities of Chula Vista, Coronado, El Cajon, Imperial Beach, La Mesa, Lemon Grove, National City, Poway, San Diego, Santee, and the County of San Diego. MTS is also the For-Hire Vehicle administrator for multiple cities in San Diego County.

Metropolitan Transit System

STANDARD AGREEMENT

FOR

MTS DOC. NO. B0801.0-26

BUS BRAKE SUBCOMPONENTS

THIS AGREEMENT is entered into this _____ day of _____, 2026 in the State of California by and between San Diego Metropolitan Transit System ("MTS"), a California public agency, and the following, hereinafter referred to as "Contractor":

Name: Muncie Reclamation and Supply

Address: 3720 S. Madison St.

Muncie, IN 47302
City State Zip

Form of Business: Corporation
(Corporation, Partnership, Sole Proprietor, etc.)

Email: bhuff@abc-companies.com

Telephone: 765-288-1971 Ext 20222

Authorized person to sign contracts Becky Huff (Name) Contract Manager (Title)

The Contractor agrees to provide goods as specified in the conformed Scope of Work/Technical Specification (Exhibit A), Contractor's Cost/Pricing Form (Exhibit B), and in accordance with the Standard Agreement, including Standard Conditions (Exhibit C), Federal Requirements (Exhibit D), and Forms (Exhibit E).

The contract term is for five (5) years effective August 1, 2026 through July 31, 2031.

Payment terms shall be net 30 days from invoice date. The total cost of this contract shall not exceed $380,602.18 (inclusive of CA 7.75% sales tax) without the express written consent of MTS.

SAN DIEGO METROPOLITAN TRANSIT SYSTEM	MUNCIE RECLAMATION AND SUPPLY
By: _____ Sharon Cooney, Chief Executive Officer	By _____
Approved as to form:	
By: _____ Karen Landers, General Counsel	Title: _____

San Diego Metropolitan Transit System (MTS) is a California public agency comprised of San Diego Transit Corp., San Diego Trolley, Inc. and San Diego and Arizona Eastern Railway Company (nonprofit public benefit corporations). MTS member agencies include the cities of Chula Vista, Coronado, El Cajon, Imperial Beach, La Mesa, Lemon Grove, National City, Poway, San Diego, Santee, and the County of San Diego. MTS is also the For-Hire Vehicle administrator for multiple cities in San Diego County.

1. SCOPE OF WORK/TECHNICAL SPECIFICATIONS

1.1. GENERAL

MTS intends to solicit and issue a contract to procure spare parts for its bus brake system (the "Parts") for a five (5) year period under fixed price and guaranteed lead time, to ensure uninterrupted operation of the fleet. The selected Vendor/s shall supply, deliver, warrant and maintain inventory for the specified Parts under the terms of this scope of work (SOW).

The Contractor will, based off historical consumption information provided by MTS, look at avenues to work with original equipment manufacturers (OEMs) and/or aftermarket part manufacturers/distributors across its network that will deliver the following benefits to MTS:

- **Reduce Cumulative Parts Costs** - Utilize the Contractor's buying power/leverage and procurement sources.
- **Improve Parts Availability** - Ensure all identified parts are shipped within an agreed lead time after Purchase Order (P.O.) notification, allowing MTS to meet its service requirements. The Contractor shall also undertake usage analysis, providing feedback and suggestions on how best to drive inventory optimization.
- **Meet Procurement Guidelines** – With respect to all parts included in the initial solicitation, the Contractor shall ensure that each part is procured by the Contractor using competitive procedures that comply with laws of California (as applicable), as well as Federal laws and regulations applicable to MTS.
- **Quality** - Ensure parts provided are either OEM standard or have been accepted as an approved equal by MTS.
- **Alternative and Local Sourcing -** Identify new/additional parts sourcing options to optimize cost, quality and reduce lead times, with an emphasis on local sources where possible.
- **Safety** - Ensure MTS safety standards are met in any program activity per the paragraph below:

  Material Safety Data Sheet (MSDS): It is mandatory for Contractor to supply an MSDS with the shipment of any goods that contains any hazardous material. At any time the content of an MSDS is revised, Contractor is required to provide the new information relevant to the specific hazardous material to MTS.

- **Inventory Management –** Forecasting and demand planning is needed to ensure the Contractor has a sound strategic and tactical framework to maintain delivery service level standards across each part under this contract.

1.2. CONTRACT TERM

The contract term shall be effective for five (5) years. The approximate commencement date for this contract will start from August 1, 2026 through to July 31, 2031.

1.3. SCOPE OF SUPPLY

- The Vendor will provide spare parts compatible with the bus brake system as specified in Attachment A (Parts Bid List).

- All parts under this contract are consumable parts and may include but are not limited to bus brake system breakdown spares, brake pads, axle spares, rotors and similar materials.
- All parts must meet OEM (Original Equipment Manufacturer) or approved aftermarket equivalent quality as provided under the part number and specifications provided by MTS, be new in condition (not used or refurbished unless explicitly approved) and shall be delivered with full documentation (part number, manufacturer, batch/lot number, certificate of conformity where applicable).

1.4. PRICING

Proposed pricing shall be reflected as "ANNUAL" firm fixed price to cover each year of the contract period and not subject to escalation.

1.5. LEAD TIMES

All parts under this contract shall be delivered within 15 business days of receipt of an MTS Purchase Order. Bidders are encouraged to request any additional information that will assist its planning framework to ensure this target is sustained throughout the life of the contract.

1.6. INVENTORY SUPPORT AND PLANNING

MTS shall provide past twenty-four (24) month historical consumption across each part as part of the solicitation bid form. This data is for the purpose of providing a guide for inventory planning. This information is not to be construed as a guarantee of future order quantities and should be used as reference only.

MTS may from time to time during the contract period of performance, elect to increase or decrease parts across the parts list under a mutually agreed process and generally under the process of a contract amendment. The terms of any change across any parts under the contract will be procured using competitive procedures that comply with the laws of California (as applicable), as well as Federal laws and regulations.

The parties may, at the discretion of either party, request quarterly review meetings where necessary to address any issues with planning, service levels, and/or performance issues.

1.7. MANUFACTURING REQUIREMENTS AND MATERIALS

A. **BRAND NAMES AND MODEL NUMBERS**: Specifications in this IFB are not meant to be restrictive but descriptive. Specifications contained herein reflect the minimum acceptable standards and are not intended to restrict competition. No substitute specification may be included. Exceptions may be made only if required to match existing equipment or conform to pre-existing conditions which preclude mismatch of size or color. Substitutions which would include additional delivery time, expenses or modifications of the original design may be rejected.

B. **ITEM DESCRIPTIONS**: All items on all pages of the specification are representative of desired size and dimension and such are intended as guides to bidders in the preparation of bids, Bids of equivalent items will be considered for award if (1) such item are clearly identified by manufactures name, brand, and model number, if any, in the offer, (2) descriptive literature or other such data is provided to show that the equivalent items are

equal to the brand name, and (3) MTS determines such items to be equal in all material respects to the salient specifications of product required.

C. **COMPATIBILITY OR BRAND NAMES:** Bidders shall clearly indicate that it is offering and "equal" product unless the bidder is offering the brand name product(s) referenced in the inquiry. Should any specified brands or models be listed incorrectly, discontinued or improved, the bidder should note such changes in its responses and include the pertinent details regarding the change. In the event the item has been discontinued, the bidder will be allowed to propose comparable goods or services along with the necessary supplemental documentation supporting their position. Refer to Section 3.31 Request for Approved Equals for additional information.

D. EVALUATION AND DETERMINATION OF PRODUCTS (S): The evaluation of bids and the determination as to equality of the product or services proposed shall be the responsibility of MTS and will be based on information provided in the bid and/or information reasonably available to MTS.

1.8. TARIFFS

All quoted pricing should be "EXCLUSIVE" of tariffs. In the event there are tariffs imposed across any items under this contract, the Contractor may request separate payment through the submission of CBP Form 7501 outlining the HTSUS rate (Box 33) and Duty charged (Box 34) for the description (Box 28) and quantity (Box 30 & 31) of the item which should match the MTS Purchase Order particulars.

Tariff charges may be invoiced under a separate charge to each purchase order once approved by MTS.

1.9. INVOICES

Invoices must be sent to the MTS Accounting Department, via email, at ap@sdmts.com. All invoices must have the Purchase Order and contract number clearly displayed to ensure timely payment. MTS will not pay on packing slips, receiving documents, delivery documents, or other similar documents. Invoices must be submitted for payment.

Payment terms shall be net 30 days from invoice date. If MTS rejects an incorrectly submitted invoice and sends it back for correction, the net 30 days restart from the corrected invoice date.

Contractors must also indicate if any of the invoiced amount(s) is for service or work provided by a subcontractor and indicate the amount that will be paid to the subcontractor. Contractors must also comply with the prompt payment requirements in the Prompt Progress Payments section of the Standard Conditions.

1.10. [NOT APPLICABLE] PAYMENT PROCESSING SECURITY AND PAYMENT CARD INDUSTRY (PCI) DATA SECURITY STANDARD (DSS) COMPLIANCE

1.11. [NOT APPLICABLE] HEWLETT PACKARD ENTERPRISE (HPE) REQUIREMENTS

1.12. [NOT APPLICABLE] CISCO MINIUM REQUIREMENTS

1.13. [NOT APPLICABLE] CONTRACTOR'S INFORMATION SECURITY RESPONSIBILITIES

1.14. BUY AMERICA

This scope of work may trigger Buy America and/or Build America Buy America requirements, which apply to construction materials, manufactured products, rolling stock, iron and steel. The below list of definitions and examples is not exhaustive and is only to be used as illustrative and a guidance tool for Contractor compliance.

A. [NOT APPLICABLE] CONSTRUCTION MATERIALS

B. MANUFACTURED PRODUCT

Per IIJA Section 70912 (2)(B), all manufactured products used in the project must be produced in the United States. Examples for manufactured products provided per Appendix A to 49 CFR 661.3 include: Infrastructure projects not made primarily of steel or iron, including structures (terminals, depots, garages, and bus shelters), ties and ballast; contact rail not made primarily of steel or iron; fare collection systems; computers; information systems; security systems; data processing systems; and mobile lifts, hoists, and elevators.

C. [NOT APPLICABLE] ROLLING STOCK

D. IRON OR STEEL

Per IIJA Section 70912 (2)(A), all iron and steel used in the project must be produced in the United States. This means all manufacturing processes, from the initial melting stage through the application of coatings, occurred in the United States. Examples of iron and steel provided per Appendix A to 49 CFR 661.3 include: Items made primarily of steel or iron such as structures, bridges, and track work, including running rail, contact rail, and turnouts.

1.15. [NOT APPLICABLE] SAFETY DATA SHEETS (SDS)

Upon award, Contractors shall email the SDS for materials/ chemicals that will be used or stored at the construction site during the duration of the project, attention Ngan Nguyen, MTS Environmental Health and Safety Specialist at Ngan.Nguyen@sdmts.com for review or comment if needed. The Contractor shall notify the MTS Environmental Health and Safety Specialist if there are changes or updates to the SDS during the term of the contract to ensure the MTS recordkeeping is kept updated throughout the contract. Any disposal of hazardous waste must be communicated to MTS Environmental Health and Safety Specialist for approval prior to disposal.

1.16. [NOT APPLICABLE] NO RIGHT TO POST SIGNS

1.17. WARRANTY

The Contractor is the sole party that warrants that all Parts are free from defects in workmanship and materials for a period of minimum period of 12 months from the date of delivery to MTS or for a period of 3 months from the date of issue and usage by MTS whichever occurs first and that such products will be free of defects in material, workmanship and performance.

All warranty will cover the replacement of defective parts (including freight both ways), labor (if applicable), and any necessary downtime charges (if agreed) due to defective parts.

Bidders shall outline in detail their warranty on the equipment offered, including the method of adjustment in cases of equipment, component or parts failure. Warranty shall also be stated for installation labor, materials, and method of adjustment.

1.18. REPLACEMENT PARTS

Replacement parts and technical support for the specified equipment must be guaranteed by the manufacturer. Manufacturer shall keep parts books and maintenance manuals up-to-date for that period.

1.19. DELIVERY AND ACCEPTANCE

Equipment or any deliverable provided under this contract shall be delivered F.O.B. Imperial Avenue Division (IAD) to MTS, 100 16th Street, San Diego, California 92101 and Kearney Mesa Division (KMD) 4630 Ruffner Road, San Diego, CA 92111.unless otherwise specified, in first class condition, complete and ready for operation, and the Contractor shall assume all responsibility and risk of loss incident to said delivery.

MTS may at its discretion, add or instruct the Contractor to deliver parts under this Contract to other locations where necessary within the San Diego area from time to time

Contractor shall indicate delivery date on the Bid Form unless already specified, in which case, shall be made within the time set forth. Delivery is part of the consideration and must be adhered to as specified.

Contractor will not be held liable for failure to make delivery because of strikes, construction of property, governmental regulations, acts of God or any other causes beyond his control, provided a written extension of time is obtained from MTS.

Upon delivery, MTS will acknowledge receipt of said items or products. Delivery shall not constitute acceptance. Upon inspection and testing (if necessary) by MTS, a determination will be made whether said items or products are in conformance with contract requirements. If found in conformance, MTS shall approve the Contractor's invoice for payment; thereby constituting acceptance. Payment terms begin from this point. If the delivered items or products are found not in compliance, MTS will immediately notify the Contractor, and furnish all details of deficiencies. Contractor shall correct the deficiencies or supply new items or products (at the discretion of MTS) and resubmit for inspection and testing (if necessary).

The Contractor will ensure the following MTS information is clearly listed on its shipping documents/packing slips:

a. Purchase Order
b. Stock Code
c. Part Number
d. Description
e. Order Quantity
f. Shipped Quantity
g. Unit of Measure
h. Product Date of Manufacture (where applicable for shelf-life controlled items)

i. Product Cure Date (where applicable for rubber shelf-life controlled items)
j. Product Expiry Date (where applicable for all shelf-life controlled items)
k. Copy of MSDS (where applicable for any item considered hazardous materials)

All shelf-life controlled items must have a remaining 75% shelf life from the product manufacture date.

All parts must be packaged individually in boxes designed to occupy the least amount of shelf space while ensuring it is insulated against transportation damage to the materials and fully labelled with all specifics of the Purchase Order.

Delivery shall be considered on time if the Part arrives at MTS's delivery location or other agreed delivery point by the date/time specified in the Purchase Order (PO) and in compliance with the shipping terms.

If a delivery is late beyond the guaranteed lead time and in the event the delay causes an impact on MTS operation, MTS may at its discretion purchase the part from a third-party vendor and charge the Contractor the difference in price if any to account for the delay.

Upon receipt, the Buyer will inspect the goods within five (5) business days for obvious transit damage, quantity, and conformance to PO specifications.

Should a part fail inspection (wrong item, damaged, incorrect quantity, incorrect documentation), MTS shall notify the Contractor in writing within thirty (30) business days. The Contractor shall provide an RMA reference and arrange at its cost the return of the rejected part and its prompt replacement under the original MTS Purchase Order within five (5) days of the rejection notification.

1.20. [NOT APPLICABLE] LIQUIDATED DAMAGES

MTS Doc No. B0797.0-26

Grp	#	Material	Material Description	Unit	Manufacturer's Part No.	1st Year Unit Price	2nt Year Unit Price	3rd Year Unit Price	4th Year Unit Price	5th Year Unit Price	EW Truck & Equipment Co Inc 5 YEAR Total
B	1	70004879	VALVE PP1 40 PSI,P-BRAKE-NF	1	BW 276567R	$15.79	$16.37	$16.98	$17.61	$18.26	$3,315.39
B	2	70008797	VALVE, DOUBLE CHECK,(DC-4) - NF-ALL	1	BW 283321	$16.49	$17.10	$17.73	$18.39	$19.07	$355.12
B	3	70009886	VALVE PRESSURE PROTECTION,75 PSI	1	BW 277227R	$20.73	$21.50	$22.29	$23.12	$23.97	$334.83
B	4	70027003	HOSE 3/8" AIR BRAKE	1	BW 285497	$1.05	$1.09	$1.13	$1.17	$1.22	$1,132.00
B	5	70030312	Knob Parking Brake Release	1	BW 101851	$12.82	$13.29	$13.79	$14.30	$14.83	$2,070.90
B	6	70043356	BOOT TREADLE VALVE	1	BW 236982	$4.93	$5.11	$5.30	$5.50	$5.70	$583.88
B	7	70044420	BRAKE PEDAL FULCRUM PIN, NF-ALL	1	5921788	$10.07	$10.44	$10.83	$11.23	$11.65	$867.52
B	8	70065565	Valve, Single Check, NF, Gillig	1	53-00329-000	$18.34	$19.02	$19.72	$20.45	$21.21	$2,863.46
B	9	70078824	AIR DRAIN PETCOCK, MULTI	1	BW 103385	$5.29	$5.49	$5.69	$5.90	$6.12	$256.41
B	10	70082446	DIAPHRAGM QUICK RELEASE VALVE	1	BW 245835	$3.72	$3.86	$4.00	$4.15	$4.30	$640.96
B	11	70085944	VALVE REAR BRAKE RELAY,"R-14"	1	BW 103010R	$39.69	$41.16	$42.68	$44.26	$45.90	$854.76
B	12	70088229	SR-1, SPRING BRAKE VALVE, NF-ALL	1	5994884	$64.00	$66.74	$69.21	$71.77	$74.43	$1,730.75
F	13	70028811	O-RING-#16,HYD PUMP SUPPLY-ALL BUS	1	22617-16	$0.75	$0.78	$0.81	$0.84	$0.87	$97.20
F	14	70034645	Hose 1/2"Air Brake	1	27241	$1.25	$1.29	$1.34	$1.39	$1.44	$1,006.50
F	15	70044073	U-Joint Kit,Trans S,NF,Spicer Brand Only	1	5-675X	$47.45	$49.21	$51.03	$52.91	$54.87	$49,050.24
F	16	70147413	POWER STEERING RES SEAL, RAPIDS	1	6311073	$3.66	$3.80	$3.94	$4.08	$4.23	$315.36
F	17	70203917	CARTRIDGE, AIR DRYER DESSICCANT, GILLIG	1	82-54477-000	$46.38	$48.10	$49.88	$51.72	$53.63	$27,717.81
F	18	70203921	Center Street Caliper, Webb, NF-60	1	KL6900A-02	$994.50	$1,031.30	$1,069.45	$1,109.02	$1,150.06	$214,173.20
F	19	70203922	Center Curb Caliper, Webb, NF-60	1	KR6900A-02	$994.50	$1,031.30	$1,069.45	$1,109.02	$1,150.06	$192,755.88
										Total	$500,122.17
										CA Sales Tax 7.75'	$38,759.47
										Grand Total	$538,881.64

MTS Doc No. B0798.0-26

Grp	#	Material	Material Description	Unit	Manufacturer's Part No.	1st Year Unit Price	2nt Year Unit Price	3rd Year Unit Price	4th Year Unit Price	5th Year Unit Price	NFI 5 YEAR Total
A	1	70058354	BRAKE HARDWARE KIT, FRONT/REAR NF-40	EA	6335367	$135.68	$151.68	$169.91	$190.74	$214.65	$24,154.48
A	2	70062018	KIT #8 BRAKE,MAJOR REAR,AXLE MAN	EA	BKRR15161819	$893.35	$1,000.70	$1,123.40	$1,264.22	$1,426.50	$11,416.34
A	3	70168310	GILLIG FRONT AXLE SEAL KIT #1	EA	BKSLFT02080910	$31.57	$35.37	$39.71	$44.68	$50.42	$49,428.75
A	4	70168369	CTR/REAR AXLE BEARING KIT #4, GILLIG	EA	BKBRCTRR02080910	$2,541.61	$2,847.01	$3,196.11	$3,596.73	$4,058.42	$32,479.76
A	5	70168435	KIT #9,BRK,RR(13 TN AXLE)	EA	BKRR0304050607	$1,112.11	$1,245.74	$1,398.50	$1,573.79	$1,775.81	$28,423.80
A	6	70203909	GILLIG FRONT AXLE BEARING KIT #2	EA	BKBRFT02080910	$1,125.84	$1,261.12	$1,415.76	$1,593.22	$1,797.73	$100,711.38
F	7	70203910	AIR PRESSURE TRANSDUCER, NF-60	EA	358855	$206.63	$223.66	$242.71	$264.14	$288.39	$14,706.36
										Total	$261,320.87
										CA Sales Tax 7.75'	$20,252.37
										Grand Total	$281,573.24

MTS Doc No. B0799.0-26

Grp	#	Material	Material Description	Unit	Manufacturer's Part No.	1st Year Unit Price	2nt Year Unit Price	3rd Year Unit Price	4th Year Unit Price	5th Year Unit Price	VMP 5 YEAR Total
C	1	70162438	BRAKE PADS, DISC, GILLIG	ea	MERITOR KIT2252H3CE	$109.12	$114.86	$120.91	$127.27	$133.97	$144,866.19
C	2	70203967	Brake Pad, Kit, NF-60, Webb Brand Only	ea	WWSD1203	$105.05	$110.58	$116.40	$122.53	$128.97	$312,770.38
F	3	70060657	PURGE VALVE ASM, AD-9, NF-ALL	0	5004338	$54.12	$56.97	$59.97	$63.12	$66.45	$78,462.67
F	4	70164673	FRONT BRAKE CHAMBER, 300,500,600,700	EA	253748	$163.99	$172.62	$181.71	$191.27	$201.34	$24,594.95
F	5	70190793	PURGE VALVE REBUILD KIT, AD-9, NF-ALL	EA	6359856	$23.93	$25.19	$26.52	$27.91	$29.38	$8,507.22
F	6	70197855	Rotor Brake Rear, NF-60, Oem Only	EA	6359347	$149.00	$156.84	$165.10	$173.79	$182.93	$71,178.61
										Total	$640,380.01
										CA Sales Tax 7.75'	$49,629.45
										Grand Total	$690,009.46

MTS Doc No. B0800.0-26

Grp	#	Material	Material Description	Unit	Manufacturer's Part No.	1st Year Unit Price	2nt Year Unit Price	3rd Year Unit Price	4th Year Unit Price	5th Year Unit Price	Mohawk Mfg & Supply Co 5 YEAR Total
E	1	70195008	SPRING, FRONT AIR BELLOW, GILLIG	each	08-70861-000	$177.50	$183.71	$190.14	$196.79	$203.68	$43,783.72
E	2	70200770	Air Spring, Bellow, NF-60 -All Axles,OEM	each	303734	$76.00	$78.66	$81.41	$84.26	$87.21	$130,820.34
F	3	70154062	W/WIPER CONTROL, DASH, NF-ALL	each	232463	$136.88	$141.67	$146.63	$151.76	$157.07	$7,340.10
F	4	70173716	ABS MODULATOR VALVE, NF-ALL	each	6405263	$98.28	$101.72	$105.28	$108.96	$112.77	$6,324.12
F	5	70199246	REAR RADIUS ROD BUSHING KIT, NF-60	each	6407898	$38.73	$40.09	$41.49	$42.94	$44.44	$47,145.63
F	6	70203911	Radius Rod, Upper, Rear, 600, 700	each	290882	$160.43	$166.05	$171.86	$177.88	$184.11	$7,742.97
F	7	70203913	Drag Link End RH Threads, Gillig	each	82-20993-000	$55.57	$57.51	$59.52	$61.60	$63.76	$7,151.04
F	8	70203914	Drag Link End LH Threads, Gillig	each	82-20994-000	$55.22	$57.15	$59.15	$61.22	$63.36	$5,329.80
										Total	$255,637.72
										CA Sales Tax 7.75%	$19,811.92
										Grand Total	$275,449.64

MTS Doc No. B0801.0-26

Grp	#	Material	Material Description	Unit	Manufacturer's Part No.	1st Year Unit Price	2nt Year Unit Price	3rd Year Unit Price	4th Year Unit Price	5th Year Unit Price	Muncie 5 YEAR Total
D	1	70203918	SHOCK ABSORBER, FRONT, NF-RAPID	EA	498170	$156.93	$172.63	$189.90	$208.89	$229.78	$7,665.04
D	2	70203919	SHOCK ABSORBER CENTER AND REAR NF-60	EA	498171	$156.93	$172.63	$189.90	$208.89	$229.78	$7,665.04
D	3	70203920	REAR SHOCK ABSORBER - GILLIG-ALL	EA	99B 3203	$156.93	$172.63	$189.90	$208.89	$229.78	$11,497.56
F	4	70036285	O-RING FOR DRUM BRAKES, NF-40	EA	6312089	$0.50	$0.55	$0.61	$0.67	$0.73	$52.02
F	5	70036475	INNER SEAL, FRONT HUB, NF-40	EA	6312247	$10.15	$11.17	$12.28	$13.51	$14.86	$4,957.60
F	6	70051417	BRAKE SHOE, REAR, NF-40-ALL	EA	6312399	$98.79	$108.67	$119.54	$131.49	$144.64	$8,443.82
F	7	70155267	AIR PRESSURE SENDING UNIT, NF-40	EA	214862	$34.54	$37.99	$41.79	$45.97	$50.57	$2,319.46
F	8	70198538	BRAKE CHAMBER, CENTER AXLE, NF-60	EA	6407941	$566.95	$623.65	$686.01	$754.61	$830.07	$193,832.24
F	9	70199135	FRONT BELLOW,AIR SPRING,300,600,700,ONLY	EA	NF 009865 / GOODYEAR 1R11-179	$78.79	$86.67	$95.34	$104.87	$115.36	$22,608.41
F	10	70199287	GAUGE, DUAL AIR PRESSURE, MULTI	EA	51-69967-000	$191.82	$211.00	$232.10	$255.31	$280.84	$39,816.38
F	11	70203912	HEAD LIGHT ASM, STREETSIDE, LEFT, RAPID	EA	344859	$502.84	$553.12	$608.44	$669.28	$736.21	$46,048.35
F	12	70203915	LOW COOLANT MODULE, GILLIG	EA	13-65224-000	$28.40	$31.24	$34.36	$37.80	$41.58	$5,548.16
F	13	70203916	DRIVERS SEAT LUMBAR 3-SWITCH, GILLIG	EA	82-54002-046	$113.55	$124.91	$137.40	$151.14	$166.25	$2,773.00
										Total	$353,227.08
										CA Sales Tax 7.75%	$27,375.10
										Grand Total	$380,602.18

Total	**$**	**2,010,687.85**
CA Sales Tax 7.75%	**$**	**155,828.31**
Grand Total	**$**	**2,166,516.16**

Metropolitan Transit System

Agenda Item No. 10

MEETING OF THE SAN DIEGO METROPOLITAN TRANSIT SYSTEM
BOARD OF DIRECTORS

July 30, 2026

SUBJECT:

California Department of Transportation (Caltrans) Program of Projects for Federal Fiscal Year (FFY) 2026 Federal Transit Administration (FTA) Section 5311 Formula Funding

RECOMMENDATION:

That the San Diego Metropolitan Transit System (MTS) Board of Directors approve Resolution No. 26-09 (Attachment A), authorizing the use of and application for $458,073 of FFY 2026 Section 5311 funds for operating assistance in rural areas.

Budget Impact

MTS will receive $458,073 in federal FY 2026 Section 5311 operating assistance funds. The Section 5311 program requires a 44.67% local match; accordingly, MTS will provide $372,175 in matching funds. These funds are already included in the assumptions for the FY 2027 Operating Budget approved by the Board on June 18, 2026 (Agenda Item (AI) 20).

DISCUSSION:

The FTA provides funding for capital and operating assistance to agencies providing rural transportation through the Section 5311 Non-Urbanized Area Formula Program. These funds do not come directly to the region but are apportioned to the states. In turn, Caltrans, on behalf of the State of California, reapportions the funds to the region based solely on the regional rural population as a share of the state total rural population. The San Diego Association of Governments (SANDAG) allocates the region's funds to both North County Transit District and MTS based on the relative rural population in each service area.

MTS's FY 2026 Section 5311 apportionment totals $458,073. MTS will utilize the full apportionment and provide the required local match of $372,175 to support FY 2027 rural operations for Routes 838, 888, 891, and 892.

Caltrans requires the submission of a resolution by agency Board of Directors authorizing the submission of a grant application and project programming. Staff have also requested that SANDAG certify it will amend the Regional Transportation Improvement Program in the event of a grant award, as per Caltrans requirements.

Therefore, staff recommend that the MTS Board of Directors approve Resolution No. 26-09 (Attachment A), authorizing the use of and application for $458,073 of FFY 2026 Section 5311 funds for operating assistance in rural areas.

/s/ Sharon Cooney
Sharon Cooney
Chief Executive Officer

Key Staff Contact: Julia Tuer, 619.557.4515, Julia.Tuer@sdmts.com

Attachment: A. Board Resolution 26-09

SAN DIEGO METROPOLITAN TRANSIT SYSTEM

Resolution No. 26-09

Resolution Authorizing Federal Funding Under FTA Section 5311(49 U.S.C. Section 5311) with the California Department of Transportation

WHEREAS, the U.S. Department of Transportation is authorized to make grants to states through the Federal Transit Administration (FTA) to support capital and operating assistance projects for nonurbanized public transit services under Section 5311 of the Federal Transit Act (FTA C 9040.1F and FTA C 9050.1);

WHEREAS, the California Department of Transportation has been designated by the Governor of the State of California to administer Section 5311 grants for transportation projects for the general public for the rural transit and intercity bus;

WHEREAS, the San Diego Metropolitan Transit System (MTS) desires to apply for said financial assistance to operate rural transit service and support capital improvements in San Diego County; and

WHEREAS, MTS has, to the maximum extent feasible, coordinated and consulted with other transportation providers and users in the region (including social service agencies);

NOW, THEREFORE, BE IT RESOLVED, DETERMINED, AND ORDERED that MTS does hereby authorize the Chief Executive Officer, or designated representative, to file and execute any actions necessary on behalf of MTS with the California Department of Transportation to aid in the financing of operating or capital assistance projects pursuant to Section 5311 of the Federal Transit Act (FTA C 9040.1F and FTA C 9050.1), as amended;

1. The Chief Executive Officer is authorized to execute and file all certification of assurances, contracts or agreements or any other document required by the Department.

2. The Chief Executive Officer is to provide additional information as the Department may require in connection with the application for the Section 5311 projects.

3. The Chief Executive Officer is authorized to submit and approve request for reimbursement of funds from the Department for the Section 5311 project(s).

PASSED AND ADOPTED, by the Board of Directors this 30th day of July 2026, by the following vote:

AYES:

NAYS:

ABSENT:

ABSTAINING:

Chairperson
San Diego Metropolitan Transit System

Filed by:

Clerk of the Board
San Diego Metropolitan Transit System

Approved as to form:

Office of the General Counsel
San Diego Metropolitan Transit System

Metropolitan Transit System

Agenda Item No. 11

MEETING OF THE SAN DIEGO METROPOLITAN TRANSIT SYSTEM
BOARD OF DIRECTORS

July 30, 2026

SUBJECT:

California Department of Transportation (Caltrans) Program of Projects for Federal Fiscal Year (FFY) 2026 Federal Transit Administration (FTA) Intercity Bus Program 5311(f) - Competitive Funding

RECOMMENDATION:

That the San Diego Metropolitan Transit System (MTS) Board of Directors approve Resolution No. 26-10 (Attachment A), authorizing the use of and application for $300,000 of FFY 2026 Section 5311(f) – Competitive funding for operating assistance in non-urbanized areas.

Budget Impact

If awarded, MTS will receive federal FY 2026 5311(f) funds in the amount of $300,000 for operating assistance. The 5311(f) has a 44.67% match requirement. MTS will be required to provide minimum matching funds in the amount of $242,201. These funds are already included in the assumptions for the FY 2027 Operating Budget approved by the Board on June 18, 2026 (Agenda Item (AI) 20).

DISCUSSION:

Caltrans administers a statewide competitive grant program wherein transit agencies and non-profit organizations are eligible to apply for up to $300,000 in financial assistance for operations serving areas outside of the federally defined urban boundary. Eligible projects can include existing operations, new services, or service expansion. However, projects must be consistent with state-adopted objectives and meet federal certifications and assurance guidelines. MTS already meets the federal guidelines as an eligible recipient of other federal funds.

MTS is requesting the full eligible amount of $300,000 in FY 2026 5311(f) funds to support the operation of Intercity Route 894 during Fiscal Year 2027.

Caltrans requires the submission of a resolution by agency Board of Directors authorizing the submission of a grant application and project programming. Staff have also requested that the San Diego Associations of Governments certify it will amend the Regional Transportation Improvement Program in the event of a grant award, as per Caltrans requirements.

Therefore, staff recommend that the MTS Board of Directors approve Resolution No. 26-10 (Attachment A), authorizing the use of and application for $300,000 of FFY 2026 Section 5311(f) – Competitive funding for operating assistance in non-urbanized areas.

/s/ Sharon Cooney
Sharon Cooney
Chief Executive Officer

Key Staff Contact: Julia Tuer, 619.557.4515, Julia.tuer@sdmts.com

Attachment: A. Board Resolution 26-10

SAN DIEGO METROPOLITAN TRANSIT SYSTEM

Resolution No. 26-10

Resolution Authorizing Federal Funding Under FTA Section 5311(f)
with the California Department of Transportation

WHEREAS, the U.S. Department of Transportation is authorized to make grants to states through the Federal Transit Administration (FTA) to support capital and operating assistance projects for nonurbanized public transit services under Section 5311(f) of the Federal Transit Act (FTA C 9040.1F and FTA C 9050.1);

WHEREAS, the California Department of Transportation has been designated by the Governor of the State of California to administer Section 5311(f) grants for transportation projects for the general public and for rural transit and intercity bus;

WHEREAS, San Diego Metropolitan Transit System (MTS) desires to apply for said financial assistance to operate rural transit service in San Diego County; and

WHEREAS, MTS has, to the maximum extent feasible, coordinated and consulted with other transportation providers and users in the region (including social service agencies).

NOW, THEREFORE, BE IT RESOLVED, DETERMINED, AND ORDERED that MTS does hereby authorize the Chief Executive Officer, or designated representative, to file and execute any actions necessary on behalf of MTS with the California Department of Transportation to aid in the financing of operating or capital assistance projects pursuant to Section 5311 of the Federal Transit Act (FTA C 9040.1F and FTA C 9050.1), as amended;

1. The Chief Executive Officer is authorized to execute and file all certification of assurances, contracts or agreements or any other document required by the Department.

2. The Chief Executive Officer is to provide additional information as the Department may require in connection with the application for the Section 5311 projects.

3. The Chief Executive Officer is authorized to submit and approve request for reimbursement of funds from the Department for the Section 5311 project(s).

PASSED AND ADOPTED, by the Board of Directors this 30th day of July 2026, by the following vote:

AYES:

NAYS:

ABSENT:

ABSTAINING:

Chairperson
San Diego Metropolitan Transit System

Filed by:

Clerk of the Board
San Diego Metropolitan Transit System

Approved as to form:

Office of the General Counsel
San Diego Metropolitan Transit System

Metropolitan Transit System

Agenda Item No. 12

MEETING OF THE SAN DIEGO METROPOLITAN TRANSIT SYSTEM
BOARD OF DIRECTORS

July 30, 2026

SUBJECT:

Bus Engine and Transmission Overhaul - Contract Award

RECOMMENDATION:

That the San Diego Metropolitan Transit System (MTS) Board of Directors authorize the Chief Executive Officer (CEO) to:

1) Execute MTS Doc. No. B0802.0-26 (in substantially the same format as Attachment A), with Harbor Diesel & Equipment, Inc., dba HD Industries (Harbor Diesel), in the amount of $6,755,731.05 (inclusive of CA 7.75% sales tax) for five (5) years, effective August 1, 2026, for the provision of Rebuilt ZF Transmissions (Group I) services

2) Execute MTS Doc. No. B0803.0-26 (in substantially the same format as Attachment B), with Cummins Inc. dba Cummins Sales and Service (Cummins), in the amount of $14,364,524.83 (inclusive of CA 7.75% sales tax) for five (5) years, effective August 1, 2026, for the provision of In-frame Engine Overhaul (Group II) services

Budget Impact

The total contract cost of materials is estimated to be $21,120,255.88 (Attachments A and B). The project will be funded by the San Diego Transit Corporation (SDTC) Maintenance Operating Budget account 311014-537100 and the MTS Contract Services Fixed Route Operating Budget accounts 801012-537100/820012-537100. The cost for each group is as follows:

Group - Vendor	In-House SDTC	Contract Services	Subtotal	CA Sales Tax	Total
Group I – Harbor Diesel	$3,134,910.00	$3,134,910.00	$6,269,820.00	$485,911.05	$6,755,731.05
Group II - Cummins	$6,134,075.49	$7,197,270.06	$13,331,345.55	$1,033,179.28	$14,364,524.83
Total Board Approval					**$21,120,255.88**

DISCUSSION:

MTS Bus Operations requires engine overhaul and transmission rebuild services to support both internally operated and contracted bus fleets. All buses in the fleet are owned by MTS. Engines and transmissions are critical components that experience significant wear through daily transit operations, including high mileage, frequent stop-and-go driving, and extended service hours. To maintain fleet availability and reliable service, these components must be rebuilt promptly once the need for overhaul or rebuild is identified by bus maintenance staff.

Historically, MTS has relied on qualified vendors to perform rebuild services to provide the specialized expertise needed to restore components in a cost-effective manner and avoid extended vehicle downtime. In addition, MTS requires a comprehensive one-year warranty on all overhauled engines and transmissions. This provides added value by reducing the risk of future repair costs, ensuring contractor accountability for workmanship and parts quality, and helping maintain the long-term reliability of the fleet.

On May 12, 2026, MTS released an Invitation for Bid (IFB) solicitation for the provision of engine and transmission overhauls. The quantities reflected in the bid forms included combined totals for both SDTC and Contract Services.

To maximize competition and give small businesses an opportunity to bid on the IFB, MTS divided the IFB into two (2) groups. Group I (Rebuilt Transmissions) and Group II (Cummins In-Frame Engine Overhaul). Bidders had the option of bidding on one or any combination of the two groups.

On June 9, 2026, a single bid was received for each group from the following companies:

Group	Company Name	Firm Certification	Exclusive of CA Sales Tax	CA Sales Tax 7.75%	Total Cost
Group I	Harbor Diesel	N/A	$6,269,820.00	$485,911.05	$6,755,731.05
Group II	Cummins	N/A	$13,468,780.23	$1,043,830.47	$14,512,610.70

On June 15, 2026, to ascertain that the solicitation was not restrictive, MTS conducted a post-bid survey with prospective bidders requesting their reason(s) for not bidding. Based on the responses received, MTS determined that neither the IFB nor MTS's procurement process played a role in their decision not to participate, and staff proceeded with the IFB as a competitive solicitation.

MTS staff deemed both Harbor Diesel and Cummins to be responsive and responsible. On June 19, 2026, MTS contacted both firms to negotiate the costs. Harbor Diesel declined to adjust their original bid price and submitted a Best and Final Offer (BAFO), which did not change from their original bid in the amounts. Cummins submitted a revised bid in the amount of $14,364,524.83, resulting in an estimated savings of $148,085.87 to MTS.

The final bids are therefore:

Group	Company Name	Firm Certification	Exclusive of CA Sales Tax	CA Sales Tax 7.75%	Total Cost
Group I	Harbor Diesel	N/A	$6,269,820.00	$485,911.05	$6,755,731.05
Group II	Cummins	N/A	$13,331,345.55	$1,033,179.28	$14,364,524.83

Based on a comparison of MTS's Independent Cost Estimate (ICE) for Group I in the amount of $7,432,650.00 (exclusive of CA Sales tax), and Group II in the amount of $14,747,972.14 (exclusive of CA Sales tax), retail/market pricing, and recent comparable purchases made by other agencies, staff deemed both Harbor Diesel and Cummins pricing to be fair and reasonable.

The contracts are set up as "as-needed," which means the full contract amounts will only be spent if the estimated quantities of bus transmission rebuilds and engine overhauls are needed by the in-house and contracted services bus fleets. Conversely, if the need for these services is underestimated, then staff will return to the Board for additional funding based on the actual repair trends identified in the first years of the contract.

Therefore, staff recommends that the MTS Board of Directors authorize the CEO to:

1) Execute MTS Doc. No. B0802.0-26 (in substantially the same format as Attachment A), with Harbor Diesel, in the amount of $6,755,731.05 (inclusive of CA 7.75% sales tax) for five (5) years, effective August 1, 2026, for the provision of Rebuilt ZF Transmissions (Group I) services.

2) Execute MTS Doc. No. B0803.0-26 (in substantially the same format as attachment B), with Cummins, in the amount of $14,364,524.83 (inclusive of CA 7.75% sales tax) for five (5) years, effective August 1, 2026, for the provision of In-frame Engine Overhaul (Group II) services.

/s/ Sharon Cooney
Sharon Cooney
Chief Executive Officer

Key Staff Contact: Julia Tuer, 619.557.4515, Julia.Tuer@sdmts.com

Attachments: A. Draft Agreement, MTS Doc. No. B0802.0-26
B. Draft Agreement, MTS Doc. No. B0803.0-26
C. Scope of Work
D. Contractor's Cost/Pricing Form

Metropolitan Transit System

STANDARD AGREEMENT

FOR

MTS DOC. NO. B0802.0-26

BUS ENGINE & TRANSMISSION OVERHAUL – GROUP I

THIS AGREEMENT is entered into this _____ day of _____, 2026 in the State of California by and between San Diego Metropolitan Transit System ("MTS"), a California public agency, and the following, hereinafter referred to as "Contractor":

Name: Harbor Diesel & Equipment , Inc. dba HD Industries

Address: 537 W. Anaheim St.

Long Beach, CA 90813
City State Zip

Form of Business: Corporation
(Corporation, Partnership, Sole Proprietor, etc.)

Email: bids@harbordiesel.com

Telephone: 562-591-5665

Authorized person to sign contracts: Mike Zupanovich (Name) President (Title)

The Contractor agrees to provide goods as specified in the conformed Scope of Work/Technical Specification (Exhibit A), Contractor's Cost/Pricing Form (Exhibit B), and in accordance with the Standard Agreement, including Standard Conditions (Exhibit C), Federal Requirements (Exhibit D), and Forms (Exhibit E).

The contract term is for five (5) years effective August 1, 2026 through July 31, 2031.

Payment terms shall be net 30 days from invoice date. The total cost of this contract shall not exceed $6,755,731.05 (inclusive of CA 7.75% sales tax) without the express written consent of MTS.

SAN DIEGO METROPOLITAN TRANSIT SYSTEM	HARBOR DIESEL & EQUIPMENT, INC. DBA HD INDUSTRIES
By: _____ Sharon Cooney, Chief Executive Officer	By _____
Approved as to form:	
By: _____ Karen Landers, General Counsel	Title: _____

DRAFT

Metropolitan Transit System

STANDARD AGREEMENT

FOR

MTS DOC. NO. B0803.0-26

BUS ENGINE & TRANSMISSION OVERHAUL – GROUP II

THIS AGREEMENT is entered into this _____ day of _____, 2026 in the State of California by and between San Diego Metropolitan Transit System ("MTS"), a California public agency, and the following, hereinafter referred to as "Contractor":

Name: Cummins Inc. dba Cummins Sales and Service

Address: 310 N Johnson Avenue

El Cajon, CA 92020
City State Zip

Form of Business: Corporation
(Corporation, Partnership, Sole Proprietor, etc.)

Email: ohbids@cummins.com

Telephone: 303-241-6634

Authorized person to sign contracts: Brian Ondre (Name), President – On Highway Business (Title)

The Contractor agrees to provide goods as specified in the conformed Scope of Work/Technical Specification (Exhibit A), the Contractor's Cost/Pricing Form (Exhibit B), and in accordance with the Standard Agreement, including Standard Conditions (Exhibit C), Federal Requirements (Exhibit D), and Forms (Exhibit E).

The contract term is for five (5) years, effective August 1, 2026, through July 31, 2031.

Payment terms shall be net 30 days from the invoice date. The total cost of this contract shall not exceed $14,364,524.83 (inclusive of CA 7.75% sales tax) without the express written consent of MTS.

SAN DIEGO METROPOLITAN TRANSIT SYSTEM	CUMMINS INC. DBA CUMMINS SALES AND SERVICE
By: _____ Sharon Cooney, Chief Executive Officer	By _____
Approved as to form:	
By: _____ Karen Landers, General Counsel	Title: _____

San Diego Metropolitan Transit System (MTS) is a California public agency comprised of San Diego Transit Corp., San Diego Trolley, Inc. and San Diego and Arizona Eastern Railway Company (nonprofit public benefit corporations). MTS member agencies include the cities of Chula Vista, Coronado, El Cajon, Imperial Beach, La Mesa, Lemon Grove, National City, Poway, San Diego, Santee, and the County of San Diego. MTS is also the For-Hire Vehicle administrator for multiple cities in San Diego County.

1. SCOPE OF WORK/TECHNICAL SPECIFICATIONS

MTS intends to solicit and issue a contract to procure spare parts for its bus engines and transmissions (the "Parts") for a five-year period under fixed price and guaranteed lead time, to ensure uninterrupted operation of the fleet. The selected Vendor/s shall supply, deliver, warrant and maintain inventory for the specified Parts under the terms of this Scope of Work (SOW).

The Contractor will, based off historical consumption information provided by MTS, look at avenues to work with original equipment manufacturers (OEMs) and/or aftermarket part manufacturers/distributors across its network that will deliver the following benefits to MTS.

- **Reduce Cumulative Parts Costs** - Utilize the Contractor's buying power/leverage and procurement sources.
- **Improve Parts Availability** - Ensure all identified parts are shipped within an agreed lead time after Purchase Order (P.O.) notification, allowing MTS to meet its service requirements. The Contractor shall also undertake usage analysis, providing feedback and suggestions on how best to drive inventory optimization.
- **Meet Procurement Guidelines** – With respect to all parts included in the initial solicitation, the Contractor shall ensure that each part is procured by the Contractor using competitive procedures that comply with laws of California (as applicable), as well as Federal laws and regulations applicable to MTS.
- **Quality** - Ensure parts provided are either OEM standard or have been accepted as an approved equal by MTS.
- **Alternative and Local Sourcing -** Identify new/additional parts sourcing options to optimize cost, quality and reduce lead times, with an emphasis on local sources where possible.
- **Safety** - Ensure MTS safety standards are met in any program activity per the paragraph below:

Material Safety Data Sheet (MSDS): It is mandatory for Contractor to supply an MSDS with the shipment of any goods that contains any hazardous material. At any time the content of an MSDS is revised, Contractor is required to provide the new information relevant to the specific hazardous material to MTS.

- **Inventory Management –** Forecasting and demand planning is needed to ensure the Contractor has a sound strategic and tactical framework to maintain delivery service level standards across each part under this contract.

1.1. CONTRACT TERM

The contract term shall be five (5) years from the effective date of award. The approximate commencement date for this contract will start from August 1, 2026, through to July 31, 2031.

GROUP I - ZF TRANSMISSONS

The following minimum technical specification represents MTS's requirements for **GROUP I** - Rebuilt ZF transmissions.

The successful bidder (Contractor) will be required to repair transmissions as per given specifications. MTS is a public transportation provider who owns and operates buses on fixed routes throughout the San Diego region. Some of those buses are operated by San Diego Transit Corporation (SDTC) and others are operated by Transdev Services, Inc. (TD).

SDTC operates out of two facilities located at:

1. IMPERIAL AVENUE DIVISION (IAD) – 100 16th Street, San Diego, CA 92101
2. KEARNY MESA DIVISION (KMD) – 4630 Ruffner Street, San Diego, CA 9211

TD operates out of two MTS facilities located at:

1. EAST COUNTY DIVISION (ECD) - 544 Vernon Way, El Cajon, CA. 92020
2. SOUTH BAY MAINTENANCE FACILITY (SBMF) - 3650A Main Street, Chula Vista, CA 91911.

Contractor may be required to pick-up and deliver or make warranty repairs to transmissions and or buses from anyone of these locations.

MTS's designee will contact the successful Bidder when a selected transmission is ready for repair. The Contractor will pick-up the equipment and makes the repairs as stipulated in these specifications. Contractor will return the repaired item in a timely manner as described in the specifications.

All repairs will be warranted as stipulated in these specifications. Contractor must supply with their bid a "Statement of Warranty" detailing the warranty offered on the equipment. It must demonstrate how it meets MTS's stipulated warranty requirements and includes the method of adjustment in cases of equipment, component or parts failure. Warranty shall also be stated for installation, labor, materials and method of adjustment. **If this statement is not provided with your bid submittal, your bid may be found nonresponsive.**

1.2. GENERAL - TECHNICAL SPECIFICATIONS FOR REBUILT ZF ECOMAT & ECOLIFE TRANSMISSIONS

It is the intent of these specifications to describe MTS's requirements with regard to remanufacture of its:

ITEM NO.	MTS MATERIAL / STOCK CODE NO.	OH TYPE	DESCRIPTION
1	70202588 & 70200533	Soft Rebuild	ZF Ecolife Model 6AP1400B, 6AP1700B TRANSMISSIONS
2	70202588 & 70200533	Hard Rebuild	ZF Ecolife Model 6AP1400B, 6AP1700B TRANSMISSIONS
3	70198412	Soft Rebuild	ZF Ecolife 2 Model 6AP1420B & 6AP1200B
4	70198412	Hard Rebuild	ZF Ecolife 2 Model 6AP1420B & 6AP1200B

ITEM NO.	MTS MATERIAL / STOCK CODE NO.	OH TYPE	DESCRIPTION
5	70203926 & 70203927	Soft Rebuild	Ecomat 6HP594
6	70203926 & 70203927	Hard Rebuild	Ecomat 6HP594

in our fleet of coaches. These specifications outline the minimum level of work to be performed and parts to be replaced during the re-manufacturing process in an effort to maintain a consistent level of quality.

The selected re-manufacturer shall have a minimum of four ZF Certified Technicians available to work on MTS transmissions. Please provide a list of your certified technicians with your bid. Re-manufacturer shall be a certified Factory Authorized ZF Heavy Duty On-Highway Product Distributor or approved equal.

All parts required to remanufacture the transmission shall be supplied by the Contractor. All new parts listed in Standard Overhaul Parts shall be captive replacement parts, new genuine OEM ZF.

All parts shall be of the latest design to ensure that the transmission is of the latest configuration for **like** transmission. All repairs performed and assembly procedures used during the remanufacturing process shall be in accordance with applicable ZF specifications and recommended practices. Parts and Technical Service Bulletins are to be supplied as distributed by ZF and are to be used to determine that correct OEM parts are being used.

Core transmissions are to be provided for exchanges that are presumed to be re-manufacturable. These cores are to be externally/visually inspected for any major damage and are to be accepted or rejected at that time. MTS will only pay a transmission core charge if requested by the contractor following inspection at the repair center. MTS implies that all internal/external components are present in supplied cores, but offers no guarantee of component reusability.

During the term of this contract MTS may require changes to the minimum specification. At the time any such changes are mandated, MTS will inform the Contractor of the required technical modifications to the rebuild parts and/or process. The Contractor shall provide MTS with the change, if any, in the unit costs listed in the contract. Upon approval by MTS of any cost change, a formal amendment will be issued which will remain in effect for the duration of the contract, or until additional changes are requested.

1.3. PRICING AND AWARDS

The unit price entries on the bid forms for rebuild transmissions must include all costs related to performing the work, including but not limited to all labor, insurance, tools, materials (excluding tax), and all delivery and packaging costs. MTS will reimburse sales tax at invoicing upon determination and approval of parts that have been purchased as part of the remanufacturing of the particular transmission.

Prior to awarding a contract, MTS may inspect the apparent low bidder's facility to determine the bidder's ability to perform the required services. Such inspection may include assessment of adequate shop space, assessment of adequate secure storage space, assessment of adequate tooling, equipment, and stocked parts and assessment of qualifications of mechanics assigned

to work on MTS transmissions. Inspections shall not be limited to the items listed above. The bidder should also be aware that MTS may award a contract without conducting a pre-award inspection, if it so desires. Award shall be based on the lowest responsive and responsible bidder by a comparison of bids on the overall total price.

1.4. DELIVERY

MTS will notify Contractor as to when a transmission is available for pick-up and repair. This will be done at MTS's discretion on an as needed basis. Pick-up and delivery of the transmission for repair or warranty is the Contractor's responsibility and shall occur at one of the following locations: **SDTC** 100 16th Street, San Diego, CA 92101 (IAD) or 4630 Ruffner Street, San Diego, CA 92111 (KMD), and at MTS Contract services/**TD** facilities: 544 Vernon Way, El Cajon, CA 92020 (ECD) or 3650A Main Street, Chula Vista, CA 91911 (SBD). Pick-up and delivery of transmissions shall be done between the hours of 7:00 a.m. and 5:00 p.m., Monday through Friday.

ESTIMATED ANNUAL REQUIREMENTS

Year	Ecolife		Ecolife 2		Ecomat	
	Soft Rebuild	Hard Rebuild	Soft Rebuild	Hard Rebuild	Soft Rebuild	Hard Rebuild
1	6	36	2	2	4	6
2	8	34	2	4	0	0
3	6	32	4	16	0	0
4	8	32	4	16	0	0
5	6	30	4	20	0	0

The estimated quantities listed on the bid form are for evaluation purposes only. They are approximate annual usage only. MTS's actual usage may vary more or less than the bid form suggests.

Time Frame

1. Three (3) business days for transmission to be picked up, with a quote provided to MTS within 5 business days of pick up.

2. 15 working day clock is put on pause until the repair is approved by MTS with a purchase order assigned to the project.

3. In the event that a critical item “part” is on backorder, the 15 working day clock is put on pause until the needed part is in hand, noting it will be the vendor’s responsibility to advise MTS of the needed item, description, part number and the tentative lead time of said part.

If this delivery schedule is not met and it results in a bus or buses not meeting sign out, the vendor will be charged liquidated damages for each bus that does not meet sign out as a result of the late delivery. The rate for these damages will be **$174.00** per bus, per day for each day sign out is not met.

Upon completion of the re-manufacturing process, all transmissions shall be dyno-tested in accordance with O.E.M. specifications and recommended practices. A copy of the dyno-test report will be furnished when the transmission is returned to MTS.

Serial number integrity will be kept intact throughout the pick-up, repair, and delivery.

All transmissions will be shipped banded to pallets suitable for handling with a forklift.

Delivery cost must be included in Unit Price.

1.5. CONFORMITY

All bidders must conform to the requirements of these specifications, and the equipment and services furnished shall be of first class quality, and the workmanship shall be the best obtainable in the various trades.

The re-manufacturing of the transmissions shall be performed in such a manner as to meet or exceed the requirements set forth by the O.E.M. manufacturer in regards to tolerances and parts quality.

No advantage shall be taken by the manufacturer in the omission of any part, detail or process which make the product less than first class quality, even though such parts, details or processes are not mentioned in these specifications.

1.6. RESPONSIBILITY & WARRANTY

The Contractor shall assume responsibility for all equipment and services provided under this Contract, whether provided by the Contractor or by a subcontractor of its selection. A warranty for a period of 365 days after the installation of the rebuilt transmission into a bus will be accepted by the Contractor, to include any work done by the Contractor or subcontractor, to include failed parts and associated systems installed by them.

Warranty shall include pick-up, delivery, transportation, towing, travel and R&R, if required. R&R will need to have the approval of the contractor to proceed. If the R&R of a warranty transmission is done by MTS personnel, it shall be billed back to the Contractor at a charge of **$537.10**. MTS has determined that removing and replacing a transmission requires ten (10) man-hours at **$53.71** per hour.

Transmission failures during the warranty period resulting from deficient workmanship or part failure shall be responded to by the Contractor in the following manner:

a. MTS will notify the Contractor promptly when a warranted transmission failure has occurred. Contractor shall respond and diagnose repairs within three (3) business days of notification.
b. All warranty repairs shall be made at the MTS Facilities between the hours of 6:00 am and 4:00 pm M-F unless otherwise agreed upon by both parties.
c. If during the year of the warranty period a failure must be repaired at the contractor's facility, either by necessity or by their choosing, said contractor shall be responsible for towing costs.

d. During the entire warranty period, if due to service requirement demands and mutually agreed upon by both parties, a defective transmission is repaired by the MTS repair facility, all warrantable parts used for repair shall be replaced by the Contractor.
e. The Contractor shall reimburse MTS for towing costs incurred due to a warrantable transmission failure while bus is in regular service during the warranty period.

1.7. REPAIR SPECIFICATIONS - ZF Ecolife Model 6AP1400B, 6AP1700B, ZF Ecolife 2 6AP1420B, 6AP1620B & Ecomat 6HP594 TRANSMISSIONS

These procedures will apply to all transmissions repaired:

TEARDOWN AND INSPECTION

a. Disassemble Transmission.
b. All metallic parts of the transmission except bearings and friction faced clutch plates should be cleaned thoroughly with mineral spirits or by steam-cleaning.
c. Bearings that have been in service should be thoroughly washed in mineral spirits.
d. Clean electrical harness connector with good quality cleaning solvent.
e. Inspect bores for wear, scratches, grooves, and dirt. Remove scratches, burrs and foreign matter.
f. Inspect all oil passages, mounting faces, tread openings for damage.
g. Inspect ribs inside main housing for reaction clutch plate wear grooves on the side of the ribs.
h. Inspect oil tracks in the valve body and main housing for porosity, broken lands, cracks, dirt and land imperfections.
i. Upon inspection an itemized estimate shall be submitted to the Manager of Maintenance for approval prior to rebuilding. A determination shall be made by the Manager of Maintenance if the transmission should undergo a “Soft Rebuild” or a “Hard Rebuild”.

SOFT REBUILD

a. Replace all seals, gaskets friction discs. Replace hard parts customarily replaced in an average transmission overhaul for most common overhauls are as follows, internal wire harness, bolts, washers, required shims, and select high wear items such as steel clutch discs, thrust washers, bushings, retaining rings, split rings, magnets, plugs, bearing and other estimated parts.

b. Quality Control documentation for assembled units will follow each transmission through the assembly process and will then have copies attached to each unit at time of delivery.

c. After completion of the transmission assembly, a complete dynamometer test is performed. The test is performed by a qualified ZF Ecolife, ZF Ecolife 2 & Ecomat Transmission trained technician with a minimum of 3 years of experience. The technician will test and record transmission operating temperature, main oil pressure in all ranges, torque converter and lube oil pressure, torque converter oil flow rate, transmission output torque in forward and reverse and shift calibration, retarder operation, in accordance with appropriate ZF Ecolife, ZF Ecolife 2 & Ecomat Transmission dynamometer test procedure.

d. A copy of the dyno run-in sheet shall be provided at the time that transmission is returned to San Diego Transit.

HARD REBUILD

a. Replace all seals, gaskets friction discs. Replace hard parts customarily replaced in an average transmission overhaul for most common overhauls are as follows, internal wire harness, bolts, washers, required shims, and select high wear items such as steel clutch discs, thrust washers, bushings, retaining rings, split rings, magnets, plugs, bearing and other estimated “hard parts”. In addition, the parts listed in the “Soft Rebuild”, “hard parts” can consist of planetary carriers, oil cooler, solenoids, input shafts, ect., found at the time of disassembly and inspection.

b. Quality Control documentation for assembled units will follow each transmission through the assembly process and will then have copies attached to each unit at time of delivery.

c. After completion of the transmission assembly, a complete dynamometer test is performed. The test is performed by a qualified ZF Ecolife, ZF Ecolife 2 & Ecomat Transmission trained technician with a minimum of 3 years of experience. The technician will test and record transmission operating temperature, main oil pressure in all ranges, torque converter and lube oil pressure, torque converter oil flow rate, transmission output torque in forward and reverse and shift calibration, retarder operation, in accordance with appropriate ZF Ecolife, ZF Ecolife 2 & Ecomat Transmission dynamometer test procedure.

d. A copy of the dyno run-in sheet shall be provided at the time that transmission is returned to San Diego Transit.

1.8. REPAIR SPECIFICATIONS - ZF Ecolife Model 6AP1400B, 6AP1700B, Ecolife 2 Model 6AP1420B, 6AP1620B & Ecomat 6HP594 TRANSMISSIONS

Standard Overhaul Parts for ZF Ecolife Model 6AP1400B, 6AP1700B, ZF Ecolife 2 Model 6AP1420B, 6AP1620B & Ecomat 6HP594

Below denotes those parts which must be replaced with new genuine OEM / ZF parts during the remanufacturing process performed on each transmission.

• All gaskets, seals and friction faced steel plates.

Inspection and requalification of all parts is to be made. Dispose of all parts that are not Genuine OEM / ZF products.

All parts to be reused must not be worn beyond the allowable limits of the OEM / ZF.

1.9. MAJOR CASTINGS - ZF Ecolife Model 6AP1400B, 6AP1700B, Ecolife 2 Model 6AP1420B, 6AP1620B & Ecomat 6HP594 TRANSMISSIONS

Thoroughly clean and remove foreign material.

Inspect the housing for cracked areas. If welding is used, they shall maintain the properties of filler material and base metal.

The repaired housing shall be free of nicks, sharp edges and previous defects and shall conform to all dimensions of this specification.

Threads in all taped holes are to be chased. Damaged threads that require repair may be repaired with helicoils, damaged threads that cannot be repaired with helicoils must be machined oversize, heliarc welded, drilled and taped to standard O.E.M. specifications. All cracks are repaired by heliarc welding.

Inspect snap ring grooves, repair as required.

Finished housing must be cleaned thoroughly to remove any filings which occur during the repair procedures.

PLEASE NOTE:

If the transmission housing is internally damaged and cannot be repaired, the Contractor will notify MTS. MTS will authorize the Contractor to replace the housing at a mutually acceptable additional core charge or replace it with one of usable quality.

GROUP II – CUMMINS IN-FRAME ENGINE OVERHAUL

The following minimum technical specification represents MTS's requirements for **GROUP II** - Cummins natural gas engine in-frame overhauls.

The successful bidder (Contractor) will be required to repair engines as per these specifications. MTS is a public transportation provider who owns and operates buses on fixed routes throughout the San Diego region. Some of the buses are operated by San Diego Transit Corporation (SDTC) and others are operated under contract by Transdev Services, Inc. (TD).

SDTC operates out of two facilities located at:

1. IMPERIAL AVENUE DIVISION (IAD) – 100 16th Street, San Diego, CA 92101
2. KEARNY MESA DIVISION (KMD) – 4630 Ruffner Street, San Diego, CA 92111

TD operates out of two MTS facilities located at:

1. EAST COUNTY DIVISION (ECD) - 544 Vernon Way, El Cajon, CA. 92020
2. SOUTH BAY MAINTENANCE FACILITY (SBMF) - 3650A Main Street, Chula Vista, CA 91911.

Contractor may be required to pick-up and deliver or make warranty repairs to engines and or buses from anyone of these locations.

Contractor will be granted a blanket purchase order effective from the date of award for three (3) base years. MTS's designee will contact the Bidder when an engine is ready for repair. Contractor will pick-up the selected equipment and make the repairs as stipulated in these specifications. Contractor will return the repaired item in a timely manner as described in the specifications.

All repairs will be warranted as stipulated in these specifications. Bidder must supply with their bid a statement of warranty detailing their warranty on the equipment offered. It must demonstrate how it meets MTS's stipulated warranty requirements and include the method of adjustment in cases of equipment, component or parts failure. Warranty shall also be stated for installation, labor, materials and method of adjustment.

1.10. PRICING AND AWARD

The unit price entries on the bid forms for overhaul must include all costs related to performing the work, including but not limited to all labor, insurance, tools, materials (excluding tax), and all delivery and packaging costs. MTS will reimburse sales tax at invoicing upon determination and approval of parts that have been purchased as part of the overhaul.

Prior to awarding a contract, MTS may inspect the apparent low bidder's facility to determine the bidder's ability to perform the required services. Such inspection may include assessment of adequate shop space, assessment of adequate secure storage space, assessment of adequate tooling, equipment, and stocked parts and assessment of qualifications of mechanics assigned to work on MTS Engines. Inspections shall not be limited to the items listed above. The bidder should also be aware that MTS may award a contract without conducting a pre-award inspection, if it so desires. Award shall be based on the lowest responsive and responsible bidder by a comparison of bids on the overall total price.

1.11. TECHNICAL SPECIFICATIONS FOR IN-FRAME OVERHAULS OF CUMMINS COMPRESSED NATURAL GAS AND DIESEL ENGINES

IN-FRAME OVERHAULS OF CUMMINS 8.9L ISL G, 8.9L ISL G NZ, L9N, AND ISX-12N COMPRESSED NATURAL GAS ENGINES

MTS is seeking bids from qualified Cummins Compressed Natural Gas (CNG) rebuilders. This specification covers minimum requirements for the in-frame overhauls of, Cummins ISL G 8.9L CNG engines, Cummins ISL G Near Zero CNG engines, Cummins L9N CNG engines, and Cummins ISX-12N CNG engines. Engine overhaul rates may reach as high as approximately 120 engines per year, for all MTS bus operations divisions. Horsepower ratings of these engines include 280hp 320hp and 450hp and are applicable to 2012, 2013, 2014, 2015, 2016, 2017, 2018, 2019, 2020, 2023, 2024 and 2025 model year transit coaches sold in California and owned by MTS.

MTS reserves the right to physically inspect the repair facilities of all potentially successful bidders whom submit bids in response to this Invitation for Bids.

The successful bidder (Contractor) must have a minimum of seven (7) Cummins Certified Natural Gas Technicians available to perform these overhauls. Documentation indicating certification status and the number of certified technicians at Contractor's location shall be submitted with bid.

The Contractor must have the ability to complete each overhaul within ten (10) working days of acquiring bus at their location. Should Contractor not meet this timeframe, beginning on the eleventh (11th) working day and each additional working day thereafter, a liquidated damage amount of **$174.00** per bus, per day shall be assessed and subtracted from that job's invoice.

Regarding the initial engine rebuild; should the selected Contractor's repair facility be within a twenty-five (25) mile radius of MTS headquarters in downtown San Diego, MTS shall be responsible for delivering the bus to the Contractor's facility. Should the selected Contractor's facility be outside said twenty-five (25) mile radius, the Contractor shall be responsible for getting the vehicle to their repair facility. These conditions shall apply whether the vehicle is able to be driven or whether it must be towed. In either case, returning the vehicle back to MTS shall be the Contractor's responsibility. The Contractor shall perform all necessary work at the Contractor's property. No work is to take place on MTS property with the exception of warranty work. Please provide addresses for all applicable repair facilities.

Engines that are provided are presumed to have the ability to be rebuilt. If it is determined through inspection after engine is disassembled that the engine is not able to be rebuilt, i.e., cracked block, the MTS Bus Operations Quality Assurance Department shall be notified prior to continuing the rebuild and a decision shall be made on a case by case basis as to whether the additional cost of the rebuild is justifiable, or if a swing engine shall be provided by MTS.

1.12. ESTIMATED ANNUAL REQUIREMENTS

Contract Year	ISL G					ISL G NZ				
	Basic Overhaul	+A	+B	Cylinder Head	Liner Protrusion Cut	Basic Overhaul	+A	+B	Cylinder Head	Liner Protrusion Cut
1	24	2	2	10	10	8	2	2	8	8
2	24	2	2	10	10	10	2	2	10	10
3	22	2	2	10	10	10	2	2	10	10
4	20	2	2	10	10	8	2	2	10	10
5	20	2	2	10	10	8	2	2	10	10

Contract Year	L9N					ISX 12N				
	Basic Overhaul	+A	+B	Cylinder Head	Liner Protrusion Cut	Basic Overhaul	+A	+B	Cylinder Head	Liner Protrusion Cut
1	20	2	2	10	10	2	1	1	2	1
2	20	2	2	10	10	2	1	1	2	1
3	22	2	2	10	10	4	1	1	2	1
4	20	2	2	10	10	4	1	1	2	1
5	24	2	2	10	10	4	1	1	2	1

The quantities listed above and on the bid form/s are for bidding purposes only. They are approximate annual estimates only. MTS' actual In-frame Overhaul quantities may vary more or less than the bid form/s suggests.

1.13. SCOPE OF WORK

The rebuilding of the engines shall be performed in such a manner as to meet or exceed the requirements set forth by Cummins Corporation specifications in regards to tolerance and parts quality.

All machined surfaces are to be inspected and replaced as necessary to ensure tolerances (i.e. block line boring, deck height, etc.).

Each completed engine overhaul shall have the engine run-in and tested, to include chassis dynamometer testing meeting the following criteria:

1. Run bus on chassis dynamometer for a minimum of 15 minutes to check for leaks & horsepower.
2. Record horsepower and submit an in-site datasheet with the following information:

    a. Absolute Intake Manifold Pressure
    b. Air Fuel Ratio Compensation
    c. Air Fuel Ratio Deviation
    d. Closed Loop
    e. Coolant Temperature
    f. Engine Speed
    g. Fuel Control Valve Correction
    h. Gas Mass Flow Deviation
    i. GCM Accelerator Pedal Position
    j. Intake Manifold Temperature

k. Mixer Inlet Boost
l. Percent Fuel Control Valve
m. Percent Wastegate Control Valve

All engines shall utilize standard “std” bearing inserts with no reduction in crankshaft bearing journal size. Engine blocks and cylinder heads are not to be welded as to make usable again. Completed engine shall be painted from top to bottom. Any and all aspects of the rebuilt engine shall meet Federal and California Air Resources Board (CARB) regulations regarding air quality/emissions/noise. Any parts improvements, i.e., cylinder kits, pistons, etc., developed or approved by Cummins Corporation during the term of this contract, which increases the piston ring life and/or engine life, shall be utilized in the overhauled units. Any gaskets or engine sealing improvements developed or approved by Cummins Corporation during the term of this contract shall be utilized in the overhauled units.

Cylinder heads should be reused whenever feasible. The contractor is responsible for performing an initial inspection and leak test to assess the condition of each cylinder head to determine its condition. All testing shall be documented and provided upon request. Necessary repairs should be completed as part of this process, and all required parts must be included in the scope of work.

Any cylinder head found to be cracked, exhibiting damage to the valve head, or containing broken valves shall be replaced.

The contractor shall perform all cylinder liner and block counterbore work according to the OEM’s technical specifications for the engines listed, including but not limited to, surface finishes and liner protrusion.

The Contractor shall be responsible for all necessary work to ensure that cylinder liner protrusion is set to OEM specifications. This shall include, but is not limited to:

a) Pre-installation measurement and documentation of all cylinder counterbores.
b) Machining of cylinder counterbores as required to meet OEM specifications for depth and surface finish.
c) Installation of new cylinder liners and necessary shims to achieve the specified protrusion.
d) Post-installation measurement and documentation of final liner protrusion. All measurements shall be taken. A copy of all measurements shall be provided to MTS.

Final liner protrusion must be within the range of OEM specified range. The variation between adjacent liners shall not exceed OEM specified tolerance.

The Contractor warrants all work performed and materials supplied under this contract to be free from defects in workmanship for a period of 24 months/unlimited mileage from repair date. In the event of a head gasket failure, liner crack, or other related damage caused by incorrect liner protrusion, the Contractor shall be liable for all necessary repairs at no additional cost to MTS. All warranty work will be performed using OEM-approved parts and procedures.

1.14. WARRANTY

The rebuilt engines shall have warranty coverage of 24 months/unlimited mileage from repair date. Both years shall include all parts and labor.

Engine failures during the warranty period resulting from deficient workmanship or part failure shall be responded to by the Contractor in the following manner:

a. MTS will notify the Contractor promptly when a warranted engine failure has occurred. Contractor shall respond and diagnose repairs within 24 hours of notification.
b. All warranty repairs shall be made at the MTS Facilities between the hours of 8:00 am and 4:00 pm M-F unless otherwise agreed upon by both parties.
c. If during the first year of the warranty period a failure must be repaired at the contractor's facility, either by necessity or by their choosing, said contractor shall be responsible for towing costs.
d. During the entire two year warranty period, if due to service requirement demands and mutually agreed upon by both parties, a defective engine is repaired by the MTS repair facility, all warrantable parts used for repair shall be replaced by the Contractor.
e. The Contractor shall reimburse MTS for towing costs incurred due to a warrantable engine failure while bus is in regular service during the first year of the warranty period.
f. Unless their failure is caused by the failure of a warranted component, belts and hoses shall be exempt from warranty coverage.

NOTE: Regarding the initial engine rebuild, the Contractor shall perform all necessary work at the Contractor's property. No work is to take place on MTS property with the exception of warranty work and repairs of liner protrusion.

1.15. PARTS REPLACMENT

All parts installed during the overhaul and warranty period must be new genuine Cummins Parts and Cummins Recon® Parts. All filters shall be Fleetguard product or approved equals.
Key engine parts not replaced during overhaul, but reused after inspection, in accordance with Cummins guidelines shall be as follows:

a. Cylinder Block
b. Crankshaft
c. Camshaft, if failed: inspect Camshaft Bushings & Push Rods for reuse
d. Camshaft Gear
e. Connecting Rods
f. Rocker Lever Assemblies
g. Lubricating Oil Pan Valve Assembly
h. Clean and Inspect Charge Air Cooler (CAC)
i. 3 Piece Exhaust Manifold

Cylinder Head

If inspection shows the cylinder head has failed on the ISL G 8.9, ISL G NZ, or L9N, the following must be completed with parts:

Qty	Part #	Description
1	3965010	Cylinder Head (if failed)
1	5529517	Cylinder Head Gasket

Overhaul A

If inspection shows the Crankshaft (b) has failed on the ISL G 8.9, ISL G NZ, or L9N the Basic overhaul must be completed, plus the following parts:

QTY	PART #	DESCRIPTION
1	3965010	Crankshaft
4	3950161	Bolts
1	3972345	Speed Indicator
1	5317051	Dowel Pin
1	3918776	Crankshaft Gear
1	5259499	Rear Main Seal
1	3939353	Rear Carrier Gasket
1	3944293	Gear Housing Gasket

Overhaul B

If inspection shows the Camshaft (c) has failed on the ISL G 8.9, ISL G NZ or L9N the Basic overhaul must be completed, plus the following parts:

QTY	PART #	DESCRIPTION
1	3944001	Camshaft Thrust Support
1	3902332	Woodruff Key
1	4944670	Connecting Rod ISLG 8.9 (ISLG NZ P/N 5289332RX)
1	3938163	Camshaft
1	5284141	Camshaft Gear
12	3945866	Tappets

Below are the lists of minimum parts that shall be replaced during basic engine overhauls for each of the four (4) engine models currently operated by MTS:

#1) ISL G 8.9 L

BASIC OVERHAUL

QTY	PART #	DESCRIPTION
1	5472934	Kit, PMM Piston Upgrade
28	70520Q	Oil, 1QT Premium Blue GEO
1	CORF QT	CAL Oil Recycle Fee QT
1	LF9009	PAC, LF
1	3930408	Gasket, Oil Pan
1	4932615	Gasket, Connection
1	3104230	Gasket, EXH Gas RCN Valve
1	51091	Seal, Grommet
1	5348546RX	Head, Cylinder
1	4933818D	Head, Cylinder (CLEAN)

QTY	PART #	DESCRIPTION
1	4933818D	Head, Cylinder (DIRTY)
1	3886396	6.2 Calibration FLT REG.
6	5473009	Kit, Spark Plug
2	3163075	Paint
2	3824510	Cleaner, Contact
2	2420C	Brake Cleaner

QTY	Part #	Description
1	3967014	Dampener
1	5579235	Overhaul Kit
4	3103015	Grommet Seal
28	C891001QT	OIL, 1QT PREMIUM BLUE GEO
1	NG5900	NG PAC
1	5478594	Thermostat
1	3288656	V Ribbed Belt
1	4376312	EGR Cooler Kit (Replaces Core PN 4900739D)
4	3049221	O-Ring Seal
1	5482154	Fuel Flow Sensor
1	3929938	Pressure Module Gasket
1	4997684	Fuel Flow Valve
1	3925626	Seal Kit
1	4942430	V Ribbed Belt
1	5579022	Water Pump
4	3818824	Regular Hexagon Nut
4	5286984	Stud
1	5357731RX	HX35GAS Turbocharger (Replaces Core PN 3802678D)
1	5449240	Lubricating Oil Pump
1	5403905	Lube Oil Cooler Cover Gasket
1	WF2073	WF PKG
12	CC2825	ES EC EG Cool
1	AF1817-M	Air Filter
2	5400509	Oxygen Sensor
12	3930249	Hex Flange Screw Head Cap
1	3933071	O Ring
1	3933070	O Ring
1	3164067	Sealant
2	4620	Brake Cleaner
1	S1091	Seal

#2) ISL G NZ

BASIC OVERHAUL

QTY	PART #	DESCRIPTION
1	5472934	Kit, PMM Piston Upgrade
28	70520Q	Oil, 1QT Premium Blue GEO
1	CORF QT	CAL Oil Recycle Fee QT
1	LF9009	PAC, LF
1	3930408	Gasket, Oil Pan
1	4932615	Gasket, Connection
1	3104230	Gasket, EXH Gas RCN Valve
1	51091	Seal, Grommet
1	5348546RX	Head, Cylinder
1	4933818D	Head, Cylinder (CLEAN)
1	4933818D	Head, Cylinder (DIRTY)
1	3886396	6.2 Calibration FLT REG.
6	5473009	Kit, Spark Plug
2	3163075	Paint
2	3824510	Cleaner, Contact
2	2420C	Brake Cleaner

QTY	Part #	Description
1	3967014	Dampener
1	5579235	Overhaul Kit
1	5477889	Low Pressure Regulator
1	5491911	ECM
4	3103015	Grommet Seal
28	C891001QT	OIL, 1QT PREMIUM BLUE GEO
1	NG5900	NG PAC
1	5478594	Thermostat
1	3288656	V Ribbed Belt
1	4376312	EGR Cooler Kit
4	3049221	O-Ring Seal
1	5482154	Fuel Flow Sensor
1	3929938	Pressure Module Gasket
1	4997684	Fuel Flow Valve
1	3925626	Seal Kit
1	4942430	V Ribbed Belt
1	5579022	Water Pump
4	3818824	Regular Hexagon Nut

QTY	Part #	Description
4	5286984	Stud
1	3799931RX	HX35GAS Turbocharger
1	5449240	Lubricating Oil Pump
1	3918174	Oil Cooler Core Gasket
1	5403905	Lube Oil Cooler Cover Gasket
1	WF2073	WF PKG
12	CC2825	ES EC EG Cool
1	AF1817-M	Air Filter
2	5400509	Oxygen Sensor
12	3930249	Hex Flange Screw Head Cap
1	3933071	O Ring
1	3933070	O Ring
1	3164067	Sealant
1	S1091	Seal

#3) L9N

BASIC OVERHAUL

QTY	Part #	Description
1	5472934	Kit, PMM Piston Upgrade
28	70520Q	Oil, 1QT Premium Blue GEO
1	CORF QT	CAL Oil Recycle Fee QT
1	LF9009	PAC, LF
1	3930408	Gasket, Oil Pan
1	4932615	Gasket, Connection
1	3104230	Gasket, EXH Gas RCN Valve
1	51091	Seal, Grommet
1	5348546 RX	Head, Cylinder
1	4933818 D	Head, Cylinder (CLEAN)
1	4933818 D	Head, Cylinder (DIRTY)
1	3886396	6.2 Calibration FLT REG.
6	5473009	Kit, Spark Plug
2	3163075	Paint
2	3824510	Cleaner, Contact
2	2420C	Brake Cleaner
1	5491911	ECM
1	5477889	Pressure Regulator Valve

QTY	Part #	Description
1	3967014	Damper
1	5579235	Overhaul Kit
6	5473009	Spark Plug Kit
4	3103015	Grommet Seal
28	891001QT	OIL, 1QT PREMIUM BLUE GEO
1	NG5900	NG PAC
1	5478594	Thermostat
1	3288656	V Ribbed Belt
1	4376312	EGR Cooler Kit
4	3049221	O-Ring Seal
1	5482154	Fuel Flow Sensor
1	3929938	Pressure Module Gasket
1	4997684	Fuel Flow Valve
1	4942430	V Ribbed Belt
1	5579022	Water Pump
4	3818824	Regular Hexagon Nut
4	5286984	Stud
1	5357731RX	HX35GAS Turbocharger
1	5449240	Lubricating Oil Pump
1	3918174	Oil Cooler Core Gasket
1	5403905	Lube Oil Cooler Cover Gasket
1	WF2073	WF PKG
12	CC2825	ES EC EG Cool
1	AF1817-M	Air Filter
1	5400509	Oxygen Sensor
12	3930249	Hex Flange Screw Head Cap
1	3933071	O Ring
1	3933070	O Ring
1	3164067	Sealant
2	4620	Brake Cleaner
1	S1091	Seal

#4) ISX-12N

BASIC OVERHAUL

QTY	PART #	DESCRIPTION
1	5579132	Overhaul Kit

QTY	PART #	DESCRIPTION
2	3104230	GASKET,EXH GAS RCN VALVE
12	4965698	SCREW,HEX FLANGE HEAD CAP
1	4960214	SEAL,OIL
1	4975215	GASKET,LUB OIL CLR HSG
1	2883309	SEAL,PLATE
1	2870121	GASKET,COVER PLATE
1	3685173	SEAL,OIL
1	4318947	THERMOSTAT
2	4952629	Oil Cooler Thermostat
1	2888049	DAMPER,VISCOUS VIBRATION
1	4965487	CORE,COOLER
2	5415562	SENSOR,OXYGEN
4	4298975	NUT,LOCK
4	4298242	STUD
3	3678786	SEAL,O RING
3	3627695	SEAL,O RING
1	4311995RX	HEAD,CYLINDER
1	5320544D	HEAD, CYLINDER
1	2874332RX	ROD,ENGINE CONNECTING
1	2874332D	ROD, ENGINE CONNECTING
1	4309498RX	KIT,EXH RCN COOLER
1	4315909D	KIT, EGR COOLER
1	2870249NX	PUMP,WATER
1	2870249D	PUMP,WATER LD-ISF EURO
1	5455781RX	KIT,TURBOCHARGER
1	3802678D	TURBO,HX35W
1	WF2127	PAC, WF

QTY	PART #	DESCRIPTION
1	4374075RX	PUMP,LUBRICATING OIL
1	2883218D	PUMP,LUBE LD-ISF EURO
48	C89100QT	OIL, 1QT PREMIUM BLUE GEO
48	CORF QT	CAL OIL RECYCLE FEE/QT
2	3824510	CLEANER, QD CONTACT
2	4620	BRAKE CLEANER
2	3163075	PAINT
18	CC2825	ES COMP PG
1	3164067	SEALANT
2	NG5900	PAC, NG

1.16. TARIFFS

All quoted pricing should be “EXCLUSIVE” of tariffs. In the event there are tariffs imposed across any items under this contract, the Contractor may request separate payment through the submission of CBP Form 7501 outlining the HTSUS rate (Box 33) and Duty charged (Box 34) for the description (Box 28) and quantity (Box 30 & 31) of the item which should match the MTS Purchase Order particulars.

Tariff charges may be invoiced under a separate charge to each purchase order once approved by MTS.

1.17. INVOICES

Invoices must be sent to the MTS Accounting Department, via email, at ap@sdmts.com. All invoices must have the Purchase Order and contract number clearly displayed to ensure timely payment. MTS will not pay on packing slips, receiving documents, delivery documents, or other similar documents. Invoices must be submitted for payment.

Payment terms shall be net 30 days from invoice date. If MTS rejects an incorrectly submitted invoice and sends it back for correction, the net 30 days restart from the corrected invoice date.

Contractors must also indicate if any of the invoiced amount(s) is for service or work provided by a subcontractor and indicate the amount that will be paid to the subcontractor. Contractors must also comply with the prompt payment requirements in the Prompt Progress Payments section of the Standard Conditions.

1.18. [NOT APPLICABLE] PAYMENT PROCESSING SECURITY AND PAYMENT CARD INDUSTRY (PCI) DATA SECURITY STANDARD (DSS) COMPLIANCE

1.19. [NOT APPLICABLE] HEWLETT PACKARD ENTERPRISE (HPE) MINIMUM REQUIREMENTS

1.20. [NOT APPLICABLE] CONTRACTOR'S INFORMATION SECURITY RESPONSIBILITIES

1.21. BUY AMERICA

This scope of work may trigger Buy America and/or Build America Buy America requirements, which apply to construction materials, manufactured products, rolling stock, iron and steel. The below list of definitions and examples is not exhaustive and is only to be used as illustrative and a guidance tool for Contractor compliance.

A. [NOT APPLICABLE] CONSTRUCTION MATERIALS

B. MANUFACTURED PRODUCT

Per IIJA Section 70912 (2)(B), all manufactured products used in the project must be produced in the United States. Examples for manufactured products provided per Appendix A to 49 CFR 661.3 include: Infrastructure projects not made primarily of steel or iron, including structures (terminals, depots, garages, and bus shelters), ties and ballast; contact rail not made primarily of steel or iron; fare collection systems; computers; information systems; security systems; data processing systems; and mobile lifts, hoists, and elevators.

C. [NOT APPLICABLE] ROLLING STOCK

D. [NOT APPLICABLE] IRON OR STEEL

1.22. SAFETY DATA SHEETS (SDS)

Upon award, Contractors shall email the SDS for materials/ chemicals that will be used or stored at the construction site during the duration of the project, attention Ngan Nguyen, MTS Environmental Health and Safety Specialist at Ngan.Nguyen@sdmts.com for review or comment if needed. The Contractor shall notify the MTS Environmental Health and Safety Specialist if there are changes or updates to the SDS during the term of the contract to ensure the MTS recordkeeping is kept updated throughout the contract. Any disposal of hazardous waste must be communicated to MTS Environmental Health and Safety Specialist for approval prior to disposal.

1.23. [NOT APPLICABLE] NO RIGHT TO POST SIGNS

1.24. WARRANTY

Bidders shall outline in detail their warranty on the equipment offered, including the method of adjustment in cases of equipment, component or parts failure. Warranty shall also be stated for installation labor, materials, and method of adjustment.

1.25. REPLACEMENT PARTS

Replacement parts and technical support for the specified equipment must be guaranteed by the manufacturer; to be available for a ten (10) year period from the date of purchase. Manufacturer shall keep parts books and maintenance manuals up-to-date for that period.

1.26. DELIVERY AND ACCEPTANCE

Equipment or any deliverable provided under this contract shall be delivered F.O.B to various locations as assigned by project manager, unless otherwise specified, in first class condition,

complete and ready for operation, and the Contractor shall assume all responsibility and risk of loss incident to said delivery.

Contractor shall indicate delivery date on the Bid Form unless already specified, in which case, shall be made within the time set forth. Delivery is part of the consideration and must be adhered to as specified.

Contractor will not be held liable for failure to make delivery because of strikes, construction of property, governmental regulations, acts of God or any other causes beyond his control, provided a written extension of time is obtained from MTS.

Upon delivery, MTS will acknowledge receipt of said items or products. Delivery shall not constitute acceptance. Upon inspection and testing (if necessary) by MTS, a determination will be made whether said items or products are in conformance with contract requirements. If found in conformance, MTS shall approve the Contractor's invoice for payment; thereby constituting acceptance. Payment terms begin from this point. If the delivered items or products are found not in compliance, MTS will immediately notify the Contractor, and furnish all details of deficiencies. Contractor shall correct the deficiencies or supply new items or products (at the discretion of MTS) and resubmit for inspection and testing (if necessary).

1.27. LIQUIDATED DAMAGES – APPLIES TO GROUPS I AND II

General

Liquidated damage requirements are appropriate if the parties to a contract may reasonably expect to incur damages in the form of increased Project costs resulting from the late completion of the contract, and if the extent or amount of such damages would be difficult or impossible to determine after the delay has occurred. Accordingly, any liquidated damages for this contract shall be at a specific rate per day for each day of overrun in contract time; and the rate will be specified in the third-party contract and will comply with any other special liquidated damages restrictions FTA might impose. Any liquidated damages recovered shall be credited to the Project account involved unless the Federal Government permits otherwise.

Rates

MTS has established a liquidated damage daily rate of $174.00 per bus, per day.

Appeal Process

If the Contractor feels liquidated damages are being imposed unjustly, the Contractor can file an appeal with the Contract Officer within twenty-four (24) hours of the notification of impending liquidated damages. The letter must provide details of the situation and why the Contractor feels the liquidated damages are unjust. The Contract Officer shall review the situation, and if necessary, meet with the Contractor to provide an opportunity to state their reasons why liquidated damages should not be assessed. The Contract Officer shall render a decision.

If the Contractor feels the decision is not acceptable and the situation warrants further consideration, appeal reconsideration may be filed with the Manager of Procurement. The Manager of Procurement shall review the reconsideration, and a final determination shall be made. The decision of the Manager of Procurement shall be final. No other appeals shall be heard for this particular incident.

BUS ENGINE & TRANSMISSION OVERHAUL AND ENGINE PARTS IFB - GROUP II
B0790.0-26
CUMMINS IN-FRAME ENGINE OVERHAULS - COST PRICING FORM

Cummins

Year 1: August 1, 2026 - July 31, 2027

ITEM #	OH Type	DESCRIPTION	QTY	UNIT PRICE	EXT. PRICE
1	Basic Overhaul	Cummins ISL G 8.9L CNGs	24	$ 27,546.15	$ 661,107.60
2	Basic Overhaul + A	Cummins ISL G 8.9L CNG In-Frame + Crankshaft	2	$ 34,222.02	$ 68,444.04
3	Basic Overhaul + B	Cummins ISL G 8.9L CNG In-Frame + Camshaft	2	$ 29,530.04	$ 59,060.08
4	Cylinder Head	Cylinder head & Gasket replacement only	10	$ 9,253.75	$ 92,537.50
5	Liner Protrusion Cut With Shims	Liner Protrusion Cut With Shims	10	$ 1,016.60	$ 10,166.00
6	Basic Overhaul	Cummins ISL G 8.9L NZ	8	$ 31,628.18	$ 253,025.44
7	Basic Overhaul + A	Cummins ISL G 8.9L NZ In-Frame + Crankshaft	2	$ 38,304.05	$ 76,608.10
8	Basic Overhaul + B	Cummins ISL G 8.9L NZ In-Frame + Camshaft	2	$ 33,612.07	$ 67,224.14
9	Cylinder head	Cylinder head & Gasket replacement only	8	$ 9,253.75	$ 74,030.00
10	Liner Protrusion Cut With Shims	Liner Protrusion Cut With Shims	8	$ 1,016.60	$ 8,132.80
11	Basic Overhaul	CumminsL9N	20	$ 31,043.45	$ 620,869.00
12	Basic Overhaul + A	Cummins L9N In-Frame + Crankshaft	2	$ 37,719.32	$ 75,438.64
13	Basic Overhaul + B	Cummins L9N CNG In-Frame + Camshaft	2	$ 33,027.34	$ 66,054.68
14	Cylinder head	Cylinder head & Gasket replacement only	10	$ 9,253.75	$ 92,537.50
15	Liner Protrusion Cut With Shims	Liner Protrusion Cut With Shims	10	$ 1,016.60	$ 10,166.00
16	Basic Overhaul	Cummins ISX 12N	2	$ 39,545.10	$ 79,090.20
17	Basic Overhaul + A	Cummins ISX 12N In-Frame + Crankshaft	1	$ 50,203.97	$ 50,203.97
18	Basic Overhaul + B	Cummins ISX 12N In-Frame + Camshaft	1	$ 43,716.41	$ 43,716.41
19	Cylinder head	Cylinder head & Gasket replacement only	2	$ 12,336.72	$ 24,673.44
20	Liner Protrusion Cut With Shims	Liner Protrusion Cut With Shims	1	$ 1,230.00	$ 1,230.00
				Cummins Engine OH Total Amount for Year One	**$ 2,434,315.54**

Year 2: August 1, 2027 - July 31, 2028

ITEM #	OH Type	DESCRIPTION	QTY	UNIT PRICE	EXT. PRICE
1	Basic Overhaul	Cummins ISL G 8.9L CNGs	24	$ 28,372.53	$ 680,940.72
2	Basic Overhaul + A	Cummins ISL G 8.9L CNG In-Frame + Crankshaft	2	$ 35,248.68	$ 70,497.36
3	Basic Overhaul + B	Cummins ISL G 8.9L CNG In-Frame + Camshaft	2	$ 30,415.94	$ 60,831.88
4	Cylinder head	Cylinder head & Gasket replacement only	10	$ 9,531.36	$ 95,313.60
5	Liner Protrusion Cut With Shims	Liner Protrusion Cut With Shims	10	$ 1,047.10	$ 10,471.00
6	Basic Overhaul	Cummins ISL G 8.9L NZ	10	$ 32,577.03	$ 325,770.30
7	Basic Overhaul + A	Cummins ISL G 8.9L NZ In-Frame + Crankshaft	2	$ 39,453.17	$ 78,906.34
8	Basic Overhaul + B	Cummins ISL G 8.9L NZ In-Frame + Camshaft	2	$ 34,620.43	$ 69,240.86
9	Cylinder head	Cylinder head & Gasket replacement only	10	$ 9,531.36	$ 95,313.60
10	Liner Protrusion Cut With Shims	Liner Protrusion Cut With Shims	10	$ 1,047.10	$ 10,471.00
11	Basic Overhaul	CumminsL9N	20	$ 31,974.75	$ 639,495.00
12	Basic Overhaul + A	Cummins L9N In-Frame + Crankshaft	2	$ 38,850.90	$ 77,701.80
13	Basic Overhaul + B	Cummins L9N CNG In-Frame + Camshaft	2	$ 34,018.16	$ 68,036.32
14	Cylinder head	Cylinder head & Gasket replacement only	10	$ 9,531.36	$ 95,313.60
15	Liner Protrusion Cut With Shims	Liner Protrusion Cut With Shims	10	$ 1,047.10	$ 10,471.00
16	Basic Overhaul	Cummins ISX 12N	2	$ 40,731.45	$ 81,462.90
17	Basic Overhaul + A	Cummins ISX 12N In-Frame + Crankshaft	1	$ 51,710.09	$ 51,710.09
18	Basic Overhaul + B	Cummins ISX 12N In-Frame + Camshaft	1	$ 45,027.90	$ 45,027.90
19	Cylinder head	Cylinder head & Gasket replacement only	2	$ 12,706.82	$ 25,413.64
20	Liner Protrusion Cut With Shims	Liner Protrusion Cut With Shims	1	$ 1,266.90	$ 1,266.90
				Cummins Engine OH Total Amount for Year Two	**$ 2,593,655.81**

Year 3: August 1, 2028 - July 31, 2029

ITEM #	OH Type	DESCRIPTION	QTY	UNIT PRICE	EXT. PRICE
1	Basic Overhaul	Cummins ISL G 8.9L CNGs	22	$ 29,223.71	$ 642,921.62
2	Basic Overhaul + A	Cummins ISL G 8.9L CNG In-Frame + Crankshaft	2	$ 36,306.14	$ 72,612.28
3	Basic Overhaul + B	Cummins ISL G 8.9L CNG In-Frame + Camshaft	2	$ 31,328.42	$ 62,656.84
4	Cylinder head	Cylinder head & Gasket replacement only	10	$ 9,817.30	$ 98,173.00
5	Liner Protrusion Cut With Shims	Liner Protrusion Cut With Shims	10	$ 1,078.51	$ 10,785.10
6	Basic Overhaul	Cummins ISL G 8.9L NZ	10	$ 33,554.34	$ 335,543.40
7	Basic Overhaul + A	Cummins ISL G 8.9L NZ In-Frame + Crankshaft	2	$ 40,636.77	$ 81,273.54
8	Basic Overhaul + B	Cummins ISL G 8.9L NZ In-Frame + Camshaft	2	$ 35,659.04	$ 71,318.08
9	Cylinder head	Cylinder head & Gasket replacement only	10	$ 9,817.30	$ 98,173.00

10	Liner Protrusion Cut With Shims	Liner Protrusion Cut With Shims	10	$ 1,078.51	$ 10,785.10
11	Basic Overhaul	CumminsL9N	22	$ 32,933.99	$ 724,547.78
12	Basic Overhaul + A	Cummins L9N In-Frame + Crankshaft	2	$ 40,016.43	$ 80,032.86
13	Basic Overhaul + B	Cummins L9N CNG In-Frame + Camshaft	2	$ 35,038.70	$ 70,077.40
14	Cylinder head	Cylinder head & Gasket replacement only	10	$ 9,817.30	$ 98,173.00
15	Liner Protrusion Cut With Shims	Liner Protrusion Cut With Shims	10	$ 1,078.51	$ 10,785.10
16	Basic Overhaul	Cummins ISX 12N	4	$ 41,953.39	$ 167,813.56
17	Basic Overhaul + A	Cummins ISX 12N In-Frame + Crankshaft	1	$ 53,261.39	$ 53,261.39
18	Basic Overhaul + B	Cummins ISX 12N In-Frame + Camshaft	1	$ 46,378.74	$ 46,378.74
19	Cylinder head	Cylinder head & Gasket replacement only	2	$ 13,088.03	$ 26,176.06
20	Liner Protrusion Cut With Shims	Liner Protrusion Cut With Shims	1	$ 1,304.91	$ 1,304.91
			Cummins Engine OH Total Amount for Year Three		**$ 2,762,792.76**

Year 4: August 1, 2029 - July 31, 2030

ITEM #	OH Type	DESCRIPTION	QTY	UNIT PRICE	EXT. PRICE
1	Basic Overhaul	Cummins ISL G 8.9L CNGs	20	$ 30,100.42	$ 602,008.40
2	Basic Overhaul + A	Cummins ISL G 8.9L CNG In-Frame + Crankshaft	2	$ 37,395.32	$ 74,790.64
3	Basic Overhaul + B	Cummins ISL G 8.9L CNG In-Frame + Camshaft	2	$ 32,268.27	$ 64,536.54
4	Cylinder head	Cylinder head & Gasket replacement only	10	$ 10,111.82	$ 101,118.20
5	Liner Protrusion Cut With Shims	Liner Protrusion Cut With Shims	10	$ 1,110.87	$ 11,108.70
6	Basic Overhaul	Cummins ISL G 8.9L NZ	8	$ 34,560.97	$ 276,487.76
7	Basic Overhaul + A	Cummins ISL G 8.9L NZ In-Frame + Crankshaft	2	$ 47,855.87	$ 95,711.74
8	Basic Overhaul + B	Cummins ISL G 8.9L NZ In-Frame + Camshaft	2	$ 36,725.81	$ 73,451.62
9	Cylinder head	Cylinder head & Gasket replacement only	10	$ 10,111.82	$ 101,118.20
10	Liner Protrusion Cut With Shims	Liner Protrusion Cut With Shims	10	$ 1,110.87	$ 11,108.70
11	Basic Overhaul	CumminsL9N	20	$ 33,922.01	$ 678,440.20
12	Basic Overhaul + A	Cummins L9N In-Frame + Crankshaft	2	$ 41,216.92	$ 82,433.84
13	Basic Overhaul + B	Cummins L9N CNG In-Frame + Camshaft	2	$ 36,089.86	$ 72,179.72
14	Cylinder head	Cylinder head & Gasket replacement only	10	$ 10,111.82	$ 101,118.20
15	Liner Protrusion Cut With Shims	Liner Protrusion Cut With Shims	10	$ 1,110.87	$ 11,108.70
16	Basic Overhaul	Cummins ISX 12N	4	$ 43,211.99	$ 172,847.96
17	Basic Overhaul + A	Cummins ISX 12N In-Frame + Crankshaft	1	$ 54,859.23	$ 54,859.23
18	Basic Overhaul + B	Cummins ISX 12N In-Frame + Camshaft	1	$ 47,770.10	$ 47,770.10
19	Cylinder head	Cylinder head & Gasket replacement only	2	$ 13,480.67	$ 26,961.34
20	Liner Protrusion Cut With Shims	Liner Protrusion Cut With Shims	1	$ 1,344.06	$ 1,344.06
			Cummins Engine OH Total Amount for Year Four		**$ 2,660,503.85**

Year 5: August 1, 2030 - July 31, 2031

ITEM #	OH Type	DESCRIPTION	QTY	UNIT PRICE	EXT. PRICE
1	Basic Overhaul	Cummins ISL G 8.9L CNGs	20	$ 31,003.43	$ 620,068.60
2	Basic Overhaul + A	Cummins ISL G 8.9L CNG In-Frame + Crankshaft	2	$ 38,517.18	$ 77,034.36
3	Basic Overhaul + B	Cummins ISL G 8.9L CNG In-Frame + Camshaft	2	$ 33,236.32	$ 66,472.64
4	Cylinder head	Cylinder head & Gasket replacement only	10	$ 10,415.17	$ 104,151.70
5	Liner Protrusion	Cut Liner Protrusion with Shims	10	$ 1,144.20	$ 11,442.00
6	Basic Overhaul	Cummins ISL G 8.9L NZ	8	$ 35,597.80	$ 284,782.40
7	Basic Overhaul + A	Cummins ISL G 8.9L NZ In-Frame + Crankshaft	2	$ 49,291.55	$ 98,583.10
8	Basic Overhaul + B	Cummins ISL G 8.9L NZ In-Frame + Camshaft	2	$ 37,827.58	$ 75,655.16
9	Cylinder head	Cylinder head & Gasket replacement only	10	$ 10,415.17	$ 104,151.70
10	Liner Protrusion	Cut Liner Protrusion with Shims	10	$ 1,144.20	$ 11,442.00
11	Basic Overhaul	CumminsL9N	24	$ 34,939.67	$ 838,552.08
12	Basic Overhaul + A	Cummins L9N In-Frame + Crankshaft	2	$ 42,453.43	$ 84,906.86
13	Basic Overhaul + B	Cummins L9N CNG In-Frame + Camshaft	2	$ 37,172.56	$ 74,345.12
14	Cylinder head	Cylinder head & Gasket replacement only	10	$ 10,415.17	$ 104,151.70
15	Liner Protrusion	Cut Liner Protrusion with Shims	10	$ 1,144.20	$ 11,442.00
16	Basic Overhaul	Cummins ISX 12N	4	$ 44,508.35	$ 178,033.40
17	Basic Overhaul + A	Cummins ISX 12N In-Frame + Crankshaft	1	$ 56,505.01	$ 56,505.01
18	Basic Overhaul + B	Cummins ISX 12N In-Frame + Camshaft	1	$ 49,203.20	$ 49,203.20
19	Cylinder head	Cylinder head & Gasket replacement only	2	$ 13,885.09	$ 27,770.18
20	Liner Protrusion	Cut Liner Protrusion with Shims	1	$ 1,384.38	$ 1,384.38
			Cummins Engine OH Total Amount for Year Five		**$ 2,880,077.59**

GROUP II- CUMMINS ENGINE REBUILDS	
Year 1: August 1, 2026 - July 31, 2027	$ 2,434,315.54
Year 2: August 1, 2027 - July 31, 2028	$ 2,593,655.81
Year 3: August 1, 2028 - July 31, 2029	$ 2,762,792.76

Year 4: August 1, 2029 - July 31, 2030	$	2,660,503.85
Year 5: August 1, 2030- July 31, 2031	$	2,880,077.59
GRAND TOTALS - BASIS OF AWARD	**$**	**13,331,345.55**
CA Sales Tax 7.75%		**$1,033,179.28**
GRAND TOTAL	**$**	**14,364,524.83**

Metropolitan Transit System

Agenda Item No. 13

MEETING OF THE SAN DIEGO METROPOLITAN TRANSIT SYSTEM
BOARD OF DIRECTORS

July 30, 2026

SUBJECT:

Pyramid Building Structural Repairs – Contract Award

RECOMMENDATION:

That the San Diego Metropolitan Transit System (MTS) Board of Directors authorize the Chief Executive Officer (CEO) to execute MTS Doc. No. PWG470.0-26 (in substantially the same format as Attachment A), with ABC General Contractor, Inc. (ABCGC), in the amount of $898,497.52 for the complete structural upgrade and repair of the Pyramid Building.

Budget Impact

The total cost of this contract is estimated to be $898,497.52. The project will be funded by Capital Improvement Program (CIP) 2006109401 – Pyramid Building Structural Improvements.

DISCUSSION:

The Pyramid Building is currently used as a storage warehouse by multiple departments within MTS. A structural evaluation was carried out in 2019, which identified areas in need of repair to return the structure to a state of good repair. These recommendations then underwent review and full design by HDR, Inc.

The construction work will include repair or complete replacement of structural columns, repair and replacement of exterior doors and masonry, and structural improvements to the building's roof and roof framing. These repairs will ensure a return to a state of good repair and ensure the safety of the personnel utilizing this building, as well as all inventory stored within the building (Attachment B).

Today's proposed action would issue a contract to provide all the labor, materials, and equipment necessary to carry out all repairs and improvements outlined in the prepared and provided plan set issued for construction and dated June 1, 2026.

On May 15, 2026, MTS issued an Invitation for Bids (IFB) seeking a contractor to provide structural repair and improvement work for the Pyramid Building based on structural inspections and the plan set prepared and provided by HDR.

Six (6) bids were received by the due date of June 24, 2026, from the following firms:

Company Name	Firm Certifications	Bid Amount
MTS – Independent Cost Estimate (ICE)		***$1,113,681.00***
ABC General Contractor	N/A	$898,472.79
M J Builder	N/A	$1,049,400.00
All Source Company Building Group	Small Business Public Works (SB-PW)	$1,565,532.00
GQ Builders, Inc.	N/A	$1,940,101.00
Metro Builders & Engineers Group, Ltd.	N/A	$2,163,332.00
Sitka Construction Group*	N/A	$2,425,368,269.00

**MTS believes the vendor submitted a bid with errors resulting in an unrealistic proposed amount for the construction services.*

Based on the bids received, and in comparison, to MTS's ICE at $1,113,681.00, staff determined ABCGC to be the lowest responsive and responsible bidder, and the bid to be fair and reasonable (Attachment C).

This work order is subject to the Project Labor Agreement (PLA) approved under Board Policy No. 66 because the MTS ICE was over $1,000,000.00.

Work is expected to be completed within one hundred and twenty (120) calendar days after the issuance of the notice to proceed.

ABCGC will be utilizing the following subcontractors to perform a portion of the work, as detailed further in Attachment D:

Subcontractor Name	Subcontractor Certifications
BTS Equipment Unlimited Inc.	SB, SB-PW
Premier Roofing of CA Inc.	Disabled Veteran Business Enterprise (DVBE), SB-PW, and SB (Micro)
Electric Contracting & Design Solutions Inc dba Swift Electric	N/A
Titan Steel	N/A

Therefore, staff recommends that the MTS Board of Directors authorize the CEO to execute MTS Doc. No. PWG470.0-26 (in substantially the same format as Attachment A), with ABCGC, in the amount of $898,497.52 for the complete structural upgrade and repair of the Pyramid Building.

/s/ Sharon Cooney
Sharon Cooney
Chief Executive Officer

Key Staff Contact: Julia Tuer, 619.557.4515, Julia.Tuer@sdmts.com

Attachments: A. Draft Agreement MTS Doc No.PWG470.0-26
B. Scope of Work, Technical Specifications and Plans
C. Costs
D. Subcontractor List

Metropolitan Transit System

STANDARD CONSTRUCTION AGREEMENT

FOR

MTS DOC. NO. PWG470.0-26

PYRAMID BUILDING STRUCTURAL REPAIRS

THIS AGREEMENT is entered into this _____ day of _____ 2026, in the State of California by and between San Diego Metropolitan Transit System ("MTS"), a California public agency, and the following, hereinafter referred to as "Contractor":

Name: ABC General Contractor Inc. Address: 1941 Friendship Drive, Ste F
El Cajon, CA 92020

Form of Business: Corporation
(Corporation, Partnership, Sole Proprietor, etc.)

Email: Travis@abcgeneralinc.com

Telephone: (619) 937-1010

Authorized person to sign contracts Travis Brozowski (Name) CEO (Title)

The specified Contract Documents are part of this Agreement. The Contractor agrees to furnish to MTS services and materials, as follows:
Contractor shall furnish all necessary management, supervision, labor, materials, tools, supplies, equipment, plant, services, engineering, testing and/or any other act or thing required to diligently and fully perform and complete the Project as specified in accordance with the Standard Agreement and General Conditions (Exhibit A), Scope of Work, Special Conditions and Attachments (Exhibit B), Bid Price Form (Exhibit C) and Forms (Exhibit D).

SCOPE OF WORK.
Contractor, for and in consideration of the payment to be made to Contractor as hereinafter provided, shall furnish all plant, labor, technical and professional services, supervision, materials and equipment, other than such materials and equipment as may be specified to be furnished by MTS, and perform all operations necessary to complete the Work in strict conformance with the Contract Documents (defined below) for the following public work of improvement:

PYRAMID BUILDING STRUCTURAL REPAIRS

Contractor is an independent contractor and not an agent of MTS. The Contractor and its surety shall be liable to MTS for any damages arising as a result of the Contractor's failure to comply with this obligation.

CONTRACT TIME.
Time is of the essence in the performance of the Work. The Work shall be commenced by the date stated in MTS's Notice to Proceed. The Contractor shall complete all Work required by the Contract Documents

within **120 calendar days** from the commencement date stated in the Notice to Proceed. By its signature hereunder, Contractor agrees the Contract Time is adequate and reasonable to complete the Work.

CONTRACT PRICE.
MTS shall pay the Contractor as full compensation for the performance of the Contract, subject to any additions or deductions as provided in the Contract Documents, and including all applicable taxes and costs, the sum of **$898,497.52**. Payment shall be made as set forth in the General Conditions.

PROVISIONS REQUIRED BY LAW.
Each and every provision of law required to be included in these Contract Documents shall be deemed to be included in these Contract Documents. The Contractor shall comply with all requirements of the California Labor Code applicable to this Project.

INDEMNIFICATION.
Contractor shall provide indemnification as set forth in the General Conditions.

PREVAILING WAGES.
Contractor shall be required to pay the prevailing rate of wages in accordance with the Labor Code which such rates shall be made available at MTS's Administrative Office or may be obtained online at http://www.dir.ca.gov and which must be posted at the job site.

PROJECT LABOR AGREEMENT.
Contractor shall comply with MTS's Project Labor Agreement in the performance of the Work.

SAN DIEGO METROPOLITAN TRANSIT SYSTEM	ABC GENERAL CONTRACTOR INC.
By: _____ Sharon Cooney, Chief Executive Officer Approved as to form: By: _____ Karen Landers, General Counsel	By _____ Title: _____

DRAFT

SCOPE OF WORK/MINIMUM TECHNICAL SPECIFICATIONS

ATTACHMENT 1

**** License B**

SECTION 1 GENERAL

The Pyramid Building is in need of structural repairs in order to be returned to a state of good repair. Multiple structural analyses of the building have taken place, and a design has been generated to adequately address all the structural deficiencies detected in the structure.

All work is to occur at the MTS Pyramid Building located at 1699 Main St, San Diego, CA 92113.

SECTION 2 STAGING

Contractor is to keep and store all materials within a predesignated laydown area. Size and location of the laydown area is to be coordinated with the MTS Project Manager. All property stored onsite is the responsibility of the contractor and MTS shall not be held liable for any and all equipment, material, tools, etc. All deliveries to the site shall be coordinated through the MTS Project Manager. Only vehicles necessary for that day's controlling activities may be parked onsite adjacent to the work area. Remaining vehicles are to be park on adjacent streets and public parking areas.

SECTION 3 TEMP FACILITIES

The contractor may use MTS restrooms and hand washing facilities for their employees, subcontractors, and suppliers throughout the duration of the project. Contractor may also use MTS power and water in relation to the construction, however water may not be available at all locations of work and contractor may have to supply their own.

SECTION 4 SAFETY

Diligent caution must be taken during the undertaking of this work. Any open excavations or areas of newly placed concrete left overnight must be appropriately marked off with a suitable combination of delineators, warning lights, caution tape, and/or A-frames and/or temp fencing. At the end of each day the entirety of the area being worked on must be surrounded by at minimum, reflective delineators placed 6' on-center with caution tape strung between them clearly designating the area of work in order to prevent any MTS personnel from entering the area of work. Contractor must be aware of their surroundings at all times.

Any work that may impact the trolley lines adjacent to the building or trolley yard must be coordinated with the MTS project manager and MTS rail departments. Contractor will be responsible for submitting any necessary flagging requests and is responsible for ensuring that all employees within MTS rail right of way are properly trained.

SECTION 5 WASTE

The contractor is responsible for legally disposing of any and all waste in relation to the work. The contractor shall not use any MTS receptacles to dispose of material generated during the performance of this contract. Contractor is responsible for general cleanup at the end of each work day and the Contractor is to perform a final clean to meet the current condition and cleanliness of the on-site paving.

The Contractor is responsible for any and all costs associated with the removal, hauling, and disposing of the exported waste.

SECTION 6 SUBMITTALS

The contractor shall provide submittals showing product data, details, and necessary information for all items described in the project specifications.

SECTION 7 DRAWINGS

There are no known As-builts for the area where the work is to occur. The contractor shall verify all existing site conditions and familiarize themselves with the Contract Documents and existing site conditions.

SECTION 8 SCHEDULE AND SEQUENCING

All base bid work shall be completed within one hundred twenty (120) calendar days from issuance of the Notice to Proceed.

SECTION 9 PYRAMID STRUCTURAL REPAIRS

Contractor is to carry out all work as shown in the construction bid documents including the plans and specifications generated by HDR and dated April 2026.

PLANS AND SPECIFICATIONS

METROPOLITAN TRANSIT SYSTEM
PYRAMID BUILDING STRUCTURAL IMPROVEMENTS

INDEX OF DRAWINGS

SHT NO	DWG NO	DESCRIPTION
GENERAL		
1	G-000	TITLE SHEET, LOCATION MAP AND INDEX OF DRAWINGS
2	G-001	GENERAL NOTES - SHEET 1 OF 2
3	G-002	GENERAL NOTES - SHEET 2 OF 2
4	G-003	LEGEND, ABBREVIATIONS, AND SYMBOLS
5	G-010	CODE ANALYSIS
6	G-011	FIRE LIFE SAFETY PLAN
7	G-020	ACCESSIBILITY DIAGRAMS - CBC 2025 - SHEET 1 OF 3
8	G-021	ACCESSIBILITY DIAGRAMS - CBC 2025 - SHEET 2 OF 3
9	G-022	ACCESSIBILITY DIAGRAMS - CBC 2025 - SHEET 3 OF 3
DEMOLITION		
10	D-100	OVERALL DEMO PLAN
ARCHITECTURAL		
11	AS-100	ARCHITECTURE - OVERALL FLOOR PLAN
12	A-101	ARCHITECTURE - ENLARGED RAMP
13	A-501	ARCHITECTURE DETAILS
ELECTRICAL		
14	E-001	ELECTRICAL - PARTIAL FLOOR PLAN
STRUCTURES		
15	S-001	STRUCTURAL - GENERAL NOTES
16	S-002	STRUCTURAL - SPECIAL INSPECTIONS
17	S-100	STRUCTURAL - FOUNDATION PLAN
18	S-101	STRUCTURAL - ROOF FRAMING PLAN - RETROFIT AREA
19	S-102	STRUCTURAL - ROOF FRAMING PLAN
20	S-102A	STRUCTURAL - ENLARGED PLAN - SHEET 1 OF 4
21	S-102B	STRUCTURAL - ENLARGED PLAN - SHEET 2 OF 4
22	S-102C	STRUCTURAL - ENLARGED PLAN - SHEET 3 OF 4
23	S-102D	STRUCTURAL - ENLARGED PLAN - SHEET 4 OF 4
24	S-103	FIRE SPRINKLER PLAN
25	S-201	STRUCTURAL WALL ELEVATIONS
26	S-501	STRUCTURAL DETAILS - SHEET 1 OF 2
27	S-502	STRUCTURAL DETAILS - SHEET 2 OF 2
28	S-503	CMU WALL REPAIRS - IMAGES
29	S-504	CMU WALL REPAIRS - DETAILS

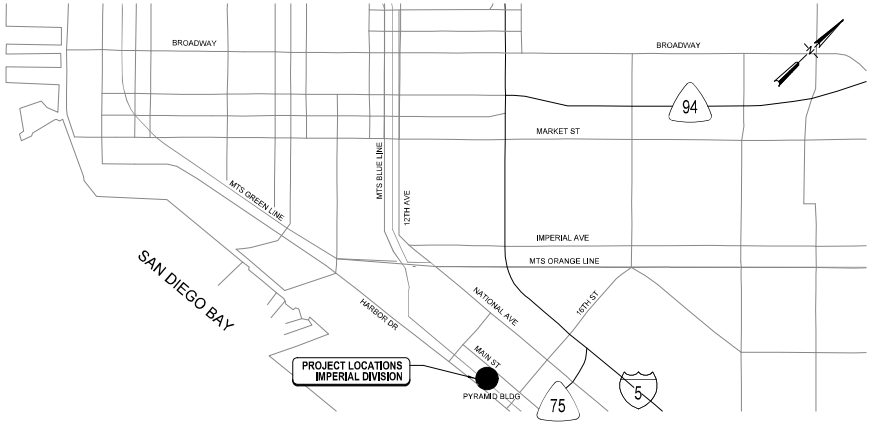

THIS PROJECT INVOLVES SEISMIC AND STRUCTURAL REPAIRS TO ADDRESS NECESSARY UPGRADES FOR STRUCTURAL INTEGRITY AND FIRE/LIFE SAFETY COMPLIANCE FOR THIS MTS PYRAMID BUILDING

PROJECT ADDRESS:

1699 MAIN ST, SAN DIEGO, CA 92113

OCCUPANCY:

1-STORY, NON-RATED SEPARATED OCCUPANCIES (GROUP 'S-2')

CONSTRUCTION TYPE:

TYPE V-B, FULLY SPRINKLERED
FIRE ALARM THROUGHOUT
EMERGENCY LIGHTS THROUGHOUT

CODES AND STANDARDS:

PROJECT HAS BEEN DESIGNED UNDER THE REQUIREMENTS OF THE APPLICABLE CODES BELOW

CODE ADMIN:	2022 CALIFORNIA ADMINISTRATIVE CODE (CAC) CALIFORNIA CODE OF REGULATIONS, TITLE 24, PART 1
BUILDING:	2022 CALIFORNIA BUILDING CODE (CBC) CALIFORNIA CODE OF REGULATIONS, TITLE 24, PART 2
FIRE:	2022 CALIFORNIA FIRE CODE (CFC) CALIFORNIA CODE OF REGULATIONS, TITLE 24, PART 9
ACCESSIBILITY:	2022 CALIFORNIA BUILDING CODE (CBC), TITLE 24, CHAPTER 11B
WORKER SAFETY:	CAL/OSHA, CALIFORNIA CODE OF REGULATIONS, TITLE 8
LIFE SAFETY:	NATIONAL FIRE PROTECTION ASSOCIATION: LIFE SAFETY CODE (NFPA 101)

IMPORTANT NOTICE

SECTION 4216/4217 OF THE GOVERNMENT CODE REQUIRES A DIG ALERT IDENTIFICATION NUMBER BE ISSUED BEFORE A "PERMIT TO EXCAVATE" WILL BE VALID. FOR YOUR DIG ALERT I.D. NUMBER CALL UNDERGROUND SERVICE ALERT TOLL FREE 1-800-422-4133 TWO WORKING DAYS BEFORE YOU DIG.

ARCHITECTURAL

HDR ENGINEERING, INC.

591 CAMINO DE LA REINA, SUITE 300
SAN DIEGO, CA 92108
ARCHITECTURE LEAD: VALERIE DELOACH, RA
PROJECT ARCHITECT: OWEN STARKEY, RA

STRUCTURAL

HDR ENGINEERING, INC.

350 S. GRAND AVE, SUITE 2900
LOS ANGELES, CA 90071-3406
WORK ORDER MANAGER: MARK HARPER, PE, SE
STRUCTURAL ENGINEER: PRITHVIRAJ DESAI, PE

FIRE/LIFE SAFETY

HDR ENGINEERING, INC.

1110 UNION ST, SUITE 220
SAN DIEGO, CA 92101
FIRE/LIFE SAFETY LEAD: DAVID BAGLEY, TSSP

NO.	DATE	REVISIONS	BY	CHK	APRV

LICENSED ARCHITECT OWEN STARKEY C-41803 REN. 04/30/27 STATE OF CALIFORNIA

DESIGNED BY J.K. ANDRES	DATE 04/26
DRAWN BY J.K. ANDRES	04/26
CHECKED BY M. HARPER	04/26
APPROVED BY N. CAPPADOCIA	04/26

Metropolitan Transit System

PYRAMID BUILDING
STRUCTURAL IMPROVEMENTS

TITLE SHEET, LOCATION MAP AND INDEX OF DRAWINGS

SCALE	NO SCALE
CONTRACT NO.	WOA352-AE-27
DRAWING NO.	G-000
SHEET NO.	1 OF 29

FOR REDUCED PLANS ORIGINAL SCALE IS IN INCHES 0 1 2 3

GENERAL NOTES:

1. THE CONSTRUCTION OF THIS PROJECT SHALL CONFORM TO THE APPLICABLE CODES ON G-000.
2. ALL CONSTRUCTION TECHNIQUES, WORK, MATERIALS AND FINISHES SHALL BE IN FULL COMPLIANCE WITH THE REQUIREMENTS OF THE ABOVE CODES AND ALL APPLICABLE LOCAL ORDINANCES. WHERE CONTRACT DOCUMENTS EXCEED SUCH REQUIREMENTS WITHOUT VIOLATING CODES, REGULATIONS, AND/OR ORDINANCES THE CONTRACT DOCUMENTS TAKE PRECEDENCE, WHERE CODES CONFLICT, THE MORE STRINGENT SHALL APPLY.
3. DURING THE ENTIRE CONSTRUCTION PERIOD, IT SHALL BE THE SOLE RESPONSIBILITY OF THE CONTRACTOR TO MAINTAIN CONDITIONS AT THE PROJECT SITE TO MEET THE REQUIREMENTS OF THE FEDERAL OCCUPATIONAL SAFETY AND HEALTH ADMINISTRATION (OSHA), CONTRACT GENERAL CONDITIONS AND GENERAL REQUIREMENTS, AND CALIFORNIA OCCUPATIONAL REGULATIONS. THIS PROVISION SHALL COVER THE CONTRACTOR'S EMPLOYEES AND ALL OTHER PERSONS WORKING UPON OR VISITING THE SITE. THE CONTRACTOR SHALL BECOME FULLY INFORMED OF ALL APPLICABLE STANDARDS AND REGULATIONS AND INFORM ALL PERSONS AND REPRESENTATIVES RESPONSIBLE FOR WORK UNDER THIS CONTRACT.
4. PRIOR TO THE COMMENCEMENT OF WORK, VISIT THE JOB SITE AND CONFIRM ALL NEW AND EXISTING DIMENSIONS AND CONDITIONS, ARE IN COMPLIANCE WITH THE CONTRACT DOCUMENTS, ALL INFORMATION ON THE DRAWINGS RELATIVE TO EXISTING CONDITIONS IS GIVEN AS THE BEST PRESENT KNOWLEDGE BUT WITHOUT GUARANTEE OF ACCURACY. WHERE ACTUAL CONDITIONS CONFLICT WITH THE DRAWINGS, THE CONTRACTOR SHALL NOTIFY THE ARCHITECT IMMEDIATELY IN WRITING OF ALL DISCREPANCIES OR CONFLICTS. DO NOT PROCEED WITH WORK IN THE AREA OF DISCREPANCY OR CONFLICT UNTIL DIRECTION IS GIVEN BY THE ARCHITECT. IF THE CONTRACTOR PROCEEDS WITHOUT DIRECTION FROM ARCHITECT, IT SHALL BE AT THE CONTRACTOR'S RISK AND THE CONTRACTOR SHALL BE RESPONSIBLE FOR ALL REQUIRED CORRECTIVE ACTIONS.
5. REVIEW THE ARCHITECTURAL DRAWINGS BEFORE THE INSTALLATION OF SYSTEMS SHOWN ON ENGINEERING DOCUMENTS, DISCREPANCIES BETWEEN THE ARCHITECTURAL AND ENGINEERING DOCUMENTS SHALL BE BROUGHT TO THE ARCHITECT'S ATTENTION FOR DIRECTION. CONSTRUCTION INSTALLED IN CONFLICT WITH THE ARCHITECTURAL DRAWINGS SHALL BE CORRECTED BY CONTRACTOR AT NO EXPENSE TO THE OWNER.
6. DO NOT SCALE THE CONSTRUCTION DOCUMENTS, WRITTEN DIMENSIONS TAKE PRECEDENCE OVER SCALED GRAPHICS, NOTIFY THE ARCHITECT IMMEDIATELY IN WRITING OF ALL ADDITIONAL REQUIRED DIMENSIONS. DO NOT PROCEED WITH WORK IN THE AREA OF DISCREPANCY OR CONFLICT UNTIL DIRECTION IS GIVEN BY THE ARCHITECT. IF THE CONTRACTOR PROCEEDS WITHOUT DIRECTION FROM ARCHITECT, IT SHALL BE AT THE CONTRACTORS RISK, AND CONTRACTOR SHALL BE RESPONSIBLE FOR ALL REQUIRED CORRECTIVE ACTION.
7. MODIFICATIONS TO CONSTRUCTION DETAILS SHALL NOT BE MADE WITHOUT WRITTEN APPROVAL. NOTIFY THE ARCHITECT IMMEDIATELY IN WRITING OF ALL NECESSARY DETAIL CHANGES. DO NOT PROCEED WITH WORK IN THE AREA OF DISCREPANCY OR CONFLICT UNTIL DIRECTION IS GIVEN BY THE ARCHITECT. IF THE CONTRACTOR PROCEEDS WITHOUT DIRECTION FROM ARCHITECT, IT SHALL BE AT THE CONTRACTORS RISK, AND CONTRACTOR SHALL BE RESPONSIBLE FOR ALL REQUIRED CORRECTIVE ACTION.
8. CORRECT ALL WORK INSTALLED IN CONFLICT WITH THE CONSTRUCTION DOCUMENTS BY CONTRACTOR AS DIRECTED BY ARCHITECT AND AT NO ADDITIONAL EXPENSE TO THE OWNER.
9. ALL DAMAGE CAUSED BY NEW WORK TO THE EXISTING AREAS OF THE SITE, CONSTRUCTION, ELECTRICAL OR MECHANICAL SYSTEMS SHALL BE PATCHED AND REPAIRED TO MATCH EXISTING CONDITIONS OR AS FOUND PRIOR TO ANY DAMAGE.
10. THE CONTRACTOR SHALL BE RESPONSIBLE FOR THE PROTECTION OF ALL EXPOSED EXISTING STRUCTURES AT THE WORK AREA FROM WEATHER AND OTHER INCLEMENT CONDITIONS, ANY DAMAGE INCURRED DUE TO THE FAILURE BY THE CONTRACTOR TO PROPERLY PROTECT SUCH WORK, SHALL BE REPAIRED AT THE CONTRACTOR'S EXPENSE.
11. WHERE WORK OR EQUIPMENT IS INDICATED "N.I.C." (NOT IN CONTRACT) ON THE DRAWINGS SUCH WORK AND/OR EQUIPMENT SHALL BE PROVIDED BY OTHERS. CONTRACTOR SHALL COORDINATE AND COOPERATE TO FACILITATE SUCH INSTALLATION.
12. PLAN DIMENSIONS ARE TO FACE OF STUD OR CENTER LINE OF STRUCTURAL ELEMENT UNLESS NOTED OTHERWISE.
13. PLAN DIMENSIONS SHOWN WITH "CLEAR" OR "CLR," ARE TO FACE OF FINISH UNLESS NOTED OTHERWISE.
14. CEILING DIMENSIONS SHOWN ARE TO FACE OF FINISHES AND CENTER LINE OF CEILING GRID.
15. DIMENSIONS ARE NOT ADJUSTABLE WITHOUT THE REVIEW OF THE ARCHITECT UNLESS NOTED (+/-) OR "VERIFY". DIMENSIONS NOTED "HOLD" SHALL BE CONSIDERED AS ABSOLUTE AND USED FOR LAYOUT CONTROL UNLESS OTHERWISE DIRECTED BY THE ARCHITECT.
16. HEIGHTS ARE DIMENSIONED FROM TOP OF SLAB UNLESS NOTED OTHERWISE OR NOTED AFF (ABOVE FINISHED FLOOR).
17. "PROVIDE" SHALL BE UNDERSTOOD TO MEAN "PROVIDE COMPLETE IN PLACE" THAT IS, FURNISH AND INSTALL, AND MEANS TO FURNISH, FABRICATE, DELIVER, HOIST, INSTALL AND ERECT, INCLUDING ALL LABOR, MATERIALS, EQUIPMENT, APPARATUS, APPURTENANCES AND EXPENSES NECESSARY TO COMPLETE IN PLACE, READY FOR OPERATION OR USE.
18. "TYPICAL" MEANS COMPARABLE CHARACTERISTICS FOR THE ELEVATION OR DETAIL NOTED, WHEN A DETAIL OR NOTE IS IDENTIFIED AS "TYPICAL", CONTRACTOR SHALL APPLY THIS DETAIL OR NOTE TO EVERY LIKE CONDITION, WHETHER OR NOT THE REFERENCE IS REPAIRED IN EVERY INSTANCE. VERIFY DIMENSIONS AND ORIENTATION ON PLANS.
19. PROVIDE WORK NOT SPECIFICALLY DETAILED OR SPECIFIED IN ACCORDANCE WITH DETAILS OR SIZES COVERING SIMILAR WORK.
20. "SIMILAR" MEANS COMPARABLE CHARACTERISTICS FOR THE ELEVATION OR DETAILS NOTED VERIFY DIMENSIONS AND ORIENTATION ON PLANS.
21. ABBREVIATIONS THROUGHOUT THE DOCUMENTS COMPLY WITH DOCUMENTS ABBREVIATIONS LIST OR ARE THOSE IN COMMON USE. ARCHITECT WILL DEFINE THE INTENT OF ANY IN QUESTION.
22. REFER TO CONTRACT FOR GENERAL REQUIREMENTS AND GENERAL CONDITIONS.
23. PROVIDE BARRICADES AND PROTECTIVE DEVICES SEPARATING CONSTRUCTION AREAS. PROVIDE TEMPORARY PASSAGES AS REQUIRED. PRIOR TO DELIVERY OF MATERIALS TO CONSTRUCTION ZONE AND REMOVAL OF WASTE FROM THE SITE, CHECK WITH OWNER/ARCHITECT/INSPECTOR OF RECORD FOR ACCEPTABLE ACCESS ROUTE AND TIME. UNDER NO CIRCUMSTANCES USE AREA OUTSIDE THE CONSTRUCTION ZONE WITHOUT PRIOR CLEARANCE FROM THE OWNER/ARCHITECT/INSPECTOR OF RECORD. COMPLY WITH REQUIREMENTS AS SPECIFIED IN PROJECT MANUAL.
24. PROVIDE FOR THE PROPER SEQUENCE OF CONSTRUCTION. LOCATION AND SIZE OF OPENINGS COORDINATE ALL CONSTRUCTION AS INDICATED BY THE CONTRACT DOCUMENTS, INCLUDING SHOP DRAWINGS REVIEWED BY ARCHITECT.
25. DISPOSE OF ALL REMOVED AND/OR DEMOLISHED MATERIAL, WASTE, DEBRIS AND TRASH, CAUSED BY BOTH DEMOLISHED AND NEW WORK, DAILY. THIS MATERIAL SHALL BE REMOVED FROM THE PROJECT SITE AND TAKEN TO A LEGALLY-OPERATED DISPOSAL SITE. DISPOSAL OF THESE MATERIAL MUST COMPLY WITH REQUIREMENTS AS SPECIFIED IN PROJECT MANUAL. DO NOT STORE ANY OF THE ABOVE MATERIALS IN CORRIDORS AT ANY TIME.
26. INSTALLATION OF ALL SPECIFIED EQUIPMENT SHALL BE TO THE MANUFACTURER'S PUBLISHED SPECIFICATIONS AND/OR TRADE STANDARDS IN ADDITION TO MEETING OR EXCEEDING THE DESIGN STANDARDS. FOR ALL EQUIPMENT SPECIFIED VERIFY POINTS OF CONNECTION, INCLUDING SIZES AND LOCATIONS, AND ALL OTHER REQUIRED OPERATING CRITERIA WITH EQUIPMENT MANUFACTURER.
27. COORDINATE THE LOCATION AND TYPE OF ALL ACCESS PANELS REQUIRED FOR ACCESSING MECHANICAL, PLUMBING, ELECTRICAL AND OTHER BUILDING SYSTEMS WITH ARCHITECT, THE CONTRACTOR SHALL BE RESPONSIBLE FOR BEING FAMILIAR AND COMPLYING WITH THE MANUFACTURER'S INSTRUCTIONS FOR CORRECT INSTALLATION AND USE OF ALL MATERIALS.
28. CONTRACTOR SHALL STIPULATE THAT ALL PROPOSED SUBSTITUTIONS ARE EQUAL IN PERFORMANCE AND COMPLY WITH APPLICABLE CODES AND REGULATIONS. CONTRACTOR'S SUBSTITUTION OF ALTERNATE MATERIALS OR SYSTEMS SHALL BE AT NO ADDITIONAL COST TO OWNER. SUBSTITUTIONS SHALL BE CONSIDERED AS A CHANGE ORDER AND BE APPROVED BY THE AUTHORITIES HAVING JURISDICTION (AHJ) PRIOR TO FABRICATION OR USE.
29. CHANGES TO THE APPROVED DRAWINGS AND SPECIFICATIONS SHALL BE MADE AS INDICATED IN SECTION 3.34 OF THE GENERAL CONDITIONS.
30. DRAWINGS & SPECIFICATIONS ARE COMPLEMENTARY. COMPONENTS OF THE CONTRACT DOCUMENTS. REVIEW ALL DRAWINGS AND SPECIFICATIONS FOR THE COMPLETE SCOPE OF WORK. NOTIFY ARCHITECT IMMEDIATELY FOR CLARIFICATION IF INCONSISTENCIES, CONTRADICTIONS OR OMISSIONS ARE DISCOVERED.
31. VERIFY ALL DIMENSIONS, LOCATIONS OF EXISTING UTILITIES, AND CONDITIONS ON THE JOB SITE PRIOR TO THE START OF WORK OR PORTIONS OF THE WORK. NOTIFY THE ARCHITECT IMMEDIATELY OF ANY DISCREPANCIES BETWEEN THE ACTUAL FIELD CONDITIONS AND THE CONSTRUCTION DOCUMENTS. EXISTING CONDITIONS ARE INDICATED AS A RESULT OF FIELD OBSERVATIONS. INFORMATION SHOWN ON AVAILABLE DOCUMENTS AND FIELD CONDITIONS AT THE TIME OF PREPARATION.
32. ALL MATERIALS AND WORKMANSHIP SHALL COMPLY WITH ALL GOVERNING CODES, ORDINANCES, REGULATIONS AND LAWS.
33. WHERE NEW CONSTRUCTION ABUTS EXISTING FINISHED SURFACES, CONTRACTOR SHALL ALIGN NEW CONSTRUCTION SO THAT NEW FINISHES ARE FLUSH WITH EXISTING. VERIFY TEXTURES AND COLORS WITH ARCHITECT IF NOT INDICATED IN CONTRACT DOCUMENTS.
34. PRIOR TO THE START OF WORK THE CONTRACTOR SHALL COORDINATE BETWEEN THE REQUIREMENTS OF ALL DISCIPLINES HEREIN AND BETWEEN THE REQUIREMENTS OF ALL DRAWINGS AND SPECIFICATIONS IN ORDER THAT ALL ITEMS SATISFACTORILY RELATE TO ONE ANOTHER. NOTIFY ARCHITECT IMMEDIATELY REGARDING ANY ITEMS THAT CANNOT BE COORDINATED.
35. CONTRACTOR SHALL EXERCISE EXTREME CAUTION IN EXCAVATING AND TRENCHING ON THIS SITE TO AVOID EXISTING DUCTS, PIPING, CONDUIT, ETC, AND TO PREVENT HAZARD TO PERSONNEL AND/OR TO EXISTING UNDERGROUND UTILITIES OR STRUCTURES, THE CONTRACTOR SHALL IMMEDIATELY NOTIFY THE ARCHITECT SHOULD SUCH UNIDENTIFIED CONDITIONS BE DISCOVERED. THESE DRAWINGS AND SPECIFICATIONS DO NOT INCLUDE THE NECESSARY COMPONENTS FOR CONSTRUCTION SAFETY.
36. CUTTING, BORING, SAWCUTTING OR DRILLING THROUGH THE EXISTING OR NEW STRUCTURAL ELEMENTS IS NOT TO BE STARTED UNTIL THE DETAILS HAVE BEEN REVIEWED AND APPROVED BY THE ARCHITECT, STRUCTURAL ENGINEER AND AHJ IF DETAILS ARE NOT SHOWN OR DO NOT CONFORM TO THE APPROVED DRAWINGS.
37. PROVIDE EMERGENCY RESPONDER SAFETY FEATURES TO MEET CBC 914.
38. SAFETY: CONTRACTOR SHALL COMPLY WITH CALIFORNIA BUILDING CODE CHAPTER 33 SAFEGUARDS DURING CONSTRUCTION AND OSHA SAFETY STANDARDS.
39. BUILDING INSPECTION STAFF TO VERIFY SEWER CAPPING PRIOR TO COVERING.
40. PRIOR TO PERFORMING ANY WORK IN THE CITY RIGHT-OF-WAY AN ENCROACHMENT PERMIT MUST BE OBTAINED FROM THE PUBLIC WORKS DEPARTMENT.
41. DOORS SHALL SWING TO THE FULLY OPEN POSITION WHEN AN OPENING FORCE NOT TO EXCEED 5 POUNDS (INTERIOR AND EXTERIOR DOORS) AND 15 POUNDS (FIRE DOORS) IS APPLIED TO THE LATCH SIDE.
42. FINAL LIFE SAFETY INSPECTION REQUIRED BEFORE ANY HUMAN OCCUPANCY OF COMPLETED BUILDING.
43. JOINTS, PENETRATIONS AND OTHER OPENINGS IN THE BUILDING ENVELOPE THAT ARE POTENTIAL SOURCES OF AIR LEAKAGE SHALL BE CAULKED, GASKETED, WEATHER STRIPPED, OR OTHERWISE SEALED TO LIMIT INFILTRATION AND EXFILTRATION.
44. ALL INSULATING MATERIAL SHALL BE INSTALLED IN COMPLIANCE WITH THE FLAME-SPREAD RATING AND SMOKE DENSITY REQUIREMENTS OF THE CBC.
45. CONTRACTOR SHALL CONFIRM EXISTING CONDITIONS AND NOTIFY ENGINEER OF ANY AND ALL DISCREPANCIES, EXISTING CONDITIONS ABOVE THE UNDERSIDE OF DECK HAVE NOT BEEN VERIFIED BY OWNER OR ENGINEER. INTENT IS TO MATCH EXISTING ROOF AND ROOFING MATERIALS. THE CONTRACTOR SHALL PREPARE AND SUBMIT A WORKPLAN FOR REMOVAL, INSTALLATION AND WORKER SAFETY PRIOR TO WORK BEING DONE ON REQUIRED PORTIONS OF ROOF AS STATED IN THE DRAWINGS.

NO.	DATE	REVISIONS	BY	CHK	APRV

HDR

LICENSED ARCHITECT — OWEN STARKEY — C-41803 — REN. 04/30/27 — STATE OF CALIFORNIA

DESIGNED BY	J.K. ANDRES	DATE 04/26
DRAWN BY	J.K. ANDRES	04/26
CHECKED BY	M. HARPER	04/26
APPROVED BY	N. CAPPADOCIA	04/26

MTS Metropolitan Transit System

PYRAMID BUILDING
STRUCTURAL IMPROVEMENTS

GENERAL NOTES
SHEET 1 OF 2

SCALE: NO SCALE
CONTRACT NO.: WOA352-AE-27
DRAWING NO.: G-001
SHEET NO.: 2 OF 29

FOR REDUCED PLANS ORIGINAL SCALE IS IN INCHES 0 1 2 3

$PENBILL$
$PCTOOL$
$DATE$
$FILE$

FIRE LIFE SAFETY:

1. ALL RATED DOORS SHALL BE POSITIVE LATCHING.
2. ALL FIRE RATED DOOR ASSEMBLIES SHALL BE PROVIDED WITH APPROVED GASKETING MATERIAL INSTALLED TO PROVIDE A SEAL AND ACROSS THE TOP.
3. MANUFACTURERS INSTALLATION INSTRUCTIONS SHALL BE AVAILABLE ON THE JOB SITE FOR ALL RATED OPENING ASSEMBLIES.
4. PENETRATIONS THROUGH RATED WALLS AND FLOORS SHALL BE SEALED WITH A MATERIAL CAPABLE OF PREVENTING THE PASSAGE OF FLAMES AND HOT GASES WHEN SUBJECTED TO THE REQUIREMENTS OF THE TEST STANDARD SPECIFIC OF FIRE STOPS ASTM-E-814 AND UBC STANDARD 7-5.
5. ALL ELECTRICAL, MECHANICAL, AND PLUMBING PENETRATIONS, INCLUDING CONDUITS AND PIPING, THROUGH FIRE RATED WALL, FLOOR AND CEILING ASSEMBLIES SHALL BE TIGHTLY AND SOLIDLY SEALED WITH FIRE STOPPING COMPLYING WITH UBC STANDARD 7-5. WHERE ITEM PENETRATES AN AREA SEPARATION WALL, THE SECTION PASSING THROUGH THE WALL SURFACE AND THE FIXTURE CONNECTIONS THERETO SHALL BE ONLY OF METAL.
6. PORTABLE FIRE EXTINGUISHERS SHALL BE INSTALLED AND MAINTAINED IN ALL OCCUPANCY GROUPS AND AT SUCH LOCATIONS AS REQUIRED BY FIRE CODE 906 AND CALIFORNIA CODE OF REGULATIONS, TITLE 19, DIVISION 1, CHAPTER 3, THE FINAL NUMBER AND LOCATION OF ALL EXTINGUISHERS SHALL BE DETERMINED BY THE LOCAL AREA FIRE INSPECTOR.
7. PROVIDE A PORTABLE FIRE EXTINGUISHER WITH A RATING OF NOT LESS THAN 2-A-10BC WITHIN A 75 FOOT TRAVEL DISTANCE TO ALL PORTIONS OF THE BUILDING ON EACH FLOOR.
8. THE CONTRACTOR SHALL PROVIDE AND INSTALL TEMPORARY PEDESTRIAN PROTECTION AS REQUIRED BY LOCAL CODE AND SPECIFICATION.
9. DO NOT BLOCK EXITS AT ANY TIME.
10. THE AUTOMATIC SPRINKLER SYSTEM SHALL CONFORM TO THE REQUIREMENTS OF CBC SECTION 903.3.1.1 AND THE PROJECT MANUAL.
11. THE FIRE ALARM SYSTEM SHALL CONFORM TO THE REQUIREMENTS OF THE CALIFORNIA ELECTRICAL CODE, STANDARDS AS DEFINED IN THE CALIFORNIA BUILDING CODE AND APPLICABLE NFPA STANDARDS.
12. THE CONTRACTOR SHALL PROVIDE PROTECTION COMPLYING WITH TITLE 8, CCR, DURING WELDING. FURTHER PROTECTION SHALL BE PROVIDED TO ANY OCCUPANTS AND THE PUBLIC WITH PORTABLE SOLID VISION BARRICADES AROUND LOCATION WHERE WELDING IS BEING PERFORMED. PROVIDE SIGNS WARNING AGAINST LOOKING AT WELDING WITHOUT PROPER EYE PROTECTION OR EQUIVALENT.
13. ALL ON-SITE FIRE HYDRANTS MUST BE OPERATIONAL PRIOR TO DELIVERY OF ANY BUILDING MATERIALS.
14. FIRE RATED DOORS AND SMOKE, DRAFT DOORS SHALL COMPLY WITH CBC 716.2.
15. FIRE RATED GLAZING FOR FIRE RATED DOORS SHALL COMPLY WITH CBC 716.2.5. AND BE LABELED I MARKED IN ACCORDANCE WITH CBC TABLE 716.1(2).
16. ALL NEW BUILDINGS SHALL HAVE APPROVED RADIO COVERAGE FOR EMERGENCY RESPONDERS WITHIN THE BUILDING BASED UPON THE EXISTING COVERAGE LEVELS OF THE PUBLIC SAFETY COMMUNICATION SYSTEMS OF THE JURISDICTION, MEASURED AT THE EXTERIOR OF THE BUILDING IN ACCORDANCE WITH THE FIRE CODE 510. NEW BUILDINGS THAT CAN DEMONSTRATE MINIMUM RADIO COVERAGE SIGNAL STRENGTH THROUGHOUT THE INTERIOR OF THE BUILDING MAY BE EXEMPT PER FIRE CODE 510. WHEN AN APPROVED EMERGENCY RESPONDER RADIO COVERAGE SYSTEM IS PROVIDED, PLANS SHALL BE SUBMITTED TO THE FIRE ALARM PLAN CHECK UNIT FOR REVIEW AND APPROVAL PRIOR TO INSTALLATION (FIRE CODE 510.5.1).
17. IN THE EVENT OF POWER SUPPLY FAILURE IN ROOMS, SPACES AND BUILDINGS THAT REQUIRE TWO OR MORE MEANS OF EGRESS, AN EMERGENCY ELECTRICAL SYSTEM FOR A DURATION OF NOT LESS THAN 90 MINUTES IN ACCORDANCE WITH THE PROVISIONS SET FORTH IN BUILDING CODE 1008.3.
18. THE PATH OF EGRESS TRAVEL TO EXITS SHALL BE MARKED BY READILY VISIBLE EXIT SIGNS TO CLEARLY INDICATE THE DIRECTION OF EGRESS TRAVEL AS REQUIRED BY BUILDING CODE 1013.1; AND SHALL BE INTERNALLY OR EXTERNALLY ILLUMINATED AS REQUIRED BY SECTION 1013.3 AND 1013.5.NOTE: ADDITIONAL EXIT SIGNS MAY BE REQUIRED AT THE TIME OF FIELD INSPECTION.

ACCESSIBILITY

1. SITE ACCESSIBILITY

   PROVIDE WALKS WITH LEVEL LANDINGS AT ALL EXTERIOR EXIT DOORS COMPLYING WITH CHAPTER 10 AND 11B PART 2, TITLE 24, CCR, WITH NOT LESS THAN 60 INCHES x 60 INCHES IN DIMENSION AND WITH MAXIMUM 2% SLOPE.

   SURFACE CROSS SLOPE GRADIENT SHALL NOT EXCEED 2% PER FOOT AT WALKS AND PATHS WITHIN THE ACCESSIBLE PATH OF TRAVEL.

   PROVIDE ACCESSIBLE BUILDING ENTRANCES COMPLYING WITH CHAPTERS 10 AND 11B, PART 2, TITLE 24, CCR, UNLESS SHOWN OTHERWISE.

   CURB RAMPS SHALL CONFORM WITH CHAPTERS 11B, PART 2, TITLE 24 AND CCR.

   PROVIDE WARNING CURB, RAILING/GUIDE RAIL OR OTHER PROTECTIVE DEVICE AT ALL ABRUPT CHANGES IN LEVEL. (EXCEPT BETWEEN A WALK/SIDEWALK AND ADJACENT STREET OR DRIVEWAY) COMPLYING WITH CHAPTER 11B, PART 2, TITLE 24, CCR. PROVIDE MINIMUM 6 INCH HIGH CURB WHERE GUARDRAIL OR HANDRAIL IS PROVIDED. NO CURB IS REQUIRED IF WALKWAY IS 5% OR LESS IN GRADIENT OR NO ADJACENT HAZARD EXISTS.

   ACCESSIBLE ENTRY GATES SHALL BE DESIGNATED AT PATH OF TRAVEL. PROVIDE PANIC HARDWARE AT THESE GATES. THESE GATES AND HARDWARE SHALL CONFORM WITH CHAPTER 10, PART 2, TITLE 24.

2. DOOR CONSTRUCTION AND HARDWARE

   PROVIDE THE BOTTOM 10 INCHES OF ALL DOORS (EXCEPT AUTOMATIC AND SLIDING DOORS) WITH A SMOOTH UNINTERRUPTED SURFACE PERMITTING THE DOOR TO BE OPENED BY A WHEELCHAIR FOOTREST WITHOUT CREATING A TRAP HAZARD CONDITION.

   LIMIT DOOR OPERATING FORCE IN COMPLIANCE WITH CHAPTER 11B, PART 2, TITLE 24, CCR. MAXIMUM EFFORT TO OPERATE DOORS SHALL NOT EXCEED THE FOLLOWING:
   - *5 POUNDS FOR EXTERIOR DOORS
   - *5 POUNDS FOR INTERIOR DOORS
   - *THE AUTHORITY HAVING JURISDICTION MAY INCREASE THE MAXIMUM EFFORT TO OPERATE FIRE DOORS NOT TO EXCEED 15 LBS. MAX.

   PROVIDE DOOR OPENING HARDWARE COMPLYING WITH CHAPTERS 10 AND 11B, PART 2, TITLE 24, CCR. HEIGHTS OF HAND-ACTIVATED DOOR OPENING HARDWARE SHALL BE BETWEEN 34 AND 44 INCHES ABOVE THE FLOOR. REFER TO STANDARD MOUNTING HEIGHTS FOR EXACT CENTERLINE HEIGHTS.

   HAND-ACTIVATED LATCHING AND LOCKING DOORS, LOCATED IN THE PATH OF TRAVEL, SHALL BE OPERABLE WITH A SINGLE EFFORT BY LEVER TYPE HARDWARE, BY PANIC BARS, PUSH-PULL ACTIVATING BARS, OR OTHER HARDWARE DESIGNED TO PROVIDE PASSAGE WITHOUT REQUIRING THE ABILITY TO GRASP THE OPENING HARDWARE. LOCKED EXIT DOORS SHALL BE ACCESSIBLE AS SPECIFIED IN DIRECTION OF EGRESS, PANIC HARDWARE SHALL BE MOUNTED ABOVE 36 TO 44 INCHES ABOVE THE FLOOR.

   THRESHOLDS SHALL NOT BE MORE THAN 1/2 INCH LOWER THAN THRESHOLD OF THE DOORWAY WITH 1:2 SLOPED BEVEL FOR CHANGES FROM 1/4 TO 1/2 INCH. THESE THRESHOLDS SHALL COMPLY WITH CHAPTER 11B, PART 2, TITLE 24, CCR.

   ADDITIONAL NOTES:

   1. CHARACTER TYPE: CHARACTERS ON SIGNS SHALL BE RAISED1/32" (0.794 MM) MINIMUM AND SHALL BE SANS SERF UPPERCASE CHARACTERS ACCOMPANIED BY GRADE 2 BRAILLE (SEE NOTE 5 BELOW).
   2. CHARACTER SIZE: RAISED CHARACTERS SHALL BE A MINIMUM OF 5/8" (15.9 MM) AND A MAXIMUM OF 2" (51 MM) HIGH.
   3. FINISH AND CONTRAST: CONTRAST BETWEEN CHARACTERS, SYMBOLS AND THEIR BACKGROUND MUST BE 70% MINIMUM AND HAVE A NON-GLARE FINISH.
   4. PROPORTIONS: CHARACTERS ON SIGNS SHALL HAVE A WIDTH-TO-HEIGHT RATIO OF BETWEEN 3:5 AND 1:1 AND A STROKE WIDTH-TO-HEIGHT RATIO OF BETWEEN 1:5 AND 1:10.

      ALL LETTERS MEASURED MUST BE UPPERCASE. AFTER CHOOSING A TYPESTYLE TO TEST, BEGIN BY PRINTING THE LETTERS I, X, AND O AT 1 INCH HIGH. PLACE THE TEMPLATE'S 1:1 SQUARE OVER THE X OR O, WHICHEVER IS NARROWER. IF THE CHARACTER IS NOT WIDER THAN 1 INCH, NOR NARROWER THAN THE 3:5 RECTANGLE, THE PROPORTIONS ARE CORRECT. USE THE 1:5 RECTANGLE TO DETERMINE IF THE STROKE OF THE I IS TOO BROAD, AND THE 1:10 RECTANGLE TO SEE IF IT IS TOO NARROW. IF ALL THE TESTS ARE PASSED, THE TYPESTYLE IS COMPLIANT WITH PROPORTION CODE.
   5. BRAILLE: CALIFORNIA GRADE 2 BRAILLE SHALL BE USED WHEREVER BRAILLE IS REQUIRED IN OTHER PORTIONS OF THESE STANDARDS. DOTS SHALL BE 1/10 INCH (2.54 MM) ON CENTERS IN EACH CELL WITH 2/10 INCH (5.08 MM) SPACE BETWEEN CELLS, MEASURED FROM THE SECOND COLUMN OF DOTS IN THE FIRST CELL TO THE FIRST COLUMN OF DOTS IN THE SECOND CELL. DOTS SHALL BE RAISED A MINIMUM OF 1/40 INCH (0.635 MM) ABOVE THE BACKGROUND.

      RECOMMEND ROUNDED OR DOMED CALIFORNIA BRAILLE DOTS, EACH DISTINCT AND SEPARATE. DOTS WITH STRAIGHT SIDES AND FLAT TOPS ARE NOT READABLE FOR MANY BRAILLE USERS.

3. MEANS OF EGRESS ILLUMINATION

   ANY TIME A BUILDING OR A PORTION OF A BUILDING IS OCCUPIED, THE MEANS OF EGRESS SERVING THE OCCUPIED PORTION SHALL BE ILLUMINATED AT AN INTENSITY OF NOT LESS THAN 1-FOOTCANDLE (11 LUX) AT THE WALKING SURFACE LEVEL.

#PENTBL.S
#PLOTDATE.S

NO.	DATE	REVISIONS	BY	CHK	APRV

#DATER
#FILE.S

HDR

LICENSED ARCHITECT
OWEN STARKEY
C-41803
REN. 04/30/27
STATE OF CALIFORNIA

DESIGNED BY J.K. ANDRES	DATE 04/26
DRAWN BY J.K. ANDRES	04/26
CHECKED BY M. HARPER	04/26
APPROVED BY N. CAPPADOCIA	04/26

MTS Metropolitan Transit System

PYRAMID BUILDING
STRUCTURAL IMPROVEMENTS

GENERAL NOTES
SHEET 2 OF 2

SCALE	NO SCALE
CONTRACT NO.	WOA352-AE-27
DRAWING NO.	G-002
SHEET NO.	3 OF 29

FOR REDUCED PLANS
ORIGINAL SCALE IS IN INCHES 0 1 2 3

DRAWING SYMBOLS:

Sheet Number

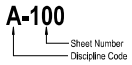

View Title

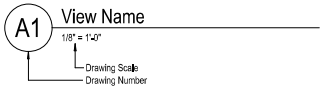

View Title with Reference

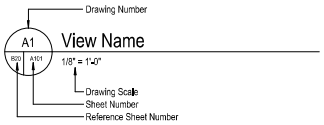

Exterior Elevations

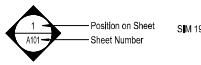

Interior Elevations

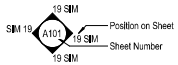

Match Lines

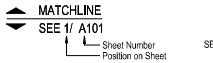

Area Reference

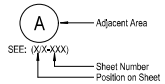

Building Section

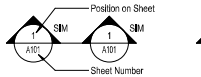

Wall Section

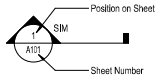

Detail - Section

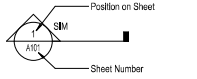

Detail - Plan/RCP

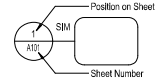

Drawing Revisions

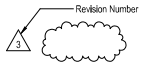

North Arrow

PLAN NORTH

Graphic Scale

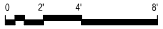

Column Grid Lines

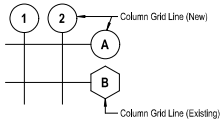

Level Datum

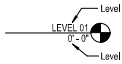

Spot Elevation

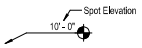

Spot Coordinates

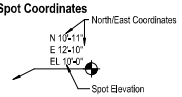

Room Tag

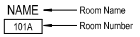

Centerline

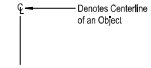

Sheet Keynote

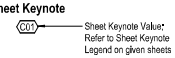

Keynote

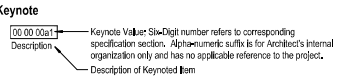

ABBREVIATIONS:

@	AT
AB	ANCHOR BOLT
ACC	ACCESSIBLE
AFF	ABOVE FINISH FLOOR
ALT	ALTERNATE
ALUM	ALUMINUM
ANNO	ANODIZED
APPD	APPROVED
APPROX	APPROXIMATE
ARCH	ARCHITECTURAL
ASD	ALLOWABLE STRESS DESIGN
BLDG	BUILDING
BLK	BLOCK
BM	BEAM
BN	BOUNDARY NAILING
BOT	BOTTOM
BTWN	BETWEEN
CFS	COLD-FORMED STEEL
CIP	CAST-IN-PLACE
CJP	COMPLETE JOINT PENETRATION
CL	CENTER LINE
CLR	CLEAR
CMU	CONCRETE MASONRY UNIT
COL	COLUMN
CONC	CONCRETE
CONN	CONNECTION
CONT	CONTINUOUS
CTR	CENTER
DBL	DOUBLE
DEMO	DEMOLITION
DEPT	DEPARTMENT
DET	DETAIL
DIA	DIAMETER
DIAG	DIAGONAL
DIM	DIMENSION
DN	DOWN
DO	DOOR OPENING
DTS	DETAILS
DWG	DRAWING
DWL	DOWEL
(E)	EXISTING
EA	EACH
EB	EXPANSION BOLT
EE	EACH END
EF	EACH FACE
EFF	EFFECTIVE
EL	ELEVATION
ELEC	ELECTRICAL
EOS	EDGE OF SLAB
EQ	EQUAL
ES	EACH SIDE
EW	EACH WAY
EXP	EXPANSION
EXT	EXTERIOR
FA	FIRE ALARM
FB	FACE BRICK
FND	FOUNDATION
FE	FIRE EXTINGUISHER
FEC	FIRE EXTINGUISHER CABINET
FL	FLOOR
FO	FACE OF
FP	FIRE PROTECTION
FT	FEET
FTG	FOOTING
FV	FIELD VERIFY
GALV	GALVANIZED
GC	GENERAL CONTRACT(OR)
GLB	GLULAM BEAM
GR	GRADE
GL	GLULAM/GRIDLINE
HCP	HANDICAPPED
HSS	HOLLOW STRUCTURAL SECTION
HM	HOLLOW METAL (STEEL FRAME)
HNDRL	HANDRAIL
HORIZ	HORIZONTAL
HR	HOUR
HT	HEIGHT
HVAC	HEATING, VENTILATION, AIR CONDITIONING
IF	INSIDE FACE
IN	INCH
INCL	INCLUDED / INCLUDING
INFO	INFORMATION
JAN	JANITOR
JC	JANITOR'S CLOSET
JT	JOINT
K	KIP (1000 LBF)
LAV	LAVATORY
LB	POUND
LWT	LIGHTWEIGHT
MAS	MASONRY
MAX	MAXIMUM
MECH	MECHANICAL
MET	METAL
MFR	MANUFACTURER
MIN	MINIMUM
MISC	MISCELLANEOUS
MO	MASONRY OPENING
MTL	METAL
(N)	NEW
N	NORTH
NA	NOT APPLICABLE
NIC	NOT IN CONTRACT
NO	NUMBER
NTS	NOT TO SCALE
NWT	NORMAL WEIGHT
OC	ON CENTER
OH	OVER HEAD
OPNG	OPENING
OTS	OPEN TO STRUCTURE
P	PAINT
PARTN	PARTITION
PERP	PERPENDICULAR
PJP	PARTIAL JOINT PENETRATION
PL	PLATE
PLF	POUNDS PER LINEAR FOOT
PREFAB	PREFABRICATED
PROJ	PROJECT
PSF	POUNDS PER SQUARE FOOT
PSI	POUNDS PER SQUARE INCH
PT	POINT
PTN	PARTITION
QTY	QUANTITY
(R)	RELOCATED
RECPT	RECEPTACLE
REF	REFERENCE
REINF	REINFORCED / REINFORCING
REQ	REQUIRE / REQUIRED
REV	REVISION / REVISED
RM	ROOM
RO	ROUGH OPENING
S	SOUTH
SCHED	SCHEDULE
SDGE	SAN DIEGO GAS AND ELECTRIC
SECT	SECTION
SEOR	STRUCTURAL ENGINEER OF RECORD
SF	SQUARE FEET/FOOT
SH	SPRINKLER HEAD
SHT	SHEET
SIM	SIMILAR
SMS	SHEET METAL SCREW
SOG	SLAB ON GRADE
SOMD	SLAB ON METAL DECK
SPEC	SPECIFICATION
SPR	SPRINKLER
SQ	SQUARE
SST	STAINLESS STEEL
STD	STANDARD
STL	STEEL
STRL	STRUCTURAL
T&B	TOB AND BOTTOM
THK	THICKNESS
THRU	THROUGH
TOC	TOP OF CONCRETE
TOS	TOP OF SLAB, TOP OF STRUCTURE
TYP	TYPICAL
UNO	UNLESS NOTED OTHERWISE
VERT	VERTICAL
VIF	VERIFY IN FIELD
W/	WITH
WC	WATER CLOSET
W/O	WITHOUT
WP	WATERPROOFING
WPM	WATERPROOF MEMBRANE
WS	WEATHERSTRIPPING

NO.	DATE	REVISIONS	BY	CHK	APRV

HDR

LICENSED ARCHITECT OWEN STARKEY C-41803 REN. 04/31/27 STATE OF CALIFORNIA

DESIGNED BY J.K. ANDRES	DATE 04/26
DRAWN BY J.K. ANDRES	04/26
CHECKED BY M. HARPER	04/26
APPROVED BY N. CAPPADOCIA	04/26

MTS Metropolitan Transit System

PYRAMID BUILDING
STRUCTURAL IMPROVEMENTS

LEGEND, ABBREVIATIONS, AND SYMBOLS

SCALE: NO SCALE
CONTRACT NO.: WOA352-AE-27
DRAWING NO.: G-003
SHEET NO.: 4 OF 29

FOR REDUCED PLANS ORIGINAL SCALE IS IN INCHES 0 1 2 3

$PENTBL$
$PLTDNL$
$DATE$
$FILE$

TABLE 506.2 ALLOWABLE AREA FACTOR IN SQUARE FEET

OCCUPANCY CLASSIFICATION	TYPE OF CONSTRUCTION												
	FIRE PROTECTION	TYPE I		TYPE II		TYPE III		TYPE IV				TYPE V	
S-2	NS	UL	79,000	39,000	26,000	39,000	26,000	115,500	77,000	46,125	38,500	21,00	13,500
	S1	UL	316,000	156,000	104,000	156,000	104,000	462,000	308,000	192,500	154,000	84,000	54,000
	SM	UL	237,000	117,000	78,000	117,000	78,000	346,500	231,000	144,375	115,500	63,000	40,500

NS = Buildings not equipped throughout with an automatic sprinkler system installed in accordance with National Fire Protection Association (NFPA) 13
S1 = Buildings a maximum of (1) story above grade plane equipped throughout with an automatic sprinkler system installed in accordance with National Fire Protection Association (NFPA) 13

SM = Buildings (2) or more stories above grade plane equipped throughout with an automatic sprinkler system installed in accordance with National Fire Protection Association (NFPA) 13

UL = Unlimited

TABLE 906.3(1)

FOR FEC SIZE REFER TO SPECIFICATIONS

	'S' OCCUPANCY
MINIMUM-RATED SINGLE EXTINGUISHER	2-A
MAXIMUM FLOOR AREA PER UNIT OF A	3,000 SQUARE FEET
MAXIMUM FLOOR AREA FOR EXTINGUISHER	11,250 SQUARE FEET
MAXIMUM DISTANCE OF TRAVEL TO EXTINGUISHER	75 FEET

PER TABLE 906.3(1) MAXIMUM DISTANCE OF TRAVEL TO EXTINGUISHER IS 75 FEET.

FIRE RESISTIVE RATING OF STRUCTURE : CONSTRUCTION TYPE V-B PER TABLE 601

BUILDING ELEMENT	PERMITTED/REQUIRED
PRIMARY STRUCTURAL FRAME	0 HOUR
BEARING WALLS:	
EXTERIOR	0 HOURS
INTERIOR	0 HOUR
NON-BEARING WALLS & PARTITIONS:*	0HOUR
EXTERIOR	0 HOUR
INTERIOR	0 HOUR
FLOOR ASSEMBLY	0 HOUR
ROOF ASSEMBLY	0 HOUR
SHAFTS	

* = TABLE 705.5 FIRE RESISTANCE RATINGS FOR EXT. WALLS BASED ON FSD

FIRE RESISTIVE RATED ASSEMBLIES

CONTROL AREA FOR HAZARDOUS MATERIALS	N/A
EXIT ACCESS STAIRS	N/A
SHAFT ENCLOSURES	N/A
EXIT PASSAGEWAY	N/A
CORRIDOR	N/A
OCCUPANCY SEPARATIONS	0 HOUR
PARTY/FIRE WALL SEPARATION	0 HOUR
SMOKE BARRIER SEPARATION	N/A
HORIZONTAL ASSEMBLY	N/A
ELEVATOR HOISTWAY	N/A

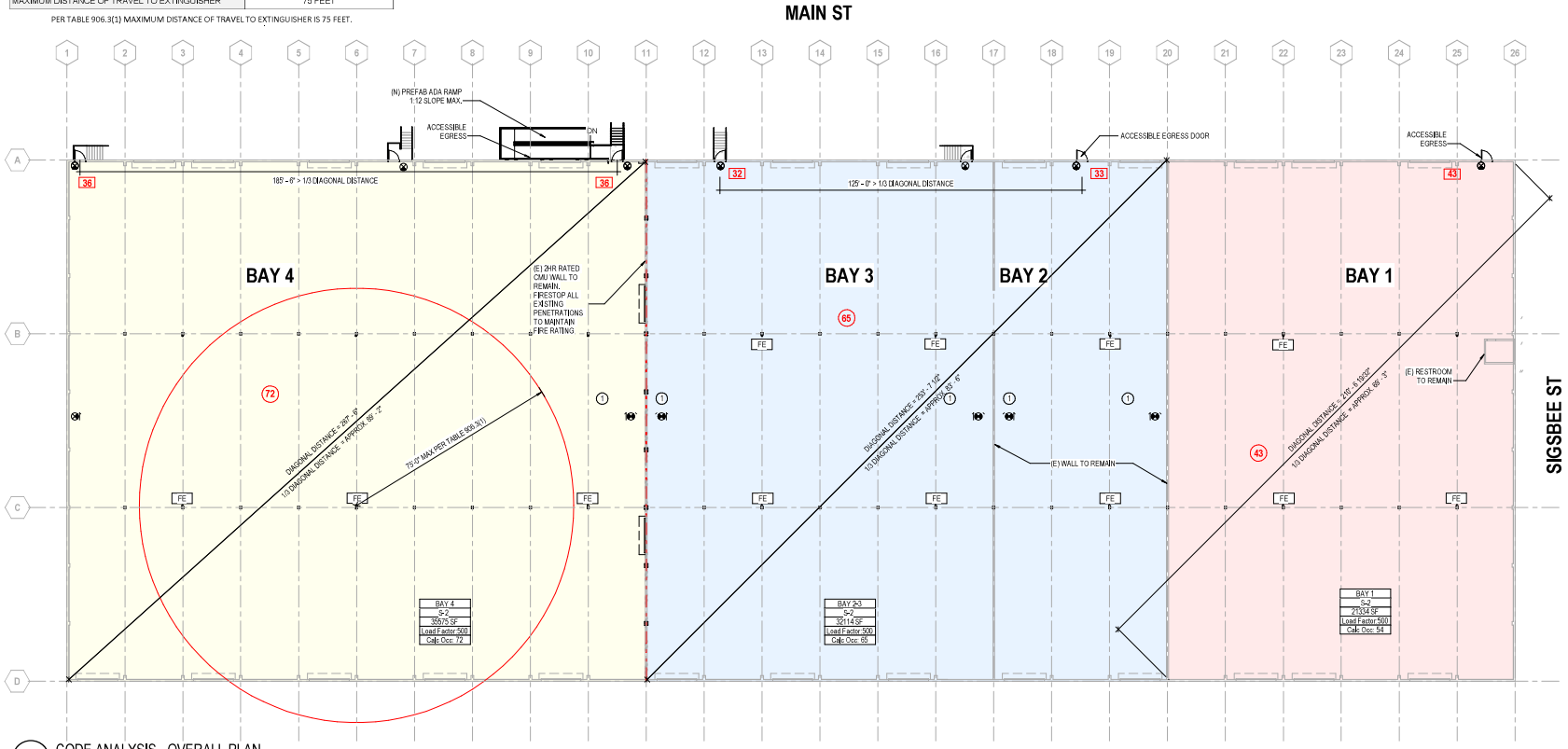

A1 CODE ANALYSIS - OVERALL PLAN
1" = 20'-0"

LIFE SAFETY LEGEND

DOOR — EGRESS COMPONENT - OCCUPANT LOAD AND WIDTH (IN INCHES)
Clear Width:33" — ACTUAL CLEAR WIDTH PROVIDED
Max Occ:165 — MAXIMUM ALLOWED OCCUPANT LOAD PER EXIT (CBC 1005.3)
Req Width:28" — REQUIRED MINIMUM WIDTH PER OCCUPANCY (CBC 1005.3)
Calc Occ:140 — CALCULATED OCCUPANT LOAD PER EXIT (CBC 1004)

Area Name:101
Occ Classification — EGRESS COMPONENT - AREA
Group B — OCCUPANCY GROUP
150 SF — AREA PER OCCUPANT(CBC 1004.5)
Load Factor:300 — REQUIRED LOAD FACTOR PER OCCUPANCY (CBC 1004.5)
Calc Occ: 100 — CALCULATED OCCUPANT LOAD PER EXIT (CBC 1004)

185'-9" TRAVEL DISTANCE — TRAVEL DISTANCE: LONGEST ROUTE TO AN EXIT (MAXIMUM PER SPACE/AREA SHOWN) (CBC 1017.2)

55'-9" COMMON PATH — COMMON PATH: DISTANCE TRAVELED BEFORE AN EXIT PATH IS CHOSEN (MAXIMUM PER SPACE/ AREA SHOWN) (CBC 1006.2)

ILLUMINATED EXIT SIGN

FE — FIRE EXTINGUISHER SURFACE MOUNTED (SCREENED IF EXISTING) MAX TRAVEL DISTANCE: 75' - (CBC TABLE 906.3(1))

65 — OCCUPANT LOAD

33 — OCCUPANT LOAD AT EXIT

PARTITION RATING GRAPHICS

PARTITIONS REQUIRED TO BE SMOKE RESISTANT, FIRE RESISTANT, OR BOTH FIRE AND SMOKE RESISTANT ARE SHOWN GRAPHICALLY ON PLANS WITH HATCH PATTERNS.

PARTITION RATING GRAPHIC DESIGNATION

2 HR FIRE RATING

NON-RATED PARTITION

NO.	DATE	REVISIONS	BY	CHK	APRV

HDR

LICENSED ARCHITECT OWEN STARKEY C-41803 REN. 04/30/27 STATE OF CALIFORNIA

DESIGNED BY	J.L. CHOW	DATE 04/26
DRAWN BY	O. STARKEY	04/26
CHECKED BY	M. HARPER	04/26
APPROVED BY	N. CAPPADOCIA	04/26

MTS Metropolitan Transit System

PYRAMID BUILDING STRUCTURAL IMPROVEMENTS

CODE ANALYSIS

SCALE: NO SCALE
CONTRACT NO.: WO352-AE-27
DRAWING NO.: G-010
SHEET NO.: 5 OF 29

FOR REDUCED PLANS ORIGINAL SCALE IS IN INCHES 0 1 2 3

EXIT ANALYSIS

REQUIRED CAPACITY BASED ON OCCUPANT LOAD PER CBC 1005.3

		REQUIRED	PROVIDED	CODE REFERENCE
STAIR CAPACITY	(36) * 0.2"	8"	50"	1005.3.1 exp 1
	(36) * 0.2"	8"	60"	1005.3.1 exp 1
	(32) * 0.2"	7"	54"	1005.3.1 exp 1
DOOR CAPACITY	(36) * 0.15"	6"	44"	1005.3.2 exp 1
	(36) * 0.15"	6"	44"	1005.3.2 exp 1
	(32) * 0.15"	5"	44"	1005.3.2 exp 1
	(33) * 0.15"	5"	44"	1005.3.2 exp 1
	(43) * 0.15"	7"	44"	1005.3.2 exp 1

EXIT ACCESS TRAVEL DISTANCE PER CBC TABLE 1017.2 & COMMON PATH PER TABLE 1006.2.1

OCCUPANCY CLASSIFICATION	WITH SPRINKLER SYSTEM	COMMON PATH OF EGRESS (W/SPRINKLER)
S-2	400 FT	100

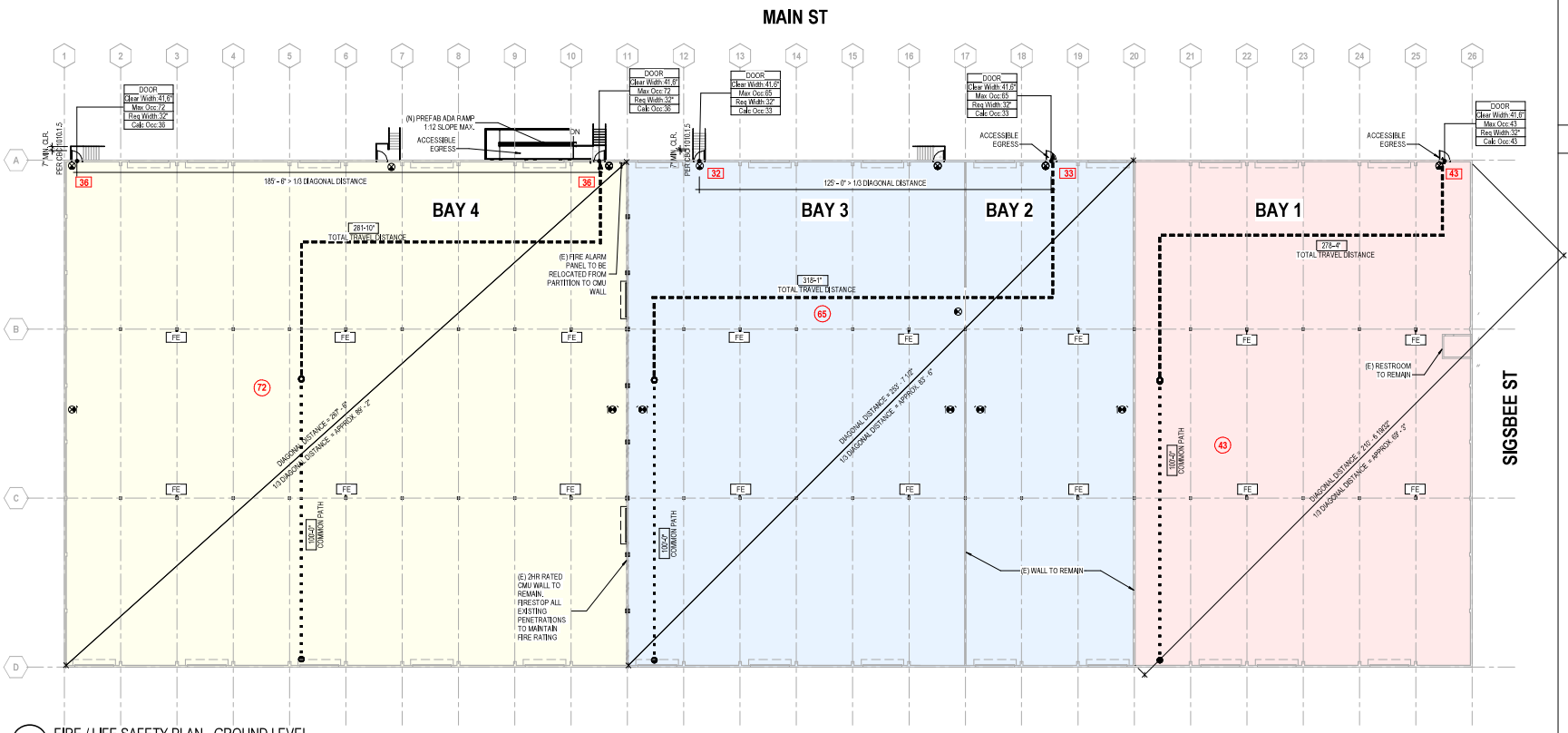

A1 FIRE / LIFE SAFETY PLAN - GROUND LEVEL
1" = 20'-0"

LIFE SAFETY LEGEND

DOOR / Clear Width:32" / Max Occ:165 / Req Width:28" / Calc Occ:140 — EGRESS COMPONENT - OCCUPANT LOAD AND WIDTH (IN INCHES)
- ACTUAL CLEAR WIDTH PROVIDED
- MAXIMUM ALLOWED OCCUPANT LOAD PER EXIT (CBC 1005.3)
- REQUIRED MINIMUM WIDTH PER OCCUPANCY (CBC 1005.3)
- CALCULATED OCCUPANT LOAD PER EXIT (CBC 1004)

Area Name 101 / Occ Classification: Group B / 150 SF / Load Factor 300 / Calc Occ: 100 — EGRESS COMPONENT - AREA
- OCCUPANCY GROUP
- AREA PER OCCUPANT(CBC 1004.5)
- REQUIRED LOAD FACTOR PER OCCUPANCY (CBC 1004.5)
- CALCULATED OCCUPANT LOAD PER EXIT (CBC 1004)

185'-8" TRAVEL DISTANCE — TRAVEL DISTANCE: LONGEST ROUTE TO AN EXIT (MAXIMUM PER SPACE/AREA SHOWN) (CBC 1017.2)

55'-0" COMMON PATH — COMMON PATH: DISTANCE TRAVELED BEFORE AN EXIT PATH IS CHOSEN (MAXIMUM PER SPACE/ AREA SHOWN) (CBC 1006.2)

ILLUMINATED EXIT SIGN

FE — FIRE EXTINGUISHER SURFACE MOUNTED (SCREENED IF EXISTING) MAX TRAVEL DISTANCE: 75' - (CBC TABLE 906.3(1))

65 — OCCUPANT LOAD

33 — OCCUPANT LOAD AT EXIT

PARTITION RATING GRAPHICS

PARTITIONS REQUIRED TO BE SMOKE RESISTANT, FIRE RESISTANT, OR BOTH FIRE AND SMOKE RESISTANT ARE SHOWN GRAPHICALLY ON PLANS WITH HATCH PATTERNS.

PARTITION RATING GRAPHIC DESIGNATION

- 2 HR FIRE RATING
- NON-RATED PARTITION

NO.	DATE	REVISIONS	BY	CHK	APRV

HDR

LICENSED ARCHITECT OWEN STARKEY C-41803 REN. 04/30/27 STATE OF CALIFORNIA

DESIGNED BY J.L. CHOW	DATE 04/26
DRAWN BY O. STARKEY	04/26
CHECKED BY M. HARPER	04/26
APPROVED BY N. CAPPADOCIA	04/26

MTS Metropolitan Transit System

PYRAMID BUILDING STRUCTURAL IMPROVEMENTS

FIRE LIFE SAEFTY PLAN SHEET

SCALE: NO SCALE
CONTRACT NO.: WO352-AE-27
DRAWING NO.: G-011
SHEET NO.: 6 OF 29

FOR REDUCED PLANS ORIGINAL SCALE IS IN INCHES 0 1 2 3

GENERAL NOTES:

1. NOT ALL OF THE DIAGRAMS ON THIS SHEET MAY BE APPLICABLE TO THIS SPECIFIC PROJECT RELATED TO SCOPE.
2. DIAGRAMS ON THIS SHEET ARE A COMPILATION OF REQUIREMENTS FROM THE 2010 ADA STANDARDS AND THE 2022 CALIFORNIA BUILDING CODE CHAPTER 11B.
3. IF OTHER DRAWINGS AND / OR NOTES WITHIN THIS SET OF CONTRACT DRAWINGS CONFLICT WITH THE INFORMATION ON THIS SHEET, THE INFORMATION ON THIS SHEET CONTROLS. CONTACT THE ARCHITECT FOR ANY CLARIFICATION REQUIRED TO OTHER INFORMATION.

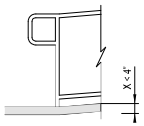

D1 ACCESSIBLE RAMP EDGE PROTECTION
SCALE: 1/2" = 1'-0"

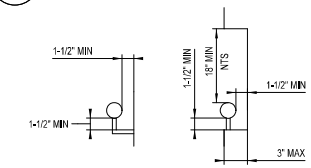

NOTE:
HANDRAIL SUPPORTS AT BOTTOM MAY NOT OBSTRUCT MORE THAN 20 PERCENT OF THE LENGTH OF THE HANDRAIL.

C1 ACCESSIBLE HANDRAIL CLEARANCE
SCALE: 1-1/2" = 1'-0"

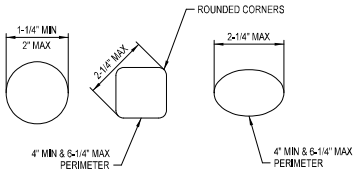

B1 ACCESSIBLE STAIR/RAMP HANDRAIL SECT.
SCALE: 6" = 1'-0"

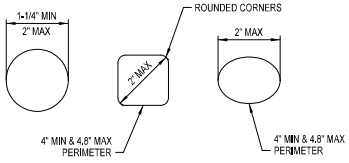

A1 GRAB BAR HANDRAIL CROSS SECTIONS
SCALE: 6" = 1'-0"

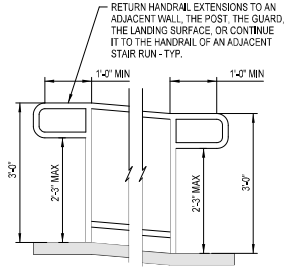

RAMPS

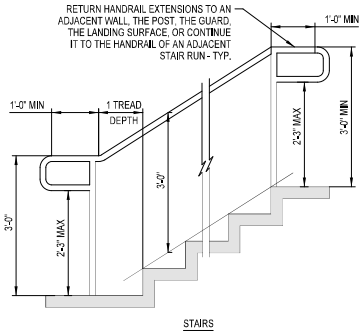

STAIRS

B2 ACCESSIBLE HANDRAIL EXTENSIONS
SCALE: 3/4" = 1'-0"

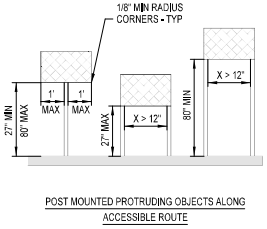

POST MOUNTED PROTRUDING OBJECTS ALONG ACCESSIBLE ROUTE

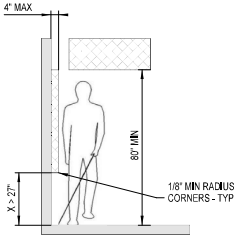

PROTRUDING OBJECTS ALONG ACCESSIBLE ROUTE

A2 ACCESSIBLE PROTRUDING OBJECTS
SCALE: 3/8" = 1'-0"

RAMP DESIGN PARAMETERS:

- 1:12 MAX RUNNING SLOPE
- 1:48 MAX CROSS SLOPE
- 30" MAX RISE FOR ANY SINGLE RUN
- 48" MINIMUM WIDTH
- HANDRAILS BOTH SIDES
- 3-1/2" MAX HANDRAIL PROJECTION INTO RAMP
- CONTINUOUS CURB OR WHEEL RAIL ON ALL RAMP RUNS
- EDGE PROTECTION ON RAMP RUNS & LANDINGS W/ DROP OFFMORE THAN 1/2" WITHIN 10" OF MIN LANDING DIMENSIONS

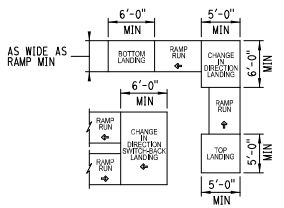

TOP, BOTTOM & DIRECTION CHANGE RAMP LANDINGS

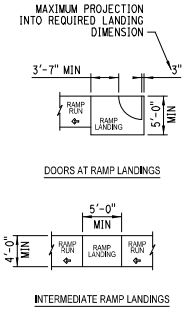

INTERMEDIATE RAMP LANDINGS

C3 ACCESSIBLE RAMP LANDINGS
SCALE: 1/8" = 1'-0"

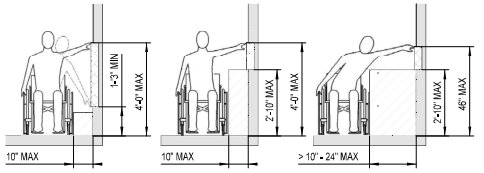

UNOBSTRUCTED

OBSTRUCTED HIGH REACH

B3 ACCESSIBLE REACH - SIDE REACH
SCALE: 3/8" = 1'-0"

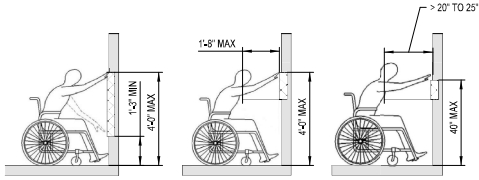

UNOBSTRUCTED

OBSTRUCTED - HIGH

NOTE:
THE FORWARD REACH OVER OBSTRUCTIONS CANNOT EXCEED THE ACTUAL TOE & KNEE SPACE PROVIDED.

A3 ACCESSIBLE REACH - FORWARD REACH
SCALE: 3/8" = 1'-0"

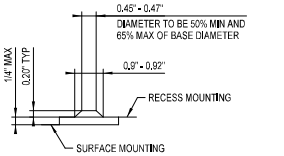

CROSS SECTION

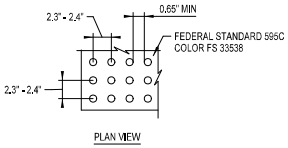

PLAN VIEW

B4 ACCESSIBLE DETECTABLE WARNING
SCALE: 1-1/2" = 1'-0"

*SIDEWALKS: 48" MIN
*CORRIDORS: 36" MIN WHEN SERVING LESS THAN 10 OCCUPANTS
44" WHEN SERVING 10 OR MORE OCCUPANTS
*AISLES: 36" MIN WHEN SERVING ELEMENTS ON ONE SIDE ONLY
44" MIN WHEN SERVING ELEMENTS ON BOTH SIDES

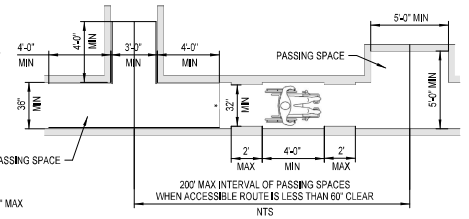

NTS

ACCESSIBLE ROUTE CLEAR WIDTH REQUIREMENTS

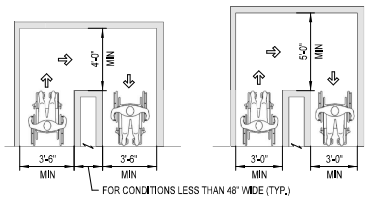

CLEAR WIDTH REQUIREMENTS AT TURNS

A4 ACCESSIBLE ROUTE CLEARANCES
SCALE: 1/4" = 1'-0"

NO.	DATE	REVISIONS	BY	CHK	APRV

HDR

LICENSED ARCHITECT OWEN STARKEY C-41803 REN. 04/30/27 STATE OF CALIFORNIA

DESIGNED BY J.L. CHOW	DATE 04/26
DRAWN BY O. STARKEY	04/26
CHECKED BY M. HARPER	04/26
APPROVED BY N. CAPPADOCIA	04/26

MTS Metropolitan Transit System

PYRAMID BUILDING
STRUCTURAL IMPROVEMENTS

ARCHITECTURAL
ACCESSIBILITY DIAGRAMS
CBC 2025 - SHEET 1 OF 3

SCALE	AS SHOWN
CONTRACT NO.	WOA352-AE-27
DRAWING NO.	G-020
SHEET NO.	7 OF 29

FOR REDUCED PLANS ORIGINAL SCALE IS IN INCHES 0 1 2 3

$PENTBL$
$PCTOBL$
$DATER$
$FILES$

GENERAL NOTES:

1. NOT ALL OF THE DIAGRAMS ON THIS SHEET MAY BE APPLICABLE TO THIS SPECIFIC PROJECT RELATED TO SCOPE.
2. DIAGRAMS ON THIS SHEET ARE A COMPILATION OF REQUIREMENTS FROM THE 2010 ADA STANDARDS AND THE 2022 CALIFORNIA BUILDING CODE CHAPTER 11B.
3. IF OTHER DRAWINGS AND / OR NOTES WITHIN THIS SET OF CONTRACT DRAWINGS CONFLICT WITH THE INFORMATION ON THIS SHEET, THE INFORMATION ON THIS SHEET CONTROLS. CONTACT THE ARCHITECT FOR ANY CLARIFICATION REQUIRED TO OTHER INFORMATION.

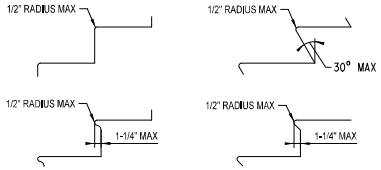

B1 - ACCESSIBLE STAIR NOSINGS
SCALE: 1" = 1'-0"

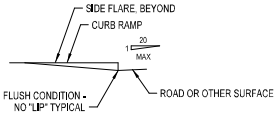

B2 - ACCESSIBLE CURB RAMP COUNTER SLOPE
SCALE: 1/4" = 1'-0"

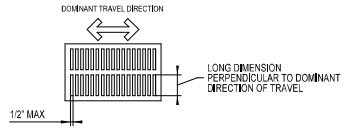

C2 - ACCESSIBLE OPEN GRATE
SCALE: 1" = 1'-0"

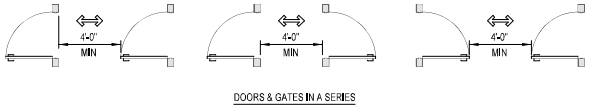

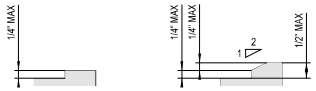

B3 - ACCESSIBLE CHANGE IN ELEVATION
SCALE: 6" = 1'-0"

NOTES:

1. THERE MUST BE A CLEAR FLOOR SPACE AT EACH ACCESSIBLE WALL MOUNTED ELEMENT OR OPERABLE PART THAT IS FREE OF OTHER OBSTRUCTIONS OR ELEMENTS (I.E. CABINETS, FURNITURE, EQUIPMENT, PLANTS, ETC.)
2. AT LEAST ONE FULL UNOBSTRUCTED SIDE OF ALL CLEAR FLOOR OR GROUND SPACES MUST ADJOING AN ACCESSIBLE ROUTE OR ANOTHER CLEAR FLOOR SPACE (TYPICAL).

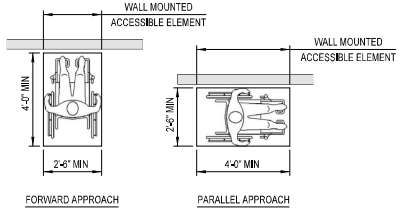

B4 - ACCESSIBLE CLEAR APPROACH
SCALE: 3/8" = 1'-0"

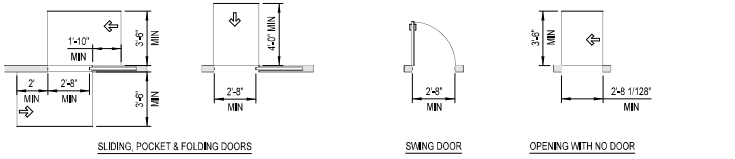

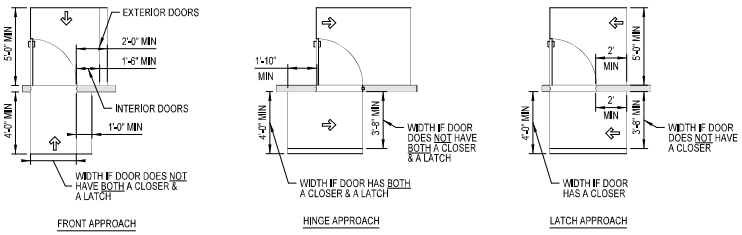

A1 - ACCESSIBLE DOOR MANUEVERING CLEARANCES
SCALE: 1/4" =1'-0"

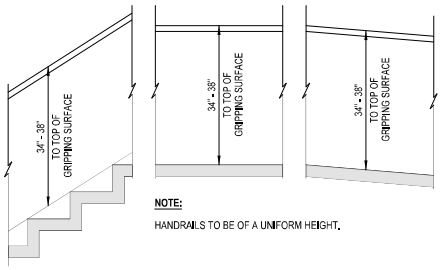

NOTE:
HANDRAILS TO BE OF A UNIFORM HEIGHT.

A2 - ACCESSIBLE HANDRAIL HEIGHT
SCALE: 3/4" = 1'-0"

NOTE:
AT LEAST ONE FULL UNOBSTRUCTED SIDE OF ALL CLEAR FLOOR OR GROUND SPACES MUST ADJOIN AN ACCESSIBLE ROUTE OR ANOTHER CLEAR FLOOR SPACE (TYPICAL).

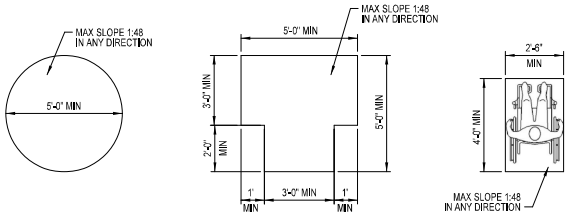

A3 - ACCESSIBLE CLEAR FLOOR SPACE
SCALE: 3/8" = 1'-0"

NO.	DATE	REVISIONS	BY	CHK	APRV

HDR

LICENSED ARCHITECT OWEN STARKEY C-41803 REN. 04/30/27 STATE OF CALIFORNIA

		DATE
DESIGNED BY	J.L. CHOW	04/26
DRAWN BY	O. STARKEY	04/26
CHECKED BY	M. HARPER	04/26
APPROVED BY	N. CAPPADOCIA	04/26

MTS Metropolitan Transit System

PYRAMID BUILDING
STRUCTURAL IMPROVEMENTS

ARCHITECTURAL
ACCESSIBILITY DIAGRAMS
CBC 2025 - SHEET 2 OF 3

SCALE	AS SHOWN
CONTRACT NO.	WOA352-AE-27
DRAWING NO.	G-021
SHEET NO.	8 OF 29

FOR REDUCED PLANS ORIGINAL SCALE IS IN INCHES 0 1 2 3

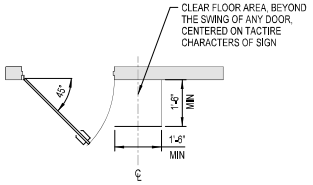

SIGN PLACEMENT NOTES:

- TACTILE SIGNS TO BE PLACED AT THE LATCH SIDE OF THE DOOR
- TACTILE SIGNS AT DOUBLE DOORS WITH AN INACTIVE LEAF, THE SIGN SHALL BE PLACED ON THE INACTIVE LEAF
- TACTILE SIGNS AT DOUBLE DOORS WITH BOTH LEAVES ACTIVE, THE SIGN SHALL BE PLACED AT THE RIGHT OF THE RIGHT HAND DOOR LEAF
- WHERE THERE IS NO WALL SPACE AT THE LATCH SIDE OF A SINGLE DOOR OR THE RIGHT SIDE OF DOUBLE DOORS, SIGNS SHALL BE LOCATED ON THE NEAREST ADJACENT WALL
- PERMANENT ROOM IDENTIFICATION SIGNS SHALL BE LOCATED AT THE ENTRACE TO AND OUTSIDE OF THE ROOM OR SPACE

B1 - ACCESSIBLE TACTILE SIGNS AT DOORS

SCALE:1/2" = 1'-0"

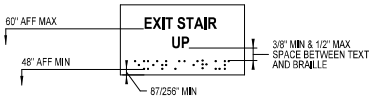

NOTES:

- PROVIDE SIGN AT EACH EXIT ACCESS DOOR TO A STAIRWAY LEADING DIRECTLY TO A GRADE LEVEL EXTERIOR EXIT
- SIGN LETTERS SHALL BE RAISED CHARACTERS & ALL CAPS
- BRAILLE TO BE GRADE 2
- RAISED CHARACTERS TO BE 5/8" TALL MINIMUM & 2" MAXIMUM
- REPLACE "STAIR" WITH "RAMP" AS APPROPRIATE
- TEXT AND BRAILLE TO COMPLY WITH CBC 11B-703

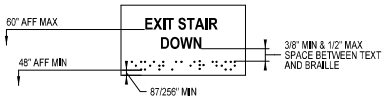

NOTES:

- PROVIDE SIGN AT EACH EXIT ACCESS DOOR TO A STAIRWAY LEADING DIRECTLY TO A GRADE LEVEL EXTERIOR EXIT
- SIGN LETTERS SHALL BE RAISED CHARACTERS & ALL CAPS
- BRAILLE TO BE GRADE 2
- RAISED CHARACTERS TO BE 5/8" TALL MINIMUM & 2" MAXIMUM
- REPLACE "STAIR" WITH "RAMP" AS APPROPRIATE
- TEXT AND BRAILLE TO COMPLY WITH CBC 11B-703

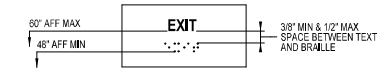

NOTES:

- PROVIDE SIGN AT EACH GRADE LEVEL EXTERIOR EXIT DOOR
- SIGN LETTERS SHALL BE RAISED CHARACTERS & ALL CAPS
- BRAILLE TO BE GRADE 2
- RAISED CHARACTERS TO BE 5/8" TALL MINIMUM & 2" MAXIMUM

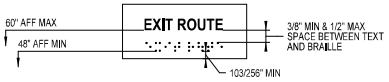

NOTES:

- PROVIDE SIGN AT EACH EXIT ACCESS DOOR FOR ROOMS REQUIRING 2 OR MORE EXITS
- PROVIDE SIGN AT EACH EXIT ACCESS DOOR TO A STAIR EXIT ENCLOSURE LEADING TO A GRADE LEVEL EXERIOR EXIT
- PROVIDE SIGN AT EACH EXIT ACCESS DOOR TO AN EXIT PASSAGEWAY
- SIGN LETTERS SHALL BE RAISED CHARACTERS & ALL CAPS BRAILLE TO BE GRADE 2
- RAISED CHARACTERS TO BE 5/8" TALL MINIMUM & 2" MAXIMUM
- TEXT AND BRAILLE TO COMPLY WITH CBC 11B-703

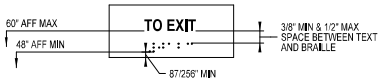

NOTES:

- PROVIDE SIGN AT EACH HORIZONTAL EXIT DOOR
- SIGN LETTERS SHALL BE RAISED CHARACTERS & ALL CAPS
- BRAILLE TO BE GRADE 2
- RAISED CHARACTERS TO BE 5/8" TALL MINIMUM & 2" MAXIMUM
- TEXT AND BRAILLE TO COMPLY WITH CBC 11B-703

A1 - ACESSIBLE EGRESS SIGNS

SCALE: 3" = 1'-0"

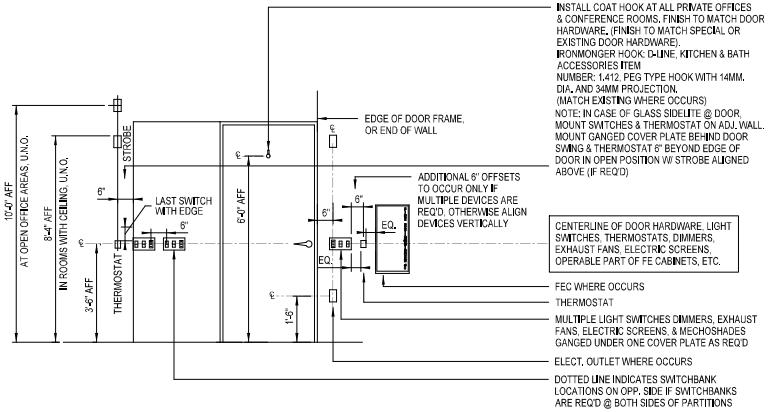

LOCATION OF LIGHT SWITCHES & DEVICES (TYPICAL)

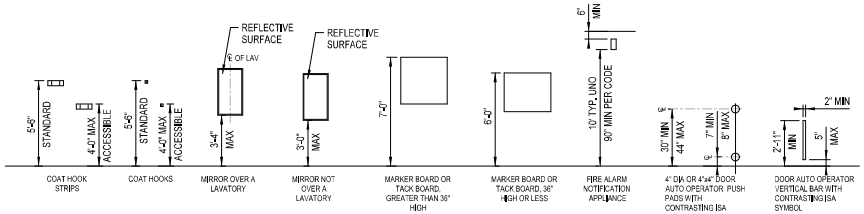

TYPICAL MISCELLANEOUS EQUIPMENT MOUNTING HEIGHTS

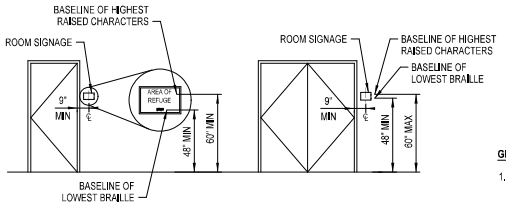

NOTES:

SIGN PLACEMENT FROM DOOR ASSUMES CENTER JUSTIFIED RAISED TEXT.
LEFT JUSTIFIED RAISED TEXT REQUIRES DIMENSIONAL ADJUSTMENT PER CBC 11B-703.4.2

TYPICAL SIGNAGE MOUNTING

A2 - CALIF. TYP MOUNTING HEIGHTS - SIGNAGE

SCALE: 1/4" = 1'-0"

GENERAL NOTES:

1. NOT ALL OF THE DIAGRAMS ON THIS SHEET MAY BE APPLICABLE TO THIS SPECIFIC PROJECT RELATED TO SCOPE.
2. DIAGRAMS ON THIS SHEET ARE A COMPILATION OF REQUIREMENTS FROM THE 2010 ADA STANDARDS AND THE 2022 CALIFORNIA BUILDING CODE CHAPTER 11B.
3. IF OTHER DRAWINGS AND / OR NOTES WITHIN THIS SET OF CONTRACT DRAWINGS CONFLICT WITH THE INFORMATION ON THIS SHEET, THE INFORMATION ON THIS SHEET PREVAILS. CONTACT THE ARCHITECT FOR ANY CLARIFICATION REQUIRED TO OTHER INFORMATION.

NO.	DATE	REVISIONS	BY	CHK	APRV

HDR

LICENSED ARCHITECT OWEN STARKEY C-41803 REN. 04/30/27 STATE OF CALIFORNIA

DESIGNED BY J.L. CHOW	DATE 04/26
DRAWN BY O. STARKEY	04/26
CHECKED BY M. HARPER	04/26
APPROVED BY N. CAPPADOCIA	04/26

MTS Metropolitan Transit System

PYRAMID BUILDING
STRUCTURAL IMPROVEMENTS

ARCHITECTURAL
ACCESSIBILITY DIAGRAMS
CBC 2025 - SHEET 3 OF 3

SCALE	AS SHOWN
CONTRACT NO.	WOA352-AE-27
DRAWING NO.	G-022
SHEET NO.	9 OF 29

FOR REDUCED PLANS ORIGINAL SCALE IS IN INCHES 0 1 2 3

B1 (E) ELECTRICAL CIRCUITS
NOT TO SCALE

B2 (E) ELECTRICAL PANEL
NOT TO SCALE

PLAN NOTES:

1. ALL ELECTRICAL, LIGHTS, CONDUITS, AND WIRING ASSOCIATED WITH THE FRAME STRUCTURE BEING DEMOLISHED SHALL BE REMOVED AND DEMOLISHED UNLESS NOTED OTHERWISE.
2. DEMO (E) PARTITION WALL, ROOF, TILES AND FIXTURES. DEMO WORK SHALL INCLUDE REMOVAL, HAUL AND CLEANING.
3. PULL WIRE BACK TO SOURCE PANEL. CUT BACK CONDUIT TO NEAREST ROOF SUPPORT.
4. CUT AND CAP FIRE SPRINKLER LINES AT THE TOP OF DROP.
5. CUT AND CAP WATER LINES.
6. CUT DRAIN LINES MINIMUM 1' BELOW SOG AND PATCH WITH 3000 PSI OR GREATER GROUT. PROVIDE SMOOTH FINISH FLUSH WITH FLOOR SLAB.
7. SEE A45-502 FOR SCHEDULE FOR GLULAM COLUMNS.
8. DEMO (E) TEMPORARY FRAMED STRUCTURES. DEMO WORK SHALL INCLUDE REMOVAL, HAUL AND CLEANING. REMOVE OR GRIND SMOOTH ANY NAILS, PINS OR OTHER PROJECTIONS FROM FLOOR.
9. CUT AND CAP (5) FIRE SPRINKLER LINES DROPPED FROM CEILINGS AT THE MAIN LINES.
10. DEMO (E) FURRED WALL ALONG THE FULL WIDTH OF (E) PARTITION WALL AT GL 20.
11. CONTRACTOR SHALL CONFIRM EXISTING CONDITIONS AND NOTIFY ENGINEER OF ANY AND ALL DISCREPANCIES. EXISTING CONDITIONS ABOVE THE UNDERSIDE OF DECK HAVE NOT BEEN VERIFIED BY OWNER OR ENGINEER. INTENT IS TO MATCH EXISTING ROOF AND ROOFING MATERIALS. THE CONTRACTOR SHALL PREPARE AND SUBMIT A WORKPLAN FOR REMOVAL, INSTALLATION AND WORKER SAFETY PRIOR TO WORK BEING DONE ON REQUIRED PORTIONS OF ROOF AS STATED IN THE DRAWINGS

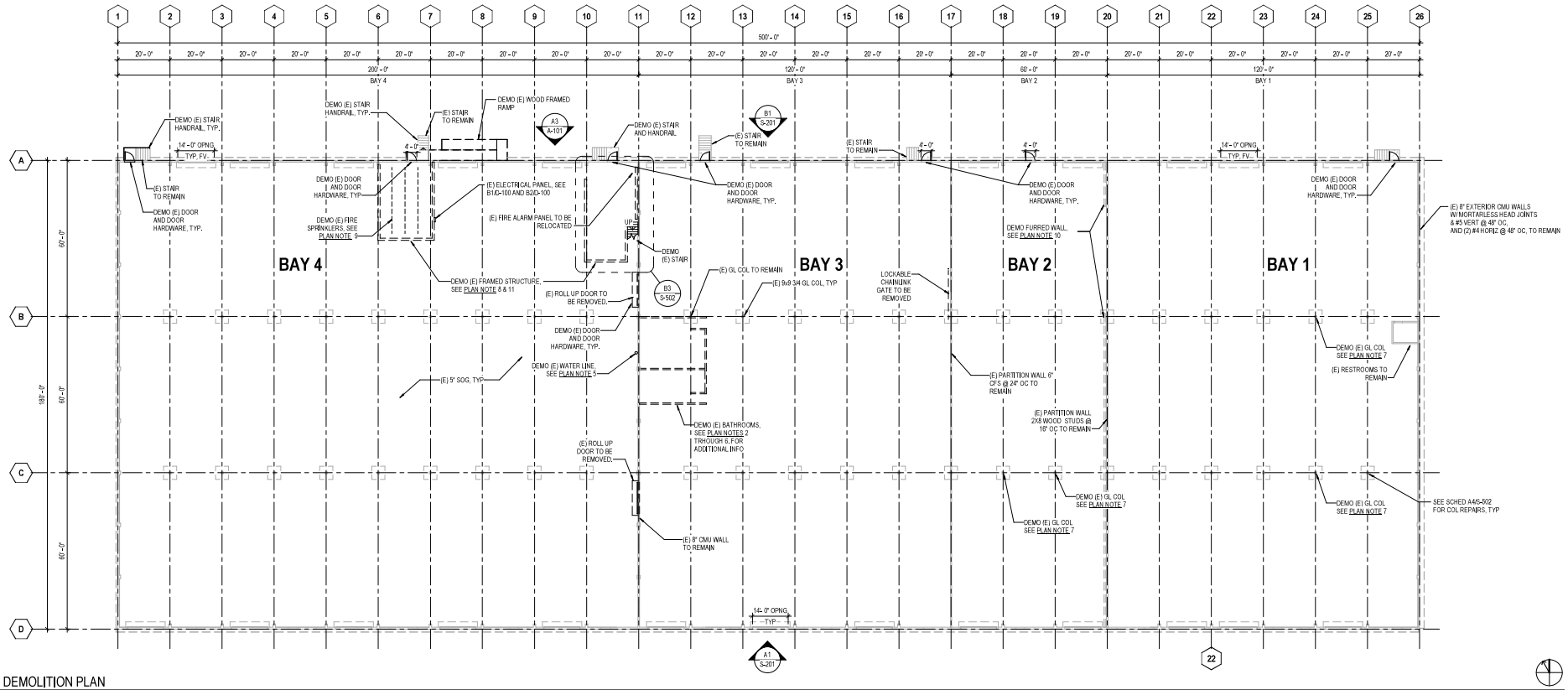

A1 DEMOLITION PLAN
1" = 20'-0"

NO.	DATE	REVISIONS	BY	CHK	APRV

HDR

REGISTERED PROFESSIONAL ENGINEER MARKT. HARPER No. S4387 ELECTRICAL STATE OF CALIFORNIA

DESIGNED BY P. DESAI	DATE 04/26
DRAWN BY P. DESAI	04/26
CHECKED BY M. HARPER	04/26
APPROVED BY N. CAPPADOCIA	04/26

MTS Metropolitan Transit System

PYRAMID BUILDING STRUCTURAL IMPROVEMENTS

OVERALL DEMOLITION PLAN

SCALE 1" = 20'-0"
CONTRACT NO. WO352-AE-27
DRAWING NO. D-100
SHEET NO. 10 OF 29

FOR REDUCED PLANS ORIGINAL SCALE IS IN INCHES 0 1 2 3

Door Schedule

MARK	HEIGHT	WIDTH	THICKNESS	FRAME TYPE	FRAME MATERIAL	FINISH	PANIC HARDWARE	HARDWARE SET (REFER TO SPEC)
1001	7' - 0"	3' - 6"	1 3/4"	F01	HM	PT	Yes	01
2001	7' - 0"	3' - 6"	1 3/4"	F01	HM	PT	Yes	01
3001	7' - 0"	3' - 6"	1 3/4"	F01	HM	PT	Yes	01
4001	7' - 0"	3' - 6"	1 3/4"	F01	HM	PT	Yes	01
3002	7' - 0"	3' - 6"	1 3/4"	F01	HM	PT	Yes	01
4002	7' - 0"	3' - 6"	1 3/4"	F01	HM	PT	No	01
4003	7' - 0"	3' - 6"	1 3/4"	F01	HM	PT	Yes	01
300	14' - 0"	12' - 0"	3 5/32"	F04	CD-FR	-	No	02
301	14' - 0"	12' - 0"	3 5/32"	F04	CD-FR	-	No	02

Set 1 – Single Exterior door, new HM door and frame

1 ea Continuous Hinge FM-300 Series x SS Marker
(Option: Butt type hinges- 3 ea T4A3386 5" x 4.5" x US32D x NRP (non-removable pin) McKinney)

1 ea Rim Exit Device, Nightlatch lever function 88LNL x US26D Von Duprin
(Option: Economical Rim Exit Device, Nightlatch lever function 22 LNL x 689 (powder coat aluminum) Von Duprin

1 ea Rim or Mortise Keyed Cylinder x 26D, type as required for lever trim
(coordinate any existing keying requirements with Owner and furnish make and model needed)

1 ea Surface Door Closer 4050A x Cush-N-Stop arm x 689 aluminum - LCN
x brackets/plate as needed, parallel arm mounted

1 ea Threshold 896N x SIA x Aluminum – National Guard Products

1 set Weatherstrip Gasketing 700NA, head and jambs – NGP

1 ea Sweep 200NAI – NGP

1 ea Rain Drip Guard 16A - NGP

SET 2- As above except Classroom Function lever lock instead of panic device

1 ea Classroom Function Cylindrical Lever Lock ND70 RHO x 626 – Schlage
(Option: Storeroom Function, always locked key side ND80 RHO x 626-Schlage)

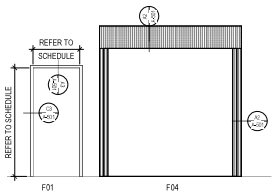

E3 INTERIOR FRAME LEGEND
1/4" = 1'-0"

Interior Frame Legend General Notes

1. Refer to Sheet A-501 for the relating head, jamb and sill details.

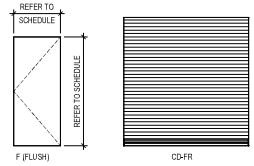

E4 INTERIOR PANEL LEGEND
1/4" = 1'-0"

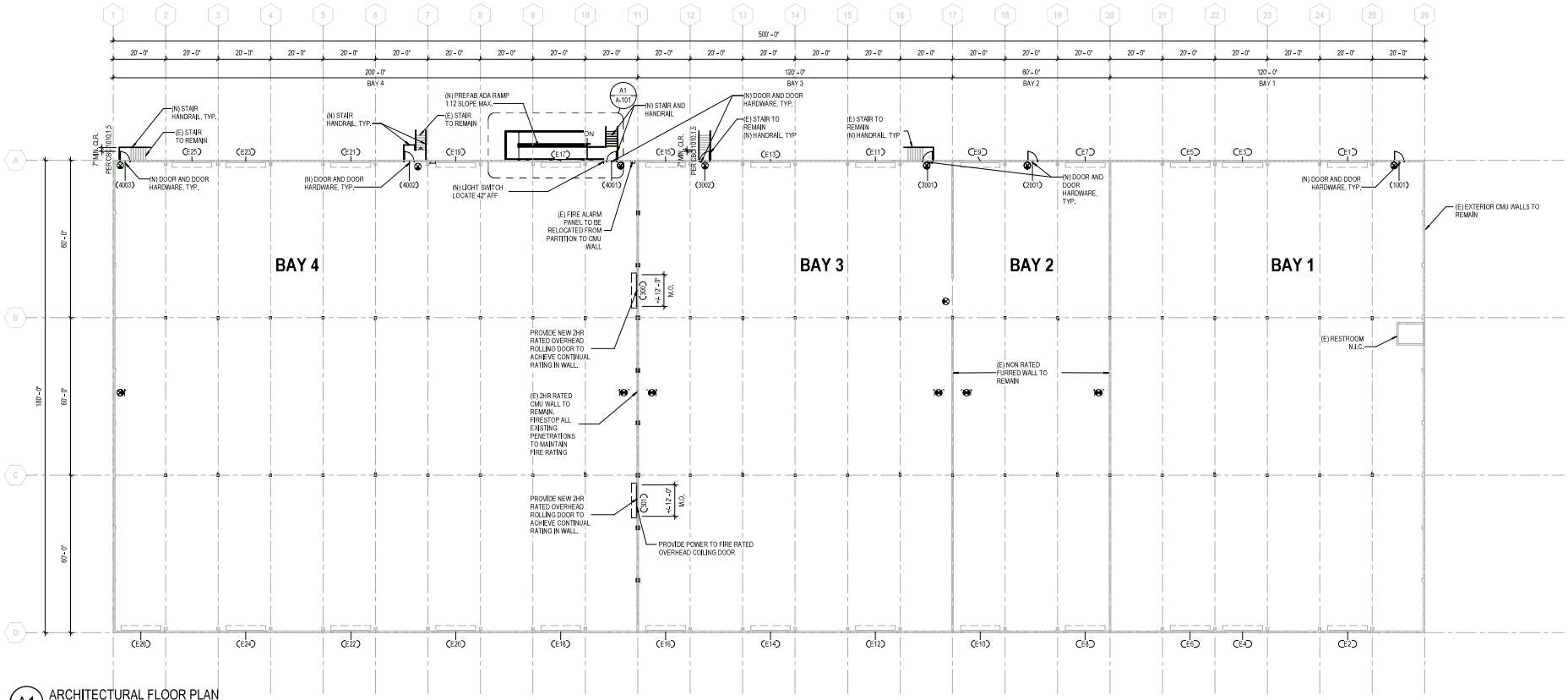

A1 ARCHITECTURAL FLOOR PLAN
1" = 20'-0"

NO.	DATE	REVISIONS	BY	CHK	APRV

HDR

LICENSED ARCHITECT OWEN STARKEY C-41803 REN. 04/30/27 STATE OF CALIFORNIA

DESIGNED BY	J.L. CHOW	04/26
DRAWN BY	O. STARKEY	04/26
CHECKED BY	M. HARPER	04/26
APPROVED BY	N. CAPPADOCIA	04/26

MTS Metropolitan Transit System

PYRAMID BUILDING STRUCTURAL IMPROVEMENTS

ARCHITECTURE OVERALL FLOOR PLAN

SCALE: NO SCALE
CONTRACT NO.: WO352-AE-27
DRAWING NO.: AS-100
SHEET NO.: 11 OF 29

FOR REDUCED PLANS
ORIGINAL SCALE IS IN INCHES 0 1 2 3

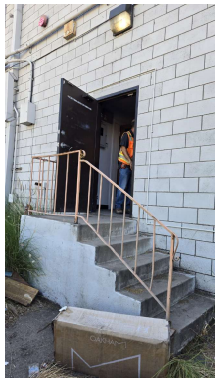

C1 PROPOSED ACCESSIBLE EXIT
NOT TO SCALE

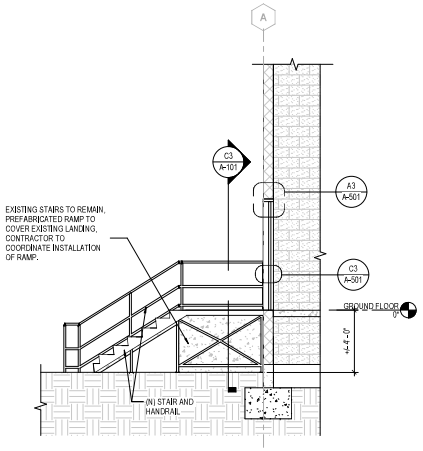

C2 SECTION - PRE-FABRICATED RAMP - EAST
1/4" = 1'-0"

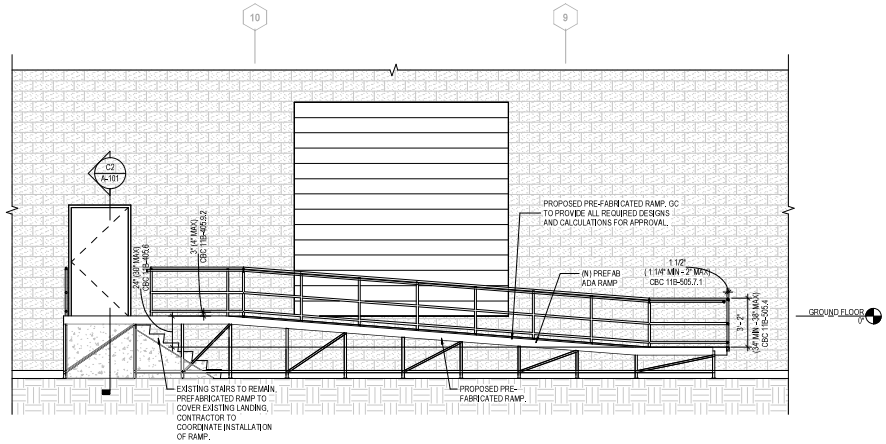

C3 SECTION - PRE-FABRICATED RAMP - SOUTH
1/4" = 1'-0"

1. CONTRACTOR TO VERIFY ALL EXISTING CONDITIONS, DIMENSIONS, ELEVATIONS PRIOR TO THE COMMENCEMENT OF WORK AND NOTIFY ENGINEER OF ANY AND ALL DISCREPANCIES.
2. CONTRACTOR SHALL REMOVE PORTIONS OF THE EXISTING CONCRETE AS REQUIRED TO ALLOW FOR INSTALLATION OF THE RAMP AND STAIRS.

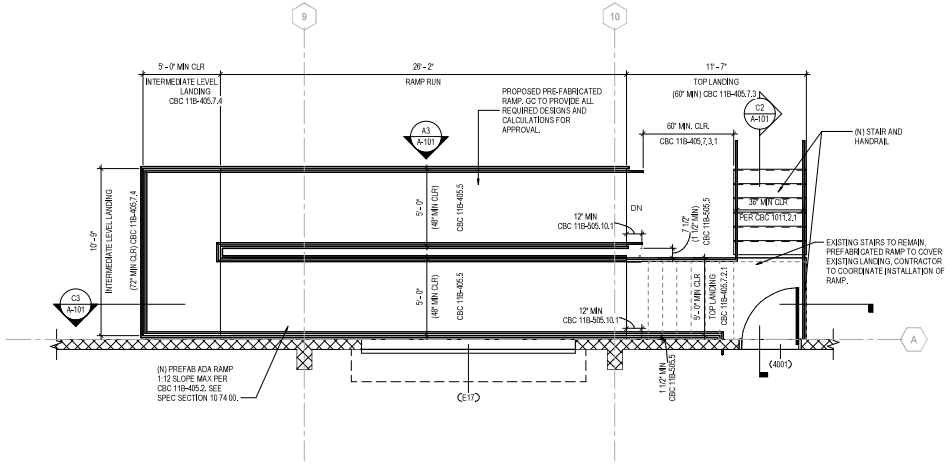

A1 ENLARGED ARCHITECTURAL FLOOR PLAN - PRE-FABRICATED RAMP
1/4" = 1'-0"

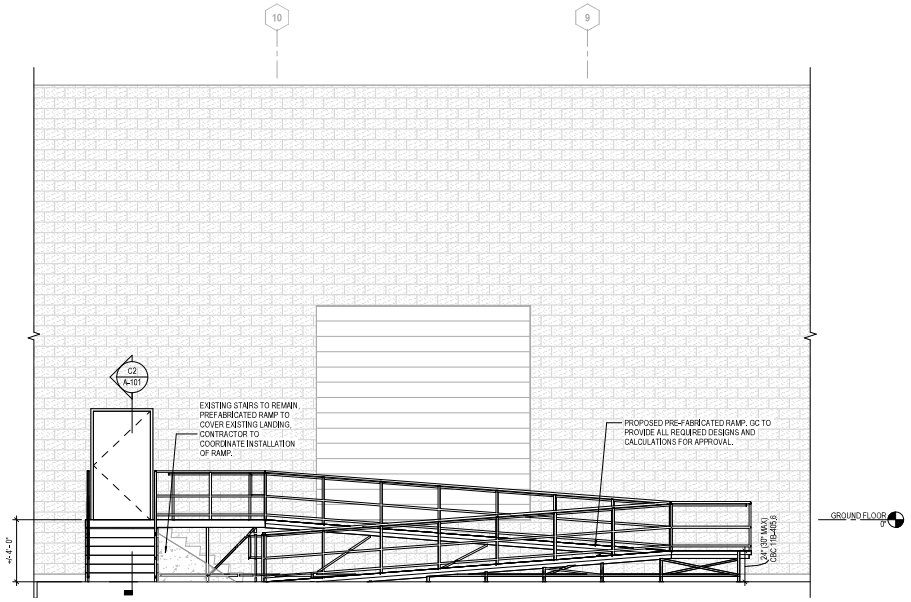

A3 ELEVATION - PRE-FABRICATED RAMP - SOUTH
1/4" = 1'-0"

NO.	DATE	REVISIONS	BY	CHK	APRV

HDR

LICENSED ARCHITECT OWEN STARKEY C-41803 REN. 04/30/27 STATE OF CALIFORNIA

DESIGNED BY	J. L. CHOW	04/26
DRAWN BY	O. STARKEY	04/26
CHECKED BY	M. HARPER	04/26
APPROVED BY	N. CAPPADOCIA	04/26

MTS Metropolitan Transit System

PYRAMID BUILDING STRUCTURAL IMPROVEMENTS

ARCHITECTURE PLAN - ENLARGED RAMP

SCALE	NO SCALE
CONTRACT NO.	WO352-AE-27
DRAWING NO.	A-101
SHEET NO.	12 OF 29

FOR REDUCED PLANS ORIGINAL SCALE IS IN INCHES 0 1 2 3

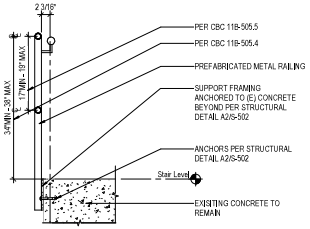

C1 GUARDRAIL SECTION @ LANDING
3/4" = 1'-0"

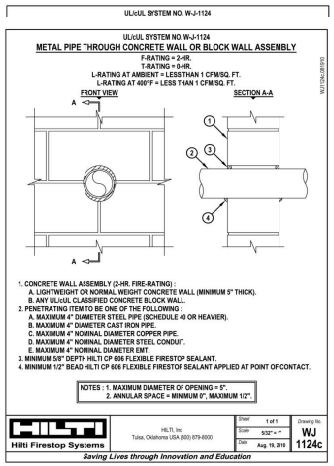

C2 FIRE STOPPING STANDARD DETAIL
12" = 1'-0"

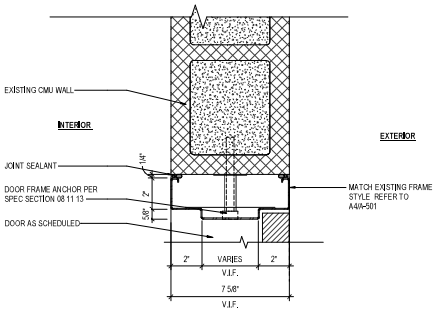

C3 EXTERIOR DOOR - JAMB
3" = 1'-0"

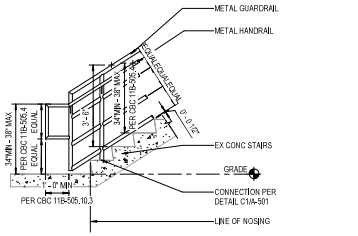

B1 STAIR @ BOTTOM LANDING
3/8" = 1'-0"

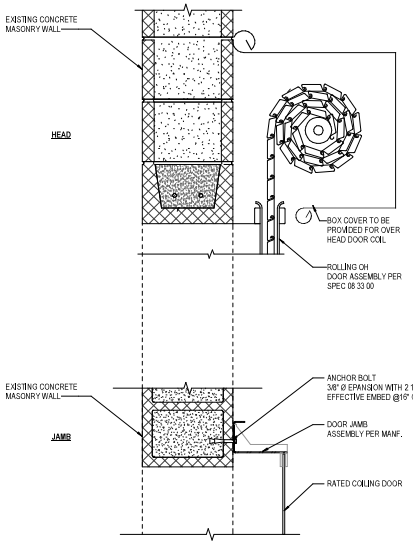

A2 TYP. OVERHEAD COILING DOOR HEAD AND JAMB DETAIL
1 1/2" = 1'-0"

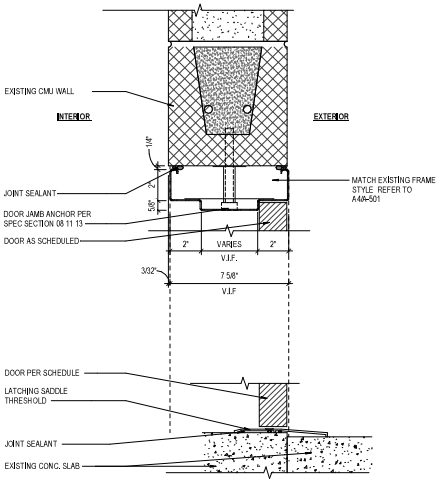

A3 EXTERIOR DOOR - HEAD AND SILL
3" = 1'-0"

B4 EXISTING DOOR AND FRAME CONDITION 01
1/4" = 1'-0"

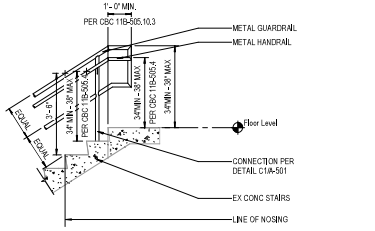

A1 STAIR @ TOP LANDING
3/8" = 1'-0"

A4 EXISTING DOOR AND FRAME CONDITION 02
1/4" = 1'-0"

NO.	DATE	REVISIONS	BY	CHK	APRV

HDR

LICENSED ARCHITECT OWEN STARKEY C-41803 REN. 04/30/27 STATE OF CALIFORNIA

DESIGNED BY J.L. CHOW	DATE 04/26
DRAWN BY O. STARKEY	04/26
CHECKED BY M. HARPER	04/26
APPROVED BY N. CAPPADOCIA	04/26

MTS Metropolitan Transit System

PYRAMID BUILDING STRUCTURAL IMPROVEMENTS

ARCHITECTURAL DETAILS

SCALE	NO SCALE
CONTRACT NO.	WO352-AE-27
DRAWING NO.	A-501
SHEET NO.	13 OF 29

FOR REDUCED PLANS ORIGINAL SCALE IS IN INCHES 0 1 2 3

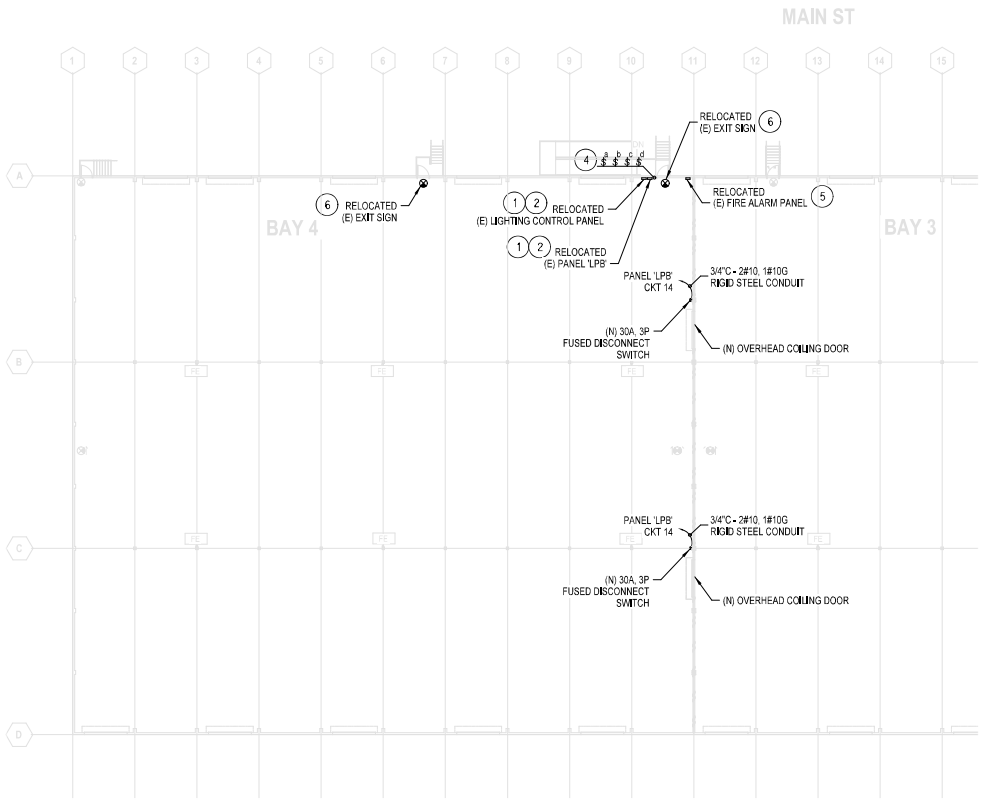

E1 — ELECTRICAL PLAN - PARTIAL FLOOR PLAN
SCALE: 1" = 20'-0"

(#) PLAN NOTES:

1. RELOCATE PANELBOARD 'LPB' AND LIGHTING CONTROL PANEL TO NEARBY CMU WALL AS SHOWN AND MOUNT MINIMUM 48" ABOVE FINISH FLOOR. EXTEND ALL EXISTING WIRING TO NEW LOCATION. PROVIDE NEW CONDUIT AND WIRING AS NECESSARY, MATCH EXISTING CONDUIT AND WIRING SIZE AND TYPE.
2. EXTEND ALL EXISTING CONDUITS TO NEW PANELBOARD & LIGHTING CONTROL PANEL LOCATION. FIELD VERIFY AND TRACE ALL EXISTING CIRCUITS AND PROVIDE A NEW, TYPED SCHEDULE FOR ALL CIRCUITS ON THE PANELBOARD.
3. CONSOLIDATE ALL EXISTING 'BAY 4' LIGHTING CIRCUITS INTO (4) CIRCUITS. EACH CIRCUIT SHALL NOT EXCEED 15A. CIRCUITS THAT EXCEED 15A SHALL BE MOVED TO AN ADDITIONAL LIGHTING CIRCUIT. ALL UNUSED BREAKERS FROM CONSOLIDATION SHALL BE DESIGNATED AS SPARE. LIGHTING CIRCUITS SHOWN IN THE SCHEDULE ARE REPRESENTATIVE ONLY. CONTRACTOR SHALL TRACE ALL EXISTING LIGHT CIRCUITS AND PROVIDE A REVISED PANEL SCHEDULE AS PART OF THE PROJECT SCOPE.
4. PROVIDE LIGHTING SWITCH FOR EACH OF THE (4) NEW LIGHTING CIRCUITS. MOUNT LIGHTING SWITCHES 4'-0" AFF. CONSOLIDATED LIGHTING CIRCUITS SHALL BE CONTROLLED FROM THESE LIGHTING SWITCHES. EXISTING WIRING MAY NOT SUPPORT THIS AND SHALL BE REWIRED AS NEEDED IN ORDER TO PROVIDE THIS CONTROL SCHEME.
5. RELOCATE EXISTING FIRE ALARM PANEL TO NEARBY CMU WALL AS SHOWN AND MOUNT MINIMUM 48" ABOVE FINISH FLOOR. EXTEND ALL EXISTING CONDUIT AND WIRING TO NEW LOCATION. PROVIDE NEW CONDUIT AND WIRING AS NECESSARY, MATCH EXISTING CONDUIT AND WIRING SIZE AND TYPE.
6. RELOCATE EXIT SIGN TO LOCATION SHOWN AND MOUNT MINIMUM 9" ABOVE TOP OF DOOR FRAME. EXTEND ALL EXISTING CONDUIT AND WIRING TO NEW LOCATION. PROVIDE NEW CONDUIT AND WIRING AS NECESSARY, MATCH EXISTING CONDUIT AND WIRING SIZE AND TYPE.

(3)

PANELBOARD NO:	(E) PANEL 'LPB'											ENCLOSURE:					
VOLTAGE:	120/208	BUS RATING (A):										MOUNTING:	WALL				
PHASE:	3	MAIN OC DEVICE (A/PHASE):										LOCATION:					
WIRE:	4+GND	INTERRUPTING RATING (KA):										FEED BY:					
200% NEUTRAL:		SERVICE ENTRANCE LABEL:															

CKT NO.	DESCRIPTION	CONNECTED LOAD (VA) LTS	REC	MECH	MISC	OCP AMPS	P		OCP AMPS	P	CONNECTED LOAD (VA) LTS	REC	MECH	MISC	DESCRIPTION	CKT NO.
1	LIGHTING					20	1	A	20	1					LIGHTING EMERGENCY	2
3	LIGHTING					20	1	B	20	1					FA FLOW BELL	4
5	LIGHTING					20	1	C	20	1					REC	6
7	**(N) LIGHTING**					20	1	A	20	1					REC BREAKROOM	8
9	**(N) LIGHTING**					20	1	B	20	1					REC BREAKROOM	10
11	**(N) LIGHTING**					20	1	C	20	1					REC BREAKROOM	12
13	**(N) LIGHTING**					20	1	A	20	1					**(N) OVERHEAD COILING DOOR**	**14**
15	**SPARE**					20	1	B	20	1					FC-1, FC-2, FC-3	16
17	**SPARE**					20	1	C	20	1					REC OFFICE	18
19	**SPARE**					20	1	A	20	1					REC OFFICE	20
21	**SPARE**					20	1	B	20	1					REC OFFICE	22
23	**SPARE**					20	1	C	20	1					REC OFFICE	24
25	**SPARE**					20	1	A	20	1					HANDICAP LIFT	26
27	**SPARE**					20	1	B	20	1					REC OUTSIDE	28
29	**SPARE**					20	1	C	20	2					CU-1	30
31	LIGHTING CONTROL					20	1	A								32
33	SERVER REC					20	1	B	20	1					DOCK LEVELER	34
35	SERVER REC					20	1	C	20	1					REC WORKSTATION	36
37	LIGHTING OFFICE					20	1	A								38
39 / 41	A.C. 3 UNIT					100	2	B / C	60	3					COMPRESSOR	40 / 42

LOAD SUMMARY

	LTS	REC	MECH	MISC	SPARE	TOTAL			PHASE BALANCE	
CONNECTED LOAD (KVA)	0.0	0.0	0.0	0.0	—	0.0	208	LINE-TO-LINE VOLTS	PHASE A (KVA)	0.0
DEMAND FACTOR	1.25	NEC	1.00	1.00	20%	—	0	CONNECTED AMPS	PHASE B (KVA)	0.0
DESIGN LOAD (KVA)	0.0	0.0	0.0	0.0	0.0	0.0	0	DESIGN AMPS	PHASE C (KVA)	0.0

NOTE:
EXISTING PANEL SCHEDULE SHOWN IS PROVIDED TO THE BEST AVAILABLE KNOWLEDGE BASED ON EXISTING SITE CONDITIONS. DEVIATIONS BETWEEN SCHEDULE AND FIELD MAY EXIST. CONTRACTOR SHALL TRACE ALL EXISTING CIRCUITS AND PROVIDE CORRECTIONS AS PART OF THE PROJECT SCOPE.

E2 — (E) PANEL SCHEDULE 'LPB'
NOT TO SCALE

NO.	DATE	REVISIONS	BY	CHK	APRV

HDR

REGISTERED PROFESSIONAL ENGINEER — ANDREW L. TEE — No. E20193 — ELECTRICAL — STATE OF CALIFORNIA

DESIGNED BY A. TEE	DATE 04/26
DRAWN BY J. R. FEN	04/26
CHECKED BY Y. P. SEE	04/26
APPROVED BY N. CAPPADOCIA	04/26

MTS Metropolitan Transit System

PYRAMID BUILDING
STRUCTURAL IMPROVEMENTS

ELECTRICAL PARTIAL FLOOR PLAN

SCALE	AS SHOWN
CONTRACT NO.	WOA352-AE-27
DRAWING NO.	E-001
SHEET NO.	14 OF 29

FOR REDUCED PLANS ORIGINAL SCALE IS IN INCHES 0 1 2 3

APPLICABLE CODES AND STANDARDS

1. CALIFORNIA BUILDING CODE, 2022 EDITION AND ALL LOCAL, STATE, AND FEDERAL AGENCIES HAVING JURISDICTION OVER THIS PROJECT.
2. AMERICAN CONCRETE INSTITUTE (ACI):
   a. ACI 318-19 BUILDING CODE REQUIREMENTS FOR STRUCTURAL CONCRETE
3. AMERICAN INSTITUTE OF STEEL CONSTRUCTION (AISC):
   a. AISC 360-16 SPECIFICATION FOR STRUCTURAL STEEL BUILDINGS
   b. 2014 RCSC SPECIFICATION FOR HIGH-STRENGTH BOLTS
   c. AISC 303-16 CODE OF STANDARD PRACTICE FOR STEEL BUILDINGS AND BRIDGES
   d. AISC 341-16 SEISMIC PROVISIONS FOR STRUCTURAL STEEL BUILDINGS
   e. AISC 358-16 W/ 358S1-18 PREQUALIFIED CONNECTIONS FOR SPECIAL AND INTERMEDIATE STEEL MOMENT FRAMES FOR SEISMIC APPLICATIONS
4. AMERICAN IRON AND STEEL INSTITUTE (AISI):
   a. AISI S100-16 NORTH AMERICAN SPECIFICATION FOR THE DESIGN OF COLD-FORMED STEEL STRUCTURAL MEMBERS
5. AMERICAN SOCIETY OF CIVIL ENGINEERS (ASCE):
   a. ASCE 7-16 MINIMUM DESIGN LOADS FOR BUILDINGS AND OTHER STRUCTURES
6. ASTM INTERNATIONAL (ASTM):
   a. ALL MATERIAL STANDARDS NOTED
7. AMERICAN WOOD COUNCIL (AWC):
   a. AWC NDS-2018 NATIONAL DESIGN SPECIFICATION FOR WOOD CONSTRUCTION WITH SUPPLEMENT
   b. AWC SDPWS-2021 SPECIAL DESIGN PROVISIONS FOR WIND AND SEISMIC
8. AMERICAN WELDING SOCIETY (AWS):
   a. AWS D1.1-2015 STRUCTURAL WELDING CODE - STEEL
   b. AWS D1.3-2008 STRUCTURAL WELDING CODE - SHEET STEEL
   c. AWS D1.4-2018 STRUCTURAL WELDING CODE - REINFORCING STEEL
   d. AWS D1.8-2016 STRUCTURAL WELDING CODE - SEISMIC SUPPLEMENT
10. THE MASONRY SOCIETY (TMS):
    a. TMS 402/602-16 BUILDING CODE REQUIREMENTS AND SPECIFICATION FOR MASONRY STRUCTURES

LATERAL DESIGN LOADS

1. WIND DESIGN DATA

ULTIMATE DESIGN WIND SPEED, Vult	96 mph
RISK CATEGORY	II
WIND EXPOSURE CATEGORY	C
INTERNAL PRESSURE COEFFICIENT	±0.18

2. EARTHQUAKE DESIGN DATA

RISK CATEGORY	II
SEISMIC IMPORTANCE FACTOR, Ie	1.0
MAPPED SPECTRAL RESPONSE ACCELERATION PARAMETERS	
Ss	1.564 g
S1	0.523 g
SITE CLASS	D (DEFAULT)
DESIGN SPECTRAL RESPONSE ACCELERATION PARAMETERS	
Sds	1.251 g
Sd1	0.638 g
SEISMIC DESIGN CATEGORY	D

MATERIALS OF CONSTRUCTION

1. NORMAL WEIGHT CONCRETE:
   ALL CONCRETE — f'c = 4.0 ksi
2. REINFORCING STEEL
   ASTM A615 GR 60 — Fy = 60 ksi
3. REINFORCING STEEL TO BE WELDED
   ASTM A706 GR 60 — Fy = 60 ksi
4. WELDED WIRE REINFORCING — ASTM A1064 — Fy = 70 ksi
5. STRUCTURAL STEEL

WIDE FLANGE AND TEE SHAPES	ASTM A992	Fy = 50 ksi
ANGLES AND CHANNELS	ASTM A572	Fy = 50 ksi
PLATES	ASTM A572	Fy = 50 ksi
HSS RECTANGULAR AND SQUARE	ASTM A500 GR C	Fy = 50 ksi
HSS ROUND	ASTM A500 GR C	Fy = 50 ksi
PIPE	ASTM A53 GR B	Fy = 35 ksi
BOLTS	ASTM F3125 GR F1852	Fu = 120 ksi
ANCHOR RODS	ASTM F1554 GR 36	Fy = 36 ksi

6. NON-SHRINK AND NON-METALLIC GROUT AT BASE/BRG PLATES
   AT 7 DAYS — f'c = 4,000 psi
   AT 28 DAYS — f'c = 8,000 psi

GENERAL CONSTRUCTION NOTES

1. STRUCTURAL DRAWINGS SHOULD NOT BE SCALED. PRINTED DIMENSIONS HAVE PRECEDENCE OVER SCALED DRAWINGS AND LARGE SCALE OVER SMALL.
2. ALL DRAWINGS AND SPECIFICATIONS ARE CONSIDERED TO BE A PART OF THE CONTRACT DOCUMENTS. STRUCTURAL DRAWINGS SHALL BE USED IN CONJUNCTION WITH THE ARCHITECTURAL AND ELECTRICAL DRAWINGS FOR LOCATION AND SIZE OF OPENINGS, DIMENSIONS, ETC. NOT INDICATED ON THE STRUCTURAL DRAWINGS. NO HOLES, NOTCHES, BLOCKOUTS, ETC. ARE ALLOWED IN STRUCTURAL MEMBERS UNLESS DETAILED ON THE STRUCTURAL DRAWINGS OR APPROVED BY THE STRUCTURAL ENGINEER.
3. THE CONTRACTOR SHALL VISIT THE SITE AND GET FAMILIAR WITH EXISTING CONDITIONS. CHECK AND VERIFY EXISTING DIMENSIONS AND TAKE ADDITIONAL MEASUREMENTS AS NEEDED. NOTIFY THE ARCHITECT OF ANY DISCREPANCY BETWEEN ACTUAL CONDITIONS AND INDICATED CONDITIONS. MODIFICATION OF DETAILS OF CONSTRUCTION SHALL NOT BE MADE WITHOUT WRITTEN APPROVAL OF THE ARCHITECT OR STRUCTURAL ENGINEER.
4. CONTRACTOR SHALL PROVIDE AND BE RESPONSIBLE FOR THE PROTECTION AND REPAIR OF ADJACENT EXISTING SURFACES AND AREAS WHICH MAY BE DAMAGED BY NEW WORK.
5. ALL COLUMNS AND FOUNDATIONS, UNLESS NOTED OTHERWISE, SHALL BE CENTERED ON GRIDLINES IN EACH DIRECTION. BEAMS SHALL BE EQUALLY SPACED BETWEEN COLUMN CENTERLINES UNLESS NOTED OTHERWISE.
6. TYPICAL DETAILS SHALL APPLY IN GENERAL CONSTRUCTION UNLESS SPECIFICALLY DETAILED. WHERE NO DETAILS ARE GIVEN, CONSTRUCTION SHALL BE AS SHOWN FOR SIMILAR WORK.
7. THE CONTRACTOR SHALL BE RESPONSIBLE FOR ADEQUATE DESIGN AND CONSTRUCTION OF ALL FORMS, SHORING AND TEMPORARY BRACING. THE CONTRACTOR SHALL PROVIDE ALL MEASURES NECESSARY TO PROTECT THE STRUCTURE AND SAFETY OF WORKERS DURING CONSTRUCTION.
   A. DO NOT PLACE CONSTRUCTION MATERIALS OR OTHER CONSTRUCTION LOADS ON THE STRUCTURE SUCH THAT THE LOADS PLACED EXCEED THE CAPACITY OF THE STRUCTURE.
   B. TAKE INTO CONSIDERATION THAT FULL STRUCTURAL CAPACITY OF MANY STRUCTURAL MEMBERS IS NOT REALIZED UNTIL STRUCTURAL ASSEMBLY IS COMPLETE; THAT IS, UNTIL SLABS, DECKS, DIAGONAL BRACING AND SHEAR WALLS ARE INSTALLED.
   C. PROVIDE TEMPORARY BRACING AND GUYING TO PROVIDE STABILITY AND RESIST ALL LOADS TO WHICH THE PARTIALLY COMPLETED STRUCTURE MAY BE SUBJECTED INCLUDING ERECTION EQUIPMENT AND ITS OPERATION. ADEQUACY OF TEMPORARY BRACING AND GUYING FOR THIS PURPOSE IS THE SOLE RESPONSIBILITY OF THE CONTRACTOR.

CONCRETE AND REINFORCING

1. REFER TO CONCRETE SPECIFICATIONS FOR ADDITIONAL INFORMATION ON CONCRETE MIXES.
2. LOCATION OF CONSTRUCTION JOINTS OR POUR JOINTS SHALL BE AS INDICATED ON APPROVED SHOP DRAWINGS.
3. ALL CONCRETE SHALL BE VIBRATED DURING PLACEMENT.
4. PROVIDE 3/4" CHAMFER ON ALL EXPOSED CONCRETE CORNERS.
5. NO STAKES, STEEL OR WOOD, SHALL BE PERMITTED IN ANY CONCRETE POUR. SUSPEND FORMS FROM ABOVE GRADE.
6. ANCHOR RODS, DOWELS, REINFORCING STEEL INSERTS, ETC, SHALL BE SECURELY TIED IN PLACE PRIOR TO POURING CONCRETE. CONCRETE BLOCKS ONLY SHALL BE USED TO SUPPORT REINFORCING OFF GRADE.
7. ALL REINFORCEMENT SHALL BE DETAILED, FABRICATED AND PLACED IN ACCORDANCE WITH ACI 315.
8. PROVIDE MINIMUM CONCRETE COVERING FOR REINFORCEMENT AS FOLLOWS:

CONDITION	CLR COVER
CONCRETE DEPOSITED AGAINST EARTH	3 IN.
FORMED SURFACES EXPOSED TO WEATHER OR IN CONTACT WITH EARTH:	
REINFORCING #6 OR LARGER	2 IN.
REINFORCING LESS THAN #6	1 1/2 IN.
FORMED SURFACES IN BUILDING INTERIOR:	
BEAMS, GIRDERS, AND COLUMNS	1 1/2 IN.
SLABS, WALLS AND JOISTS:	
REINFORCING #11 OR SMALLER	3/4 IN.
REINFORCING #14 AND #18	1 1/2 IN.

ADHESIVE ANCHORS AND DOWELS

1. REINFORCING BAR DOWELS, REINFORCING BARS, THREADED RODS, BOLTS, ETC WHICH ARE INDICATED AS ADHESIVE ANCHOR OR ADHESIVE DOWELS SHALL BE ACCOMPLISHED USING HILTI HIT-HY 200-R V3 INTO CONCRETE OR HIT-HY 270 FOR SOLID MASONRY (ICC ESR-4868 OR ESR-4143, RESPECTIVELY) OR APPROVED EQUAL.
2. DRILL, BRUSH, AND CLEAN ALL HOLES, AND INSTALL ALL ANCHORS IN COMPLETE ACCORDANCE WITH MANUFACTURER'S PUBLISHED RECOMMENDATIONS, AS WELL AS ALL APPLICABLE BUILDING CODES OR ENGINEERING REPORTS.
3. ADHESIVE ANCHORS AND DOWELS SHALL BE INSTALLED BY ACI CERTIFIED INSTALLERS.
4. ADHESIVE ANCHORS SHALL BE INSTALLED AND TESTED IN ACCORDANCE WITH THE ADHESIVE ANCHOR TEST SCHEDULE AND AS FOLLOWS:
   A. 25% OF THE FIRST 40 ANCHORS INSTALLED AND 10% OF ALL ANCHORS THEREAFTER.
   B. FOR OVERHEAD AND HORIZONTAL APPLICATIONS TEST 100% OF ALL ANCHORS.
   C. IF ANY FAILURES OCCUR, THE PREVIOUS 10 ANCHORS INSTALLED SHALL BE TESTED AS WELL AS THE NEXT 5 ANCHORS INSTALLED.
   D. ANCHORS SHALL BE ALLOWED TO CURE 48 HRS PRIOR TO TESTING.
   E. TENSION TEST SHALL BE IN ACCORDANCE WITH ASTM E1512.

ADHESIVE ANCHOR TEST SCHEDULE
ANCHORS INSTALLED IN 1WT CONCRETE — f'c = 2,500 psi MIN
BOLTS OR THREADED RODS — Fy = 36 ksi

ANCHOR DIAMETER	MIN EMBEDMENT	MIN EDGE DISTANCE	MIN ANCHOR SPACING	TENSION TEST LOAD[1,2]
3/8"	5"	2-1/2"	2"	2,232 LB
1/2"	7"	3"	2-1/2"	4,081 LB
5/8"	8"	3-1/2"	3-1/2"	6,509 LB
3/4"	10"	3-1/2"	4"	9,633 LB
7/8"	12"	3-1/2"	5"	13,296 LB
1"	13"	4"	5"	17,444 LB
1 1/4"	15"	5"	6-1/2"	27,910 LB

NOTE:
1. TEST LOADS NEED NOT EXCEED 80% OF THE NOMINAL YIELD STRENGTH OF THE ANCHOR ELEMENT.
2. ALLOWABLE LOADS EQUAL 1/2 TEST LOAD VALUE. TEST VALUES ONLY VALID WHEN MINIMUM SPACING AND EDGE DISTANCE IS MET.

EXPANSION ANCHORS

1. EXPANSION ANCHORS SHALL HAVE A CURRENT EVALUATION REPORT ISSUED BY AN APPROVED SOURCE IN ACCORDANCE WITH ACI 355.2. IN SEISMIC DESIGN CATEGORY C AND GREATER, THE EVALUATION REPORT SHALL INDICATE THE ANCHORS ARE QUALIFIED FOR EARTHQUAKE LOADING. ANCHORS SHALL BE HILTI KWIK BOLT TZ2 (ICC ES REPORTS ESR-4266) OR APPROVED EQUAL.
2. ANCHORS SHALL BE ZINC PLATED UNLESS SPECIFICALLY NOTED AS STAINLESS STEEL ON THE PLAN DETAILS, USE STAINLESS STEEL FOR ANCHORS EXPOSED TO WEATHER.
3. WHEN DETAILS OF SECTIONS INDICATE EXPANSION ANCHORS BUT NO SIZE, PROVIDE ANCHORS WITH 3/4" DIAMETER.
4. INSTALL ANCHORS IN ACCORDANCE WITH THE EVALUATION REPORT AND MANUFACTURER'S RECOMMENDATIONS. PROVIDE THE MINIMUM EMBEDMENT DEPTHS, SPACING, AND EDGE DISTANCE INDICATED IN THE SCHEDULE BELOW UNLESS NOTED OTHERWISE IN DOCUMENTS, CONSULT STRUCTURAL ENGINEER FOR DIRECTION WHEN SCHEDULE CANNOT BE MET.
5. WHEN INSTALLING DRILLED-IN-ANCHORS, USE CARE AND CAUTION TO AVOID CUTTING OR DAMAGING THE EXISTING REINFORCING BARS.
6. TEST INSTALLED ANCHORS IN ACCORDANCE WITH THE ANCHOR SCHEDULE AND AS FOLLOWS:
   A. EXPANSION ANCHORS SHALL BE TESTED WITH A CALIBRATED TORQUE WRENCH THE TORQUE LISTED BELOW SHALL BE OBTAINED WITHIN HALF TURN OF THE NUT.
   B. TESTING SHALL BE DONE IN THE PRESENCE OF THE SPECIAL INSPECTOR. ANCHORS TESTED SHALL BE SELECTED AT RANDOM BY THE SPECIAL INSPECTOR. THE TESTING FREQUENCY SHALL BE AS FOLLOWS:
      a. 100% OF ALL ANCHORS USED FOR STRUCTURAL APPLICATIONS.
      b. 50% OF ANCHORS OR ALTERNATE BOLTS IN A GROUP USED FOR NON-STRUCTURAL APPLICATIONS SUCH AS EQUIPMENT ANCHORAGE. INCLUDE AT LEAST ONE-HALF THE ANCHORS IN EACH GROUP.
      c. 10% OF ANCHORS USED FOR SILL PLATE ANCHORING.
      d. 10% OF ANCHORS WHERE THE FACTORED DESIGN TENSION LOAD IS LESS THAN 100# AND IS CLEARLY IDENTIFIED ON THE PLANS OR DETAIL.
   C. TEST EQUIPMENT SHALL BE CALIBRATED BY AN APPROVED TESTING LABORATORY IN ACCORDANCE WITH STANDARD RECOGNIZED PROCEDURES.

EXPANSION ANCHOR SCHEDULE

THE FOLLOWING SCHEDULES ARE FOR REFERENCE ON MINIMUM REQUIREMENTS AND TESTING FOR EXPANSION ANCHORS. EXPANSION ANCHORS SHALL NOT BE USED UNLESS EXPLICITLY NOTED IN THE CONTRACT DOCUMENTS OR DIRECTED BY THE STRUCTURAL ENGINEER OF RECORD.

KWIK BOLT TZ2 ANCHOR SCHEDULE
ANCHORS INSTALLED IN CONCRETE — f'c = 2,500 psi MIN

ANCHOR DIAMETER	MIN EFFECTIVE EMBEDMENT	MIN EDGE DISTANCE	MIN SPACING	TEST TORQUE
3/8"	2"	2"	2 1/4"	30 LB-FT
1/2"	3 1/4"	2 1/4"	2"	50 LB-FT
5/8"	4"	2 3/4"	2 1/4"	40 LB-FT
3/4"	4 3/4"	3 1/2"	3 3/4"	110 LB-FT

NOTE:
1. CONSULT SEOR FOR DIRECTION WHEN MINIMUM EDGE DISTANCE AND SPACING CANNOT BE OBTAINED.

WOOD

1. ALL LUMBER SHALL BE GRADED BY AN AGENCY CERTIFIED BY THE AMERICAN LUMBER STANDARDS COMMITTEE. AT TIME OF CONSTRUCTION, MOISTURE CONTENT NOT TO EXCEED 19%.
2. WOOD SHALL BE GRADE MARKED DOUGLAS FIR OR WESTERN LARCH AND AS FOLLOWS:

a. HORIZONTAL FRAMING	NO. 1
b. STUDS	NO. 1
c. SILLS AND BLOCKING	NO. 2
d. POSTS AND COLUMNS	NO. 1
e. LINTELS AND BEAMS	NO. 1

3. ALL PRESSURE TREATED LUMBER SHALL BE MARKED PER AWPA STANDARD U1 AND MEET OR EXCEED WATERBORNE PRESERVATIVES WITH RETENTION OF 0.25 PCF FOR ABOVE GROUND AND 0.40 PCF FOR SOIL AND GROUND CONTACT USE.
4. ALL WOOD IN CONTACT WITH CONCRETE SHALL BE PRESERVATIVE-TREATED. ALL BOLTS IN CONTACT WITH PRESSURE TREATED WOOD TO BE HOT DIPPED GALVANIZED.
5. PLYWOOD SHEATHING SHALL BE DOUGLAS FIR PLYWOOD, 5 PLY, STRUCTURAL 1, CONFORMING TO DOC PS1 OR PS2. ALL PLYWOOD SHALL BE GRADE MARKED "DFPA STRUCTURAL 1, EXPOSURE 1.
6. PLYWOOD NAILING SHALL BE APPROVED BY THE INSPECTOR AND STRUCTURAL ENGINEER OR ARCHITECT, PRIOR TO COVERING UP.
7. FRAMING HARDWARE SHALL BE AS MANUFACTURED BY SIMPSON STRONG TIE OR APPROVED EQUAL. FASTENERS TO BE FURNISHED BY THE MANUFACTURER AND ALL HOLES TO BE FILLED.
8. MACHINE APPLIED NAILING IS SUBJECT TO A SATISFACTORY JOBSITE DEMONSTRATION FOR EACH PROJECT AND THE APPROVAL BY THE STRUCTURAL ENGINEER OR ARCHITECT. THE APPROVAL IS SUBJECT TO CONTINUED SATISFACTORY PERFORMANCE. IF NAIL HEADS PENETRATE THE OUTER PLY MORE THAN WOULD BE NORMAL FOR A HAND HAMMER, OR IF MINIMUM ALLOWABLE EDGE DISTANCES ARE NOT MAINTAINED, THE PERFORMANCE WILL BE DEEMED UNSATISFACTORY.
9. PROVIDE PLATE WASHERS UNDER ALL BOLTS NUTS AND HEADS.
10. RETIGHTEN BOLTS PRIOR TO CLOSING IN.
11. ALL NAILING SHALL CONFORM TO TABLES SET FORTH IN CHAPTER 23 OF THE BUILDING CODE EXCEPT AT SPECIFICALLY DETAILED CONNECTIONS, USE ONLY COMMON NAILS.
12. ALL FRAMING MEMBERS SHALL BE ERECTED WITH NATURAL OR BUILT IN CAMBER UP UNLESS NOTED OTHERWISE.

STRUCTURAL STEEL

1. STEEL FRAMING DESIGNATIONS AND SYMBOLS ARE DEFINED IN THE STRUCTURAL STEEL SYMBOL LEGEND.
2. ALL FIELD BOLTED SHEAR CONNECTIONS SHALL BE MADE WITH F1852 BOLTS, UNLESS NOTED OTHERWISE. ALL BOLTS SHALL BE FULLY PRETENSIONED AND INSPECTED USING TENSION CONTROL TWIST-OFF STYLE BOLTS, UNLESS SPECIFICALLY INDICATED AS SLIP CRITICAL OR PRETENSIONED. ALL JOINTS SHALL BE DESIGNATED AS SNUG TIGHT. ROUTINE OBSERVATION TO VERIFY THE SPLINED ENDS ARE PROPERLY SEVERED DURING INSTALLATION IS REQUIRED FOR ALL BOLTS.
3. CANTILEVER BEAM SIZE MATCHES MAIN SPAN BEAM SIZE UNLESS NOTED OTHERWISE.
4. PLACE NON-SHRINK GROUT UNDER ALL COLUMN BASE PLATES BEFORE PLACING ANY ELEVATED CONCRETE LEVELS.
5. WHERE THE WORK OF OTHER TRADES REQUIRES CUTS OR OPENINGS TO BE MADE IN STRUCTURAL STEEL MEMBERS, APPROVAL SHALL BE OBTAINED FROM THE ENGINEER. SUCH OPENINGS SHALL BE MADE IN THE SHOP AND CLEARLY INDICATED ON THE SHOP DRAWING.
6. ALL HSS AND PIPE WITH OPEN ENDS SHALL BE CAPPED WITH A 1/4" THICK PLATE OF THE SAME CROSS SECTION, FULLY WELDED AND GROUND SMOOTH, UNLESS NOTED OTHERWISE. PROVIDE WEEP HOLES IF SLOTS OR OTHER OPENINGS WOULD ALLOW WATER TO ENTER CAPPED MEMBERS.
7. ALL WELDERS MUST BE QUALIFIED IN THE PROCESS USED AND AWS CERTIFIED.
8. WELD LENGTHS CALLED FOR ON THE PLANS ARE THE NET EFFECTIVE LENGTH REQUIRED. WHERE FILLET WELD SYMBOLS IS GIVEN WITHOUT INDICATION OF SIZE, USE MINIMUM SIZE WELDS AS SPECIFIED BY AISC OR 3/16", WHICH EVER IS GREATER.
9. ALL GROOVE WELDS INDICATED ON PLANS AND SECTIONS SHALL BE COMPLETE JOINT PENETRATION (CJP) WELDS UNLESS SPECIFICALLY INDICATED TO BE PARTIAL JOINT PENETRATION (PJP) WELDS.
10. E70XX ELECTRODES SHALL BE USED FOR ALL WELDING.
11. ALL SHOP AND FIELD WELDS SHALL BE PREQUALIFIED WELDS. ANY WELDS BEYOND THE RANGE OR TOLERANCE OR REQUIREMENTS FOR PREQUALIFICATION SHALL BE QUALIFIED BY TEST PER AWS D1.1 CLAUSE 4 PART B. WELDS AT BASE METALS OVER 2" IN THICKNESS ARE NOT ALLOWED AS PREQUALIFIED WELD JOINTS WITHOUT TESTING.
12. ALL STEEL EXPOSED TO WEATHER SHALL BE HOT-DIPPED GALVANIZED.

NO.	DATE	REVISIONS	BY	CHK	APRV

HDR

REGISTERED PROFESSIONAL ENGINEER — MARK F. HARPER — No. S4387 — EXPIRATION — STATE OF CALIFORNIA

DESIGNED BY P. DESAI	DATE 04/26
DRAWN BY P.DESAI	04/26
CHECKED BY M. HARPER	04/26
APPROVED BY N. CAPPADOCIA	04/26

MTS Metropolitan Transit System

PYRAMID BUILDING STRUCTURAL IMPROVEMENTS

STRUCTURAL GENERAL NOTES

SCALE: NO SCALE
CONTRACT NO.: WO352-AE-27
DRAWING NO.: S-001
SHEET NO.: 15 OF 29

FOR REDUCED PLANS
ORIGINAL SCALE IS IN INCHES — 0 1 2 3

SPORTBILS
SPOTORILS

SPATE: 4/2/2026 8:45:31 AM
FILE: I:\Asset Mgmt\Structural\MTS\Pyramid_Building_Improv_2026\WO352\MTS_Pyramid_Building_Improv_Structural.rvt

SCHEDULE OF SPECIAL INSPECTION SERVICES

INSPECTION ITEM REQUIRED	FREQUENCY PERFORM	FREQUENCY OBSERVE	SPECIFICATION SECTION	CODE REFERENCE	REMARKS
STRUCTURAL STEEL					
VISIT FABRICATION SHOP TO OBSERVE FABRICATION PROCEDURES.		●		IBC 1705.2	ONLY ONE INSPECTION IS REQUIRED UNLESS ON-SITE EVENTS INDICATE FURTHER INSPECTIONS ARE NECESSARY
VERIFY FABRICATOR CERTIFICATION		●	SEC 05 12 10 PAR 1.2	IBC 1704.2 IBC 1705.2 AISC 360 N5	
VERIFY CORRECT STRUCTURAL STEEL MATERIAL DELIVERED TO JOB SITE.		●	SEC 05 12 10	AISC 360 N5.2	
VERIFY MATERIALS CONFORM TO ASTM STANDARDS SPECIFIED IN THE CONSTRUCTION DOCUMENTS		●	SEC 05 12 10	IBC 1706.1 AISC 360 N5.2	
INSPECT FABRICATED AND ERECTED STEEL FRAME DETAILS FOR COMPLIANCE WITH APPROVED CONTRACT DOCUMENTS		●		AISC 360 N5.8	INCLUDES BRACES, STIFFENERS, MEMBER LOCATIONS AND PROPER APPLICATION OF JOINT DETAILS AT EACH CONNECTION
INSPECT ANCHOR ROD TYPE, SIZE, LENGTH AND PLACEMENT LOCATION PRIOR TO ANY CONCRETE PLACEMENT		●		AISC 360 N5.8	
OBSERVE AND TEST ALL FIELD APPLIED HEADED STUDS		●	SEC 05 12 10 PAR 2.2.A.12	AWS D1.1	VERIFY CORRECT NUMBER, LOCATION, AND WELDING
INSPECT AND DOCUMENT PROTECTED ZONES FOR HOLES AND UNAPPROVED ATTACHMENTS	●			AISC 341 TABLE J6.1	INSPECTION SHALL BE DONE FOLLOWING THE COMPLETION OF WORK DONE BY OTHERS, INCLUDING CURTAINWALL, MEP, INTERIOR FIT OUT, ETC.
INSPECTION TASKS PRIOR TO WELDING:					
WELDING PROCEDURE SPECIFICATIONS (WPS) AVAILABLE	●			AISC 360 TABLE N5.4-1 AWS D1.1	
MANUFACTURER'S CERTIFICATIONS FOR WELDING CONSUMABLES AVAILABLE	●				INCLUDES ELECTRODES, FLUXES AND SHIELDING GASES. DEMAND CRITICAL WELDS SHALL HAVE FILLER MATERIALS THAT MEET NOTCH TOUGHNESS REQUIREMENTS.
MATERIAL IDENTIFICATION (TYPE/GRADE)		●			
WELDER IDENTIFICATION SYSTEM		●			FABRICATOR OR ERECTOR SHALL MAINTAIN A SYSTEM BY WHICH A WELDER WHO HAS WELDED A JOINT OR MEMBER CAN BE IDENTIFIED.
FIT UP OF GROOVE WELDS (INCLUDING JOINT GEOMETRY), JOINT PREPARATION, DIMENSIONS (ALIGNMENT, ROOT OPENING, ROOT FACE, BEVEL), CLEANLINESS (CONDITION OF STEEL SURFACES), TACKING (TACK WELD QUALITY AND LOCATION), AND BACKING TYPE AND FIT (IF APPLICABLE)		●			
FIT UP OF CJP GROOVE WELDS OF HSS T- Y- AND K-JOINTS WITHOUT BACKING (INCLUDING JOINT GEOMETRY), JOINT PREPARATIONS, DIMENSIONS (ALIGNMENT, ROOT OPENING, ROOT FACE, BEVEL), CLEANLINESS (CONDITION OF STEEL SURFACES), TACKING (TACK WELD QUALITY AND LOCATION),	●				
CONFIGURATION AND FINISH OF ACCESS HOLES		●			
FIT UP OF FILLET WELDS INCLUDING DIMENSIONS (ALIGNMENT, GAPS AT ROOT), CLEANLINESS (CONDITION OF STEEL SURFACES), AND TACKING (TACK WELD QUALITY AND LOCATION)		●			
INSPECTION TASKS DURING WELDING:					
USE OF QUALIFIED WELDERS		●		AISC 360 TABLE N5.4-2 AWS D1.1	WELDERS MUST BE CERTIFIED UNDER AWS QUALIFICATION PROCEDURES
CONTROL AND HANDLING OF WELDING CONSUMABLES (PACKAGING, EXPOSURE CONTROL)		●			
NO WELDING OVER CRACKED TACK WELDS		●			
ENVIRONMENTAL CONDITIONS (WIND SPEED WITHIN LIMITS, PRECIPITATION & TEMPERATURE)		●			
WPS FOLLOWED FOR SETTINGS ON WELDING EQUIPMENT, TRAVEL SPEED, SELECTED WELDING MATERIALS, SHIELDING GAS TYPE/FLOW RATE, PREHEAT APPLIED, INTERPASS TEMPERATURE MAINTAINED, AND PROPER POSITION (F, V, H, OH)		●			
WPS FOLLOWED FOR INTERMIX OF FILLER METALS AVOIDED UNLESS APPROVED		●		AISC 341 TABLE J6.2	
WELDING TECHNIQUES INCLUDING INTERPASS AND FINAL CLEANING; EACH PASS WITHIN PROFILE LIMITATIONS, AND EACH PASS MEETS QUALITY REQUIREMENTS		●		AISC 360 TABLE N5.4-2 AWS D1.1	

SCHEDULE OF SPECIAL INSPECTION SERVICES

INSPECTION ITEM REQUIRED	FREQUENCY PERFORM	FREQUENCY OBSERVE	SPECIFICATION SECTION	CODE REFERENCE	REMARKS
STRUCTURAL STEEL					
INSPECTION TASKS AFTER WELDING:					
WELDS CLEANED		●		AISC 360 TABLE N5.4-3 AWS D1.1	WELDED JOINTS SHALL NOT BE PAINTED OR COVERED UNTIL AFTER WELDING IS COMPLETED AND WELD ACCEPTED
SIZE, LENGTH AND LOCATION OF WELDS	●				PROVIDE CONTINUOUS INSPECTION ON ALL WELDS
WELDS MEET VISUAL ACCEPTANCE CRITERIA INCLUDING CRACK PROHIBITION, WELD - BASE METAL FUSION, CRATER CROSS SECTION, WELD PROFILE, WELD SIZE, UNDERCUT AND POROSITY	●				VISUALLY INSPECT ALL WELDS WITHIN THE ALLOWABLE TIME OF INSPECTION. DOCUMENT ALL ACTIVITIES OF STEEL SFRS
ARC STRIKES	●				CRACKS OR BLEMISHES CAUSED BY ARC STRIKES SHALL BE GROUND TO A SMOOTH CONTOUR AND CHECKED TO ENSURE SOUNDNESS
K-AREA	●				WHEN WELDING DOUBLER PLATES, CONTINUITY PLATES OR STIFFENERS IN THE K-AREA, VISUALLY INSPECT WEB K-AREA FOR CRACKS WITHIN 3 INCHES OF WELD
WELD ACCESS HOLES IN ROLLED HEAVY SHAPES AND BUILT-UP HEAVY SHAPES	●				AFTER ROLLED HEAVY SHAPES AND BUILT-UP HEAVY SHAPES ARE WELDED, VISUALLY INSPECT THE WELD ACCESS HOLE FOR CRACKS
BACKING REMOVED, WELD TABS REMOVED AND FINISHED, AND FILLET WELDS ADDED (IF REQUIRED)	●				DOCUMENT ALL ACTIVITIES OF STEEL SFRS
REPAIR ACTIVITIES	●				DOCUMENT ALL ACTIVITIES OF STEEL SFRS
PLACEMENT OF REINFORCING OR CONTOURING FILLET WELDS (IF REQUIRED)	●			AISC 341 TABLE J6.3	DOCUMENT ALL ACTIVITIES OF STEEL SFRS
DOCUMENT ACCEPTANCE OR REJECTION OF EACH WELDED JOINT OR MEMBER	●				
NONDESTRUCTIVE TESTING OF WELDS:					
PERFORM ULTRASONIC TESTING ON ALL FULL PENETRATION GROOVE WELDS IN MATERIALS 5/16" THICK OR GREATER	●			AISC 360 N5.5	REDUCE TESTING TO 10% OF WELDS FOR STRUCTURES IN RISK CATEGORY II
PERFORM MAGNETIC PARTICLE TESTING OR PENETRANT TESTING ON ALL THERMALLY CUT SURFACES OF WELD ACCESS HOLES WHEN STEEL THICKNESS EXCEEDS 2 INCHES.	●			AISC 360 N5.5	STEEL THICKNESS TO BE CONSIDERED INCLUDES FLANGE OF ROLLED SHAPES AND WEBS OF BUILT UP SHAPES.
DOCUMENT ALL NONDESTRUCTIVE TESTING	●			AISC 360 N5.5	FOR BOTH SHOP AND FIELD WELDS, IDENTIFY PIECE MARK, TYPE OF WELD TESTED AND LOCATION IN THE PIECE.
PERFORM MAGNETIC PARTICLE TESTING IN THE K-AREA OF ELEMENTS PART OF THE SFRS	●			AISC 341 J6.2a	WHEN WELDING DOUBLER PLATES, CONTINUITY PLATES OR STIFFENERS IN THE K-AREA, CONDUCT TEST IN WEB K-AREA FOR CRACKS WITHIN 3 INCHES OF WELD, TEST SHALL BE PERFORMED NO SOONER THAN 48 HOURS FOLLOWING COMPLETION OF WELDING
PERFORM MAGNETIC PARTICLE TESTING ON AT LEAST 25% OF ALL BEAM-TO-COLUMN FULL PENETRATION GROOVE WELDS	●			AISC 341 J6.2a	
PERFORM ULTRASONIC TESTING ON ALL FULL PENETRATION GROOVE WELDS IN MATERIALS 5/16" THICK OR GREATER	●			AISC 341 J6.2a	NO REDUCTION PERMITTED FOR DEMAND CRITICAL WELDS
PERFORM ULTRASONIC TESTING ON FULL PENETRATION GROOVE WELDS IN TEE AND CORNER JOINTS	●			AISC 341 J6.2c	
PERFORM MAGNETIC PARTICLE TESTING OR PENETRANT TESTING ON ALL THERMALLY CUT SURFACES OF WELD ACCESS HOLES WHEN STEEL THICKNESS EXCEEDS 1.5 INCHES.	●			AISC 341 J6.2d	STEEL THICKNESS TO BE CONSIDERED INCLUDES FLANGE OF ROLLED SHAPES AND WEBS OF BUILT UP SHAPES OF MEMBERS PART OF THE SFRS.
AT BEAM TO COLUMN JOINTS REQUIRING ULTRASONIC TESTING PER AISC 341, PERFORM MAGNETIC PARTICLE TESTING AT ENDS OF WELDS WHERE WELD TABS ARE REMOVED.	●			AISC 341 J6.2f	
INSPECTION TASKS PRIOR TO BOLTING:					
MANUFACTURER'S CERTIFICATIONS FOR FASTENER MATERIALS AVAILABLE	●			AISC 360 TABLE N5.6-1	
FASTENERS MARKED IN ACCORDANCE WITH ASTM REQUIREMENTS		●			
CORRECT FASTENERS SELECTED FOR THE JOINT DETAIL (GRADE, TYPE, BOLT LENGTH IF THREADS TO BE EXCLUDED FROM SHEAR PLANE)		●			
CORRECT BOLTING PROCEDURE SELECTED FOR JOINT DETAIL		●			
CONNECTING ELEMENTS, INCLUDING THE APPROPRIATE FAYING SURFACE CONDITION AND HOLE PREPARATION, IF SPECIFIED, MEET APPLICABLE REQUIREMENTS		●			
PROTECTED STORAGE PROVIDED FOR BOLTS, NUTS, WASHERS AND OTHER FASTENER COMPONENTS		●			
PRE-INSTALLATION VERIFICATION TESTING BY INSTALLATION PERSONNEL OBSERVED FOR FASTERNER ASSEMBLIES AND METHODS USED		●		AISC 360 TABLE N5.6-1 AISC 341 TABLE J7-1	DOCUMENT ALL ACTIVITIES OF STEEL SFRS

SCHEDULE OF SPECIAL INSPECTION SERVICES

INSPECTION ITEM REQUIRED	FREQUENCY PERFORM	FREQUENCY OBSERVE	SPECIFICATION SECTION	CODE REFERENCE	REMARKS
STRUCTURAL STEEL					
INSPECTION TASKS DURING BOLTING:					
FASTENER ASSEMBLIES, OF SUITABLE CONDITION, PLACED IN ALL HOLES AND WASHERS (IF REQUIRED) ARE POSITIONED AS REQUIRED		●		AISC 360 TABLE N5.6-2	
JOINT BROUGHT TO THE SNUG TIGHT CONDITION PRIOR TO THE PRETENSIONING OPERATION		●			
FASTENER COMPONENT NOT TURNED BY THE WRENCH PREVENTED FROM ROTATING		●			
FASTENERS ARE PRETENSIONED IN ACCORDANCE WITH THE RCSC SPECIFICATION, PROGRESSING SYSTEMATICALLY FROM THE MOST RIGID POINT TOWARD THE FREE EDGES		●			
INSPECTION TASKS AFTER BOLTING:					
DOCUMENT ACCEPTANCE OR REJECTION OF BOLTED CONNECTIONS	●			AISC 360 TABLE N5.6-3 AISC 341 TABLE J7-1	DOCUMENT ALL ACTIVITIES OF STEEL SFRS
SPRAY FIRE RESISTANT MATERIAL					
INSPECT SURFACE PREPARATION OF MEMBERS,RECORD AMBIENT TEMPERATURES, AND VENTILATION MEASURES		●		IBC 1705.15.1 IBC 1705.15.2 IBC 1705.15.3	VERIFY CONDITIONS ARE IN CONFORMANCE WITH MANUFACTURERS WRITTEN INSTRUCTIONS
MEASURE APPLIED THICKNESS		●		IBC 1705.15.4 ASTM E-605	FOR FLOORS, ROOFS AND WALLS: FOUR SETS FOR MEASUREMENTS FOR EVERY 1,000 SQ FT SPRAYED AREA ON EACH LEVEL FOR STRUCTURAL MEMBERS: AT LEAST 25 PERCENT THE STEEL MEMBERS ON EACH LEVEL
TEST FOR DENSITY, BONDING STRENGTH, AND THICKNESS		●		IBC 1705.15.5 IBC 1705.15.6 ASTM E-605 ASTM E-736	FOR FLOORS, ROOFS AND WALLS: ONE SET FOR MEASUREMENT FOR EVERY 2,500 SQ FT SPRAYED AREA ON EACH LEVEL FOR STRUCTURAL MEMBERS: ONE SAMPLE FOR EACH STRUCTURAL MEMBER ON EACH LEVEL FOR EVERY 2,500 SQ FT FLOOR AREA
MASTIC AND INTUMESCENT FIRE-RESISTANT COATINGS					
INSPECT SURFACE PREPARATION OF MEMBERS,RECORD AMBIENT TEMPERATURES, AND VENTILATION MEASURES, MEASURE APPLIED THICKNESS AND VISUAL INSPECTION.		●		IBC 1705.16 AWCI 12-B	VERIFY CONDITIONS ARE IN CONFORMANCE WITH MANUFACTURERS WRITTEN INSTRUCTIONS

SPORTBILLS
SPORTBILLS

SAVED: 4/6/2026 8:42:27 AM
FILE: I:\Assets\Projects_MTS\Pyramid_Building_Improv_2026\1400261_MTS_Pyramid_Building_Improv_Structural.rvt

NO.	DATE	REVISIONS	BY	CHK	APRV

HDR

REGISTERED PROFESSIONAL ENGINEER MARK T. HARPER No. S4387 CIVIL STATE OF CALIFORNIA

DESIGNED BY P. DESAI	DATE 04/26
DRAWN BY P.DESAI	04/26
CHECKED BY M. HARPER	04/26
APPROVED BY N. CAPPADOCIA	04/26

Metropolitan Transit System

PYRAMID BUILDING STRUCTURAL IMPROVEMENTS

SPECIAL INSPECTIONS

SCALE NO SCALE
CONTRACT NO. WO352-AE-27
DRAWING NO. S-002
SHEET NO. 16 OF 29

FOR REDUCED PLANS ORIGINAL SCALE IS IN INCHES 0 1 2 3

PLAN NOTES:

1. "(E)" PREFIX DENOTES EXISTING CONSTRUCTION.
2. "(N)" PREFIX DENOTES FOR NEW CONSTRUCTION.
3. CONTRACTOR SHALL CONFIRM EXISTING CONDITIONS AND NOTIFY ENGINEER OF ANY AND ALL DISCREPANCIES. EXISTING CONDITIONS ABOVE THE UNDERSIDE OF DECK HAVE NOT BEEN VERIFIED BY OWNER OR ENGINEER. INTENT IS TO MATCH EXISTING ROOF AND ROOFING MATERIALS. THE CONTRACTOR SHALL PREPARE AND SUBMIT A WORKPLAN FOR REMOVAL, INSTALLATION AND WORKER SAFETY PRIOR TO WORK BEING DONE ON REQUIRED PORTIONS OF ROOF AS STATED IN THE DRAWINGS

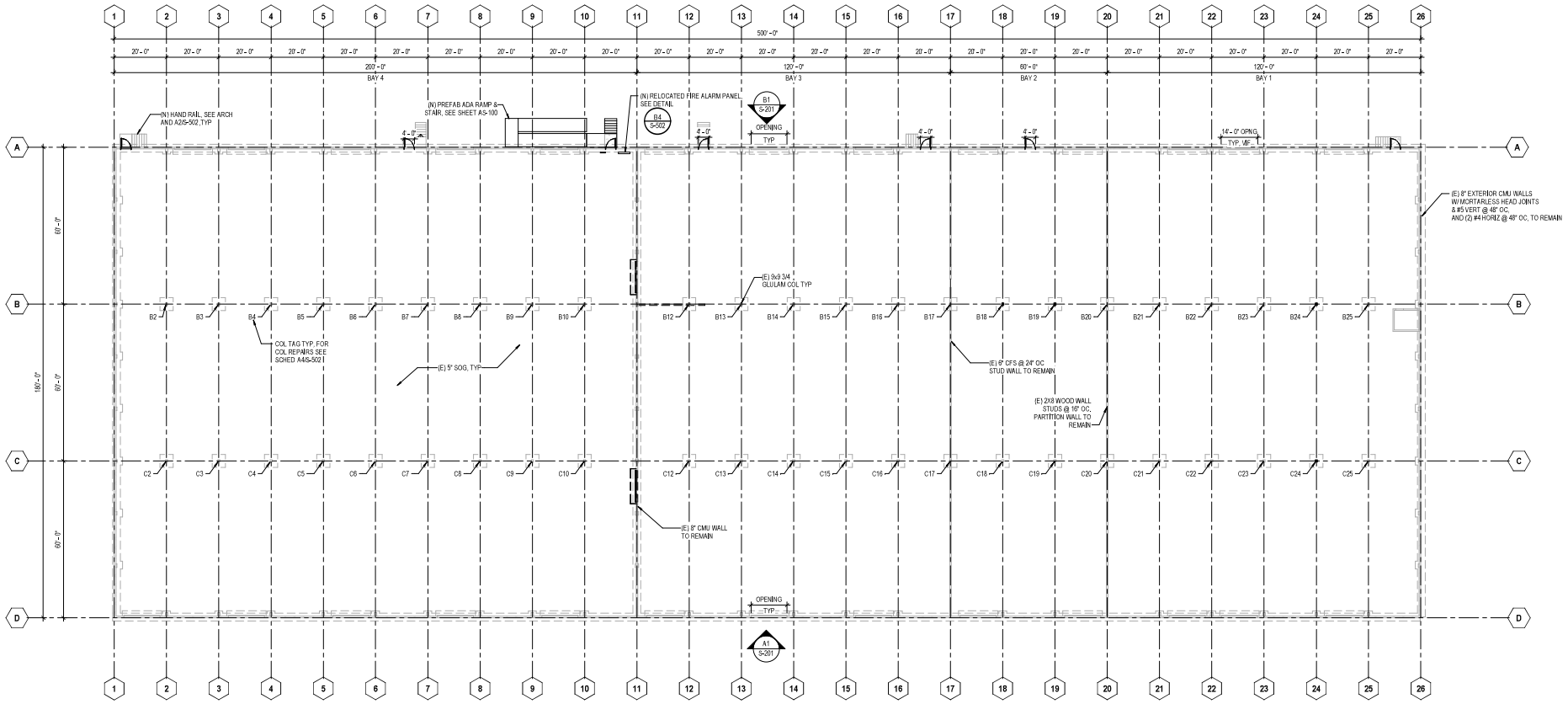

A1 STRUCTURAL FOUNDATION PLAN

1" = 20'-0"

NO.	DATE	REVISIONS	BY	CHK	APRV

HDR

REGISTERED PROFESSIONAL ENGINEER MARK T. HARPER No. S4387 STATE OF CALIFORNIA

DESIGNED BY P. DESAI	DATE 04/26
DRAWN BY P.DESAI	04/26
CHECKED BY M. HARPER	04/26
APPROVED BY N. CAPPADOCIA	04/26

MTS Metropolitan Transit System

PYRAMID BUILDING STRUCTURAL IMPROVEMENTS

STRUCTURAL FOUNDATION PLAN

SCALE 1" = 20'-0"

CONTRACT NO. WO352-AE-27

DRAWING NO. S-100

SHEET NO. 17 OF 29

FOR REDUCED PLANS ORIGINAL SCALE IS IN INCHES 0 1 2 3

PLAN NOTES:

1. CONTRACTOR SHALL CONFIRM EXISTING CONDITIONS AND NOTIFY ENGINEER OF ANY AND ALL DISCREPANCIES. EXISTING CONDITIONS ABOVE THE UNDERSIDE OF DECK HAVE NOT BEEN VERIFIED BY OWNER OR ENGINEER. INTENT IS TO MATCH EXISTING ROOF AND ROOFING MATERIALS. THE CONTRACTOR SHALL PREPARE AND SUBMIT A WORKPLAN FOR REMOVAL, INSTALLATION AND WORKER SAFETY PRIOR TO WORK BEING DONE ON REQUIRED PORTIONS OF ROOF AS STATED IN THE DRAWINGS.
2. IF ROTTEN PLYWOOD IS ENCOUNTERED DURING REMOVAL, CONTRACTOR SHALL NOTIFY THE ENGINEER TO REVIEW AND PROVIDE FOR FURTHER DIRECTION. ENGINEER WILL DETERMINE NEED TO IMPLEMENT ADDITIVE ALTERNATIVE A TO REPLACE COMPLETE ROOF.

(N) CROSS TIES BETWEEN PURLINS, SEE DETAIL: C3/S-501

(N) CROSS TIES BETWEEN PURLINS, SEE DETAIL: C3/S-501
(N) BLOCKING BETWEEN GL 1&3 AND GL 24&26, SEE DETAIL: B1/S-501, B2/S-501, B3/S-501 & B4/S-501

(N) CROSS TIES BETWEEN PURLINS, SEE DETAIL: C3/S-501
(N) CROSS TIES BETWEEN SUBPURLINS, SEE DETAIL: A2/S-501 & A3/S-501

(N) CROSS TIES BETWEEN PURLINS, SEE DETAIL: C3/S-501
(N) BLOCKING BETWEEN GL 1&3 AND GL 24&26, SEE DETAIL: B1/S-501, B2/S-501, B3/S-501 & B4/S-501
(N) CROSS TIES BETWEEN SUBPURLINS, , SEE DETAIL: A2/S-501 & A3/S-501

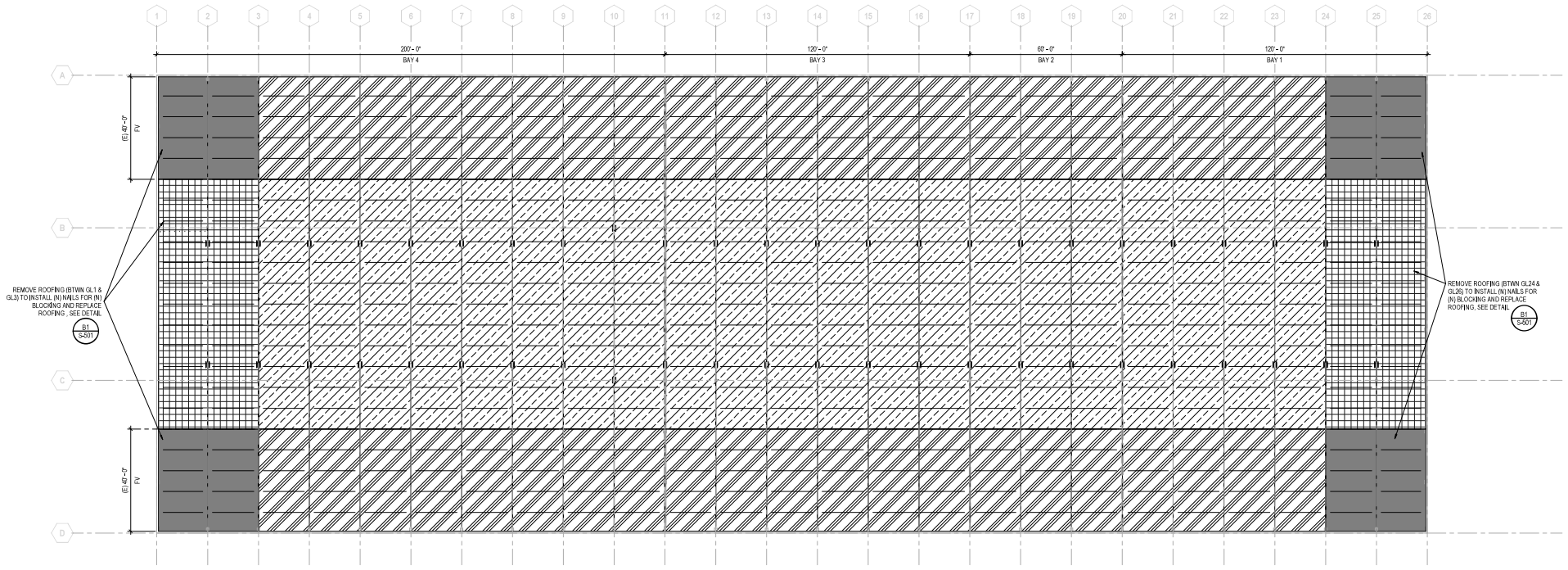

A1 STRUCTURAL ROOF - RETROFIT AREA
1" = 20'-0"

KEY PLAN

NO.	DATE	REVISIONS	BY	CHK	APRV

HDR

REGISTERED PROFESSIONAL ENGINEER
MARKT. HARPER
No. S4387
STATE OF CALIFORNIA

DESIGNED BY P. DESAI	DATE 04/26
DRAWN BY P.DESAI	04/26
CHECKED BY M. HARPER	04/26
APPROVED BY N. CAPPADOCIA	04/26

MTS Metropolitan Transit System

PYRAMID BUILDING STRUCTURAL IMPROVEMENTS

STRUCTURAL ROOF FRAMING PLAN - RETROFIT AREA

SCALE 1" = 20'-0"
CONTRACT NO. WO352-AE-27
DRAWING NO. S-101
SHEET NO. 18 OF 29

FOR REDUCED PLANS
ORIGINAL SCALE IS IN INCHES 0 1 2 3

PLAN NOTES:

1. CONTRACTOR SHALL CONFIRM EXISTING CONDITIONS AND NOTIFY ENGINEER OF ANY AND ALL DISCREPANCIES. EXISTING CONDITIONS ABOVE THE UNDERSIDE OF DECK HAVE NOT BEEN VERIFIED BY OWNER OR ENGINEER. INTENT IS TO MATCH EXISTING ROOF AND ROOFING MATERIALS. THE CONTRACTOR SHALL PREPARE AND SUBMIT A WORKPLAN FOR REMOVAL, INSTALLATION AND WORKER SAFETY PRIOR TO WORK BEING DONE ON REQUIRED PORTIONS OF ROOF AS STATED IN THE DRAWINGS
2. IF ROTTEN PLYWOOD IS ENCOUNTERED DURING REMOVAL, CONTRACTOR SHALL NOTIFY THE ENGINEER TO REVIEW AND PROVIDE FOR FURTHER DIRECTION. ENGINEER WILL DETERMINE NEED TO IMPLEMENT ADDITIVE ALTERNATIVE A TO REPLACE COMPLETE ROOF.
3. REFER TO BID FORM FOR ADDITIVE ALTERNATE A TO REPLACE ALL PLYWOOD.

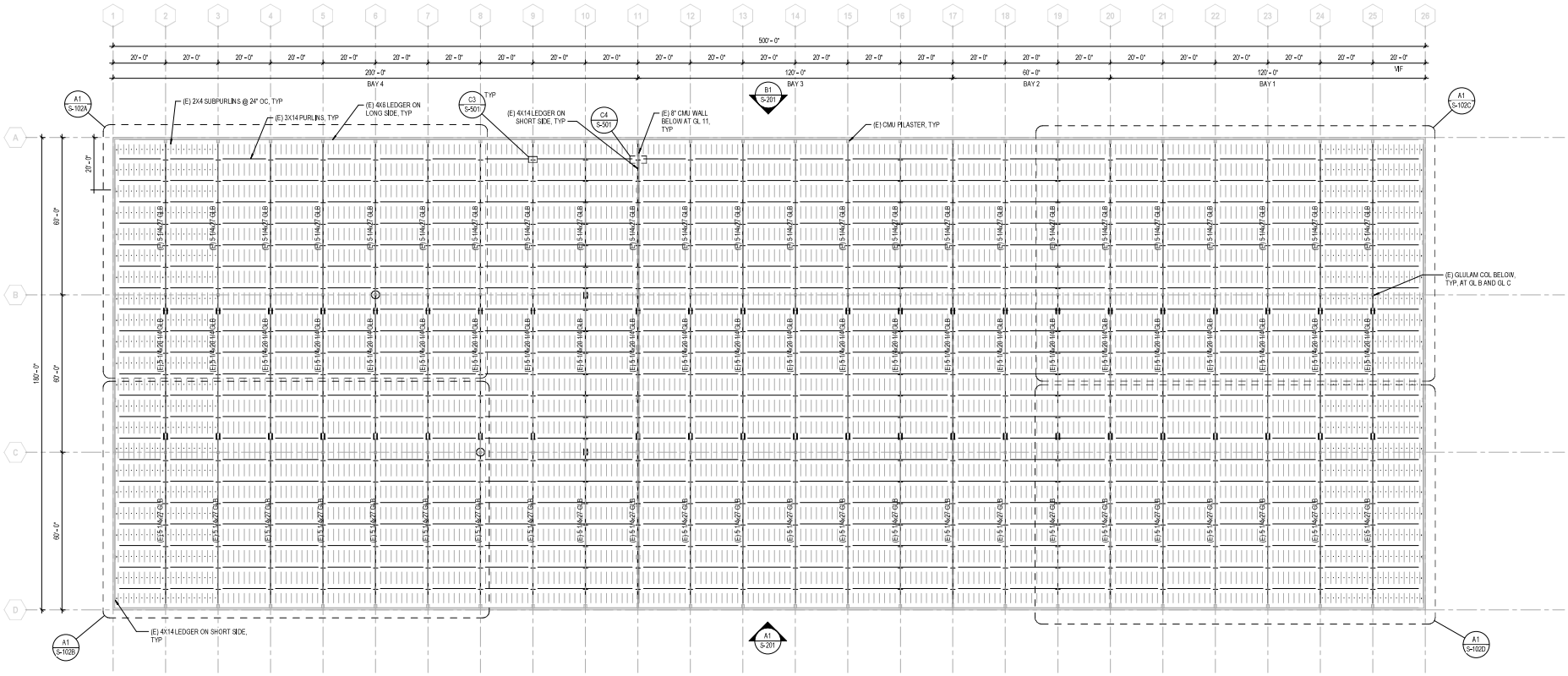

A1 STRUCTURAL ROOF FRAMING PLAN
1" = 20'-0"

KEY PLAN

NO.	DATE	REVISIONS	BY	CHK	APRV

HDR

REGISTERED PROFESSIONAL ENGINEER MARK T. HARPER No. S4387 CIVIL STATE OF CALIFORNIA

DESIGNED BY	P. DESAI	DATE 04/26
DRAWN BY	P.DESAI	04/26
CHECKED BY	M. HARPER	04/26
APPROVED BY	N. CAPPADOCIA	04/26

MTS Metropolitan Transit System

PYRAMID BUILDING STRUCTURAL IMPROVEMENTS

STRUCTURAL ROOF FRAMING PLAN

SCALE 1" = 20'-0"
CONTRACT NO. WO352-AE-27
DRAWING NO. S-102
SHEET NO. 19 OF 29

FOR REDUCED PLANS ORIGINAL SCALE IS IN INCHES 0 1 2 3

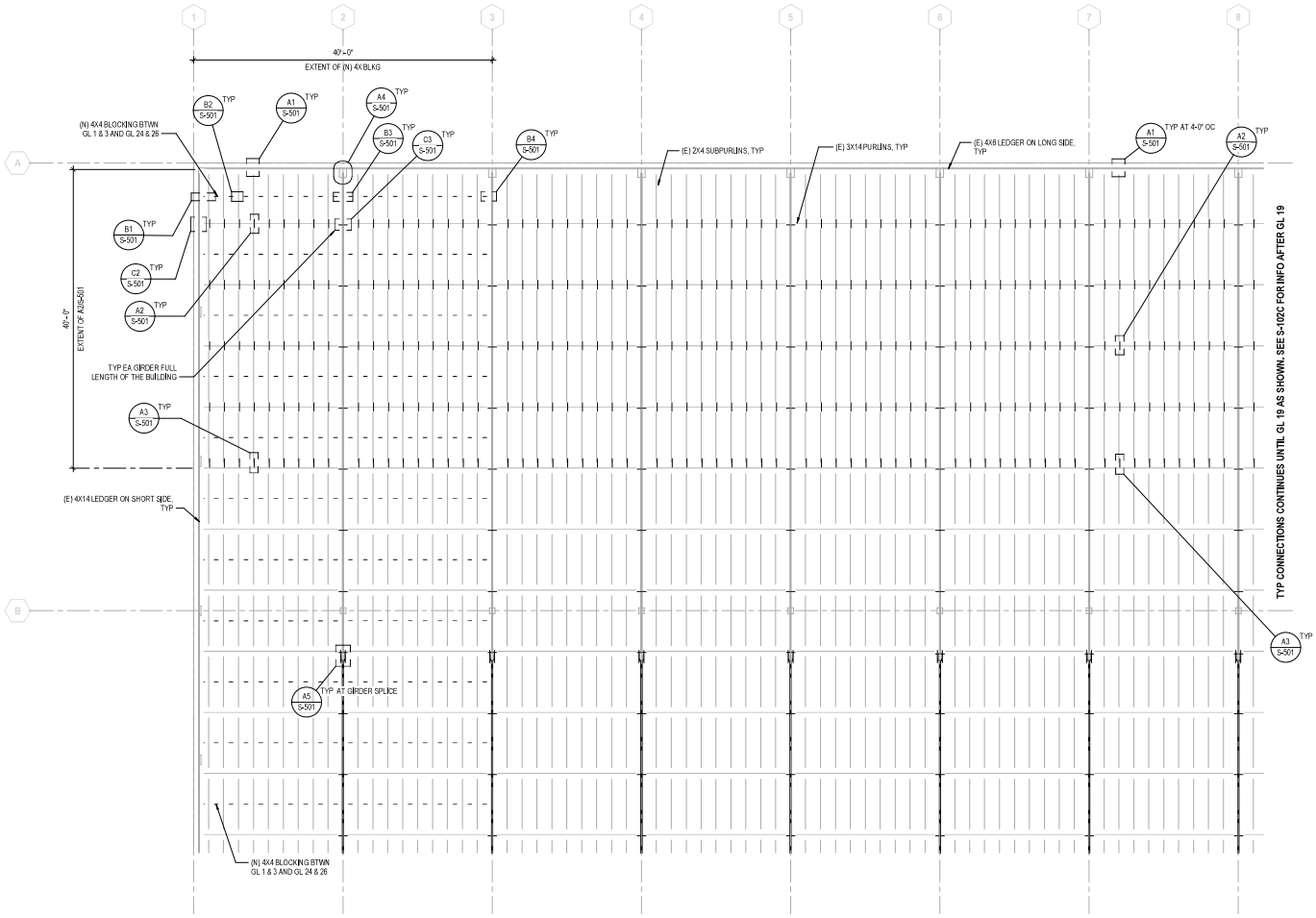

A1 ENLARGED STRUCTURAL ROOF FRAMING PLAN - NW CORNER
1/8" = 1'-0"

PLAN NOTE:

1. CONTRACTOR SHALL CONFIRM EXISTING CONDITIONS AND NOTIFY ENGINEER OF ANY AND ALL DISCREPANCIES. EXISTING CONDITIONS ABOVE THE UNDERSIDE OF DECK HAVE NOT BEEN VERIFIED BY OWNER OR ENGINEER. INTENT IS TO MATCH EXISTING ROOF AND ROOFING MATERIALS. THE CONTRACTOR SHALL PREPARE AND SUBMIT A WORK PLAN FOR REMOVAL, INSTALLATION AND WORKER SAFETY PRIOR TO WORK BEING DONE ON REQUIRED PORTIONS OF ROOF AS STATED IN THE DRAWINGS

KEY PLAN

NO.	DATE	REVISIONS	BY	CHK	APRV

HDR

REGISTERED PROFESSIONAL ENGINEER MARK T. HARPER No. S4387 STATE OF CALIFORNIA

DESIGNED BY P. DESAI	DATE 04/26
DRAWN BY P.DESAI	04/26
CHECKED BY M. HARPER	04/26
APPROVED BY N. CAPPADOCIA	04/26

MTS Metropolitan Transit System

PYRAMID BUILDING STRUCTURAL IMPROVEMENTS

STRUCTURAL ENLARGED PLAN - SHEET 1 OF 4

SCALE 1/8" = 1'-0"
CONTRACT NO. WO352-AE-27
DRAWING NO. S-102A
SHEET NO. 20 OF 29

FOR REDUCED PLANS ORIGINAL SCALE IS IN INCHES 0 1 2 3

PLAN NOTE:

1. CONTRACTOR SHALL CONFIRM EXISTING CONDITIONS AND NOTIFY ENGINEER OF ANY AND ALL DISCREPANCIES. EXISTING CONDITIONS ABOVE THE UNDERSIDE OF DECK HAVE NOT BEEN VERIFIED BY OWNER OR ENGINEER. INTENT IS TO MATCH EXISTING ROOF AND ROOFING MATERIALS. THE CONTRACTOR SHALL PREPARE AND SUBMIT A WORKPLAN FOR REMOVAL, INSTALLATION AND WORKER SAFETY PRIOR TO WORK BEING DONE ON REQUIRED PORTIONS OF ROOF AS STATED IN THE DRAWINGS

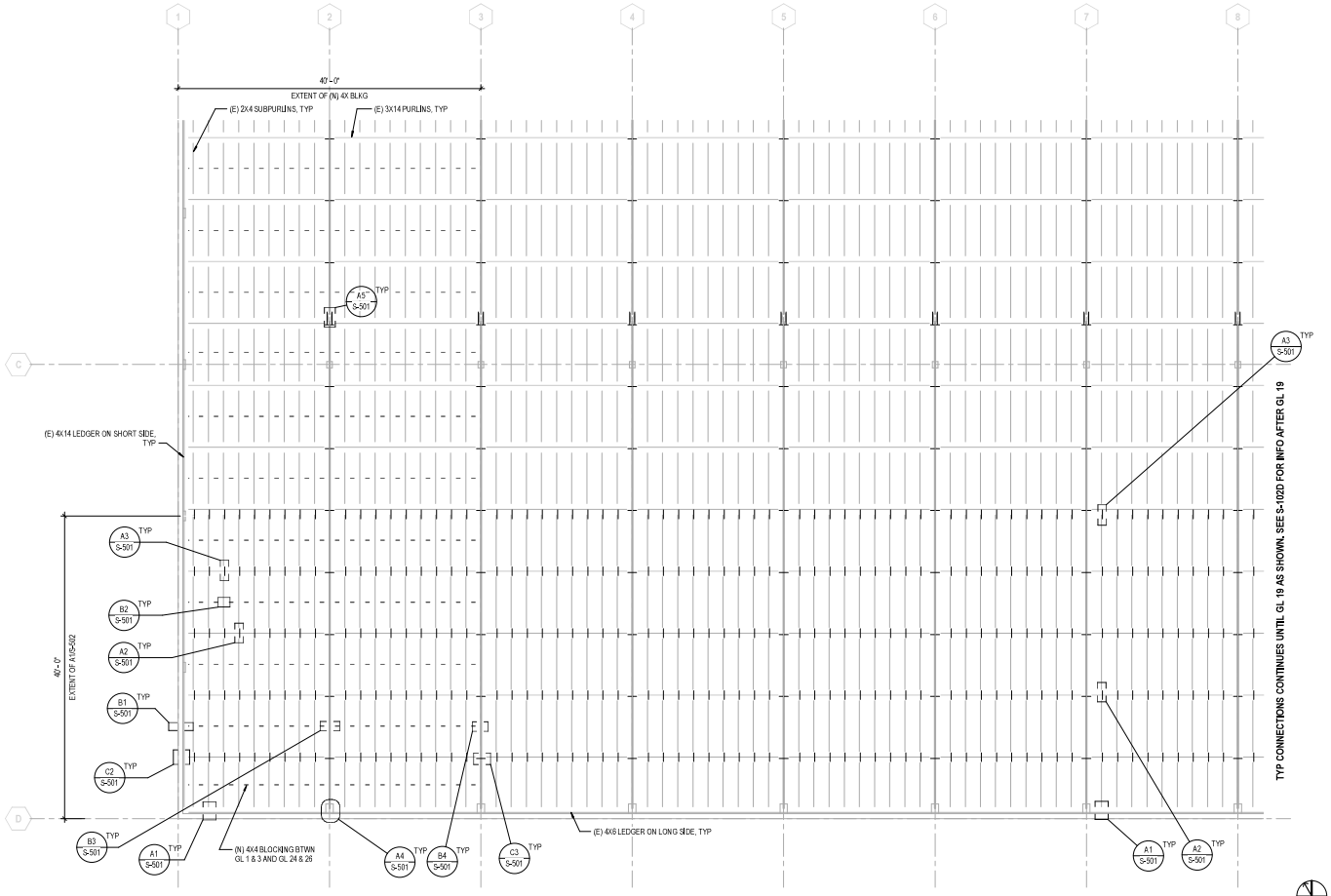

A1 ENLARGED STRUCTURAL ROOF FRAMING PLAN - SW CORNER
1/8" = 1'-0"

KEY PLAN

S-102A		S-102C
S-102B		S-102D

NO.	DATE	REVISIONS	BY	CHK	APRV

HDR

REGISTERED PROFESSIONAL ENGINEER MARK T. HARPER No. S4387 CIVIL STATE OF CALIFORNIA

DESIGNED BY P. DESAI	DATE 04/26
DRAWN BY P.DESAI	04/26
CHECKED BY M. HARPER	04/26
APPROVED BY N. CAPPADOCIA	04/26

MTS Metropolitan Transit System

PYRAMID BUILDING STRUCTURAL IMPROVEMENTS

STRUCTURAL ENLARGED PLAN - SHEET 2 OF 4

SCALE 1/8" = 1'-0"
CONTRACT NO. WO352-AE-27
DRAWING NO. S-102B
SHEET NO. 21 OF 29

FOR REDUCED PLANS ORIGINAL SCALE IS IN INCHES 0 1 2 3

PLAN NOTE:

1. CONTRACTOR SHALL CONFIRM EXISTING CONDITIONS AND NOTIFY ENGINEER OF ANY AND ALL DISCREPANCIES. EXISTING CONDITIONS ABOVE THE UNDERSIDE OF DECK HAVE NOT BEEN VERIFIED BY OWNER OR ENGINEER. INTENT IS TO MATCH EXISTING ROOF AND ROOFING MATERIALS. THE CONTRACTOR SHALL PREPARE AND SUBMIT A WORKPLAN FOR REMOVAL, INSTALLATION AND WORKER SAFETY PRIOR TO WORK BEING DONE ON REQUIRED PORTIONS OF ROOF AS STATED IN THE DRAWINGS

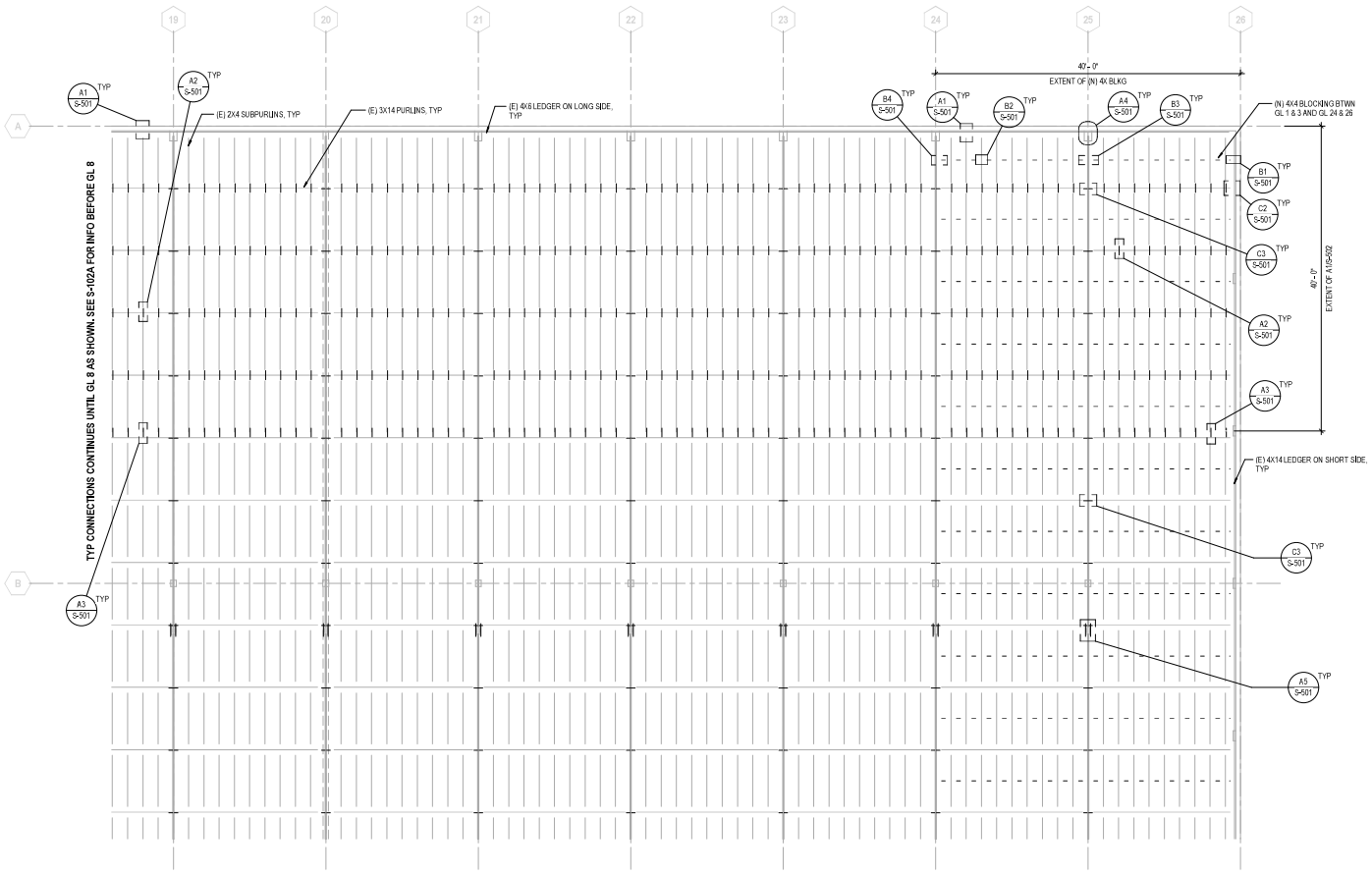

A1 ENLARGED STRUCTURAL ROOF FRAMING PLAN - NE CORNER
1/8" = 1'-0"

KEY PLAN

S-102A		S-102C
S-102B		S-102D

NO.	DATE	REVISIONS	BY	CHK	APRV

HDR

REGISTERED PROFESSIONAL ENGINEER MARK F. HARPER No. S4387 STRUCTURAL STATE OF CALIFORNIA

	DATE
DESIGNED BY P. DESAI	04/26
DRAWN BY P.DESAI	04/26
CHECKED BY M. HARPER	04/26
APPROVED BY N. CAPPADOCIA	04/26

MTS Metropolitan Transit System

PYRAMID BUILDING STRUCTURAL IMPROVEMENTS

STRUCTURAL ENLARGED PLAN - SHEET 3 OF 4

SCALE 1/8" = 1'-0"

CONTRACT NO. WO352-AE-27

DRAWING NO. S-102C

SHEET NO. 22 OF 29

FOR REDUCED PLANS ORIGINAL SCALE IS IN INCHES 0 1 2 3

PLAN NOTE:

1. CONTRACTOR SHALL CONFIRM EXISTING CONDITIONS AND NOTIFY ENGINEER OF ANY AND ALL DISCREPANCIES. EXISTING CONDITIONS ABOVE THE UNDERSIDE OF DECK HAVE NOT BEEN VERIFIED BY OWNER OR ENGINEER. INTENT IS TO MATCH EXISTING ROOF AND ROOFING MATERIALS. THE CONTRACTOR SHALL PREPARE AND SUBMIT A WORKPLAN FOR REMOVAL, INSTALLATION AND WORKER SAFETY PRIOR TO WORK BEING DONE ON REQUIRED PORTIONS OF ROOF AS STATED IN THE DRAWINGS

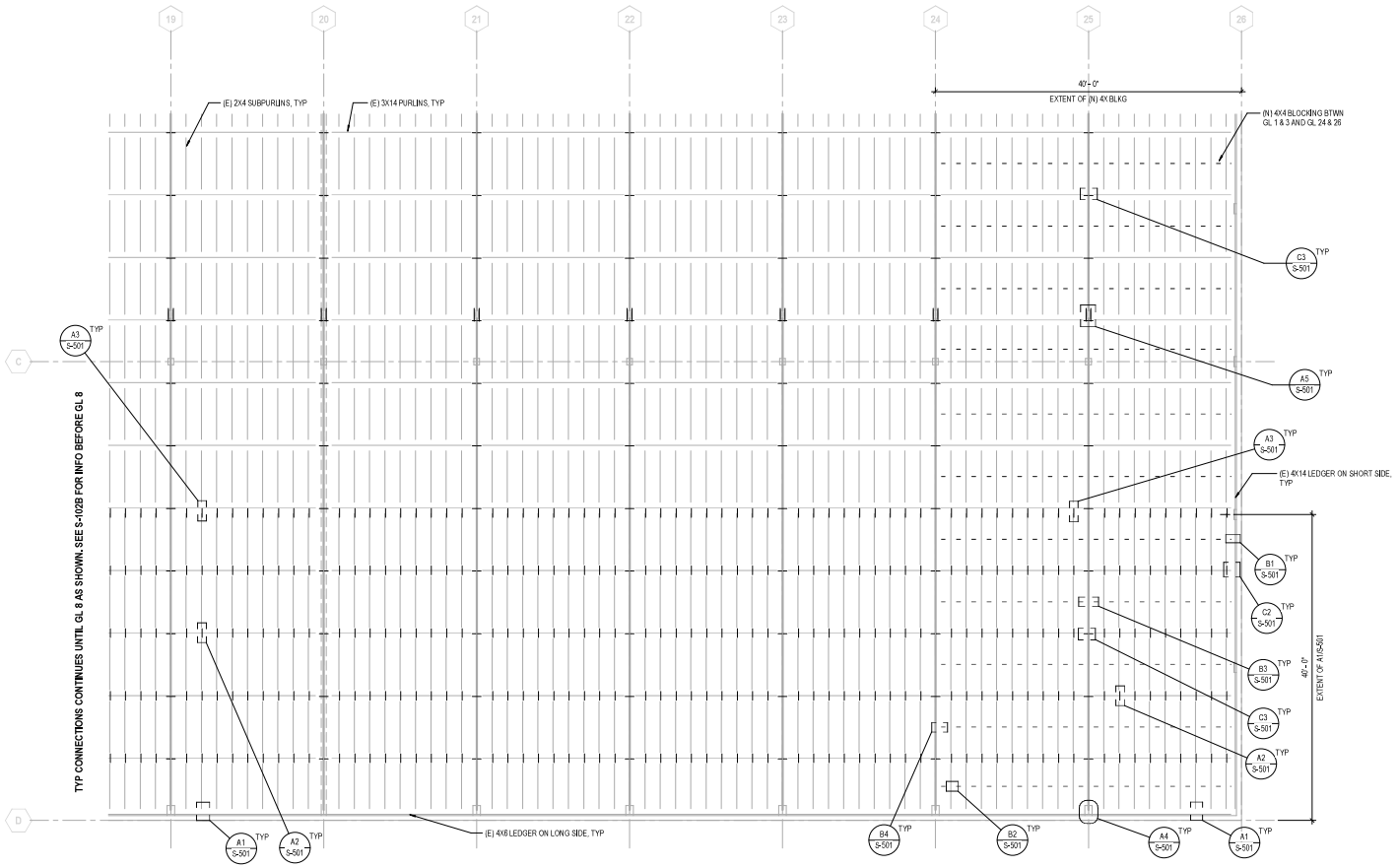

A1 ENLARGED STRUCTURAL ROOF FRAMING PLAN - SE CORNER
1/8" = 1'-0"

KEY PLAN

S-102A		S-102C
S-102B		S-102D

NO.	DATE	REVISIONS	BY	CHK	APRV

HDR

REGISTERED PROFESSIONAL ENGINEER MARK T. HARPER No. S4387 STATE OF CALIFORNIA

DESIGNED BY P. DESAI	DATE 04/26
DRAWN BY P.DESAI	04/26
CHECKED BY M. HARPER	04/26
APPROVED BY N. CAPPADOCIA	04/26

MTS Metropolitan Transit System

PYRAMID BUILDING STRUCTURAL IMPROVEMENTS

STRUCTURAL ENLARGED PLAN - SHEET 4 OF 4

SCALE 1/8" = 1'-0"
CONTRACT NO. WO352-AE-27
DRAWING NO. S-102D
SHEET NO. 23 OF 29

FOR REDUCED PLANS ORIGINAL SCALE IS IN INCHES 0 1 2 3

PLAN NOTE:

1. CONTRACTOR SHALL CONFIRM EXISTING CONDITIONS AND NOTIFY ENGINEER OF ANY AND ALL DISCREPANCIES. EXISTING CONDITIONS ABOVE THE UNDERSIDE OF DECK HAVE NOT BEEN VERIFIED BY OWNER OR ENGINEER. INTENT IS TO MATCH EXISTING ROOF AND ROOFING MATERIALS. THE CONTRACTOR SHALL PREPARE AND SUBMIT A WORKPLAN FOR REMOVAL, INSTALLATION AND WORKER SAFETY PRIOR TO WORK BEING DONE ON REQUIRED PORTIONS OF ROOF AS STATED IN THE DRAWINGS

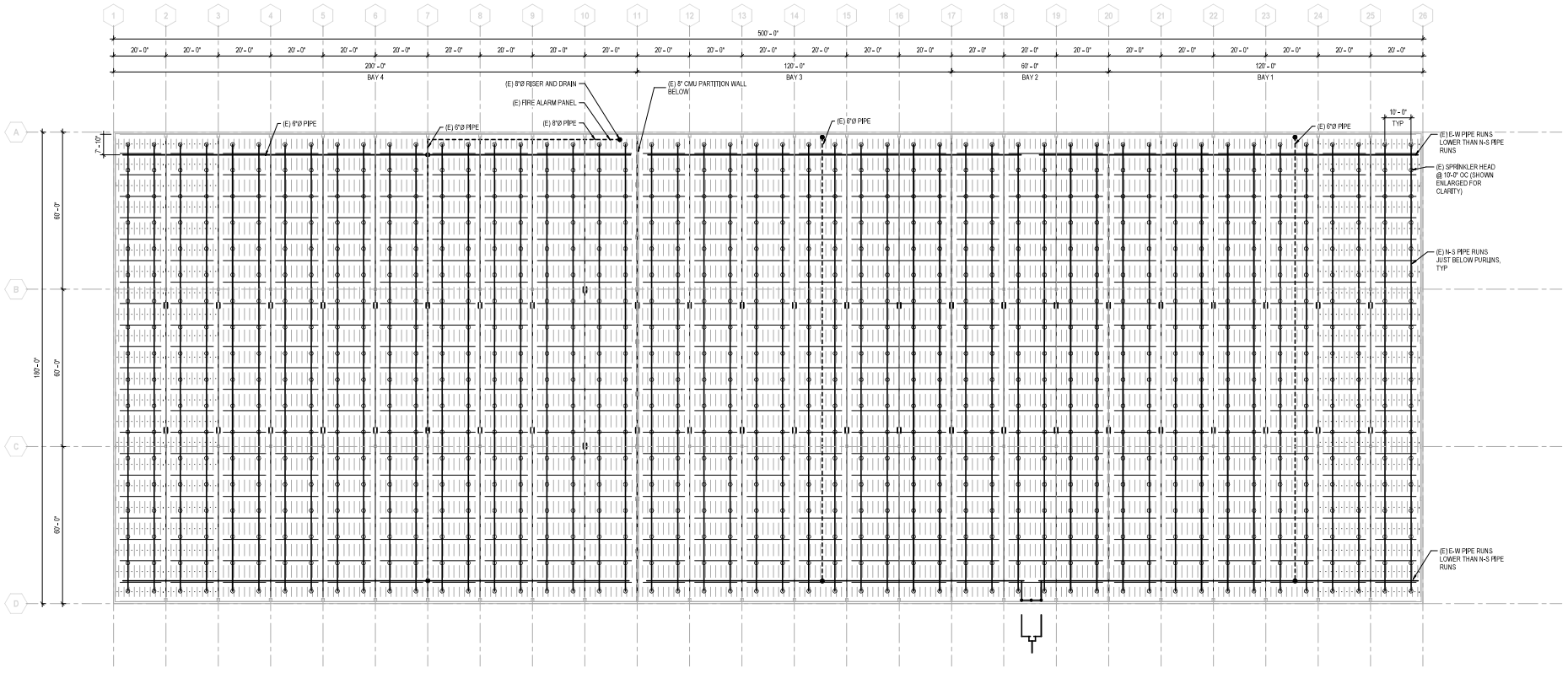

A1 (E) FIRE SPRINKLER PLAN - SINGLE LINE DIAGRAM (FIRE MARSHALL REFERENCE ONLY)
1" = 20'-0"

NO.	DATE	REVISIONS	BY	CHK	APRV

HDR

REGISTERED PROFESSIONAL ENGINEER MARK T. HARPER No. S4387 CIVIL STATE OF CALIFORNIA

DESIGNED BY P. DESAI	DATE 04/26
DRAWN BY P.DESAI	04/26
CHECKED BY M. HARPER	04/26
APPROVED BY N. CAPPADOCIA	04/26

MTS Metropolitan Transit System

PYRAMID BUILDING STRUCTURAL IMPROVEMENTS

FIRE SPRINKLER PLAN

SCALE 1" = 20'-0"
CONTRACT NO. WO352-AE-27
DRAWING NO. S-103
SHEET NO. 24 OF 29

FOR REDUCED PLANS ORIGINAL SCALE IS IN INCHES 0 1 2 3

NOTES:

1. FOR BIDDING PURPOSES, ASSUME 75% OF EACH OPENING REQUIRES RETROFIT. WHERE SPECIFIED, PROVIDE A UNIT COST PER LINEAR FOOT AS AN ADD OR DEDUCT BASED ON FINAL WORK COMPLETED.
2. CONTRACTOR TO FIELD VERIFY EXTENT OF DAMAGE AND REPAIR AS REQUIRED TO MEET REPAIR REQUIREMENTS OUTLINED IN THE DRAWINGS AND SPECIFICATIONS.
3. ALL DIMENSIONS SHOWN ON WALL ELEVATIONS ARE TO BE FIELD VERIFIED.
4. CONTRACTOR SHALL CONFIRM EXISTING CONDITIONS AND NOTIFY ENGINEER OF ANY AND ALL DISCREPANCIES. EXISTING CONDITIONS ABOVE THE UNDERSIDE OF DECK HAVE NOT BEEN VERIFIED BY OWNER OR ENGINEER. INTENT IS TO MATCH EXISTING ROOF AND ROOFING MATERIALS. THE CONTRACTOR SHALL PREPARE AND SUBMIT A WORKPLAN FOR REMOVAL, INSTALLATION AND WORKER SAFETY PRIOR TO WORK BEING DONE ON REQUIRED PORTIONS OF ROOF AS STATED IN THE DRAWINGS

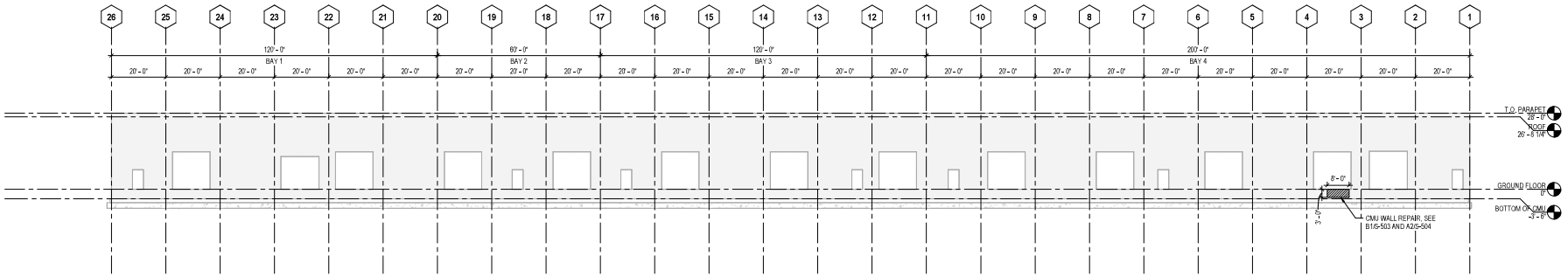

B1 NORTH SHEAR WALL ELEVATION
1" = 20'-0"

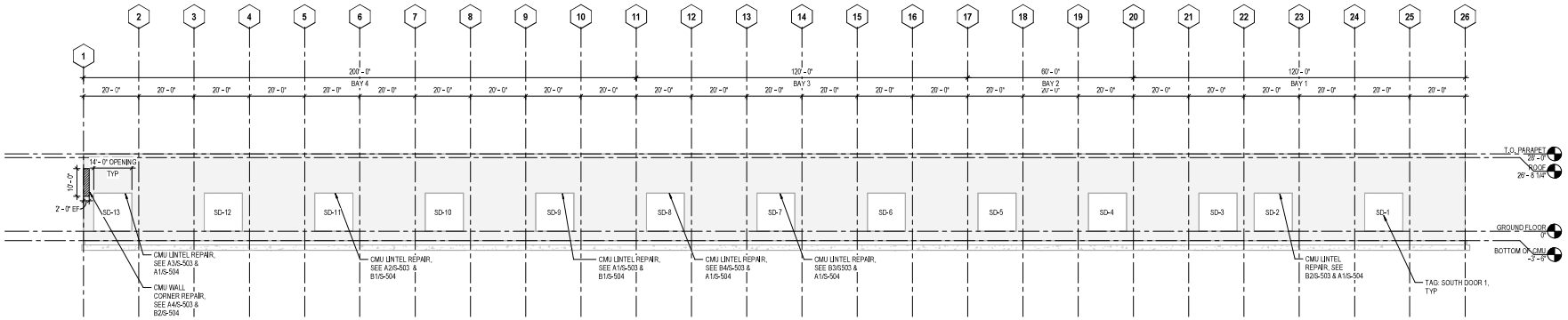

A1 SOUTH SHEAR WALL ELEVATION
1" = 20'-0"

NO.	DATE	REVISIONS	BY	CHK	APRV

HDR

REGISTERED PROFESSIONAL ENGINEER
MARK T. HARPER
No. S4387
CIVIL
STATE OF CALIFORNIA

DESIGNED BY P. DESAI	DATE 04/26
DRAWN BY P.DESAI	04/26
CHECKED BY M. HARPER	04/26
APPROVED BY N. CAPPADOCIA	04/26

MTS Metropolitan Transit System

PYRAMID BUILDING STRUCTURAL IMPROVEMENTS

STRUCTURAL WALL REPAIR ELEVATIONS

SCALE 1" = 20'-0"
CONTRACT NO. WO352-AE-27
DRAWING NO. S-201
SHEET NO. 25 OF 29

FOR REDUCED PLANS
ORIGINAL SCALE IS IN INCHES 0 1 2 3

SPORTBILLS
SPORTDRAS

SPARTE 4/6/2026 8:47:39 AM
P:\E&C Initiatives\Projects\4342216_MTS_Pyramid_Building_Improv_2026\4342216_MTS_Pyramid_Building_Improv_Sheets\Arch.rvt

NOTE:

1. CONTRACTOR SHALL CONFIRM EXISTING CONDITIONS AND NOTIFY ENGINEER OF ANY AND ALL DISCREPANCIES. EXISTING CONDITIONS ABOVE THE UNDERSIDE OF DECK HAVE NOT BEEN VERIFIED BY OWNER OR ENGINEER. INTENT IS TO MATCH EXISTING ROOF AND ROOFING MATERIALS. THE CONTRACTOR SHALL PREPARE AND SUBMIT A WORKPLAN FOR REMOVAL, INSTALLATION AND WORKER SAFETY PRIOR TO WORK BEING DONE ON REQUIRED PORTIONS OF ROOF AS STATED IN THE DRAWINGS

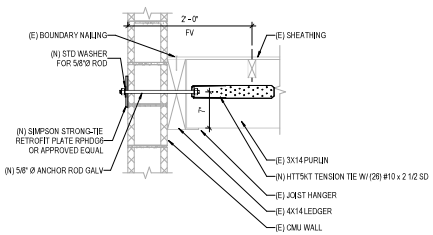

C2 CMU WALL - ANCHORAGE NS WALL TO PURLIN
1" = 1'-0"

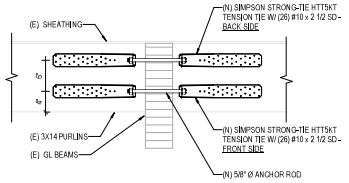

C3 PURLINS CROSS TIES
1" = 1'-0"

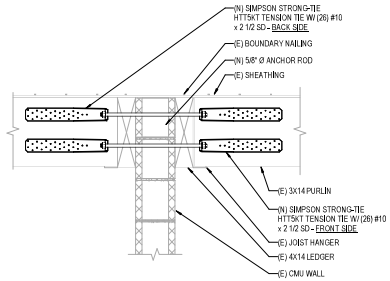

C4 CMU WALL - ANCHORAGE AT GL 11
1" = 1'-0"

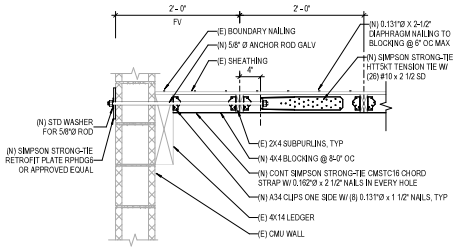

B1 CMU WALL - ANCHORAGE NS WALL TO (N) BLOCKING
1" = 1'-0"

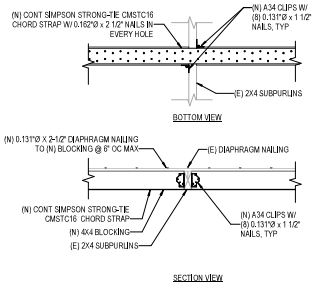

B2 (N) BLOCKING INTO SUBPURLINS W/ STRAP
1" = 1'-0"

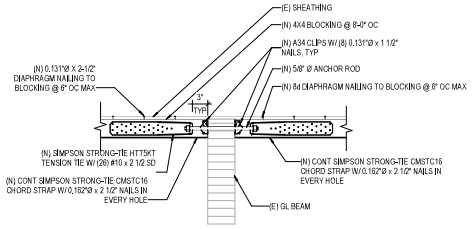

B3 (N) BLOCKING TO (E) GLULAM BEAM
1" = 1'-0"

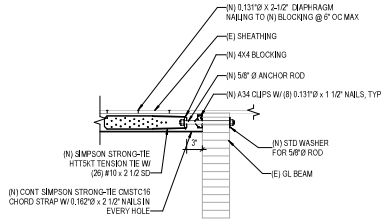

B4 (N) BLOCKING TO (E) GLULAM BEAM END
1" = 1'-0"

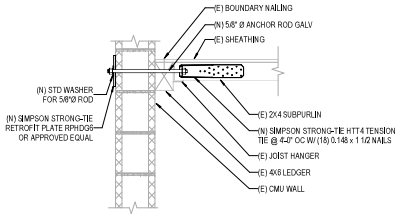

A1 CMU WALL - ANCHORAGE EW WALL
1" = 1'-0"

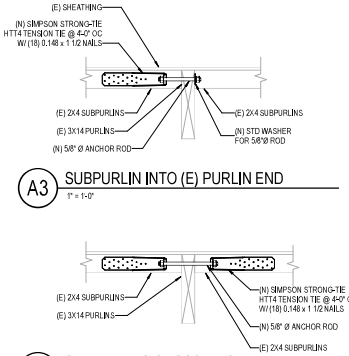

A3 SUBPURLIN INTO (E) PURLIN END
1" = 1'-0"

A2 SUBPURLINS CROSS TIES
1" = 1'-0"

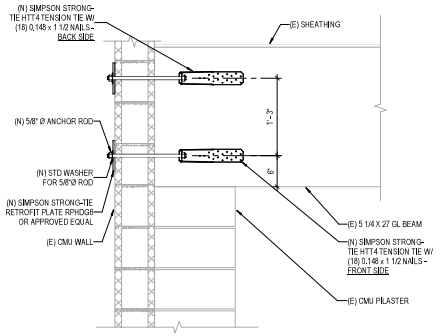

A4 CMU PILASTER - ANCHORAGE EW WALL
1" = 1'-0"

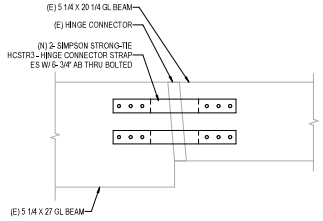

A5 HINGE CONNECTOR STRAP - GLULAM BEAMS
3/4" = 1'-0"

NO.	DATE	REVISIONS	BY	CHK	APRV

HDR

REGISTERED PROFESSIONAL ENGINEER MARK T. HARPER No. S4387 STATE OF CALIFORNIA

DESIGNED BY P. DESAI	DATE 04/26
DRAWN BY P.DESAI	04/26
CHECKED BY M. HARPER	04/26
APPROVED BY N. CAPPADOCIA	04/26

Metropolitan Transit System

PYRAMID BUILDING STRUCTURAL IMPROVEMENTS

STRUCTURAL DETAILS - SHEET 1 OF 2

SCALE AS NOTED

CONTRACT NO. WO352-AE-27

DRAWING NO. S-501

SHEET NO. 26 OF 29

FOR REDUCED PLANS ORIGINAL SCALE IS IN INCHES 0 1 2 3

SPORTBILLS SPORTBILLS

NOTE:

1. CONTRACTOR SHALL CONFIRM EXISTING CONDITIONS AND NOTIFY ENGINEER OF ANY AND ALL DISCREPANCIES, EXISTING CONDITIONS ABOVE THE UNDERSIDE OF DECK HAVE NOT BEEN VERIFIED BY OWNER OR ENGINEER. INTENT IS TO MATCH EXISTING ROOF AND ROOFING MATERIALS. THE CONTRACTOR SHALL PREPARE AND SUBMIT A WORKPLAN FOR REMOVAL, INSTALLATION AND WORKER SAFETY PRIOR TO WORK BEING DONE ON REQUIRED PORTIONS OF ROOF AS STATED IN THE DRAWINGS

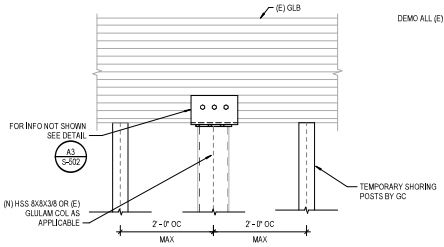

B2 TEMPORARY SHORING DETAIL FOR GLULAM BEAMS
3/4" = 1'-0"

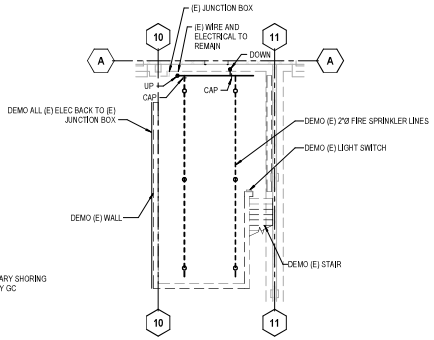

B3 MEZZANINE - DEMO PLAN
3/32" = 1'-0"

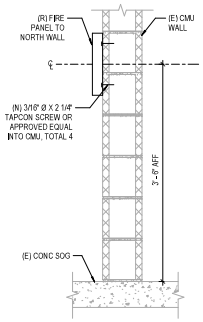

B4 FIRE PANEL ATTACHMENT TO THE (E) CMU WALL
1" = 1'-0"

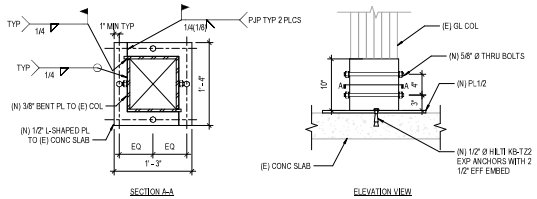

NOTES:
1. REMOVE (E) STEEL STRAP AND GROUND FLUSH. FILL THE (E) HOLES W/ GORILLA WOOD FILLER OR APPROVED EQUIVALENT.
2. IF GAP EXISTS BETWEEN (E) GL COL AND (N) PL, GC SHALL USE ABATRON WOODEPOX OR APPROVED EQUIVALENT TO FILL THE GAP.
3. IF THE GAP IS LARGER THAN 3/4", GC SHALL PROVIDE WOOD SHIM IN THE GAP AND THEN WOODEPOX TO FILL THE GAP.

B5 BASE CONN FOR (E) GL COLUMNS
1" = 1'-0"

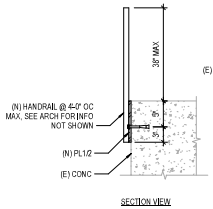

SECTION VIEW

NOTE: ALL EXPOSED STEEL TO BE HDG

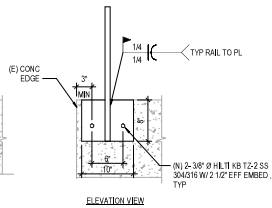

ELEVATION VIEW

A2 GUARDRAIL ATTACHMENT
1" = 1'-0"

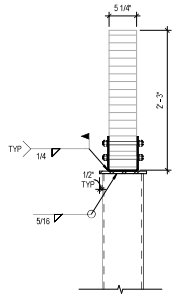

SECTION VIEW

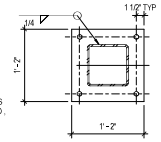

PLAN VIEW

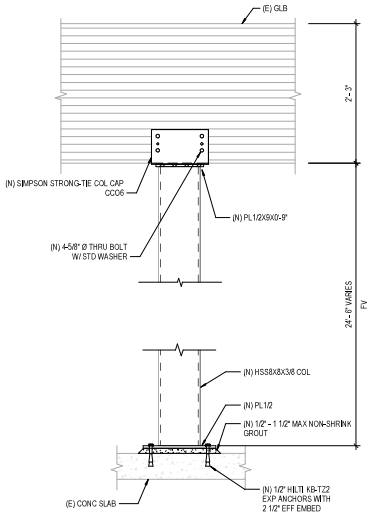

ELEVATION VIEW

A3 (N) HSS COL CONN DETAILS
1" = 1'-0"

SCHEDULE OF COLUMN REPAIRS

COLUMN TAG	DETAIL	REMARKS	SHORING DEAD LOAD
B2	B5/S502	-	-
B5	B5/S502	-	-
B8	B5/S502	-	-
B10	B5/S502	REMOVE (E) PLATES AT COL BASE AND GROUND FLUSH	-
B18	A3/S502	REPLACE THE COL W/ HSS COL	35 KIPS (ASD)
B19	A3/S502	REPLACE THE COL W/ HSS COL	35 KIPS (ASD)
B20	B5/S502	-	-
B21	B5/S502	-	-
B22	B2 AND B5/S502	SHORE THE BEAM AND ALIGN THE COL TO PLUMB	35 KIPS (ASD)
B23	B5/S502	-	-
B24	A3/S502	REPLACE THE COL W/ HSS COL	35 KIPS (ASD)
B25	B5/S502	-	-
C3	B5/S502	-	-
C4	B5/S502	-	-
C5	B5/S502	-	-
C6	B2 AND B5/S502	SHORE THE BEAM AND ALIGN THE COL TO PLUMB	35 KIPS (ASD)
C7	B5/S502	-	-
C12	B5/S502	-	-
C13	B5/S502	-	-
C17	B2 AND B5/S502	SHORE THE BEAM AND ALIGN THE COL TO PLUMB	35 KIPS (ASD)
C18	B2 AND B5/S502	SHORE THE BEAM AND ALIGN THE COL TO PLUMB	35 KIPS (ASD)
C19	B2 AND B5/S502	SHORE THE BEAM AND ALIGN THE COL TO PLUMB	35 KIPS (ASD)
C22	B5/S502	-	-
C24	A3/S502	REPLACE THE COL W/ HSS COL	35 KIPS (ASD)

NOTE:
1. SHORING LOADS FOR BEAMS DURING COLUMN REPLACEMENT ARE BASED ON DEAD LOADS ONLY. GC SHALL MAKE SURE NO ROOF LIVE LOADS ARE APPLIED. SEE DETAIL B2/S-502 FOR SHORING DETAIL

A4 SCHEDULE FOR COLUMN REPAIRS
NOT TO SCALE

NO.	DATE	REVISIONS	BY	CHK	APRV

HDR

REGISTERED PROFESSIONAL ENGINEER MARK T. HARPER No. S4387 STATE OF CALIFORNIA

DESIGNED BY P. DESAI	DATE 04/26
DRAWN BY P.DESAI	04/26
CHECKED BY M. HARPER	04/26
APPROVED BY N. CAPPADOCIA	04/26

MTS Metropolitan Transit System

PYRAMID BUILDING STRUCTURAL IMPROVEMENTS

STRUCTURAL DETAILS - SHEET 2 OF 2

SCALE AS NOTED

CONTRACT NO. WO352-AE-27

DRAWING NO. S-502

SHEET NO. 27 OF 29

FOR REDUCED PLANS ORIGINAL SCALE IS IN INCHES 0 1 2 3

NOTES:

1. SEE S-504 FOR CMU WALL REPAIR PROCEDURES.
2. CONTRACTOR SHALL CONFIRM EXISTING CONDITIONS AND NOTIFY ENGINEER OF ANY AND ALL DISCREPANCIES. EXISTING CONDITIONS ABOVE THE UNDERSIDE OF DECK HAVE NOT BEEN VERIFIED BY OWNER OR ENGINEER. INTENT IS TO MATCH EXISTING ROOF AND ROOFING MATERIALS. THE CONTRACTOR SHALL PREPARE AND SUBMIT A WORKPLAN FOR REMOVAL, INSTALLATION AND WORKER SAFETY PRIOR TO WORK BEING DONE ON REQUIRED PORTIONS OF ROOF AS STATED IN THE DRAWINGS

B1 CMU WALL - NORTH
NOT TO SCALE

B2 CMU LINTEL - SD2
NOT TO SCALE

B3 CMU LINTEL - SD7
NOT TO SCALE

B4 CMU LINTEL - SD8
NOT TO SCALE

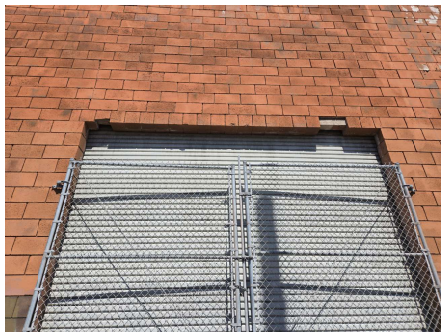

A1 CMU LINTEL - SD9
NOT TO SCALE

A2 CMU LINTEL - SD11
NOT TO SCALE

A3 CMU LINTEL - SD13
NOT TO SCALE

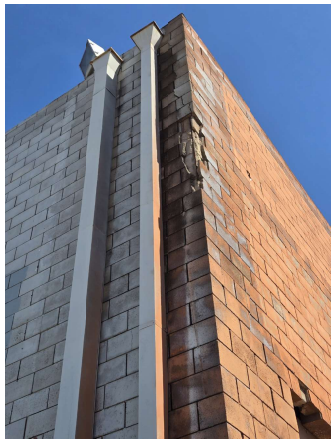

A4 CMU WALL SOUTHWEST CORNER
NOT TO SCALE

NO.	DATE	REVISIONS	BY	CHK	APRV

HDR

REGISTERED PROFESSIONAL ENGINEER MARK T. HARPER No. S4387 CIVIL STATE OF CALIFORNIA

DESIGNED BY P. DESAI	DATE 04/26
DRAWN BY P.DESAI	04/26
CHECKED BY M. HARPER	04/26
APPROVED BY N. CAPPADOCIA	04/26

MTS Metropolitan Transit System

PYRAMID BUILDING STRUCTURAL IMPROVEMENTS

CMU WALL REPAIRS - IMAGES

SCALE AS NOTED

CONTRACT NO. WO352-AE-27

DRAWING NO. S-503

SHEET NO. 28 OF 29

FOR REDUCED PLANS ORIGINAL SCALE IS IN INCHES 0 1 2 3

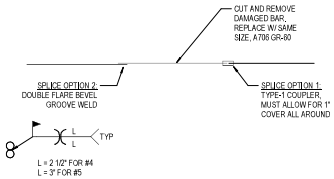

C2 REINFORCING SPLICE REPAIR DETAIL
NOT TO SCALE

CMU WALL REPAIR NOTES:

1. CHIP ALL LOOSE GROUT TO SOUND SUBSTRATE. DO NOT DAMAGE EXISTING REINFORCING BARS.
2. CHIP MINIMUM 1" INTO SOUND SUBSTRATE. DO NOT DAMAGE EXISTING REINFORCING BARS.
3. WHERE REINFORCING BARS ARE EXPOSED, CHIP AROUND BARS TO PROVIDE MINIMUM 1" CLEAR SPACE ON ALL SIDES. DO NOT DAMAGE EXISTING REINFORCING BARS.
4. CLEAN ALL RUSTED OR CORRODED BARS TO SOUND BASE METAL. BARS WITH ONLY SURFACE RUST AND WELL-BONDED GROUT DO NOT REQUIRE CLEANING.
5. REPORT ANY HEAVILY CORRODED BARS TO ENGINEER. REPAIR HEAVILY CORRODED BARS PER DETAIL C2.
6. APPLY BONDING AGENT TO ALL EXPOSED SURFACES PER MANUFACTURER'S RECOMMENDATIONS.
7. APPLY CORROSION INHIBITOR TO ALL EXPOSED REINFORCING BARS PER MANUFACTURER'S RECOMMENDATIONS.
8. FORM REPAIR SURFACE FLUSH WITH EXISTING CMU FACE.
9. GROUT WITH NON-SHRINK GROUT, MINIMUM 3,000 PSI COMPRESSIVE STRENGTH.
10. VIBRATE ALL GROUTING OPERATIONS.
11. SUBMIT GROUTING PROCEDURE TO ENGINEER FOR REVIEW AND APPROVAL PRIOR TO WORK.
12. CONTRACTOR SHALL CONFIRM EXISTING CONDITIONS AND NOTIFY ENGINEER OF ANY AND ALL DISCREPANCIES. EXISTING CONDITIONS ABOVE THE UNDERSIDE OF DECK HAVE NOT BEEN VERIFIED BY OWNER OR ENGINEER. INTENT IS TO MATCH EXISTING ROOF AND ROOFING MATERIALS. THE CONTRACTOR SHALL PREPARE AND SUBMIT A WORKPLAN FOR REMOVAL, INSTALLATION AND WORKER SAFETY PRIOR TO WORK BEING DONE ON REQUIRED PORTIONS OF ROOF AS STATED IN THE DRAWINGS

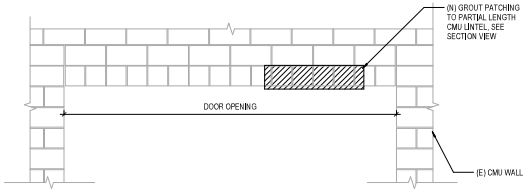

ELEVATION VIEW

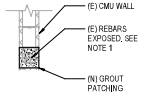

NOTE:
1. SEE CMU WALL REPAIR NOTES FOR REPAIR PROCEDURES.

SECTION VIEW

B1 (E) LINTEL REPAIR - PARTIAL LENGTH
1/2" = 1'-0"

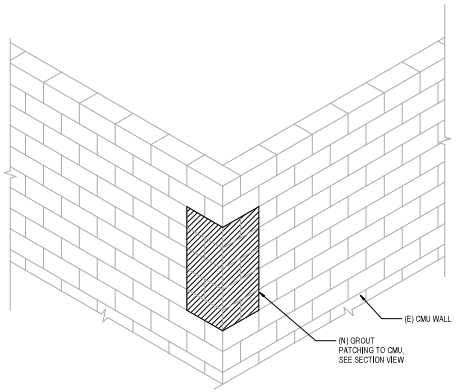

ISOMETRIC VIEW

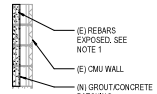

NOTE:
1. SEE CMU WALL REPAIR NOTES FOR REPAIR PROCEDURES.

SECTION VIEW

B2 (E) CMU WALL - CORNER REPAIR
1/2" = 1'-0"

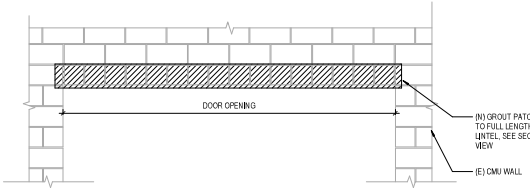

ELEVATION VIEW

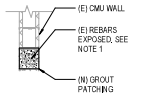

NOTE:
1. SEE CMU WALL REPAIR NOTES FOR REPAIR PROCEDURES.

SECTION VIEW

A1 (E) LINTEL REPAIR - FULL LENGTH
1/2" = 1'-0"

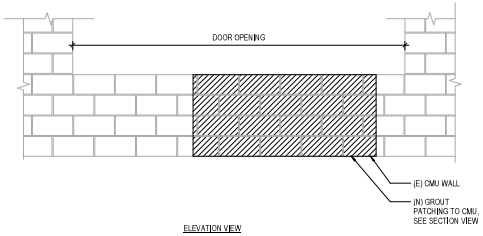

ELEVATION VIEW

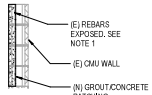

NOTE:
1. SEE CMU WALL REPAIR NOTES FOR REPAIR PROCEDURES.

SECTION VIEW

A2 (E) CMU WALL REPAIR
1/2" = 1'-0"

NO.	DATE	REVISIONS	BY	CHK	APRV

HDR

REGISTERED PROFESSIONAL ENGINEER MARK T. HARPER No. S4387 STRUCTURAL STATE OF CALIFORNIA

DESIGNED BY P. DESAI	DATE 04/26
DRAWN BY P.DESAI	04/26
CHECKED BY M. HARPER	04/26
APPROVED BY N. CAPPADOCIA	04/26

MTS Metropolitan Transit System

PYRAMID BUILDING STRUCTURAL IMPROVEMENTS

CMU WALL REPAIRS - DETAILS

SCALE AS NOTED

CONTRACT NO. WO352-AE-27

DRAWING NO. S-504

SHEET NO. 29 OF 29

FOR REDUCED PLANS ORIGINAL SCALE IS IN INCHES 0 1 2 3

SPORTBILL3
SPORTDRL3

SPATES 4/7/2023 5:37:11 PM
P:\E&C Admin\Project Work\311_MTS_Pyramid_Building_Improv_2020\1400281_MTS_Pyramid_Building_Improv_Structural.rvt

SECTION 00 01 10

TABLE OF CONTENTS

COVER AND TABLE OF CONTENTS
00 01 10 - TABLE OF CONTENTS

DIVISION 01 — GENERAL REQUIREMENTS
01 00 00 - GENERAL REQUIREMENTS

DIVISION 02 — EXISTING CONDITIONS
02 41 00 - DEMOLITION

DIVISION 03 — CONCRETE
03 05 00 - CONCRETE

DIVISION 04 — MASONRY
04 05 10 - MASONRY CLEANING
04 22 00 – CONCRETE MASONRY UNIT (CMU) REPAIR

DIVISION 05 — METALS
05 12 00 - STRUCTURAL STEEL
05 50 00 - METAL FABRICATIONS
05 51 00 - METAL STAIRS AND RAILINGS

DIVISION 06 — WOOD, PLASTICS, AND COMPOSITES
06 11 10 - WOOD FRAMING AND SHEATHING

DIVISION 07 — THERMAL AND MOISTURE PROTECTION
07 31 13 - ASPHALT SHINGLES
07 84 00 - FIRESTOPPING
07 92 13 - EXTERIOR JOINT SEALANTS

DIVISION 08 — OPENINGS
08 11 13 - HOLLOW METAL DOORS AND FRAMES
08 33 30 - COILING FIRE AND EGRESS ASSEMBLY
08 71 00 - DOOR HARDWARE

DIVISION 10 — SPECIALTIES
10 14 00 - SIGNAGE
10 44 00 - FIRE PROTECTION SPECIALTIES

DIVISION 26 — ELECTRICAL
26 00 10 - ELECTRICAL GENERAL REQUIREMENTS
26 05 19 - LOW VOLTAGE ELECTRICAL POWER CONDUCTORS AND CABLES
26 05 33 - CONDUITS
26 05 34 - BOXES
26 09 23 - LINE VOLTAGE LIGHTING CONTROL DEVICES
26 28 00 - OVERCURRENT PROTECTIVE DEVICES
26 28 16 - ENCLOSED SAFETY SWITCHES

END OF SECTION

SECTION 01 00 00

GENERAL REQUIREMENTS

PART 1 - GENERAL

1.1 ORDER OF WORK

A. Order of work shall be in accordance with Section 5.7, “Construction Sequence,” of the Special Conditions, and these Technical Specifications.

B. Within 10 calendar days of Notice to Proceed, the Contractor shall prepare and submit a proposed construction area work plan, for approval by the Engineer in accordance with Section 3.9, “Submittals,” of the Standard Agreement and General Conditions. Work plan shall include proposed phasing and laydown area requirements for equipment, material, company vehicles, and personnel vehicles. Work plan shall address working around overhead contact wire and maintaining rail operations for exterior work. Proposed phasing shall be in accordance with the following restrictions:

1. The following restrictions and parameters apply to work windows with The Pyramid Building:
    a. The contractor shall access The Pyramid Building, during the hours of 7:00 AM and 3:00 PM, unless approved otherwise by MTS.

C. All construction shall be performed in the sequence shown in the Contractor’s approved work plan.

D. Non-conflicting work in subsequent stages may proceed concurrently with work in preceding stages, provided satisfactory progress is maintained in the preceding stages of construction.

E. Contractor shall notify Engineer of intent to start work a minimum of three (3) business days prior to scheduled start date. At this time Contractor shall also schedule on-site meeting in accordance with Article 3. 2, “Site Conditions and Access,” of these Technical Specifications. Work performed within 15 feet of the outside rail of a track will require appropriate notification and flagging. Light rail transit flagging provided will be done in accordance with Section 5.11,” Flagging,” of the Special Conditions. If the Contractor changes his plans, he shall notify the Engineer not less than 24 hours prior to the pre-scheduled operation. If the Contractor neglects to notify the Engineer within this time frame, all costs for railroad flagmen shall be charged to the Contractor. The Contractor will not be assessed railroad flagging expenses when planned work is not performed due to conditions beyond his control.

F. Refer to Section 5.10, Roadway Workers Protection, of the Special Conditions. Prior to the start of construction and at the Contractor’s expense, all personnel entering the MTS Right-Of-Way (ROW), including subcontractors and third parties shall complete the MTS Roadway Worker Protection (RWP) training course, upon receiving Notice-to-Proceed, at the Contractor’s expense. The course is approximately four (4) hours in duration. Visit these websites for information: https://www.sdmts.com/business-center-permits/safety-training. Annual renewals are required for Roadway Worker Protection Safety training should duration of construction exceed the one-year expiration date of any worker continuing to work within the railroad right-of-way. Any new worker, including subcontractors, arriving after start of work and expected to enter the railroad right-of-way shall complete required training. All work shall be in conformance with these railroad safety requirements. These requirements are in addition to other local, state, and federal safety requirements.

G. The Contractor, its employees, subcontractors and their employees shall be qualified per FRA Track Worker Safety requirements, 49 CFR, Part 214C. In addition, the Contractor, its employees, subcontractors, and their employees shall be in compliance with 49 CFR, Part 219, Control of Alcohol and Drug Use.

H. Procure and submit for approval all equipment and material as indicated in the General and Special Conditions and on the plans.

I. Demolition and installation of all material and equipment shall be as indicated in the Contract Documents.

J. Application of Best Management Practices (BMP's) shall be required throughout the duration of this project.

K. If, in the opinion of the Engineer, the Contractor's operations are delayed or interfered with, the owner will compensate the Contractor for such delays to the extent provided in Section 3.32, "Time for Completion and Liquidated Damages," of the Standard Agreement and General Conditions.

L. Project sequencing shall be done to allow effective completion of all project work within the overall contract duration, and other work windows. Coordination and planning shall include, but are not limited to:

1. As required by Section 3.8, "Schedule," of the Standard Agreement and General Conditions, develop a baseline schedule that meets the contract requirements.
2. Contactors shall develop hourly work plans for power shutdowns, and other work windows, to be reviewed and approved in advance by MTS.

1.2 PERMITS

A. Contractor shall be responsible for obtaining all necessary permits to meet the requirements of the contract documents.

PART 2 - PRODUCTS (NOT USED)

PART 3 - EXECUTION

3.1 MOBILIZATION

A. Mobilization shall, as defined in Section 3.33, "Payment," of the Standard Construction Agreement and General Conditions and conform to Section 10104 of the Public Contract Code.

3.2 SITE CONDITIONS AND ACCESS

A. Contractor shall arrange a meeting on-site with the Engineer a minimum of five (5) days in advance of the start of construction at the site and examine the job-site area and conditions under which work will be performed. Contractor shall conform to the requirements of Section 5.8, "Documentation of Existing Conditions," Standard Construction Agreement and General Conditions. The Contractor shall notify the Engineer in writing, within 48 hours following the on-site meeting, of all discrepancies between the existing site conditions and those shown on the plans. Contractor's failure to provide written notification to the Engineer will indicate that no discrepancies exist.

B. The project site is accessible through public right of way, to the MTS yard access gate located on Main Street. Where access is limited through public right of way, the Contractor shall make all necessary arrangements, agreements and provide compensation to private property owners if necessary to access the area.

C. Contractor is to always maintain access to adjacent properties. Disruption to these business activities shall be kept to a minimum. The Contractor shall communicate in advance with each property owner/tenant affected by its operations prior to the start of work. In addition, the Contractor shall maintain a proactive relationship with the area merchants and inform them weekly of the construction schedule to assure that impacts to their businesses are kept at a minimum throughout the contract period.

3.3 OBSTRUCTIONS

A. Attention is directed to Section 3.6, "Existence of Utilities at the Work Site," of the Standard Construction Agreement and General Conditions.

B. The Contractor's attention is directed to the existence of certain underground facilities that may require special precautions to be taken by the Contractor to protect the health, safety and welfare of workers and of the public. Facilities requiring special precautions include, but are not

limited to: overhead electrical wires; conductors of petroleum products, oxygen, chlorine, and toxic or flammable gases; natural gas in pipelines greater than six (6) inches in diameter or pipelines operating at pressures greater than 60 psi (gauge); underground electric supply system conductors or cables either directly buried or in duct or conduit that do not have concentric neutral conductors or other effectively grounded metal shields or sheaths; and underground electrical grounded metal shields or sheaths; underground electrical conductors with potential to ground more than 300 volts; and shallow water laterals.

C. The Contractor shall notify the Engineer and the appropriate regional notification center for operators of subsurface installations at least two (2) working days, but not more than 14 calendar days, prior to performing any excavation or other work close to any underground pipeline, conduit, duct, wire or other structure. Regional notification centers include, but are not limited to, the following:

Notification Center	Telephone Number
Underground Service Alert-Southern California (USA)	811 1-800-227-2600
Cable, Pipe & Leak Detection (CPL) (For MTS Facilities)	1-619-660-0844

D. As MTS facilities are excluded from USA markouts, Contractor shall have all MTS facilities located and marked out by CPL or other approved utility locating subcontractor familiar with MTS facilities.

E. Contractor to verify location and elevation of all exiting utilities by potholing and mark out prior to excavation as necessary. Notifications shall be performed as necessary to complete the improvements without damage to existing facilities. Any work on the underground facilities shall be coordinated with the Engineer. The Contractor shall schedule a utility coordination meeting and contact all attendees a minimum of 48 hours in advance of the meeting date. Meeting attendees shall include the Engineer or Project Manager, the Contractor's representative, the utility representative (as necessary), and the approved utility locating subcontractor.

3.4 PRESERVATION OF PROPERTY

A. Due care shall be taken to avoid damage or injury to improvements of project facility or adjacent facilities, their utilities, and landscaping features that are not designated for removal as indicated on the plans or in the Technical Specifications. Any damage to the property or adjacent properties incurred due to the operations of the Contractor shall be repaired, replaced, or restored at the Contractor's expense. Repair, replacement, or restoration shall be performed such that facilities damaged will be at the same condition as when the Contractor had entered the site, or as good as required by the specifications accompanying the contract. Additional requirements shall be in compliance with Section 3.28, "Protection of Work and Property," of the Standard Construction Agreement and General Conditions.

3.5 JOB SITE COOPERATION

A. Attention is directed to Section 3.42, "Separate Contracts," of the Standard Construction Agreement and General Conditions.

B. It is not anticipated, at this time, work by other contractors will be in progress adjacent to or within the limits of this project during the duration of this contract. However, the Contractor shall be familiar with the referenced specification section listed above.

C. Where required, Contractor shall coordinate efforts with utility agencies for adjustment or relocation of utilities that will affect Contractor's work.

3.6 PROGRESS SCHEDULE

A. The Contractor shall submit to the Engineer a project schedule conforming to Section 3.8, "Schedule," of the Standard Construction Agreement and General Conditions.

B. The Engineer may adjust contract working days for ordered changes that affect the scheduled completion date, in conformance with the provisions in Section 3.34, "Changes and Extra Work Payment," of the Standard Construction Agreement and General Conditions.

3.7 CONSTRUCTION STAGING AREA

A. No MTS right of way or LRT stations shall be used for staging, storage or laydown areas during the construction period except as shown on the approved Construction Area Work Plan. The Contractor shall be responsible for procuring any onsite or offsite construction staging and laydown area, and shall be responsible for any property rental, permits, security, lighting, fencing, utilities or other temporary measures required to properly utilize the site as a construction staging and laydown area. The Contractor shall accept full responsibility and liability for use of the site during the construction period, and MTS shall be liable for any claims resulting from Contractor's use of an onsite or offsite construction staging and laydown area.

3.8 DUST CONTROL

A. Dust control shall conform to the provisions of Section 10-5, "Dust Control," of the Standard Specifications. Control dust resulting from work, inside and outside of work limits. Inside work limits Contractor may use water application, dust palliative, or both. Water usage for dust control shall be such that runoff from work area is minimized and sediment is prevented from entering storm drain systems. Dust control for outside work limits includes preventing buildup of dirt on adjoining travelled ways and covering of material producing dust when hauled. However, the Contractor shall endeavor, whenever possible, to restrict the use of water to control dust for his convenience due to the current need to conserve water.

3.9 PROJECT APPERANCE

A. Project Appearance of the site shall conform to the provisions in Section 3.22, "Cleaning Up," of the Standard Construction Agreement and General Conditions. The Contractor shall always maintain a neat appearance to the work site. Rail, wood ties, fencing, vegetation, concrete and asphalt rubble, and other debris developed during construction operations shall be disposed of concurrently with its removal. No stockpiling of demolition materials or debris will be permitted within the MTS or Public right-of-way. Materials to be relocated shall be neatly stored in a secure area.

3.10 SOUND CONTROL

A. Sound control shall conform to the provisions in Section 3.24, "Excessive Noise," of the Standard Construction Agreement and General Conditions. This requirement in no way relieves the Contractor from responsibility for complying with local ordinances regulating noise levels. For any night work, the Contractor will be required to obtain a Noise Permit from the City of San Diego, Development Services (telephone 619-446-5000).

3.11 CONSTRUCTION AREA LIGHTING

A. All working areas utilized by the Contractor to perform work during the hours of darkness, shall be lighted to conform to the minimum illumination intensities established by the California Division of Industrial Safety Construction Safety Orders.

B. All lighting fixtures shall be mounted and directed in a manner precluding glare to adjacent residences, businesses, approaching traffic, and shall not be directed parallel to the track to avoid interfering with the vision of the train operators and crews. In addition, lighting fixtures shall not obscure any railroad signals.

3.12 TEMPORARY FENCING

A. Where applicable in accordance with these Technical Specifications temporary fencing shall be securely anchored and shall only be placed within MTS ROW except where temporary fencing is used for pedestrian traffic control. The Contractor shall submit a temporary fencing plan a minimum of five (5) working days for approval by the Engineer prior to the installation of any temporary fencing.

3.13 QUALITY CONTROL

A. PURPOSE

The Contractor is responsible for Quality Control (QC) throughout the construction of the project. The QC system shall consist of plans, procedures, and organization necessary to produce a product that complies with the Contract requirements. The system shall cover construction and procurement operations, both onsite and offsite, and shall be keyed to the proposed construction sequence.

B. CONTRACTOR'S QUALITY CONTROL (CQC) PLAN

Not later than ten (10) calendar days following the return of the Notice to Proceed, the Contractor shall furnish the CQC Plan for review and approval by MTS. The CQC Plan shall identify personnel, procedures, control, instructions, tests, testing frequencies, records, and forms to be used. Construction will be permitted to begin only after acceptance of the CQC Plan.

C. CONTENT OF THE CQC PLAN

The CQC Plan shall include, as a minimum, the following to cover all construction operations, both onsite and offsite, including work by subcontractors, fabricators, suppliers, and purchasing agents:

1. The purpose of the CQC Plan as well as the Contractor's company policy statement regarding QC.
2. A description of the QC organization, including a chart showing lines of authority and acknowledgment that the CQC staff shall implement the CQC Plan for all aspects of the Work specified.
3. The names, qualifications, duties, responsibilities, and authorities of each person assigned a QC function.
4. Procurement control procedures for scheduling, reviewing, certifying, and managing submittals, including those of subcontractors, offsite fabricators, suppliers, and purchasing agents.
5. Control, verification, and acceptance testing procedures for each specific test to include the test name, specification paragraph requirement test, feature of work to be tested, test frequency, and person responsible for each test.
6. Procedures for tracking preparatory, initial, and follow-up control phases and control, verification, and acceptance tests, including documentation.
7. Procedures for tracking construction deficiencies from identification through acceptable corrective action. These procedures will establish verification that identified deficiencies have been corrected.
8. Reporting procedures, including proposed reporting formats.
9. Contractor's plan identifying QC activities and testing requirements for all definable features of work. A definable feature of work is a task that is separate and distinct from other tasks and has separate control requirements. It could be identified by different trades or disciplines, or it could be work by the same trade in a different environment. Although each section of the specifications may generally be considered as a definable feature of work, there is frequently more than one definable feature under a particular section.

D. ACCEPTANCE OF THE CQC PLAN

Acceptance of the CQC Plan by MTS is required prior to the start of construction. Final acceptance is conditional and will be predicated on satisfactory performance during the construction. MTS reserves the right to require the Contractor to make changes to the CQC Plan, including the removal or addition of personnel, as necessary, to obtain the quality specified.

E. NOTIFICATION OF CHANGES TO THE CQC PLAN

After acceptance of the CQC Plan, the Contractor shall notify MTS, in writing, prior to any proposed change. Proposed changes must be approved by MTS.

F. INSPECTION AND QC TESTING

1. The Contractor shall perform inspection and Quality Control (QC) testing as specified or required by the Standard Specifications and these Special Provisions to verify that control measures are adequate to provide a product which conforms to contract requirements. A list of all tests to be performed shall be furnished to the Engineer prior to any work beginning. The list shall identify the test name, specification paragraph containing the test requirements, and the personnel responsible for each type of test. The Contractor shall notify the Engineer at least 24 hours in advance of testing.
2. Testing includes, but is not limited to: qualification tests, factory tests, installation verification tests, construction material tests, demonstration tests, and pre-operation tests. Contractor's QC testing shall be performed and documented by qualified persons other than those responsible for accomplishing the work being inspected.
3. Procedures shall be developed and implemented by the Contractor covering performance of inspection and test activities, including personnel qualification, measuring equipment control, and calibration and status control. Deficiencies during testing and inspection shall be noted in the Contractor's Daily Report and must be corrected prior to acceptance. Logs of testing and inspections shall be kept by the Contractor and are subject to review by MTS.
4. All tests taken, both passing and failing tests, shall be recorded in the Contractor's Daily Report. Specification paragraph reference, location where tests were taken, and the sequential control number identifying the test will be given. Items of nonconformance shall be identified and work shall not proceed for that feature of work until corrective action has been approved by MTS.
5. MTS may perform Quality Assurance (QA) testing with the aid of an independent testing laboratory to verify compliance. QA testing results by MTS, or their representative, shall govern and may require retesting for that feature of work at the Contractor's expense.
6. In-process inspection shall be utilized, in addition to receiving inspection, first article inspection, installation inspection, and final inspection, to evaluate project attributes (such as performance, reliability, etc.) and to verify that the project is built in accordance with the project requirements. Contractor-procured material shall be subject to Source Inspection requirements as stated in Section 3.27, "Tests and Inspections," of the Standard Construction Agreement and General Conditions.
7. Final acceptance of the project provides for a review of all pertinent records and documents impacting quality and is performed after all required inspections and testing are completed with acceptable results.
8. Records shall be maintained in the Contractor's project files for the various inspections and tests. Records provide evidence that the product has passed inspection/and or test with defined acceptance criteria. Records shall be submitted to MTS at the completion of the project.

3.14 RECORD DRAWINGS

A. Record accurately on one complete set of full size black and white prints denoting variation in work from original drawings. All recorded variations shall be done in red.

B. Dimensioning shall be from two permanent points of reference (sidewalks, pavement, curbs, streetlights, buildings, centerline of track, etc.). Markups shall be shown on record drawings daily or as work is performed. All drafting must be clearly legible, and dimensions shall be no smaller the 0.25-inches in size. Delineation between lines (edge of curb, irrigation line, edge of asphalt, etc.) must be clearly made by note or line type.

C. The Contractors shall maintain record drawings on site at all times. These drawings are subject to inspection at any time.

D. Upon acceptance of work Contractor must submit the complete and final set of record drawings to the Engineer.

PART 4 - MEASUREMENT AND PAYMENT

4.1 MEASUREMENT

A. No separate measurement will be made for the requirements of this section unless otherwise provided for.

B. Mobilization

1. Mobilization will be measured for payment as a lump sum.
2.

4.2 PAYMENT

A. No separate payment will be made for the requirements of this section unless specifically noted for separate payment as stated herein. Full compensation for complying with the requirements of this section, not otherwise provided for, shall be considered as included in contract prices paid for the various items of work involved, and no additional compensation will be allowed therefore.

B. Mobilization

1. The contract lump sum price paid for “Mobilization” shall be in accordance with Section 3.33, “Payment,” of the of the Standard Construction Agreement and General Conditions.

END OF SECTION

SECTION 02 41 00
DEMOLITION

PART 1 - GENERAL

1.1 SUMMARY

A. Furnish labor, materials, tools, equipment, and services for Demolition, as indicated, in accordance with provisions of Contract Documents.

B. Completely coordinate with work of other trades.

1.2 QUALITY ASSURANCE

A. Conduct work in accordance with OSHA and EPA requirements.

B. National Fire Protection Association (NFPA):

1. NFPA 241 Standards for Safeguarding Construction, Alteration, and Demolition Operations.

C. Design, engineering, and construction of shoring, bracing and supports are responsibility of Contractor.

1. Employ a Registered Engineer, licensed to practice structural engineering in state in which project is located.
2. Design to support dead, live, and lateral, wind or seismic loads required by code or as otherwise indicated, along with construction loads during demolition until permanent construction is in place.

1.3 DESCRIPTION

A. Work Includes:

1. Demolition of designated structures.
2. Removal of demolition debris.
3. Protection of construction to remain, including:
   a. Utilities.
   b. Other items indicated.

B. Condition of Existing Structures to be demolished:

1. Owner assumes no responsibility for actual condition of structures to be demolished.
2. Owner will maintain building conditions existing at time of inspection for bidding purposes insofar as practicable.

C. Standpipes:

1. Maintain in operable condition and available for use by fire department.
2. Do not demolish standpipe more than one floor below floor being demolished.

1.4 JOB CONDITIONS

A. Perform preliminary investigations to ascertain extent of work.

1. Conditions apparent by investigation shall not be allowed as claim for extra cost.

B. Obtain and pay for permits required by authorities having jurisdiction and notify interested utilities companies prior to commencement of activities.

C. Obtain approval of authorities having jurisdiction for work affecting existing means of egress.

1. Review with and obtain approval of authorities for temporary construction which affects such areas.
2. Obtain approval of fire authorities.

D. Separate, store and dispose of hazardous materials and toxic wastes in accordance with local and EPA regulations and criteria listed below:

1. Disposal of fluorescent light tubes in open containers is not permitted.
2. Disposal of ballasts and other building elements containing PCBs in open containers is not permitted.
3. Disposal of building elements containing mercury in open containers is not permitted.

PART 2 - PRODUCTS (NOT USED)

PART 3 - EXECUTION

3.1 GENERAL DEMOLITION PROCEDURES

A. Items Designated for Re-use:

1. Remove, tag, protect from damage, store and deliver to locations designated.

B. Demolition of Structures:

1. Demolish completely and remove from site.
2. Use such methods as required to complete work within limitations of governing regulations.
3. Coordinate with Owner and utility suppliers for shut-off of utilities serving each building.
4. Disconnect and seal utilities before commencement of demolition.

C. Structural Demolition:

1. Demolish concrete and masonry in small sections.
2. Perform removal to avoid excessive loads on supporting walls, floors or framing.
3. Proceed in systematic manner, from top of structure to grade.
4. Complete demolition work above each floor or tier before disturbing supporting members on lower levels.
5. Remove structural framing members and lower to ground by means of hoists, derricks, or other suitable method.

D. Existing Utilities to Remain.

1. Keep in service and protect against damage during demolition.
2. Do not interrupt existing utilities serving occupied or facilities in use, except as authorized by Owner.
3. Provide temporary services during interruptions to existing utilities, as acceptable to Owner.

E. Provide barricades and safety lights as required.

3.2 PROTECTION OF FACILITIES TO REMAIN

A. Protect Property to Remain:

1. Conduct operations to prevent damage by falling debris or other cause to adjacent buildings, structures, and other facilities as well as persons.
2. Provide interior and exterior shoring, bracing, or support to prevent movement, settlement or collapse of structures.

B. Provide temporary dustproof partitions between demolition areas and occupied areas.

1. In public areas use clean, painted 1/2 inches thick plywood.
2. Utilize fire rated construction where required by Authorities Having Jurisdiction.

C. Provide temporary weather protection and insulation to prevent damage to existing facilities and discomfort to persons in occupied areas.

1. Insulation value: R 19.

3.3 ITEMS SALVAGED FOR CONTRACTOR

A. Storage or sale of removed items not permitted on site.

3.4 CLEAN-UP AND DISPOSAL OF DEMOLITION MATERIALS

A. Remove debris, rubbish, and materials resulting from demolition operations.

1. Remove and legally dispose of off-site.
2. Do not burn materials on site.

B. Dispose of items and materials not designated for Owner salvage or reuse.

1. Promptly remove from site.
2. Do not store or sell Contractor salvaged items or materials on site.

C. Return adjacent areas to condition existing prior to start of work.

PART 4 - MEASUREMENT AND PAYMENT

4.1 MEASUREMENT

A. “Remove Existing Temporary Structures with Hauling” will be measured for payment as a lump sum.

B. “Sprinkler Removal” shall be measured by the square foot of sprinkler removed per the area shown on the drawings.

C. “Remove Existing Overhead Coiling Fire Door” will be measured for payment as a lump sum.

4.2 PAYMENT

A. The contract lump sum price paid for “Remove Existing Temporary Structures with Hauling” shall include full compensation for furnishing all labor, materials, tools, equipment, and incidentals, and for doing all the work involved in “Remove Existing Temporary Structures with Hauling”, as specified in these Technical Specifications, the Contract Drawings, and as directed by the Engineer.

B. The contract price paid per square foot for “Sprinkler Removal” shall include full compensation for furnishing all labor, materials, tools, equipment, and incidentals and for doing all the work involved in “Sprinkler Removal”, complete in place, including remove of pipes, hangers, fasteners, hardware, connectors, caping and all incidental materials, as specified these in these Technical Specifications, the Contract Drawings, and as directed by the Engineer

C. The contract lump sum price paid for “Remove Existing Overhead Coiling Fire Door” shall include full compensation for furnishing all labor, materials, tools, equipment, and incidentals, and for doing all the work involved in “Remove Existing Overhead Coiling Fire Door”, as specified these Technical Specifications, the Contract Drawings, and as directed by the Engineer.

END OF SECTION

SECTION 03 05 00
CONCRETE

PART 1 - GENERAL

1.1 SUMMARY

A. Furnish labor, materials, tools, equipment, and services for Concrete, as indicated, in accordance with provisions of Contract Documents.

B. Coordinate with work of other trades.

1.2 QUALITY ASSURANCE

A. ASTM designated specifications for material quality and test methods appear throughout this specification.

B. Standards for concrete work: Comply with applicable provisions of latest editions of American Concrete Institute (ACI) publications except as otherwise indicated.

1. ACI 301 Specifications for Structural Concrete.
2. ACI 302.2R 06 Guide for Concrete Slabs that Receive Moisture Sensitive Flooring Materials.
3. ACI 347R Guide to formwork for Concrete.
4. ACI 304R Guide for Measuring, Mixing, Transporting, and Placing Concrete.

C. Concrete Mixture Proportioning:

1. Employ and pay for testing agency acceptable to Owner to perform materials evaluation, testing and design of concrete mixes.
2. Certificates, signed by material producer and Contractor, may be submitted in lieu of material testing when approved by Owner.

D. Concrete Testing:

1. Owner will employ a testing laboratory to perform routine testing and evaluation of concrete delivered to jobsite.
2. Contractor to assist with related communication and temporary storage of test cylinders at jobsite.

1.3 DEFINITIONS

A. Normal Weight Concrete:

1. Concrete for which density is not a controlled attribute.

B. Formwork:

1. Total system of support for freshly placed concrete including mold or sheathing which contacts concrete as well as supporting members, hardware, and necessary bracing.

C. Exposed Construction:

1. Concrete surface seen by the public from eye level from walking surface in a public location after completion of building.

D. Public Location:

1. Building areas routinely accessible to public and employees not responsible for maintenance.
    a. Storerooms, unfinished space, and large mechanical rooms are considered public locations.
    b. Equipment closets, elevator and mechanical penthouses are not considered public space.

1.4 SUBMITTALS

A. Shop Drawings:

1. Reinforcing drawings showing sufficient detail to permit placement in the field without reference to Contract Drawings.

B. Product Data:

1. Concrete Mix Designs for each proposed concrete mix.
   a. Proportions of materials.
   b. Slump.
   c. Air content.
   d. 7-day and 28-day compression test results of trial mixes or standard deviation analysis of an established mix.
2. Source and certification or proof of quality and compatibility of admixtures for each of the constituents of the proposed concrete mixes.
   a. Cement.
   b. Aggregate including gradation.
   c. Water.
   d. Admixtures:
      1) Air Entraining Admixture.
      2) High-Range Water Reducer.
      3) Other.
3. Joint filler.
4. Curing compound.
   a. Interior slabs: Include floor covering manufacturer’s written approval for use.

C. Samples:

1. Joint filler.

D. Project Information:

1. Testing Agency qualifications.
2. Production sample test reports:
   a. Include same data as required for mix design reports.
3. Reports of Contractor optional tests.
4. Test reports for in-place testing if such testing is performed.

PART 2 - PRODUCTS

2.1 MATERIALS

A. Portland Cement:

1. ASTM C150, Type I or Type III or ASTM C595.
2. Cement Color: Natural gray.

B. Aggregates:

1. General:
   a. Regard fine and coarse aggregates as separate ingredients.
   b. Each size of coarse aggregate, as well as combination of sizes when two or more are used, shall conform to grading requirements of applicable ASTM specifications.
2. Normal Weight Concrete:
   a. ASTM C33 – Standard Specification for Concrete Aggregates.

b. Aggregate approved by the local State Highway Department for use in concrete for state bridges.

C. Potable Water:

1. Conforming to ASTM C 1602.

D. Admixtures:

1. Use only when specifically required or permitted by Contract Documents, otherwise must be approved by Structural Engineer.
2. Prepare trial mixes and tests with job materials, including admixture, to demonstrate effect on strength and durability of hardened concrete.
3. Calcium chloride or admixtures containing more than 0.05% chloride ions are not permitted.
4. Air-entraining Admixtures:
   a. ASTM C260.
5. Mid-Range Water Reducer:
   a. ASTM C494, Type A.
6. High-Range Water Reducer:
   a. ASTM C494, Type F or G.
   b. Daracem – 100 or Adva Flow Series by Grace Construction Products.
   c. MasterRheobuild 1000, MasterGlenium Series or PS 1466 by Master Builders Solutions.
   d. Eucon 37 or Eucon SPJ by Euclid Chemical.
   e. PSP-N, PSP-N2, PSP-R, and PSP-L by Procrete Industries.
7. Water-reducing, Retarding, and Accelerating Admixtures:
   a. ASTM C494.
8. Supplementary Cementitious Materials, including Fly Ash:
   a. Fly Ash:
      1) ASTM C618, Class C or Class F.
      2) Obtain, prepare, and test samples in accordance with ASTM C311.
   b. Ground Granulated Blast Furnace Slag:
      1) ASTM C989, Grade 100 or 120.

E. Curing Compounds:

1. Strippable Curing Compound:
   a. The compound shall conform to ASTM C309, VOC Compliant, 350 g/l.
      1) For use on slabs receiving subsequent applied finishes and where noted on drawings.
      2) Install in accordance with manufacturer’s recommendation and supervision.
   b. Manufacturers:
      1) Kurez DR VOX or Kurez W VOX
      2) Horncure WB Horncure WB 30 by the Euclid Chemical Company.
2. Chemical Curing Compound:
   a. Base:
      1) L&M Construction Chemicals.
   b. Optional:
      1) Dayton Superior.
      2) Euclid.
      3) Sonneborn.
      4) WR Meadows.

F. Formwork Materials:

1. Exposed concrete surfaces: Acceptable panel type to provide continuous, straight, smooth finish. Use largest practical sizes to minimize form joints.
2. Unexposed concrete surfaces: Suitable material, dressed on edges and sides for tight fit.

G. Reinforcing Materials:

1. Reinforcing bars: ASTM A615, Grade 60
2. Welded wire reinforcing: ASTM A1064

2.2 PROPORTIONING CONCRETE MIXES

A. General:

1. Contractor and concrete supplier are responsible for providing concrete, in-place, which satisfies requirements listed in following table.
2. Contractor and concrete supplier are responsible for adjusting concrete mixes, as needed, to:
   a. Correct for non-conformance.
   b. Correct for a variation in the quality of a constituent.
   c. Compensate for extreme conditions in the field.

B. Establish concrete material proportions by proportioning methods described in ACI-301 guidelines.

Concrete Properties Table – IP Units							
Use	**28-day Strength (KSI)**	**Dry Unit Weight (PCF)**	**Max Aggregate Size (inch)**	**Air percent**	**Max. W/C Ratio**	**Slump (inch)**	**Cement Type**
All uses	4.0		3/4		0.50	4	I

C. Instructions for use of Table:

1. Provide concrete mixes with properties indicated in locations identified in Use column.
2. 28-day Strength:
   a. Installed concrete must meet or exceed the minimum 28-day compressive strength indicated.
   b. Laboratory mix design strengths must exceed this strength by the appropriate amount per ACI 301.
   c. Determine strength in accordance with ASTM C192 and ASTM C39.
3. Dry Unit Weight:
   a. If no value is listed, assume normal weight.
   b. Correlate fresh weight with air dry of same mix to use as basis of acceptance on job site. Test in accordance with ASTM C567.
4. Maximum Aggregate Size:
   a. Maximum size of coarse aggregate determined in accordance with:
      1) ASTM C33 for normal weight concrete.
   b. Some mixes are designated 3/4 inches or 1 inch, permitting contractor / supplier option.
5. Air Content:
   a. Required percentage of air as measured by ASTM C231, ASTM C173, or ASTM C138 as appropriate.
   b. Tolerance of air content as delivered is plus or minus 1-1/2% for normal weight and plus or minus 2% for lightweight concrete.
6. Water Reducer:

a. Mid-range water-reducer or high-range water-reducer shall be provided as necessary to achieve slump indicated.
b. Contractor, as option, may elect to use water reducers in other mixes to improve workability or permit pumping.

7. Maximum W/C Ratio:
   a. Maximum ratio of pounds of water to pounds of cementitious material allowed in the concrete mix.
8. Maximum Slump:
   a. Mixes without Water Reducers:
      1) Slump tolerance: Up to 1 inch above maximum indicated is allowed, provided the average of 5 consecutive batches does not exceed the indicated amount by more than a 1/2 inches.
   b. Mixes with Water Reducers:
      1) Slump indicated is after dosing.
      2) Slump tolerance after dosing: +1-1/2 inches and -1 inches is permitted for each batch.
      3) Slump tolerance prior to dosing: +1/2 inches and -1 inches from design mix slump.
   c. Determine slump in accordance with ASTM C143.
   d. Where slump is not specified, provide concrete with slump in accordance with approved mix designs.
9. Cement:
   a. Provide cement type indicated.
   b. Fly Ash or Ground Blast Furnace Slag is acceptable for partial replacement of cement.
      1) For each unit of cement removed, replace with two (2) units of Class F fly ash or one (1) unit of Class C fly ash.
      2) For each unit of cement that is removed, replace with one (1) unit of Ground Blast Furnace Slag
      3) Maximum amount of cement replaced shall not exceed that specified in table 4.2.2.9 of ACI 301.
      4) W/C Ratio shall be based on total cementitious material content.

D. Admixtures:
   1. Use admixtures in accordance with manufacturer's instructions.
   2. Use only approved admixtures.

PART 3 - EXECUTION

3.1 STORAGE OF MATERIALS

A. Store cement in weather tight buildings, bins, or silos which will exclude moisture and contaminants.

B. Arrange aggregate stockpiles and use in a manner to avoid excessive segregation and to prevent contamination with other materials or with other sizes of like aggregates.
   1. Perform test to determine conformance to requirements for cleanliness and grading on samples secured from aggregates at point of batching.
   2. Do not use frozen or partially frozen aggregates.

C. Allow sand to drain until it has reached relatively uniform moisture content before use.

D. Store admixtures in manner to avoid contamination, evaporation, or damage.
   1. For those used in form of suspensions or non-stable solutions, provide agitating equipment to assure uniform distribution of ingredients.

2. Protect liquid admixtures from freezing and temperature changes which would adversely affect their characteristics.

3.2 MIXING AND DELIVERY

A. Batch, mix and transport concrete in accordance with ASTM C94/C94M.

B. Batch and mix admixtures in accordance with manufacturer's instructions. If two or more admixtures are used, verify compatibility with manufacturers.

C. When adding water at job site is planned, deliver concrete to job site with a slump of 2 to 4 inches.

1. Limit water additions at job site to comply with W/C Ratio requirements.

D. Following addition of high range water reducer, mix for a minimum of 70 revolutions or 5 minutes to assure a consistent mixture.

E. Reduction of required average strength:

1. During construction, and after sufficient data becomes available, laboratory strength of mixes may be reduced in accordance with Section 4.2.3.6a of ACI 301, subject to approval by the Engineer/Owner.

3.3 FORMWORK AND REINFORCEMENT

A. Rough form finish may be provided for concrete surfaces covered with earth and not exposed to public view.

1. Ordinary form facing material may be used for rough form work.

B. Use smooth forms for interior and exterior concrete surfaces exposed to view.

1. Interior surfaces may be painted.
2. Use a plastic coated plywood or plastic liner to produce a hard, smooth uniform finish on concrete.
3. Arrange form joints and snap-tie holes to produce a repeating, orderly pattern with number of seams kept to practical minimum.
4. Seal seams to prevent leakage of mortar.
5. Support form facing with framing and backing capable of preventing visible form deflection.

C. Layout and measurement of concrete forms and embedment's, required for work, performed by a licensed surveyor, employed by contractor.

D. Clean, adjust and seal forms prior to concrete placement.

E. Remove excess form release materials to avoid visible residue on concrete surface.

F. Tighten forms to eliminate mortar leaks.

G. Accurately position, support and secure reinforcement and other cast-in items against displacement when placing concrete.

H. Locate and support with chairs, runners, spacers, and hangers, as required.

I. Set wire ties so ends are directed into concrete.

J. Install welded wire reinforcement in maximum practicable sizes.

K. Lap sides and ends at least one mesh square plus 2 inches.

L. Provide construction, isolation, and control joints as indicated or required.

M. Place construction joints so as to not impair strength and appearance of structure in locations approved by Engineer/Owner.

N. Locate isolation and control joints in slabs-on-grade to stabilize differential settlement and random cracking.

O. Set and build in anchorage devices and other embedded items required for other work that is attached to or supported by concrete.

P. Place sleeves, inserts, anchors, and embedded items required for adjoining work or for its support, prior to concreting.

1. Give Contractors whose work is related to concrete or supported by it ample notice and opportunity to introduce and furnish embedded items before concrete placement.
2. Position expansion joint material, and other embedded items accurately and support against displacement.
3. Fill voids in sleeves, inserts and anchor slots temporarily with readily removable material to prevent entry of concrete.

Q. Use setting diagrams, templates, and instructions for locating and setting.

3.4 PLACING CONCRETE

A. Place concrete in compliance with recommendations of ACI 304.

B. Place in a continuous operation within planned joints or sections.

C. Begin placement when work of other trades affecting concrete is completed.

D. Consolidate concrete using mechanical vibrators supplemented with hand rodding and tamping, so that concrete is worked around reinforcement and embedded items into parts of forms.

E. Protect concrete from physical damage or reduced strength due to weather extremes.

1. In hot weather comply with recommendations of ACI 305.
2. In cold weather comply with ACI 306.

3.5 CURING

A. Begin curing as soon as free water has disappeared from exposed surfaces.

B. Keep moist for 72 hours.

C. Continue curing by use of moisture retaining cover or strippable membrane forming curing compound for a period of 14 days.

D. Cure formed surfaces by moist curing until forms are removed.

E. Provide protection as required to prevent damage to concrete.

3.6 PATCHING AND FINISHING

A. Rough form finish:

1. Patch defects and tie holes.
2. Chip or rub off fins exceeding 1/4 inches in height.
3. Leave surfaces with texture imparted by forms.

B. Smooth form finish:

1. Remove forms and perform following work on walls and beam sides within day after placement.
2. Painted surfaces:
   a. Remove fins completely and grind smooth. Bush hammer and grind misaligned joints.
   b. With grout colored to match adjacent concrete, patch tie holes and areas of poor consolidation or mortar leakage and rub with carborundum bricks until uniform color and texture is produced.
3. Unpainted surfaces:
   a. Perform work as outlined for painted surfaces. In addition, provide a smooth rubbed finish over entire concrete surface no later than a day following form removal.
   b. Wet surfaces and rub with carborundum brick or other abrasive until uniform color and texture are produced.

c. Use no cement grout other than cement paste drawn from concrete itself by rubbing process.

C. Slab trowel finish:

1. Apply steel trowel finish to monolithic slab surfaces exposed to view or covered with resilient flooring or other thin film coating.
2. Consolidate concrete surface by troweling, free of trowel marks, uniform in texture and appearance.
3. Finish concrete to maximum tolerance of 1:500.
4. Finishing tolerances:
   a. For shored construction, measurements for conformance with finishing tolerances shall be made as soon as slab can tolerate foot traffic, and before shores are removed.
5. Thoroughly consolidate surface by hand troweling.
6. Leave finished surface essentially free of trowel marks, uniform in texture and appearance and plane to an Ff25/Fl20 tolerance.
7. On surfaces intended to receive floor coverings, grind off defects which would indicate through floor covering or burnished-over finished surfaces which inhibit adhesion of flooring adhesives.
8. On surfaces intended to receive waterproofing membranes grind off defects that might tear or otherwise damage membrane.

3.7 CLEANING OF CONCRETE

A. Clean cast-in-place concrete walls which will remain exposed to view.

1. Include walls which are scheduled for painting.

PART 4 - MEASUREMENT AND PAYMENT

4.1 MEASUREMENT

A. No separate measurement will be made for the requirements of this section unless otherwise provided for.

4.2 PAYMENT

A. No other separate payment will be made for the requirements of this section unless specifically noted for separate payment as stated herein. Full compensation for complying with the requirements of this section for furnishing all labor, materials, tools, equipment, and incidentals and for doing all the work involved in Concrete, shall be considered as included in contract prices paid for the various items of work involved, and no additional compensation will be allowed, therefore.

END OF SECTION

CONCRETE MIX DESIGN SUBMITTAL FORM

Project: _____

City: _____

General Contractor: _____

Concrete Contractor: _____

Concrete Strength Class: _____

Describe Use: _____

Based on Standard Deviation Analysis ☐

Trial Mix Test Data ☐

Design Characteristics

Density _____ PCF

Strength _____ PSI - 28 day

Air _____ Percent specified

Materials	**Type/Source**	**Specific Gravity**	**Weight** LB	**Absolute Volume** CU FT
Cement				
Fly Ash				
Slag				
Coarse Aggregate				
Fine Aggregate				
Water				
Air				
Other				
		Total		

* Water/Cementitious Ratio (lbs. water/lbs. cement) = _____ .

Admixtures	**Manufacturer**	**Dosage oz/cwt**
Water Reducer		
Air Entraining Agent		
High Range Water Reducer		
Non-Corrosive Accelerator		
Other		

Slump before HRWR _____ inches

Slump after HRWR _____ inches

Standard Deviation analysis (from Experience Records):

Number of Test Cylinders Evaluated: _____

Standard Deviation: _____

Use larger Value:

f'cr = f 'c + 1.34s or f 'cr = f 'c + 2.33s – 500 for 5000 psi or less

f 'cr = 0.90 f ‘c + 2.33s for higher strengths

(Refer to ACI 301 for increased deviation factor when less than 30 tests are available)

Laboratory Test Data				
Compressive Strength	**Age - Days**	**Mix 1 - PSI**	**Mix 2 - PSI**	**Mix 3 - PSI**
	7			
	7			
	28			
	28			
	28 Average			

F‘cr = f’c + 1200 psi for 5000 psi or less
Or 1.10 f’c + 700 psi for strengths higher than 5000 psi at 28 days

Required Attachments:	Check
Combined Aggregate Gradation Report	
Standard Deviation Analysis of compressive Strength Data or Trial Mixture Test Data	
Admixture Compatibility Certification Letter	

Submitted By:

Name: _____

Address: _____

_____

Phone No.: _____

Main Plant Location: _____

Miles from Project: _____

Secondary Plant Location: _____

Miles from Project: _____

Date: _____

END OF SUBMITTAL FORM

SECTION 04 05 10
MASONRY CLEANING

PART 1 - GENERAL

1.1 SUMMARY

A. Furnish labor, materials, tools, equipment, and services for Masonry Cleaning in accordance with provisions of Contract Documents.

B. Completely coordinate with work of other trades.

1.2 REFERENCES

1.3 SUBMITTALS

A. Product Data:

1. For each type of material and accessory.

B. Project Information:

1. Name of proposed product and manufacturer.
2. Certification that the proposed products are compatible with materials on subject project.

PART 2 - PRODUCTS

2.1 MANUFACTURERS

A. Cleaners:

1. Base:
   a. ProSoCo.
2. Optional:
   a. EaCo Chem.
   b. Diedrich.

2.2 MATERIALS

A. Use only products recommended by manufacturer of material to be cleaned.

B. Brick Masonry Cleaner:

1. Verify compatibility with brick manufacturer.
2. Red Brick:
   a. Base Product: Sure Klean Lime Solvent 101 by ProSoCo.
3. Light-colored, Chocolate-colored, Brown, Gray and other brick subject to metallic staining:
   a. Base Product: Sure Klean Vana Trol by ProSoCo.

C. Concrete Masonry (CMU) Cleaners:

1. Clean CMU which will remain exposed to view (including CMU walls scheduled for painting).
2. Lightweight and Normal Weight CMU:
   a. Base Product: Sure Klean Custom Masonry Cleaner by ProSoCo.

PART 3 - EXECUTION

3.1 EXAMINATION

A. Examine surfaces to be cleaned.

1. If necessary point with mortar.

B. Waiting Time before cleaning:

1. Test a small area to verify mortar is sufficiently cured. Listed periods are minimums.
2. Water only cleaning: Allow mortar to cure for 36 hours prior to cleaning.
3. Detergent cleaning: Allow mortar to cure for 3 days prior to cleaning.
4. Other cleaning methods: Allow mortar to cure for 7 days prior to cleaning.

C. Remove excess mortar using wooden paddles and scrapers.

D. Do not proceed with cleaning until unsatisfactory conditions have been corrected.

E. Test 4 x 4 feet area of each surface type for compatibility with cleaner, using recommended dilutions, prior to full scale cleaning operations.

F. Cleaning indicates acceptance of surfaces and responsibility for performance.

3.2 PREPARATION

A. Protect adjacent surfaces, not scheduled for cleaning.

B. Prepare surfaces as recommended by manufacturer.

3.3 CLEANING

A. Clean surfaces as recommended by manufacturer.

B. Do not use wire brushes.

C. Thoroughly rinse and pre-soak walls.

D. Flush loose mortar and dirt from surface.

E. Wet to prevent runoff streaking.

F. Apply solution using fibered wall washing brush or low-pressure spray.

1. Maximum Pressure: Not to exceed 400 psi.
2. Tip spray angle: Not less than 25 degrees.
3. Maximum rate of flow: 4 to 6 gpm.
4. Tip shall be held at least 12 inches from surface of masonry.
5. Comply with manufacturers' recommendations, where more restrictive.

G. Scrape off mortar and re-apply cleaning solution.

H. After scrubbing, clean thoroughly with low pressure water.

1. Comply with low-pressure spray criteria listed above.

PART 4 - MEASUREMENT AND PAYMENT

4.1 MEASUREMENT

A. No separate measurement will be made to meet the requirements of this section unless otherwise provided for.

4.2 PAYMENT

A. No separate payment will be made for the requirements of this section unless specifically noted for separate payment as stated herein. Full compensation for complying with the requirements of this section for furnishing all labor, materials, tools, equipment, and incidentals and for doing all the work involved in Masonry Cleaning, shall be considered as included in contract price paid for CMU Wall Repair, and no additional compensation will be allowed, therefore.

END OF SECTION

SECTION 04 22 00
CONCRETE MASONRY UNIT (CMU) REPAIR

PART 1 - GENERAL

1.1 SUBMITTALS

A. Product Data:

1. Reinforcing.
2. Grout Mix

1.2 REINFORCING

A. Reinforcing Bars (vertical and horizontal): Specified in Section 03 05 00.

B. In addition to the following general requirements, provide reinforcing size, type and spacing as indicated on Drawings and Details.

1.3 GROUT PATCH

A. Do not place grout until entire portion of wall repair is ready to be grouted.

B. Use mechanical vibrator to remove voids and to consolidate fill.

C. Where vertical or horizontal reinforcing bars are required, place and inspect prior to filling operation.

D. Flush grout patch with the existing face of the CMU wall.

PART 2 - NOT USED

PART 3 - NOT USED

PART 4 - MEASUREMENT AND PAYMENT

4.1 MEASUREMENT

A. CMU Wall Repair” shall be measured by the linear foot for all work required to complete the repairs as shown on the plans and as specified herein

4.2 PAYMENT

A. The contract price paid per linear foot for “CMU Wall Repair” shall include full compensation for furnishing all labor, materials, tools, equipment, and incidentals and for doing all the work involved in “CMU Wall Repair”, complete in place, including surface preparation, removal of damaged or deteriorated materials, grout, reinforcement, cleaning, patching, protection of adjacent surfaces, and disposal of waste materials, as shown on the plans, as specified in the Standard Specifications and these Special Provisions.

END OF SECTION

SECTION 05 12 00
STRUCTURAL STEEL

PART 1 - GENERAL

1.1 SUMMARY

A. Furnish labor, materials, tools, equipment, and services for Structural Steel, as indicated, in accordance with provisions of Contract Documents.

B. Completely coordinate with work of other trades.

1.2 QUALITY ASSURANCE

A. Standards:

1. American Institute of Steel Construction (AISC) Specifications for Design, Fabrication, and Erection of Structural Steel for Buildings and Commentary.
2. American Welding Society (AWS) Structural Welding Code.

B. Field verify dimensions before fabricating steel.

1.3 SUBMITTALS

A. Product Data:

1. For each type of material and accessory.

B. Shop Drawings:

1. Show shop and erection details including cuts, copes, connections, holes and welds.

PART 2 - PRODUCTS

2.1 MATERIALS

A. Steel: ASTM A36, A992, A913, A500-Grade B.

B. Bolts: ASTM A325.

C. Anchor bolts: ASTM F1554, grade 36.

2.2 SHOP PRIMING

A. Prime Paint:

1. Comply with SJI and AISC, except asphalt type paint is not acceptable.
2. Shop coat of red lead or rust-inhibitive paint standard with manufacturer.
3. Comply with SSPC-15.

PART 3 - EXECUTION

3.1 ERECTION

A. Erect structural steel in compliance with AISC Specifications.

B. Use erection equipment suitable and safe for workmen.

3.2 CLEAN

A. Touch-up prime paint after erection.

B. Clean field welds, bolted connections and abraded areas, and apply same type of paint as used in shop.

PART 4 - MEASUREMENT AND PAYMENT

4.1 MEASUREMENT

A. “Structural Steel (by type)” shall be measured by the unit. Quantities measured for payment will be calculated on the basis of the dimensions shown on the plans not by quantity placed.

B. “Existing Column Plumb and Repair” shall be measured by the unit. Quantities measured for payment will be calculated on the basis of the dimensions shown on the plans not by quantity placed.

C. “Existing Column Base Restraint” shall be measured by the unit. Quantities measured for payment will be calculated on the basis of the dimensions shown on the plans not by quantity placed.

4.2 PAYMENT

A. The contract price paid by the unit for “Structural Steel (by type)” shall include full compensation for furnishing all labor, materials, tools, equipment, and incidentals and for doing all the work involved in “Structural Steel (by type)” including Metal Fabrications, as shown on the plans, as specified in the Standard Specifications, Contract Drawings, and these Technical Specifications..

B. The contract price paid by the unit for “Existing Column Plumb and Repair” shall include full compensation for furnishing all labor, materials, tools, equipment, and incidentals and for doing all the work involved in “Existing Column Plumb and Repair” including Metal Fabrications, as shown on the plans, as specified in the Standard Specifications, Contract Drawings, and these Technical Specifications.

C. The contract price paid by the unit for “Existing Column Base Restraint” shall include full compensation for furnishing all labor, materials, tools, equipment, and incidentals and for doing all the work involved in “Existing Column Base Restraint” including Metal Fabrications, as shown on the plans, as specified in the Standard Specifications, Contract Drawings, and these Technical Specifications.

END OF SECTION

SECTION 05 50 00
METAL FABRICATIONS

PART 1 - GENERAL

1.1 SUMMARY

A. Furnish labor, materials, tools, equipment, and services for Miscellaneous Metal Fabrications, as indicated, in accordance with provisions of Contract Documents.

B. Completely coordinate with work of other trades.

1.2 REFERENCES

A. Referenced Standards:

1. ASTM International (ASTM):
   a. ASTM A27 Standard Specification for Steel Castings, Carbon, for General Application
   b. ASTM A36 Standard Specification for Carbon Structural Steel
   c. ASTM A53 Standard Specification for Pipe, Steel, Black and Hot-Dipped, Zinc-Coated, Welded and Seamless
   d. ASTM A148 Standard Specification for Steel Castings, High Strength, for Structural Purposes
   e. ASTM A325 Standard Specification for Structural Bolts, Steel, Heat Treated, 120/105 ksi Minimum Tensile Strength
   f. ASTM A500 Standard Specification for Cold-Formed Welded and Seamless Carbon Steel Structural Tubing in Rounds and Shapes
   g. ASTM A992 Standard Specification for Structural Steel Shapes
2. American Society of Mechanical Engineers (ASME):
   a. ANSI/ASME-A17.1 Handbook on Safety Code for Elevators and Escalators
3. American Institute of Steel Construction (AISC)
   a. Steel Construction Manual
4. American Iron and Steel Institute (AISI):
   a. Specification for the Design of Cold-Formed Steel Structural Members.
5. American Welding Society (AWS):
   a. ANSI/AWS C1.1M/C1.1 Recommended Practices for Resistance Welding
   b. ANSI/AWS D1.1 Structural Welding Code - Steel.
   c. ANSI/AWS D1.3 Structural Welding Code - Sheet Steel.
6. National Association of Architectural Metals Manufacturers (NAAMM):
   a. Class 1, Architectural, per NAAMM AMP-555, Code of Standard Practice for the Architectural Industry.

1.3 SUBMITTALS

A. Product Data:

1. For each type of material and accessory.

B. Shop Drawings:

1. Plans and elevations showing members and connections.
2. Anchors and accessory items.

C. Project Information:

1. Structural calculations for Miscellaneous Metals Fabrications indicating design conforms to specified design criteria, sealed by the Specialty Structural Engineer.

a. Submit concurrent with Shop Drawings.

1.4 QUALITY ASSURANCE

A. Standards:

1. American Institute of Steel Construction (AISC) Specifications for Design, Fabrication, and Erection of Structural Steel for Buildings and Commentary.
2. American Welding Society (AWS) Structural Welding Code.

B. Field verify dimensions before fabricating steel.

PART 2 - PRODUCTS

2.1 MANUFACTURERS

A. Materials Listed:

1. Base: As noted.

B. Galvanizing Repair Paint:

1. Base:
   a. Tnemec.
2. Optional:
   a. ZRC Worldwide.
   b. Sherwin-Williams.

2.2 MATERIALS

A. Structural Steel:

1. Structural W and T shapes: ASTM A992, 50 ksi yield point.
2. Other steel shapes and plate: ASTM A36.
3. Pipe: ASTM A53 Grade B.
4. Tubing: ASTM A500, Grade C, 50 ksi minimum.

B. Bolts:

1. ASTM A307, ASTM A325, ASTM A354.

C. Masonry Anchorage Devices:

1. Standard manufactured items.
2. Lead expansion shields for machine screws and bolts 1/4 inch and smaller: Head out embedded nut type.
3. For machine screws and bolts larger than 1/4 inch: Manufacturers' standard.
4. Bolt anchor expansion shields for lag bolts: Zinc alloy, long shield anchors.
5. Bolt anchor expansion shields for bolts: Closed end bottom bearing type.
6. Anchor to embed or set device in setting compound or epoxy grout where shown.

D. Non-shrink Grout:

1. Compressive strength: 8000 psi at 7 days.
2. Base Product: 1107 Advantage Grout by Dayton Superior.

2.3 FABRICATION

A. Form to shapes indicated with straight lines, sharp angles, and smooth curves.

B. Shop-fabricate in as large assemblies as practicable.

C. Anchorage Accessories:

1. Items required securing wood to metal, wood to masonry, metals to masonry or concrete, metal to metal or metal to other items.

D. Drill or punch holes with smooth edges for temporary field connections and attachment of work by other trades.

1. Conceal fastenings where practicable.

E. Make permanent shop and field connections with continuous fillet type welds.

1. Grind exposed welds smooth.

F. Supply items required to complete construction and installation.

G. Meet requirements specified under Structural Steel for fabricating items of structural nature or use.

2.4 FINISHES

A. Items not to receive coatings:

1. Surfaces scheduled to be fireproofed with spray-on material.
2. Machined surfaces.
3. Surfaces adjacent to field welds.
4. Contact surfaces of bolt connections at slip connections.
5. Top flanges of beams to receive shear connectors.
6. Items for which no coating or field finish is specified.

B. Shop Priming:

1. Prime Paint: Comply with AJI and AISC, except asphalt type of paint is not acceptable. Coordinate with field applied finish systems specified in Section 09 91 23.
2. Shop coat of red lead or rust-inhibitive paint standard with manufacturer.
3. Clean thoroughly before priming; remove mill scale, rust, dirt, oil, and grease in accordance with SSPC-SP3.

2.5 METAL FABRICATIONS

A. Steel Support Angles, Support Frames, and Loose Lintel Steel Members:

1. ASTM A36 steel, sizes and configurations as indicated.
2. Items to be hot dip galvanized:
   a. Items to be permanently exposed to weather, high humidity, or wet conditions.
   b. Items set into exterior walls.
3. Shop prime interior items not required to be galvanized.

PART 3 - EXECUTION

3.1 EXAMINATION

A. Verify suitability of substrate to accept installation.

B. Installation constitutes acceptance of responsibility for performance.

C. Verify wall backing has been installed for wall-mounted items specified in this Section.

3.2 INSTALLATION

A. General:

1. Set work level, true to line, plumb.
2. Weld field connections and grind smooth.
3. Conceal fastenings where practical.
4. Secure metal to wood with lag screws of adequate size with appropriate washers.
5. Secure metal to concrete with embedded anchors, setting compounds, caulking and sleeves, or setting grout.
   a. Use expansion bolts, toggle bolts, or screws for light duty service.

6. Meet structural requirements for erecting items of structural nature.
7. Do not field splice fabricated items unless size requires splicing.
8. Weld splices.
9. Provide fabricated items complete with attachment devices as required to install.

B. Galvanic Repair:

1. After galvanized units have been erected and anchored apply galvanizing repair paint in accordance with manufacturer's recommendations.
2. Surface preparation: Remove contaminates in accordance with SSPC SP-1.

3.3 TOUCH-UP AND REPAIR

A. Verify installations are neat and flush in appearance, and that there are no burrs, projections, or defects on exposed surfaces that might snag fingers or clothing. Correct deficiencies.

B. Touch-up damage to powder coat finishes in manner satisfactory to Owner.

C. Galvanic Repair:

1. After galvanized units have been erected and anchored apply galvanizing repair paint in accordance with manufacturer's recommendations.
2. Surface Preparation: Remove contaminates in accordance with SSPC SP-1.

PART 4 - MEASUREMENT AND PAYMENT

4.1 MEASUREMENT

A. "Metal Railings" shall be measured by the unit. Quantity shall be confirmed by submittal of Metal Railing shop drawings and will include all relevant connections, hardware, and fabrication items needed to conduct the work as outlined in the drawings.

B. "Prefabricated Ramp and Stairs" shall be measured by the unit. Quantity shall be confirmed by submittal of Prefabricated Ramp and Stairs product data and shop drawings provided to the Engineer by the "Prefabricated Ramp and Stairs" design professional.

C. No other separate measurement will be made for the requirements of this section unless otherwise provided for. Metal Fabrications shall be included in the measurement for Structural Steel.

4.2 PAYMENT

A. The contract price paid per unit for "Metal Railings" shall include full compensation for furnishing all labor, materials, tools, equipment, and incidentals and for doing all the work involved in Metal Railings, including all relevant connections and labor to install such connections, removing and disposing of existing Metal Railings, as shown on the plans, as specified in the Standard Specifications and these Special Provisions.

B. The contract price paid per unit for "Prefabricated Ramp and Stairs" shall include full compensation for furnishing all labor, materials, tools, equipment, hardware, and incidentals and for doing all the work involved in "Prefabricated Ramp and Stairs", as shown on the plans, as specified in the Standard Specifications and these Special Provisions.

C. No other separate payment will be made for the requirements of this section unless otherwise provided for.

END OF SECTION

SECTION 05 51 00
METAL STAIRS AND RAILINGS

PART 1 - GENERAL

1.1 SUMMARY

A. Furnish labor, materials, tools, equipment, and services for Steel Stairs and Railings, as indicated, in accordance with provisions of Contract Documents.

B. Completely coordinate with work of other trades.

1.2 REFERENCES

A. ASTM International:

1. ASTM A27 Standard Specification for Steel Castings, Carbon, for General Application
2. ASTM A36 Standard Specification for Carbon Structural Steel
3. ASTM A47 Standard Specification for Ferritic Malleable Iron Castings
4. ASTM A53 Standard Specification for Pipe, Steel, Black and Hot-Dipped, Zinc-Coated, Welded and Seamless
5. ASTM A148 Standard Specification for Steel Castings, High Strength, for Structural Purposes
6. ASTM A276 Standard Specification for Stainless Steel Bars and Shapes
7. ASTM A307 Standard Specification for Carbon Steel Bolts, Studs, and Threaded Rod 60 000 psi Tensile Strength
8. ASTM A325 Standard Specification for Structural Bolts, Steel, Heat Treated, 120/105 ksi Minimum Tensile Strength
9. ASTM A354 Standard Specification for Quenched and Tempered Alloy Steel Bolts, Studs, and Other Externally Threaded Fasteners
10. ASTM A480 Standard Specification for General Requirements for Flat-Rolled Stainless and Heat-Resisting Steel Plate, Sheet, and Strip
11. ASTM A484 Standard Specification for General Requirements for Stainless Steel Bars, Billets, and Forgings
12. ASTM A500 Standard Specification for Cold-Formed Welded and Seamless Carbon Steel Structural Tubing in Rounds and Shapes
13. ASTM A501 Standard Specification for Hot-Formed Welded and Seamless Carbon Steel Structural Tubing
14. ASTM A668 Standard Specification for Steel Forgings, Carbon and Alloy, for General Industrial Use
15. ASTM E303 Standard Test Method for Measuring Surface Frictional Properties Using the British Pendulum Tester

B. American Institute of Steel Construction (AISC)

1. Steel Construction Manual

C. American Iron and Steel Institute (AISI):

1. Specification for the Design of Cold-Formed Steel Structural Members.

D. American Welding Society (AWS):

1. ANSI/AWS D1.1 Structural Welding Code - Steel.
2. ANSI/AWS D1.3 Structural Welding Code - Sheet Steel.

E. National Association of Architectural Metals Manufacturers (NAAMM):

1. NAAMM AMP-555, Code of Standard Practice for the Architectural Industry

a. Class 1, Architectural.

2. NAAMM AMP 521, Pipe Railings Systems Manual, and NAAMM AMP-510, Metal Stairs Manual.

F. Workmanship Standards:

1. Railing System Joints: Continuous fillet weld. Type 1 Railing System Joint Construction.
2. Comply with National Ornamental & Miscellaneous Metals Association (NOMMA).

1.3 SUBMITTALS

A. Product Data:

1. For each type of material and accessory.

B. Shop Drawings:

1. Layout drawings indicating rise and run.
2. Include full sections, details, handrails, guardrails, and anchoring methods.

C. Project Information:

1. Structural calculations for handrails, guardrails and embeds indicating design conforms to specified design criteria, sealed by the Specialty Structural Engineer.
   a. Submit concurrent with Shop Drawings.

1.4 QUALITY ASSURANCE

A. Provide Steel Railings engineered to support dead, live, lateral, and seismic loads indicated:

1. Include calculations for load-bearing components of stairs and landings.
2. Required details defining method of fastening throughout system and attachments to supporting primary structure included in engineering requirement.
3. Physical adequacy of structural design and conformance with applicable building codes are responsibility of stair fabricator.

PART 2 - PRODUCTS

2.1 MANUFACTURERS

A. Stairs and Railing:

1. Shop fabricated railing.
2. Provide factory manufactured stair system in lieu of fabricated stairs, subject to review by Architect.

B. Galvanizing Repair Paint:

1. Base:
   a. Tnemec.
2. Optional:
   a. ZRC Worldwide.
   b. Sherwin-Williams.

C. Shop Primer:

1. Base:
   a. As recommended by finish coat manufacturer for substrate.
2. Optional:
   a. Sherwin-Williams.
   b. Tnemec.

D. Non-shrink Grout:

1. Base:
   a. Dayton Superior Corporation.
2. Optional:
   a. Sauereisen.
   b. CGM Building Products (Por-Rok).

E. Abrasive Warning Tape:

1. Base:
   a. 3M.
   b. Optional: Approved equal.

2.2 DESIGN CRITERIA

A. Design, fabricate, and install in compliance with applicable codes.

1. Enclosed Stairs: Commercial Class per latest edition NAAMM AMP-510, Metal Stairs Manual.
2. Non-enclosed and monumental stairs: Architectural Class per latest edition NAAMM AMP-510, Metal Stairs Manual.

B. Fabricate and design stair and landing assembly to support larger of following loads, whichever results in strongest components:

1. Design Concentrated Moving Load: 300 pounds.
2. Design Uniform Load: 100 psf.
3. Form surface with slip resistant materials.

C. Handrails and Guardrails:

1. Form to profiles indicated.
2. Utilize following loads for design of indicated members and their direct or indirect connection to building superstructure.
   a. Handrails and top rail of Guardrails, Uniform Load: 50 pounds/LF minimum applied in any direction.
   b. Handrails, Concentrated Load: 200 pounds minimum applied in any direction at any point along rail.
   c. Guardrail, Concentrated Load: 200 pounds minimum applied in any direction at any point along rail.
   d. Uniform and concentrated loads need not be concurrently applied.
3. Intermediate Rails, Balusters, Panels, and other Infill Materials:
   a. Design to withstand a horizontal applied normal load of 50 pounds minimum on an area not to exceed 1 square foot including openings and space between rails.

D. Support stairs at locations indicated.

2.3 MATERIALS

A. Hangers:

1. Minimum 1/2 inches diameter steel rod.
2. Connect hangers to beams only.
3. Hanger-slab connections are not permitted.
4. Maximum 2 inches eccentricity from beam centerline to hanger centerline.
5. Connect hangers to structure with through-bolt connections when in tension.
   a. Recess top plate and nut in slab and grout smooth.
6. Expansion anchor type connections in tension are not allowed.

B. Support Brackets and Posts:

1. Attach to structure as required, use welded connections wherever possible.
2. Use concrete expansion anchors for shear connections only.

C. Stringers:

1. Channel shape: MC12, minimum.
2. Plate stringer: 3/16 inches x 12 inches deep steel plate, minimum.
3. Design outside stringers to span flight length plus landing.
    a. Intermediate supports are not allowed without prior approval.

D. Treads:

1. Steel pans with angle supports as required.
    a. Minimum 14 GA thickness. Plain steel welded wire reinforcement.
    b. Fill will concrete specified in Division 03.
    c. Coordinate concrete finish with finish flooring.
2. Checker plate: Raised, medium pattern sheet steel.
3. Bar Grating with integral steel nosing and angle brackets, complying with NAAMM Metal Bar Grating Manual.
4. Slip-resistant Steel: Coating, not less than 70 per ASTM E303, permanently bonded to steel.

E. Risers:

1. Minimum 14 GA steel.

F. Landings:

1. Minimum 10 GA pans with angle supports as required.
2. Checker plate: Raised, medium pattern sheet steel.
3. Bar Grating with integral steel nosing, angle and channel brackets, complying with NAAMM Metal Bar Grating Manual.
4. Slip-resistant Steel: Coating, not less than 70 per ASTM E303, permanently bonded to steel.

G. Metal Lath:

1. Self-furring diamond mesh with dimples or embossed ribs.
2. Maintain metal lath, 1/4 inches minimum, above tread and landing steel pans.

H. Abrasive Warning Tape:

1. Base Product: Safety-Walk 630 General Purpose Tread by 3M.
2. Use at first and last stair nosings of stair runs.
3. Self-adhering tape with slip resistant mineral surface.
4. Color: Safety Yellow.
5. Color: Black.
6. Width: 2 inches, except where noted otherwise.
7. Thickness: 0.03 inches.
8. Do not use where rubber stair treads or carpet is scheduled.
9. Do not use at bar grating stairs.

I. Handrails:

1. Round Tube: HSS 1.66.x 0.140; ASTM A500.
2. Schedule 40 Pipe: 1-1/2 inches STD; ASTM A53.
3. Minimum Clearance from wall: 2-1/4 inches.
4. Maximum projection from wall: 4-1/2 inches.

5. Maximum span between mounting brackets and/or newel posts: 4 feet.
6. Return ends of wall mounted rails to wall.
7. Make rails smooth with no projections to prevent a hand from sliding along entire length.

J. Guardrails:

1. Increase sizes where appropriate to resist design loads.
2. Refer to drawings for depiction of guardrails.
3. Maximum span between mounting brackets and newel posts: 4 feet.
4. Newel posts:
   a. Round tube: HSS 1.66.x 0.140; ASTM A500.
   b. Round tube: Schedule 40 Pipe: 1-1/2 inches STD; ASTM A53.
5. Top rails and bottom rails:
   a. Round tube: HSS 1.66.x 0.140; ASTM A500.
   b. Round tube: Schedule 40 Pipe: 1-1/4 inches STD; ASTM A53.
6. Balusters/pickets:
   a. Definition: Vertical elements spanning between top rails and bottom rails in a guardrail panel.
   b. Round bar: 1/2 inches.
7. Intermediate Rails:
   a. Construct parallel to top and bottom rails and spanning the length of a guardrail panel.
   b. Use only in non-public areas.
   c. Round tube: HSS 1.50.x 0.083; ASTM A500.

K. Non-shrink Grout:

1. Compressive strength: 6,000 psi at 7 days.
2. Base Product: 1107 Advantage Grout by Dayton Superior Corporation.

L. Anchorage Devices:

1. Items required securing wood to metal, wood to masonry, metals to masonry, or concrete, metal-to-metal, or metal to other items.
2. Galvanized or stainless where built into exterior walls.
3. Select fasteners for type, grade, and class required.
4. Bolts and Nuts: Regular hexagon head ASTM A307, Grade A.
5. Lag Bolts: Square or octagonal head type.
6. Machine Screws: Zinc-Nickel plated steel.
7. Wood Screws: Flat head carbon steel.
8. Plain Washers: Round, carbon steel.
9. Lock Washers: Helical spring carbon steel.
10. Lead expansion shields for machine screws and bolts 1/4 inches as required to resist loads: Head out embedded nut type.
    a. For machine screws and bolts larger than 1/4 inches: Manufacturers' standard.

2.4 FABRICATION

A. Form to shapes indicated with straight lines, sharp angles, and smooth curves.

B. Drill or punch holes with smooth edges for temporary field connections and attachment by work of other trades.

C. Qualify welding processes and welding operators in accordance with American Welding Society.

D. Make permanent shop and field connections with continuous fillet type welds.

E. Grind exposed welds smooth and blend seamlessly into pipe.

F. Conceal fastenings where practicable.

G. Shop-fabricate in as large assemblies as practicable.

H. Meet requirements specified under Structural Steel for fabricating items of structural nature or use.

2.5 FINISHES

A. Hot Dip Galvanized (HDG) Coating for Exterior items:

1. Galvanize following items:
   a. Handrails, guardrails, and items installed outside building enclosure on site, roof, and walls.
   b. Items installed in wet or humid areas of greater than 70% RH, inside building.
   c. Apply HDG coating after cutting, drilling, grinding, welding and other fabrication has been completed.
2. Clean thoroughly prior to galvanizing.
3. Galvanize in accordance with ASTM A123.

B. Galvanizing Repair Coating:

1. Tnemec Series 94-H20 Hydro-Zinc.
2. ZRC Worldwide, Galvilite 221.
3. Sherwin Williams Zinc Clad III HS 100.

C. Finish Painting:

1. Exterior: Paint to match existing railing. Submit paint sample to owner for approval.

PART 3 - EXECUTION

3.1 EXAMINATION

A. Verify suitability of substrate to accept installation.

B. Installation constitutes acceptance of responsibility for performance.

C. Verify wall backing has been installed where required for handrails and similar wall-mounted items.

3.2 INSTALLATION

A. General:

1. Shim and grout as required to set work plumb, level, and true to line.
2. Weld field connections and grind smooth.
3. Conceal fastenings where practical.
4. Secure metal to wood with lag screws and washers.
5. Secure metal to concrete with embedded anchors, setting compounds, caulking and sleeves, or setting grout.
6. Meet design requirements for erecting structural components.
7. Do not field splice fabricated items unless size requires splicing.
8. Weld splices and grind smooth.
9. Provide fabricated items complete with attachment devices as required to install.

B. Galvanic Repair:

1. Repair abraded areas with galvanizing paint in accordance with manufacturer’s recommendations.
2. Surface preparation: Remove contaminates in accordance with SSPC SP-1.

C. Handrails:

1. Furnish handrails complete with brackets.
2. Coordinate locations and installation of wall backing.
3. Where posts are indicated to be set in sleeves, provide galvanized steel sleeves having a minimum wall thickness of 1/8 inches.
4. Set newels or balusters in sleeves with non-shrink grout.
5. Where setting is required for exterior, hold non-shrink grout back 1/4 inches from surface and fill flush with self-leveling sealant.

PART 4 - MEASUREMENT AND PAYMENT

4.1 MEASUREMENT

A. No separate measurement will be made for the requirements of this section. Metal Railings and “Prefabricated Ramp and Stairs” shall be included in the measurement of Section 05 50 00 - Metal Fabrications.

4.2 PAYMENT

A. No separate payment will be made for the requirements of this section unless specifically noted for separate payment as stated herein. Full compensation for complying with the requirements of this section for furnishing all labor, materials, tools, equipment, and incidentals and for doing all the work involved in Metal Railings and “Prefabricated Ramp and Stairs”, shall be considered as included in contract prices paid for the various items of work involved, and no additional compensation will be allowed, therefore.

END OF SECTION

SECTION 06 11 10
WOOD FRAMING AND SHEATHING

PART 1 - GENERAL

1.1 SUMMARY

A. Furnish labor, materials, tools, equipment, and services for Wood Framing and Sheathing, as indicated, in accordance with provisions of Contract Documents.

B. Completely coordinate with work of other trades.

1.2 SUBMITTALS

A. Product Data:

1. Engineered wood products.
2. Underlayment.
3. Metal framing anchors.
4. Construction adhesives.
5. Wood treatment data:
    a. Chemical treatment manufacturer's instructions for handling, storing, installing, and finishing treated materials.
    b. For each type of preservative treated wood product, include certification by treating plant stating type of preservative solution and pressure process used, net amount of preservative retained and compliance with applicable standards.
    c. For waterborne treated products, include statement that moisture content of treated materials were reduced to levels indicated before shipment to project site.
    d. For fire retardant treated wood products, include certification by treating plant that treated materials comply with specified standard and other requirements as well as data relative to bending strength, stiffness, and fastener holding capacities of treated materials.
6. Material test reports from a qualified independent testing agency indicating and interpreting test results relative to compliance of fire-retardant-treated wood products with requirements indicated.
7. Research or evaluation reports acceptable to authorities having jurisdiction that evidence following products compliance with building code:
    a. Engineered wood products.
    b. Metal framing anchors.
    c. Power driven fasteners.
    d. Fire-retardant treated wood.

B. Project Information:

1. Proof that framing installer has a minimum of five years of experience, including a list of last four wood framed buildings completed by installer.
2. Certification of fire retardant treated material.

C. Contract Closeout Information:

1. Certificate by framing installer that wood frame was constructed in accordance with project plans and specifications.

1.3 QUALITY ASSURANCE

A. Installer Qualifications:

1. Minimum five years of experience in wood frame construction similar in material, design, and extent indicated on Drawings.

B. Local Building Code shall govern when conflicts occur.

C. Dimension Lumber: US Product Standard PS20-10 American Softwood Lumber Standard.

D. Plywood Sheathing: US Product Standard PS1-07 Structural Plywood.

1. Oriented Strandboard Sheathing: US Product Standard PS2-04 Performance Standard for Wood Based Structural Use Panels.
2. AWC National Design Specification for Wood Construction and Supplement ANSI/AWC NDS.

E. Obtain engineered wood products from one source and by a single manufacturer.

F. Obtain each type of fire retardant treated wood product from one source and by a single producer.

PART 2 - PRODUCTS

2.1 MANUFACTURERS

A. Preservative Treated Materials:

1. Base:
   a. Hoover Treated Wood Products.
2. Optional:
   a. Arxada AG
   b. Kopper Performance Chemicals.
   c. Lonza Companies.
   d. Stella-Jones, Inc.
   e. Viance, LLC.
   f. Western Wood Preservers, Ltd.

B. Metal Framing Anchors:

1. Base:
   a. Simpson Strong-Tie
2. Optional:
   a. United Steel Products

2.2 DIMENSION LUMBER

A. Dimension Lumber - General:

1. Provide dimension lumber of grades indicated according to ALSC National Grading Rule (NGR) provisions of inspection agency indicated.
2. Inspection agencies and abbreviations used to reference include following:
   a. NELMA: Northeastern Lumber Manufacturers Association.
   b. NLGA: National Lumber Grades Association.
   c. RIS: Redwood Inspection Service.
   d. SPIB: Southern Pine Inspection Bureau.
   e. WCLIB: West Coast Lumber Inspection Bureau.
   f. WWPA: Western Wood Products Association.
3. Provide lumber with each piece factory marked with grade stamp of inspection agency evidencing compliance with grading rule requirements and identifying grading agency, grade, species, moisture content at time of surfacing, and mill.
4. For exposed lumber, furnish pieces with grade stamps applied to ends or back of each piece or omit grade stamps and provide grade compliance certificates issued by inspection agency.

5. Where nominal sizes are indicated, provide actual sizes required by DOC PS20 for moisture content specified.
    a. Where actual sizes are indicated, they are minimum dressed sizes for dry lumber.
6. Provide dressed lumber, S4S, unless otherwise indicated.
7. Provide dry lumber with 19 percent maximum moisture content at time of dressing for 2 inches nominal thickness or less, unless otherwise indicated.

B. Other framing not listed above:

1. Provide following grade and species:
    a. Grade: Construction, stud, or No.3.

C. Timbers:

1. For timbers of 5-inch nominal size and thicker, provide material complying with following requirements:

D. Miscellaneous Lumber:

1. Provide lumber for support or attachment of other construction, including rooftop equipment curbs and support bases, cant strips, bucks, nailers, blocking, furring, grounds, stripping and similar members.
2. Moisture content: 19 percent maximum for lumber items not specified to receive wood preservative treatment.
3. Grade: For dimension lumber sizes, provide No.3 or Standard grade lumber per ALSC's NGRs of any species. For board size lumber, provide No.3 Common grade per NELMA, NLGA or WWPA; No.2 grade per SPIB, or Standard grade per NLGA, WCLIB, or WWPA of any species.

2.3 FASTENERS

A. General:

1. Provide fasteners of size and type indicated that they comply with requirements specified for material and manufacture.
2. Where fasteners, nuts washers or connectors are in contact with pressure treated lumber, provide fasteners with a minimum hot-dip G90 galvanized coating per ASTM A153, ASTM B695, mechanical galvanized coating, silicon bronze, copper, and type 304or 316 stainless steel fasteners when stainless steel connectors are used.
3. Provide type 304and 316 stainless steel stainless steel fasteners at construction below grade, at swimming pools, where exposed to saltwater environments, and severe exterior applications.

B. Nails, wires, brads, and staples: FS FF-N-105.

C. Deformed-shank Nails for Sheathing:

1. Corrosion-resistant for exterior exposures.
2. Barbed or deformed shank.
3. Comply with ASTM F1667.

D. Power-driven fasteners: ICC ESR-1539.

E. Wood Screws:

1. Carbon steel, galvanized, conforming to ASME B18.6.1 IFI 502.

F. Lag screws or lag bolts:

1. Commercial steel, galvanized, conforming to ASME B18.2.1.

G. Bolts and Nuts:

1. Carbon steel, galvanized, conforming to ASTM A307, Grade-A; ASTM-F568M, Class 4,8 or less.

2. ASTM A563 hex nuts and flat washers.

H. Galvanized Bearing Plate for Shear Walls: ASTM A653.

I. Metal Framing Anchors:

1. Provide galvanized steel framing anchors of structural capacity, type and size indicated and as follows:
   a. Provide products for which model code research or evaluation reports exist that are acceptable to authorities having jurisdiction and that evidence compliance of metal framing anchors for application indicated with building code in effect for this project.
   b. Provide products with allowable design loads as published by manufacturer, which meet or exceed those indicated.
      1) Manufacturer's published values shall be determined from empirical data or by rational engineering analysis and demonstrated by comprehensive testing performed by a qualified independent testing agency.
   c. Galvanized steel sheet:
      1) Hot dip zinc-coated steel sheet complying with ASTM A653, coating designation as shown in the Application Matrix and Connection requirements.
   d. Structural, commercial, or lock-forming quality, as standard with manufacturer for type of anchor indicated.

PART 3 - EXECUTION

3.1 EXAMINATION

A. Examine areas to receive work.

B. Correct unsatisfactory conditions.

C. Start of work constitutes acceptance of responsibility for performance.

3.2 PREPARATION

A. Verify measurements, dimensions and drawing details before proceeding.

B. Coordinate location of furring, nailers, blocking, grounds, and similar supports for attached work.

C. Examine conditions under which work is to be installed.

D. Correct unsatisfactory conditions.

3.3 INSTALLATION - GENERAL

A. General:

1. Provide wood grounds, nailers, or blocking as required for attachment of other work and surface applied items.
2. Grounds: Dressed, key beveled lumber minimum 1-1/2-inch wide of thickness required to bring face of ground even with finish material.
3. Remove temporary grounds when no longer required.
4. Shim as required.
5. Discard material with defects that impair quality of rough carpentry.
6. Set rough carpentry to required levels and lines with members plumb, true to line, cut and fitted.
7. Fit rough carpentry to other construction; scribe and cope as required for accurate fit.
   a. Coordinate location of furring, nailers, blocking, grounds, and similar supports to allow attachment of other construction.
8. Apply field treatment complying with AWPA M4 to cut ends of preservative treated lumber and plywood.

9. Securely attach rough carpentry work to substrate by anchoring and fastening as indicated on Drawings and complying with following:
    a. CABO NER-272 for power driven staples, P-nails, and allied fasteners.
    b. Published requirements of metal framing anchor manufacturer.
10. Use common wire nails, unless otherwise indicated. Select fasteners of size that will not fully penetrate members where opposite side will be exposed to view or will receive finished materials.
    a. Make tight connections between members. Install fasteners without splitting wood; pre-drill as required.
11. Use hot-dip galvanized or stainless steel nails where rough carpentry is exposed to weather in-ground contact or in areas of high humidity.
12. Countersink nail heads on exposed carpentry work and fill holes with wood filler.
13. Comply with AWC's “Manual for Wood Frame Construction,” unless otherwise indicated.
14. Install engineered wood products to comply with manufacturer's written instructions.
15. Install framing members of size and at spacing indicated.
16. Do not splice structural members between supports.

3.4 PROTECTION – ENGINEERED PANEL PRODUCTS

A. Protect installed sheathings from moisture damage.
    1. Replace panels that show warped or swelling.

PART 4 - MEASUREMENT AND PAYMENT

4.1 MEASUREMENT

A. “Wood Blocking (by type)” shall be measured by the linear foot of framed, measured in place. Measurement shall be based on the actual length of roof constructed, including all framing members.

B. “Roof Plywood Replacement” shall be measured by the square foot of framed and sheathed area, measured in place. Measurement shall be based on the actual area of sheathing removal and construction, including all sheathing materials.

C. “Wall/Roof Anchorage Hardwares” will be measured for payment as a lump sum.

4.2 PAYMENT

A. The contract price paid per linear foot for “Wood Blocking (by type)” shall include full compensation for furnishing all labor, materials, tools, equipment, and incidentals and for doing all the work involved in “Wood Blocking (by type)”, complete in place, including lumber, engineered wood products, fasteners, hardware, connectors, blocking, anchorage, and all incidental materials, as shown on the plans, as specified in the Standard Specifications, Contract Drawings, and these Technical Specifications.

B. The contract price paid per square foot for “Roof Plywood Replacement” shall include full compensation for furnishing all labor, materials, tools, equipment, and incidentals and for doing all the work involved in “Roof Sheathing”, complete in place, including removal of sheathing, new lumber, sheathing panels, fasteners, hardware, connectors, and all incidental materials, as shown on the plans, as specified in the Standard Specifications, Contract Drawings and these Technical Specifications.

C. The contract lump sum price paid for “Wall/Roof Anchorage Hardwares” shall include full compensation for furnishing all labor, materials, tools, equipment, and incidentals, and for doing all the work involved in “Wall/Roof Anchorage Hardwares” including wall ties, continuity ties and straps, as specified these Technical Specifications, the Contract Drawings, and as directed by the Engineer.

END OF SECTION

SECTION 07 31 13
ASPHALT SHINGLES

PART 1 - GENERAL

1.1 SUMMARY

A. Furnish labor, materials, tools, equipment, and services for Fiberglass Shingle Roofing in accordance with provisions of Contract Documents.
B. Completely coordinate with work of other trades.

1.2 REFERENCES

A. ASTM International (ASTM):
   1. ASTM D3018 Standard Specification for Class A Asphalt Shingles Surfaced with Mineral Granules.
   2. ASTM D3462 Standard Specification for Asphalt Shingles Made from Glass Felt and Surfaced with Mineral Granules.
B. National Roofing Contractors Association (NRCA):
   1. NRCA Steep Roofing Manual.
C. Fire resistance: UL Class A.

1.3 SUBMITTALS

A. Product Data:
   1. For each type of material and accessory.
B. Shop Drawings:
   1. Complete layout indicating types of roofing, anchorage, sections of flashing and trim conditions, cut openings and accessories.
   2. Coordinate with flashing work.
C. Samples:
   1. For color selection.
D. Project Information:
   1. Manufacturer’s installation instructions and recommendations.
E. Contract Closeout Information:
   1. Warranty.

1.4 QUALITY ASSURANCE

A. Installer Qualifications:
   1. Roofing installer shall have a minimum of two years’ experience of installation of Fiberglass Shingle Roofing and show evidence of successful completion of at least 3 projects of similar size, scope, and complexity.
B. Design tile fastening system to resist seismic forces.
C. Design roof system, including roof covering and metal edge securement to satisfy requirements of applicable building codes including local amendments:
   1. Design system to withstand winds of [<130] MPH.
   2. Design Roof System and anchorage to meet Design Loads.
      a. Wind Loads: Use the greater of the following:
         1) Wind Pressures as required per local building code based on wind speed, exposure factor and importance factor noted in the Structural Drawings.
         2) 45 psf minimum.

1.5 WARRANTY

A. Manufacturer standard twenty (20) year warranty covering waterproof integrity of installed roof, that asphalt shingle roofing and accessories are free of defects at time of delivery and manufactured to meet manufacturer published physical properties and material specifications. Warranty to date from substantial completion.
B. Installer to certify that asphalt shingle roofing and accessories have been installed in accordance with manufacturer recommendations.

PART 2 - PRODUCTS

2.1 MANUFACTURERS

A. Shingles:
   1. Base:
      a. GAF.
   2. Optional:
      a. CertainTeed Roofing Products.
      b. Georgia Pacific.

B. Match existing roof shingles. Contractor to provide BOD based off existing asphalt shingles.

2.2 MATERIALS

A. Shingles:
   1. Fiberglass reinforced asphalt.
   2. 325 pound/SQ, minimum.
   3. ASTM D3018 Type 1, Self-sealing.
   4. Mineral granule surfaced.
   5. Base: Timberline by GAF.
   6. Color as selected.

B. Underlayment:
   1. Non-woven polypropylene water barrier.
   2. Slip resistant surface.
   3. Permeability: 16 US perms.
   4. Base Product: Deck Armor by GAF.

C. Flashing: See Section 07 62 00, minimum 24 inches wide.

D. Sheathing: See Section 06 11 10, minimum 5/8 inches thick preservative treated plywood.

E. Roofing Cement: ASTM D4586 Type I or II.
   1. Asphaltic plastic.
   2. Provide bird and rodent screen.
   3. Size: 60 square inches
   4. Color: Match Existing
   5. IR-61 by Master Flow.

F. Fasteners:
   1. Stainless steel or zinc coated nails for roofing use.
   2. Large head and barbed, diamond point, minimum 11 GA.
   3. Length as required.
   4. Integral capped nails may be used.
      a. Base: Simplex.

G. Lap Cement: Fibrated cutback asphaltic type.

H. Provide one additional square of shingles.

PART 3 - EXECUTION

3.1 EXAMINATION

A. Verify suitability of substrate to accept installation.

B. Correct deficiencies.

C. Installation constitutes acceptance of substrate and responsibility for performance.

3.2 INSTALLATION

A. Do not overload structure with staged materials or other installation operations.

B. Begin work only when weather conditions are within manufacturer’s requirements.

C. Begin work only after substrate construction and penetrating work have been completed and curbs, blocking, nailer strips and other items have been installed.

D. Underlayment:
   1. Install underlayment continuous over roof areas.
   2. Lay parallel to ground.
   3. Extend up vertical surfaces minimum 6 inches.
   4. Lay minimum 4 inches wider than and over gutter and valley metal.

5. Lap sides minimum 4 inches, ends minimum 6 inches.

E. Flashings:
   1. Line valleys.
   2. Extend up vertical surfaces minimum 6 inches.
   3. Extend under shingles minimum 6 inches.
   4. Counterflashing as required to maintain watertight installation.
   5. Provide galvanized or non-ferrous edge metal at edges.
   6. Install in accordance with NRCA recommendations.

F. Plastic Cement:
   1. For gable rakes and hip rolls.

G. Shingles:
   1. Install in accordance with National Roofing Contractors Association Steep Roofing Manual.
   2. General:
      a. Place asphalt shingles in straight coursing pattern parallel with eaves, lapped per manufacturer's instructions.
      b. Project edge of shingles 1/2 inches at eaves and gable ends.
      c. Place nails to not pierce flashing.
      d. Nail shingles in place in accordance with manufacturer recommendations.
      e. No exposed nails are permitted.
      f. Build in metal flashing as shingles are being laid.
      g. Neatly fit shingles to and around abutting vertical surfaces.
   3. Hips and Ridges:
      a. Cap hips and ridges with individual shingles maintaining 5 inches weather exposure.
      b. Place to avoid exposed nails.
   4. After installation, place one dab of plastic cement 1 inch diameter under each tab and edge exposed to weather to prevent lifting where shingle's self-sealing feature is compromised.
   5. Perform required final adjustments and sealing and flashing required for watertight installation.

PART 4 - MEASUREMENT AND PAYMENT

4.1 MEASUREMENT

A. "Roof Replacement (By Type)" shall be measured by the square foot of roofing area, measured in place. Measurement shall be based on the actual area of roofing removal and construction, including all roofing materials

4.2 PAYMENT

A. The contract price paid per square foot for "Roof Replacement (By Type)" shall include full compensation for furnishing all labor, materials, tools, equipment, and incidentals and for doing all the work involved in "Asphalt Shingles", complete in place, including removal of roofing, new material, fasteners, hardware, connectors, and all incidental materials, as shown on the plans, as specified in the Standard Specifications, Contract Drawings and these Technical Specifications.

END OF SECTION

SECTION 07 84 00
FIRESTOPPING

PART 1 - GENERAL

1.1 SUMMARY

A. Furnish labor, materials, tools, equipment, and services for Firestopping, in accordance with provisions of Contract Documents.

B. System Description:

1. Through Penetration Firestop Systems for protection of penetrations through following fire resistance rated assemblies, including both blank openings and openings containing penetrating items:
   a. Wall and partition assemblies.
   b. Fire rated smoke barrier assemblies.
   c. Existing, fire and smoke rated assemblies.
   d. Construction enclosing compartmentalized areas.
2. Fire Resistive Joint Assemblies for linear voids where fire rated floor, roof, or wall assemblies abut one another, including following types of joints:
   a. Top and bottom of wall interface with overhead roof or floor structure:
      1) Select products to maintain acoustical, smoke and fire ratings indicated.
   b. Floor-to-wall joints where a floor structure intersects a wall structure.
   c. Control joints within or between wall structures.

C. Completely coordinate with work of other trades.

1.2 REFERENCES

A. UL:

1. UL 263, Fire Tests of Building Construction and Materials
2. UL 723, Surface Burning Characteristics of Building Materials
3. UL 1479, Fire Tests of Through Penetration Firestops
4. UL 1489, Fire Tests of Fire Resistant Pipe Protection Systems Carrying Combustible Liquids
5. UL 2079, Tests for Fire Resistance of Building Joint Systems
6. UL Fire Resistance Directory:
   a. Through Penetration Firestop Systems (XHEZ).
   b. Joint Systems (XHBN).
   c. Fill, Void, or Cavity Materials (XHHW).
   d. Firestop Devices (XHJI).
   e. Forming Materials (XHKU).
   f. Wall Opening Protective Materials (CLIV).
   g. Fire Resistance Ratings (BXRH)

B. ASTM International (ASTM):

1. ASTM E84 Surface Burning Characteristics of Building Materials
2. ASTM E119 Fire Tests of Building Construction and Materials
3. ASTM E136 Test Method for Behavior of Materials in a Vertical Tube Furnace at 750F
4. ASTM E814 Fire Tests of Through Penetration Fire Stops
5. ASTM E1399 Cyclic Movement and Measuring the Minimum and Maximum Joint Widths of Architectural Joint Systems

6. ASTM E1725, Standard Test Method for Fire Tests of Fire Resistive Barrier Systems for Electrical System Components.
7. ASTM E1966 Test Method for Fire Resistive Joint Systems
8. ASTM E2174 Standard Practice for On-site Inspection of Installed Fire Stops
9. ASTM E2307 Standard Test Method for Determining the Fire Endurance of Perimeter Fire Barrier Systems Using the Intermediate-Scale, Multi Story Test Apparatus (ISMA)
10. ASTM E2393 Standard Practice for On-site Inspection of Installed Fire Resistive Joint Systems and Perimeter Fire Barriers
11. ASTM G21 Standard Practice for Determining Resistance of Synthetic Polymeric Materials to Fungi

C. National Fire Protection Association (NFPA):

1. NFPA 70 National Electrical Code
2. NFPA 101 Life Safety Code
3. NFPA 221 Standard for High Challenge Fire Walls, Fire Walls, and Fire Barrier Walls
4. NFPA 251 Fire Tests of Building Construction and Materials

D. Firestop Contractors International Association (FCIA):

1. FCIA Firestop Manual of Practice (MOP).

E. International Firestop Council (IFC):

1. Recommended IFC Guidelines for Evaluating Firestop Engineering Judgments.
2. Inspectors Field Pocket Guide.

1.3 SUBMITTALS

A. Product Data:

1. Product technical data, including:
   a. Manufacturer’s listed design number.
   b. Manufacturer's installation instructions.
   c. Manufacturer’s specification and technical data for each material including the
   d. composition and limitations.
   e. Data sheet for all products and accessories used.

B. Shop Drawings:

1. Detailed drawings of special conditions:
   a. Provide UL listing for each type of firestopping assembly to be used.
   b. When UL listing is not available, provide a written Engineering Judgment in accordance with IFC Recommended Guidelines.
      1) Engineering Judgments shall be sealed by a Fire Protection Engineer licensed in [the state the project is located in].

C. Project Information:

1. UL reports with illustration of systems, system numbers, temperature ratings, and products proposed for use on project.
2. Contractor Certification per [FM 4991,] UL, HAFSC, or all.
3. Contractor Certification as UL Qualified Firestop Contractor.

D. Contract Closeout Information:

1. Provide electronic PDF file of firestop documentation to include following:
   a. Written statement that all fire-rated penetrations have been sealed using products specified in accordance with UL [and FM] requirements for required rating.
   b. Documentation of all listed systems installed and all engineering judgments.

c. Firestop system photograph of each type.
d. Installation log.
e. IFC guidelines for Engineering Judgments.
f. Building Code sections relevant to firestop systems.

2. Provide documentation of Special Inspection of Firestopping.

1.4 QUALITY ASSURANCE

A. Installer Qualifications:

1. Certified, licensed or approved by firestopping manufacturer, trained to install firestop products per specified requirements.
2. Licensed by State or local authority, where applicable.
3. Shown to have successfully completed not less than 5 comparable scale projects.
4. FM Approved in accordance with FM Standard 4991 – Approval of Firestop Contractors.
5. UL Qualified Firestop Contractor.

B. Identification Labels for Firestop Assemblies:

1. Follow guidelines set in Chapter 7 of International Building Code.

C. Identification Labels for Firestop Penetrations:

1. Label penetration on both sides of wall or slab.
2. Label each penetration or group of similar penetrations with a permanent label marked with the following information:
   a. UL system number.
   b. Rating.
   c. Products used.
   d. Installation date.
   e. Installer name.
   f. Penetration reference number unique to each location.

D. Pipe insulation shall not be removed, cut away or otherwise interrupted at wall penetrations or floor openings.

1. Provide products appropriately tested for the thickness and type of insulation utilized.

E. Cabling where frequent cable moves, additions, and changes are likely to occur in future:

1. Where cable trays are used:
   a. Utilize re-enterable products (e.g., removable intumescent blocks) specifically designed for retrofit.
2. Where cable trays are not used:
   a. Utilize fire rated cable pathway devices.
   b. Where not practical, re-enterable products designed for retrofit may be used.

F. Protect penetrations passing through fire resistance rated floor-to-ceiling assemblies contained within chase wall assemblies with products tested by being fully exposed to fire outside of chase wall.

1. Identify systems within UL Fire Resistance Directory with the words: Chase Wall Optional.

G. Fire-resistive Joint Sealant:

1. Provide flexible fire resistive joint sealants to accommodate normal and thermal building movement without seal damage.
2. Provide fire resistive joint sealants designed to accommodate a specific range of movement.

a. Test in accordance with cyclic movement test criteria as outlined in: ASTM E1399, ASTM E1966 or UL 2079.

3. Provide fire resistive joint systems subjected to an air leakage test.
   a. Conduct in accordance with UL 2079, with published L-Ratings for ambient and elevated temperatures.
4. Coordinate firestopping with acoustical sealant requirements in Section 07 92 16.

H. Subject smoke barrier containment systems to air leakage test.
1. Conduct in accordance with UL 1479, with published L-Ratings for ambient and elevated temperatures.

PART 2 - PRODUCTS

2.1 MANUFACTURERS

A. Firestopping:
1. Base:
   a. Hilti Inc.
2. Optional:
   a. 3M
   b. Rectorseal.
   c. Specified Technologies, Inc.
   d. Tremco, Inc.
   e. United States Gypsum Company.

B. Forming Materials:
1. Base:
   a. Hilti Inc.
2. Optional:
   a. Rockwool.
   b. Thermafiber.

C. Fire Rated Enclosures:
1. Base:
   a. Tenmat, Inc.
2. Optional:
   a. EZ Barrier, Inc.

2.2 DESIGN CRITERIA

A. Provide firestop systems in compliance with following requirements:
1. Obtain firestop system for each type of penetration and construction condition from a single firestop systems manufacturer.
2. Firestop products and systems shall bear classification marking of qualified testing and inspection agency.
3. Firestopping tests, performed by qualified, testing and inspection agency.
   a. UL or other agency, performing testing and follow up inspection services for firestop systems, acceptable to local authorities having jurisdiction.
4. Existing applications for which no tested and listed classified system is available through a manufacturer:
   a. Provide Engineering Judgment or Equivalent Fire Resistance Rated Assembly (EFRRA) for submittal derived from similar UL system designs or other tests approved by local authorities having jurisdiction, prior to installation.

b. Engineering judgment drawings must follow requirements set forth by International Firestop Council.
c. Fire Protection Engineer providing Engineering Judgements to be NFPA Certified.

5. Mold Resistance:
   a. Less than 1 per ASTM G21.
6. Inspect applied firestopping systems in accordance with California Building Code (IBC) Chapter 7.

2.3 MATERIALS

A. Through Penetration Firestop Systems:
   1. VOC content not to exceed 250 g/L.
   2. Base Products:
      a. FS-ONE MAX Intumescent Firestop Sealant.
      b. CFS-S SIL GG Elastomeric Firestop Sealant.
      c. CFS-S SIL SL Elastomeric Firestop Sealant.
      d. CP 620 Fire Foam.
      e. CP 606 Flexible Firestop Sealant.

B. Fire Resistive Joints:
   1. VOC content not to exceed 250 g/L.
   2. Base Products:
      a. CFS-SP WB Firestop Joint Spray.
      b. CFS-S SIL GG Elastomeric Firestop Sealant.
      c. CFS-S SIL SL Elastomeric Firestop Sealant.
      d. CP 606 Flexible Firestop Sealant.
   3. Coordinate with pre-applied firestopping in Section 09 22 16.

C. Firestop Putty:
   1. Intumescent, non-hardening, water resistant putties containing no solvents, inorganic fibers, or silicone compounds.
   2. Provide firestop putty at, but not limited to, the gap between wire, cabling, or both, exiting an open end of conduit, where conduit penetrates one or both sides of a smoke or fire rated wall assembly.
   3. Base products:
      a. CP 618 Firestop Putty Stick.
      b. CFS-PL Firestop Plug.

D. Through Penetration Firestop Systems:
   1. Comply with building code and fire code as locally adopted and amended.
   2. Requirements for single membrane penetrations and through penetration firestops are identical.
      a. Unless otherwise noted, treat penetrants which pass through a single membrane same as though passed through entire fire resistive assembly.
   3. Select each firestop system based on actual field conditions, including penetration type, shape, size, quantities, and physical position within opening.
   4. See Drawings for indication of the required ratings of fire resistive wall, floor, and roof assemblies.
      a. Indicated ratings are minimum and may be exceeded.
   5. Firestop assemblies at fire rated walls:
      a. Minimum fire (F) rating for firestop assemblies in walls shall equal that of wall, but not less than 1 hour.

b. Minimum temperature (T) rating of firestop assemblies in walls may equal zero.
c. Smoke barrier:
1) In addition to (F) rating, (L) rating of maximum 5 cfm/SF.
d. Non-rated walls and smoke partitions with no fire resistive requirement:
1) Assembly with (L) rating.

6. Firestop assemblies at fire rated floors and roofs:
a. Minimum fire (F) and temperature (T) ratings of firestop assemblies used in floors or roof shall equal hourly rating of floor or roof being penetrated, but not less than 1 hour.
1) Exception 1: T-rating may equal zero when portion of penetration, above or below floor, is contained within a wall.
2) Exception 2: Firestops are not required for floor penetrations within a 2-hour rated shaft enclosure.

PART 3 - EXECUTION

3.1 PREPARATION

A. Examine areas and conditions under which work is to be performed and identify conditions detrimental to proper or timely completion.

B. Surfaces to which firestop materials will be applied shall be free of dirt, grease, oil, scale, laitance, rust, release agents, water repellents, and any other substances that may inhibit optimum adhesion.

C. Provide masking and temporary covering to prevent soiling of adjacent surfaces by firestopping materials.

D. Do not proceed until unsatisfactory conditions have been corrected.

3.2 INSTALLATION

A. Install firestop systems in accordance with manufacturer's instructions and conditions of testing and classification as specified in UL or other acceptable third party testing agency listing.

B. Protect materials from damage on surfaces subjected to traffic.

C. Identification Labels:

1. Identify each firestop assembly as defined in Quality Assurance.
2. Do not locate identification labels, tags, or both, on finished surfaces and where exposed to view by public.

3.3 IDENTIFICATION

A. Provide identification in accordance with FCIA MOP and FM 4991.

1. Identify firestop systems with pressure-sensitive, self-adhesive, preprinted labels.
2. Attach labels permanently to surfaces of construction on both sides of each firestop system installation where labels will be visible to anyone seeking to remove penetrating items or firestop systems.
3. The following information shall be on the label:
a. Firestop Joint Systems:
1) The words "Warning-Firestop System-Do Not Disturb. Notify Building Management of Any Damage."
b. Through-Penetration Firestop Systems:
1) The words "Warning-Through Penetration Firestop System-Do Not Disturb. Notify Building Management of Any Damage."
c. Installing Contractor's name and Contact Information.
d. Through-Penetration firestop listing designation.
e. Date of Installation.

f. Through-Penetration firestop system manufacturer.

g. Installer's Name.

3.4 FIELD QUALITY CONTROL

A. Provide Special Inspection of all firestopping in accordance with CBC Chapter 7.

1. Owner shall engage a qualified independent inspection agency to inspect firestop systems in accordance with ASTM E2174, Standard Practice for On-site Inspection of Installed Fire Stops, and ASTM E2393, Standard Practice for On-Site Inspection of Installed Fire Resistive Joint Systems and Perimeter Fire Barriers.

B. Construct mock up on site to include typical through penetration and fire resistive joint applications for project.

C. Maintain areas of work accessible until inspection by authorities having jurisdiction.

D. Where deficiencies are found, repair or replace assemblies to comply with requirements.

3.5 ADJUSTING AND CLEANING

A. Remove equipment, materials, and debris, leaving area in undamaged, clean condition.

B. Clean surfaces adjacent to sealed openings free of excess materials and soiling as work progresses.

C. Perform patching and repair of firestopping systems damaged by other trades.

PART 4 - MEASUREMENT AND PAYMENT

4.1 MEASUREMENT

A. "Firestopping" shall be measured by the lump sum. Quantity shall be confirmed by submittal total number of patch penetrations needed based on field conditions.

4.2 PAYMENT

A. The contract price paid per lump sum for "Firestopping" shall include full compensation for furnishing all labor, materials, tools, equipment, and incidentals and for doing all the work involved in "Firestopping", as specified by these Technical Specifications, and as directed by the Engineer.

END OF SECTION

SECTION 07 92 13
EXTERIOR JOINT SEALANTS

PART 1 - GENERAL

1.1 SUMMARY

A. Furnish labor, materials, tools, equipment, and services for Exterior Joint Sealants, as indicated, in accordance with provisions of Contract Documents.

B. Related materials specified elsewhere:

1. Firestopping: Specified in Section 07 84 00.

C. Completely coordinate with work of other trades.

1. Ensure materials in this Section are compatible with adhesives, sealants, and adjacent materials.

1.2 REFERENCES

A. ASTM International (ASTM):

1. ASTM C510 Standard Test Method for Staining and Color Change of Single- or Multicomponent Joint Sealants
2. ASTM C920 Standard Specification for Elastomeric Joint Sealants
3. ASTM C1193 Standard Guide for Use of Joint Sealants

1.3 SUBMITTALS

A. Shop Drawings:

1. Sealant Schedule with the following information:
   a. General description of locations requiring sealants (i.e. Brick to Aluminum Window).
   b. List type of sealant and name of product proposed for each location.
   c. Include a blank Color Column on schedule for selection.
   d. Architect to complete Color Column upon selection from submitted samples.

B. Product Data:

1. Performance characteristics and limitations.
2. Recommended installation.

C. Samples:

1. Cured sample of each color. Submit with Sealant Schedule.

D. Contract Closeout Information:

1. Field Quality Control Test and Inspection Reports.
2. Warranty.

1.4 QUALITY ASSURANCE

A. Caulk and Caulking are synonymous with sealant work.

B. Paving Joints include joints in floor slabs, sidewalks, steps, ramps, and curbs.

C. Seal joints which would otherwise permit penetration of moisture or air, unless sealant work is specifically required under other Section.

D. Provide sealant at following locations:

1. Flashing reglets and retainers.
2. Exterior wall joints.
3. Masonry control joints, and between masonry and other materials.

4. Isolation joints.
5. Joints between paving or sidewalks and building.
6. Joints at penetrations of walls, floors, and decks by piping and other services and equipment not requiring firestopping.
7. Perimeters of door and window frames, louvers, grilles, etc.
8. Joints between dissimilar materials, to provide visually acceptable closures.
9. Solidly bed thresholds at exterior doors.
10. Other joints where caulking, or sealant is indicated.

E. Staining Potential of adjacent materials caused by sealants:

1. Pre-test proposed sealants where sealants are used with any of following materials:
   a. Brick Masonry.
   b. Manufactured Stone Masonry.
   c. Concrete Masonry.
2. Test Method: ASTM C1248 Standard Test Method for Staining of Porous Substrate by Joint Sealants.
3. Historical testing using same materials and cataloged by sealant manufacturer will be considered acceptable.
4. Where testing suggests that staining potential exists: Reselect sealant and retest.
5. Certify that staining potential has been evaluated.

1.5 WARRANTY

A. Provide written warranty that sealant work will remain free of defects for a period of 3 years from Date of Substantial Completion:

1. Failure of water or air tightness constitutes defect.
2. Loss of adhesion, cohesion, or failure to cure constitutes defect.
3. Remove defective work and materials and replace with new work and materials.
4. Non-prorated warranty to include labor and material.
5. Warranty signed by Installer, Contractor, or both.

PART 2 - PRODUCTS

2.1 MANUFACTURERS

A. Silicone Sealant:

1. Base:
   a. Pecora Corporation.
2. Optional:
   a. Dow.
   b. GE Silicone by Momentive Performance Materials.
   c. Sika Corporation.
   d. Tremco.

B. Polyurethane Sealants:

1. Base:
   a. Pecora Corporation.
2. Optional:
   a. Master Builders Solutions.
   b. Sika Corporation.

C. Silane-Modified Polymer Sealant (STPE, STPU, Polyurea):

1. Base:
   a. Pecora Corporation.
2. Optional:
   a. Master Builders Solutions.
   b. Tremco.

D. Other Sealants:

1. Base: As indicated.

E. Pre-molded Compressible Sealant:

1. Base:
   a. Emseal.
2. Optional:
   a. Master Builders Solutions.
   b. Construction Specialties.
   c. Erie Metal Specialties.
   d. Nystrom.
   e. Willseal by Tremco.

2.2 MATERIALS

A. Elastomeric Sealants:

1. ASTM C920 Type S or M, Grade-NS at vertical joints, Grade-P or –NS at horizontal joints, minimum Class as scheduled.
2. Non-staining sealant complying with ASTM C1248.
3. Where sealant is not exposed to view, use manufacturer's standard color which has best performance.
4. Before use of sealant, investigate its compatibility with surfaces, fillers, and other materials in joint system.
5. Refer to Sealant Selection Guide for Base Products.
6. Comply with lowest VOC limits as required by local laws and sustainable design requirements, if any.
7. VOC content no greater than 250 g/L.

B. Pre-molded Compressible Sealant:

1. Foam backing: Multiple layers of acrylic-impregnated, expanding foam sealant and closed-cell (EVA) foam.
2. Weather Facing: Low-modulus silicone with bellows profile.
3. Movement capability: +/-50% movement.
4. Material to be sized appropriately for joint widths indicated.
5. Select color from manufacturer's standard line.
6. Base Product: Seismic ColorSeal by Emseal.

C. Compressible Backer:

1. Foam backing with multiple layers of acrylic-impregnated, expanding foam sealant.
2. Provide behind conventional backer-rod and sealant where indicated.
3. Movement capability: +/- 25% movement.
4. Material to be sized appropriately for joint widths indicated.
5. Base Product: Backerseal by Emseal.

D. Installation Adhesive:

1. As recommended by manufacturer of compressible sealants and backers.
2. Comply with VOC limits as required by local laws.

E. Joint Primer:

1. As recommended by sealant manufacturer.
2. Sealant primers for nonporous surfaces as recommended by manufacturer with a VOC content no greater than 250 g/L.
3. Sealant primers for porous surfaces as recommended by manufacturer with a VOC content no greater than 775 g/L.

F. Backer Rod:

1. Polyethylene, polyethylene jacketed polyurethane foam, flexible, non-absorbent, non-bituminous material recommended by sealant manufacturer.

PART 3 - EXECUTION

3.1 EXAMINATION

A. Do not proceed with installation of joint sealants under following conditions:

1. When ambient and substrate temperature conditions are outside limits permitted by joint sealant manufacturer or are below 40 degrees F.
2. When joint substrates are wet.

B. Do not proceed with installation of joint sealants where joint widths are less than those allowed by joint sealant manufacturer for applications indicated.

C. Apply only to joints free of material which may inhibit bond.

D. Apply to cementitious materials only when thoroughly cured and dry.

3.2 PREPARATION

A. Clean joints and prime as required by sealant manufacturer.

B. Install sealant after finish coating or covering is scheduled to be applied.

C. Limit application to surfaces to receive sealants and mask edges of joints to protect adjacent surfaces.

3.3 INSTALLATION

A. Install sealant backings of kind indicated to support sealants during application and at position required to produce cross-sectional shapes and depths of installed sealants relative to joint widths that allow optimum sealant movement capability.

1. Control joint depth.
2. Break bond of sealant at bottom of joint.
3. Provide proper shape of sealant.
4. Do not leave gaps between ends of sealant backings.
5. Do not stretch, twist, puncture, or tear sealant backings.
6. Remove absorbent sealant backings that have become wet before sealant application and replace them with dry materials.

B. Make depth of sealant not more than one-half width of joint, but not less than 1/4 inches.

C. Sub-caulk joints without suitable backstop, to proper depth.

D. Install correctly sized backer rods.

E. Apply bond breaker as required or recommended by sealant manufacturer.

F. Install bond-breaker tape behind sealants where sealant backings are not used between sealants and backs of joints.

G. Make joints watertight and airtight.

H. Install sealants using proven techniques that comply with the following and at same time backings are installed:

1. Place sealants so they directly contact and fully wet joint substrates.
2. Completely fill recesses in each joint configuration.
3. Produce uniform, cross-sectional shapes and depths relative to joint widths that allow optimum sealant movement capability.

I. Tooling of Non-sag Sealants:

1. Tool immediately after sealant application and before skinning or curing begins, to form smooth, uniform beads, eliminate air pockets, and ensure contact and adhesion of sealant with sides of joint.
2. Remove excess sealant adjacent to joints as the Work progresses with cleaning materials approved by manufacturers of joint sealants and of products in which joints occur.
3. Use tooling agents that are approved by sealant manufacturer and that do not discolor sealants or adjacent surfaces.
4. Provide concave joint profile per Figure 8A in ASTM C1193, unless otherwise indicated.

J. At traffic joints, slightly recess sealant to avoid direct contact with wheeled traffic.

3.4 SEALANT USAGE GUIDELINES

Guide to Sealant Types - Exterior				
Location	Materials	Sealant Type	Base Product	Remarks / Exceptions
General Exterior	Cast in Place Concrete Brick and Concrete Masonry Portland Cement Plaster Hollow Metal Door and Window Perimeters	Multi-part Polyurethane, chemically curing, epoxidized	Pecora Dynatrol II	Exception: Use Dymonic where used as bedding sealant for frames, sills, thresholds etc.
	Aluminum Composite Panels (ACM) and Metal Column Covers Joints in materials with high coefficients of linear expansion Weatherseal of Aluminum Window Frames (including perimeter joints)	Silane-Modified Polymer (STPU, STPE, Polyurea)	Pecora Dynatrol I-XL Hybrid	--
	Precast Concrete Panels EIFS Systems	Silicone or Silyl Terminated Polyether (STPE)	Pecora 890NST or 890FTS or Pecora Dynatrol I-XL Hybrid	--
	Stone Work	Silicone or Silane-Modified Polymer (STPU, STPE, Polyurea)	Pecora 864NST or Pecora Dynatrol I-XL Hybrid	Exception: Pre-test for staining potential per ASTM C1248, with stain-sensitive stone Note: Silane-modified Polyurethane will not stain.
	General Exterior Glazing	Silicone; Neutral-cure	Pecora 895NST	Exception: Select alternate silicone sealant types as appropriate for specific glazing application.
	Butt Glazing and Structural Silicone Joints	Silicone; 1-part, Neutral-cure	Pecora 895NST	--
	Fabrication of Insulating Glass Units (IGU)	Primary Seal: Polyisobutylene	Select high quality sealants, of basic type listed, as appropriate for specific application.	

		Secondary Seal: Silicone	Dowsil 982	--
	Zone dams, shear blocks and other internal component of Aluminum Window Systems	Silicone	Use product which offers optimal adhesion and performance for application.	
	Sheet Metal Gutters, Downspouts, Scuppers, etc.	Butyl Rubber	Pecora BC-158	--
	Existing joints where Silicone was previously used	Silicone	Use product which offers optimal adhesion and performance for condition, and which offers suitable color choices for matching.	
Exterior Flatwork	Concrete Paving and Parking Structures	Multi-part Polyurethane	Pecora Dynatred	Pecora DynaTred is rated for continual water emersion. Others may not be.
	Concrete Walks			
	Brick Paving and Walks			
	Stone and Precast Plazas			

Notes
1. The above is intended to be an overall guide. Additional conditions and materials may be required. Notify Architect if additional Guidance is required to select unlisted items.
2. Optional sealant products shall offer same number of color choices as the Base Product listed or custom color matching.
3. All of the conditions and materials listed may not apply to subject project.

3.5 FIELD QUALITY CONTROL

A. Tests and Inspections:

1. Field-Adhesion Testing: Field test joint-sealant adhesion to joint substrates as follows:
   a. Extent of Testing: Test completed, and cured sealant joints as follows:
      1) Perform 10 tests for the first 1000 ft. of joint length for each kind of sealant and joint substrate.
      2) Perform one test for each 1000 ft. of joint length thereafter or one test per each floor per elevation.
   b. Test Method: Test joint sealants in accordance with Method A, Field-Applied Sealant Joint Hand Pull Tab, in Appendix X1 in ASTM C1193 or Method A, Tail Procedure, in ASTM C1521.
      1) For joints with dissimilar substrates, verify adhesion to each substrate separately; extend cut along one side, verifying adhesion to opposite side. Repeat procedure for opposite side.
   c. Inspect tested joints and report on the following:
      1) Whether sealants filled joint cavities and are free of voids.
      2) Whether sealant dimensions and configurations comply with specified requirements.
      3) Whether sealants in joints connected to pulled-out portion failed to adhere to joint substrates or tore cohesively. Include data on pull distance used to test each kind of product and joint substrate. Compare these results to determine if adhesion complies with sealant manufacturer's field-adhesion hand-pull test criteria.
   d. Record test results in a field-adhesion-test log. Include dates when sealants were installed, names of persons who installed sealants, test dates, test locations, whether joints were primed, adhesion results and percent elongations, sealant material, sealant configuration, and sealant dimensions.
   e. Repair sealants pulled from test area by applying new sealants following same procedures used originally to seal joints. Ensure that original sealant surfaces are clean and that new sealant contacts original sealant.
2. Evaluation of Field-Adhesion-Test Results: Sealants not evidencing adhesive failure from testing or noncompliance with other indicated requirements will be considered satisfactory. Remove sealants that fail to adhere to joint substrates during testing or to comply with other requirements. Retest failed applications until test results prove sealants comply with indicated requirements.

B. Prepare test and inspection reports.

PART 4 - MEASUREMENT AND PAYMENT

4.1 MEASUREMENT

A. No separate measurement will be made for the requirements of this section. No separate measurement will be made for the requirements of this section. Exterior Joint Sealants shall be included in the measurement of section 08 11 13 - Hollow Metal Doors and Frames.

4.2 PAYMENT

A. No separate payment will be made for the requirements of this section unless specifically noted for separate payment as stated herein. Full compensation for complying with the requirements of this section for furnishing all labor, materials, tools, equipment, and incidentals and for doing all the work involved in Section 08 11 13 Hollow Metal Doors and Frames, shall be considered as included in contract prices paid for the various items of work involved, and no additional compensation will be allowed therefore.

END OF SECTION

SECTION 08 11 13
HOLLOW METAL DOORS AND FRAMES

PART 1 - GENERAL

1.1 SUMMARY

A. Furnish labor, materials, tools, equipment, and services for Hollow Metal Doors and Frames in accordance with provisions of Contract Documents.

B. Completely coordinate with work of other trades.

1.2 QUALITY ASSURANCE

A. ASTM International (ASTM):

1. ASTM A568 Standard Specification for Steel, Sheet, Carbon, Structural, and High-Strength, Low-Alloy, Hot-Rolled and Cold-Rolled

B. Hollow Door and Frame Standards:

1. ANSI A250.4 Test Procedure and Acceptance Criteria for Physical Endurance for Steel Doors, Frames and Frame Anchors
2. ANSI A250.8 / SDI 100 Recommended Specifications for Standard Steel Doors and Frames
3. ANSI A250.11 Recommended Erection Instructions for Steel Frames

1.3 SUBMITTALS

A. Shop Drawings:

1. Use same reference numbers for openings as those in Door and Frame Schedule in Drawings
2. Indicate door elevations, gauges; frame configuration; anchor types and spacing; location of reinforcement and preparations for hardware, including items recessed within door edges; details of moldings, removable stops, glazing and louvers; details of conduit and preparations for power, signal, and control systems.

B. Product Data:

1. Include construction details, material descriptions, core descriptions, fire resistance rating and finishes.
2. Shop primer.

PART 2 - PRODUCTS

2.1 MANUFACTURERS

A. Hollow Metal Doors and Frames:

1. Base:
   a. Ceco Door Products
2. Optional:
   a. Curries
   b. Philipp Manufacturing Company
   c. Republic Doors and Frames
   d. Steelcraft Manufacturing

B. Galvanizing Repair Coating:

1. Base:
   a. Tnemec
2. Optional:

a. ZRC Worldwide
b. Sherwin Williams

2.2 MATERIALS

A. Steel Sheet and Strip:

1. Comply with ASTM A568.

B. Corrosion Resistant Coating:

1. Hot dip galvannealed: A60 per ASTM A653.
2. Minimum zinc-iron alloy coating: 0.6 oz/FT2.

C. Primer:

1. Shop prime.
2. Clean and phosphatize doors and frames.
3. One coat of baked-on rust inhibiting primer paint in accordance with ANSI A250.10.
4. Suitable and compatible as base for specified finish paints.

D. Galvanizing Repair Coating:

1. Galvanized coating repair.
2. VOC 250 g/L maximum.

E. Hollow Metal Doors:

1. Comply with ANSI/SDI A250.8.
2. Determination of performance level for each door:
   a. Use level of HM door indicated for its location, size, and other listed criteria.

Schedule of HM Door Levels

Location	Additional Criteria	HMMA Level	Notes
Exterior Doors [1] (flush)	Openings where each leaf is less than 47 inches	Level 3 (Extra Heavy duty)	Galvanized / galvannealed Thermally Insulated
	Openings where one or more of the leaves exceeds 47 inches	Level 4 (Maximum-duty)	
Exterior Doors [1] (stile and rail)	All	Level 3 (Extra Heavy duty)	Galvanized / galvannealed Thermally Insulated
Interior Doors	Non-fire rated	Level 2 (Heavy duty)	--
	Fire rated	Level 2 (Heavy duty)	Labeled as indicated (w/out astragal wherever possible)
	Wet / Humid Areas [2]	Level 3 (Extra Heavy duty)	Galvanized / galvannealed Moisture-resistant core Fire-resistant were required
Interior Doors	Non-fire rated	Level 3 (Extra Heavy duty)	--
	Fire rated	Level 3 (Extra Heavy duty)	Labeled as indicated (w/out astragal wherever possible)
	Wet / Humid Areas [2]	Level 3 (Extra Heavy duty)	Galvanized / galvannealed Moisture-resistant core Fire resistant were required

Notes
Refer to Door Schedule for indication of the Door Type (I.e. Width, Fire Rating, Flush vs. Stile & Rail, etc.)
Refer to Plans for door location (Exterior vs. Interior).
Where Hurricane or Tornado resistant openings are specified: Refer to ADDITIONAL REQUIREMENTS for appropriate door/frame construction.
Not all items included in table may apply to subject project.

Footnotes

Schedule of HM Door Levels			
Location	**Additional Criteria**	**HMMA Level**	**Notes**

1. Refer to Part 2.2 MATERIALS for definition of Exterior locations.
2. Refer to Part 2.2 MATERIALS for definition of Wet/Humid locations.

3. Door Thickness: 1-3/4 inches.
4. ANSI A250.8 Level 4, Maximum duty, physical performance Level A.
   a. Face Sheet Thickness: 0.067 inches (14 GA).
5. ANSI A250.8 Level 3, Extra Heavy duty, physical performance Level A.
   a. Face Sheet Thickness: 0.053 inches (16 GA).
6. ANSI A250.8 Model 2, Seamless.
7. End closures at top and bottom of door:
   a. Top: Flush closure top cap. Minimum Sheet thickness: 0.032 inches (20 GA).
   b. Bottom: Flush closure. Minimum Sheet thickness: 0.032 inches (20 GA).
   c. Bottom: Inverted channel. Minimum Sheet thickness: 0.053 inches (16 GA).
8. Vertical door edges:
   a. Lock Stile Edges: Beveled 1/8 inches per 2 inches.
      1) Exception for inactive leaves: Fabricate inactive leaves with a square edge at the lock stile edge. Active leaves to be beveled per above.
      2) Hinge Stiles Edge: Beveled 1/8 inches per 2 inches.
      3) Exceptions for Double Acting Doors: Provide convex, radiused edges at lock stiles and hinge stiles.
9. Hardware Reinforcement (doors):
   a. Fabricate according to ANSI/SDI A250.6 with reinforcement plates from same material as door face sheets.
   b. Minimum thickness: As prescribed in ANSI/SDI A250.6; Upgrade as necessary for conditions such as door weight, size, frequency, etc. and as follows:
   c. Butt Hinges: 0.167 inches (7 GA) plate reinforcement or continuous 0.104 inches (12 GA) channel engineered for equal strength.
   d. Continuous hinges: Reinforce with 0.067 inches (14 GA) thick x 1-1/4 inches wide strapping extending full height and welded to hinge edge of door.
   e. Closers and Overhead Stops: 0.067 inches (14 GA).

F. Hollow Metal (HM) Frames:

1. Comply with ANSI/SDI A250.8 and with details indicated for type and profile in accordance with SDI 111.
2. Fabricate frames with mitered or coped corners and 1/2 inches nominal backbend.
   a. Touch-up galvanized/galvannealed frames with zinc-rich primer.
3. Fabricate frames as Face Welded (modified ANSI definition):
   a. Face Joints: Continuously back weld face joints (weld on concealed side).
      1) Fill and finish exposed sides to be free of visible seams.
   b. Intersections of Rabbets, Stops and Soffit Joints: Fabricate to hairline joints. Stitch weld on concealed side.
   c. Split type frames and knock down type frames are not acceptable.
   d. Fasteners which are exposed to view are not acceptable.
4. Provide minimum steel gauge as indicated for its location, size, and other listed criteria per following schedule.

Schedule of HM Frames			
Location	Criteria	Minimum Thickness	Miscellaneous
Exterior Frames [1]	Standard and Thermally Enhanced	0.067 inches (14 GA)	Galvanized / galvannealed
Interior Frames [1]	Non-fire rated	0.053 inches (16 GA)	--
	Fire rated	0.053 inches (16 GA)	--
	Frames for doors with automatic openers	0.067 inches (14 GA)	--
	Wet / Humid Areas [2]	0.053 inches (16 GA)	Galvanized / galvannealed

Notes
Gauge of frame listed is the minimum. Use heavier gauge as required due to size, physical configuration or if required to meet fire label requirements.
Refer to Door Schedule for indication of the Frame Type (I.e. Width, Single vs. Pair; Fire Rating, etc.)
Refer to Plans for door location (Exterior vs. Interior).
Where Hurricane or Tornado resistant openings are specified: Refer to ADDITIONAL REQUIREMENTS for appropriate door/frame construction.
Some items listed may not apply to subject project.

Footnotes
1. Refer to Part 2.2 for definition of Exterior locations.
2. Refer to Part 2.2 for definition of Wet/Humid locations.

G. Jamb Anchors:
   1. ASTM A879 Commercial Steel, 4 oz/SF coating; mill phosphatized.
      a. Frames in exterior walls:
         1) Steel sheet complying with ASTM A1008 or ASTM A1011, hot-dip galvanized according to ASTM A153, Class B.
   2. Provide anchors in accordance with manufacturer's recommendations on fire rated doors.
   3. Provide minimum number as indicated in following table:

Minimum Quantity of Jamb Anchors	
Nominal Frame Height	Minimum Quantity per Jamb
Less than 60 inches	2
60 inches to 90 inches	3
90 inches to 120 inches	4
120 inches to 150 inches	5
Greater than 150 inches	Add 1 additional for each 30 inchesincrease in height thereafter

      a. Jamb anchors for masonry walls:
         1) Post installed expansion type for in place concrete or masonry:
            a) Minimum 3/8 inches countersunk, flat head expansion bolts with expansion shields or inserts.
            b) Include pipe spacer from frame to wall, with throat reinforcement plate, welded to frame at each anchor location.
            c) Minimum embedment length: 1-3/4 inches.
      b. Floor Anchors:
         1) Same for Jamb Anchors but not less than 0.053 inches (12 GA) thick.
            a) Anchors built into exterior walls:

(1) Steel sheet complying with ASTM A1008 or ASTM A1011, hot-dip galvanized according to ASTM A153, Class B.

b) Monolithic concrete slabs:

(1) Clip type anchors, with two holes to receive fasteners.

c) Topped slabs:

(1) Adjustable anchors with extension clips allowing not less than 2 inches height adjustment. Terminate bottom of frames at finish floor surface.

2) Include concealed fasteners.

3) Provide anchors in accordance with manufacturer's recommendations at fire rated openings.

c. Head Anchors for Double Egress Frames:

1) Provide two head frame anchors for Double Egress frames.

2) Locate at third points of span.

4. Spreaders:

a. Provide removable spreaders at bottom of door frames.

5. Inserts, bolts, and fasteners:

a. Manufacturer's standard units

b. Galvanize items built into exterior walls ASTM A153, Class C or D as applicable.

2.3 FABRICATION

A. Factory fit doors to frame openings with uniform clearances in accordance with:

1. National Fire Protection Association NFPA 80 for fire rated doors.
2. National Fire Protection Association NFPA 105 for smoke control doors.
3. American National Standards Institute ANSI A250.8.
4. Locally adopted Building Code.
5. Steel Door Institute SDI 117.

Door To Frame Clearances		
Location		Clearance
Door to Frame at top and sides		1/8 inches
Meeting Stiles at Pair Doors		1/8 inches
Face of door to face of Stop		1/8 inches
Door Bottom to Floor / Flooring	Typical; all floor covering types	Up to 1/2 inches
	At non-combustible sills	3/8 inches
	Bare floors- No flooring or sills	Up to 3/4 inches

B. Hardware Preparation:

1. Factory-prepare hollow metal work to receive template mortised hardware; include cutouts, reinforcement, mortising, drilling, and tapping according to Door Hardware Schedule and templates furnished as specified in Section 08 71 00.
2. Locate hardware indicated, or if not indicated, according to ANSI/SDI A250.8.
3. Reinforce doors and frames to receive non-template, mortised and surface mounted door hardware.
4. Comply with applicable requirements in ANSI/SDI A250.6 and ANSI/DHI A115 Series specifications for preparation of hollow metal work for hardware.
5. Coordinate locations of conduit and wiring boxes for electrical connections.
6. Remove mill scale and foreign materials, touch up damaged galvanized or galvannealed surfaces.

C. Hollow Metal Doors:

1. Exterior:
    2. Provide weep openings in bottom of exterior doors.
    3. Seal joints in top edges of doors against water penetration.

PART 3 - EXECUTION

3.1 EXAMINATION

A. Examine structure, substrates, and conditions under which work is to be installed for conditions detrimental to correct and timely completion.

B. Installation constitutes acceptance of responsibility for performance.

3.2 INSTALLATION

A. Frames:

1. Place frames before construction of adjacent walls.
    a. Where adjacent walls are cast in place concrete, set frames after wall is constructed.
2. Adjust hollow metal door frames for square, alignment, twist, and plumb to following tolerances:
    a. Plumb: Plus or minus 1/16 inches, measured at jambs at floor.
    b. Level: Plus or minus 1/16 inches per leaf, measured across width of header.
    c. Square: Plus or minus 1/16 inches, measured at door rabbet on a line 90 degrees from jamb perpendicular to frame head.
    d. Alignment: Plus or minus 1/16 inches, measured at jambs on horizontal line parallel to plane of wall.
    e. Twist: Plus or minus 1/16 inches, measured at opposite face corners of jambs on parallel lines, and perpendicular to plane of wall.
3. Do not remove spreaders until surrounding wall construction is complete.
4. After surrounding walls have been constructed, verify frames remain in alignment.
    a. Re-check for level, plumb, square, twist and issues that will prevent proper fitting of doors.
    b. Correct deficiencies before allowing surrounding construction to proceed.
    c. Coordinate with other trades to correct alignment problems.
5. After wall construction is completed, remove temporary braces and spreaders, leaving surfaces smooth and undamaged.
6. Verify frame alignment, and correct deficiencies prior to hanging doors.
7. Install frames with removable glazing stops located on secure side of opening.
8. Provide anchor type specified for wall condition.
9. Align anchors at hinge centers on hinge jamb and at corresponding heights on strike jamb.
10. Secure frame to wall per manufacturer’s instructions.

B. Prime Coat Touchup:

1. Immediately after erection, sand smooth rusted or damaged areas of primer coat.
2. Touch up primer coat with compatible air drying primer.
3. Leave surfaces smooth for finish painting.

C. Field Painting of HM Frames and Doors:

1. Painting of Exterior openings: Match paint to existing conditions.

D. Install Sealants:

1. Seal frames to walls.
2. Seal frames to floor slabs and hard floor finishes.
3. Hairline gap at intersections of head and jamb frames intersections of rabbets and stops:

a. Fill exposed seam with painter's caulk.

4. Sealants:
   a. Exterior: See Section 07 92 13.

E. Install silencers.

3.3 ADJUSTING AND CLEANING

A. Verify frames remain in proper alignment.

B. Correct deficiencies before proceeding with surrounding construction.

C. Remove protective wrappings from doors and frames.

D. Verify fire labels are intact, and readily visible.

PART 4 - MEASUREMENT AND PAYMENT

4.1 MEASUREMENT

A. "Hollow Metal Doors and Frames" shall be measured by the unit. Quantity shall be confirmed by submittal of "Hollow Metal door" and Frame product data, as well as door hardware submittals. These submittals will include all relevant door frame and door hardware used on the project, as outlined in Section 08 71 00 – Door Hardware.

4.2 PAYMENT

A. The contract price paid per unit for "Hollow Metal Doors and Frames" shall include full compensation for furnishing all labor, materials, tools, equipment, and incidentals and for doing all the work involved in "Hollow Metal Doors and Frames", including door frame hardware, door hardware, and relevant door frame connection items as outlined in Section 08 71 00 – Door Hardware removing and disposing of existing doors and door hardware, as shown on the plans, as specified in the Standard Specifications and these Special Provisions.

END OF SECTION

SECTION 08 33 30
COILING FIRE AND EGRESS ASSEMBLY

PART 1 - GENERAL

1.1 SUMMARY

A. Furnish labor, materials, tools, equipment, and services for Coiling Fire and Egress Assembly, as indicated, in accordance with provisions of Contract Documents.

B. Completely coordinate with work of other trades.

1.2 SUBMITTALS

A. Product Data:

1. For each type of material and accessory.

B. Shop Drawings:

1. Include elevations, sections, and details indicating dimensions, materials, finishes, conditions for anchorage and support of each door.

C. Project Information:

1. Manufacturer's technical literature describing specified products.
2. Manufacturer’s burn test report.

D. Contract Closeout Information:

1. Maintenance and Operating Manuals.

1.3 QUALITY ASSURANCE

A. Comply with governing regulations inspected, tested, listed, and labeled by UL or WH and NFPA 80.

B. Supply units tested and approved in accordance with UL 10B, UL 1784 and NFPA 252.

C. Permanently fasten testing agency label to each fire door assembly.

D. Comply with applicable requirements of the laws, codes, ordinances, and regulations of federal, state, and municipal authorities having jurisdiction.

E. Provide certified documentation that fire door operator and self-closing mechanism has been tested for a minimum of 50,000 cycles and 500 drop tests.

PART 2 - PRODUCTS

2.1 MANUFACTURERS:

A. Coiling Fire and Egress Assembly:

1. Base:
   a. Cornell Iron Fire Miser.
2. Optional:
   a. McKeon Door Company.

2.2 MATERIALS

A. Base Product: Double-egress Systems: Firemiser ERD10 by Cornell Iron works

B. Curtain:

1. Galvanized steel slats, cold rolled.
2. 0.032 inches (20 GA) minimum.
3. Provide slat endlocks.

C. Bottom Bar:

1. Material: Galvanized steel.
2. Double-angle assembly with safety edge.

D. Floating Guide:

1. Steel channel assembly to ensure proper feeding of the curtain into the door frames.
2. Allow engagement of coiling curtain in egress door frame.

E. Hood:

1. Material: Galvanized steel.
2. Minimum Thickness: 0.026 inches (22 GA).
3. Fabricate to fully enclose coiled curtain and counterbalance assemblies.
4. Hem top and bottom edges for stiffness.
5. Provide UL classified lintel smoke seals.

F. Counterbalance Assembly:

1. Counterbalance curtain assembly by means of adjustable steel helical torsion springs attached to shaft and enclosed in pipe with required mounting blocks or rings for attachment of curtain.
2. Attach grease sealed bearings or self-lubricating graphite bearings to the spring barrel.
   a. Fabricated of hot formed structural quality carbon steel seamless pipe.

G. Electric Motor Operator:

1. General:
   a. Adjustable screw type limit switch.
   b. Planetary gearing with centrifugal governor, spring set solenoid operated brake and fail-safe magnetic release device.
   c. Operator Enclosure: NEMA type 1 enclosure.
2. Motor:
   a. Enclosed, intermediate duty, thermally protected, ball bearing type with a class A insulation.
   b. Minimum Horsepower: 1/2 hp or as otherwise recommended by manufacturer.
   c. Overload motor protection device.
3. Starter:
   a. Size 0 magnetic reversing starter with 24V control circuit.
4. Reducer: Planetary gear type.
5. Brake: Double shoe type, continuous duty, solenoid activated.
6. Flush mount key switch control station marked open, close and stop.

2.3 FINISHES

A. Galvanized Steel Units:

1. Powder coat finish:
2. Color as selected by Engineer from manufacturers standard palette.

PART 3 - EXECUTION

3.1 EXAMINATION

A. Examine surfaces and field conditions to which this work is to be performed.

B. Verify dimensions taken at job site affecting the work.

3.2 INSTALLATION

A. Perform installation using only factory approved representatives of door manufacturer.

B. Install door assemblies at locations shown in alignment and elevation, plumb, level, straight and true.

C. Adjust door installation to provide uniform clearances and smooth non-binding operation.

D. Install wiring in accordance with applicable local codes and National Electrical Code. Contractor to provide site specific plan for Engineer approval. Install on separate circuits from the main panel, unless directed otherwise.

E. Test door closing sequence when activated by building's fire alarm system.

3.3 PROTECTION AND CLEANING

A. Protect work during and after installation until accepted by owner.

B. Remove, repair, or replace materials which have been damaged.

PART 4 - MEASUREMENT AND PAYMENT

4.1 MEASUREMENT

A. Full compensation for “Coiling Fire and Egress Assembly” shall be measured by the unit. Quantity shall be confirmed by submittal of “Coiling Fire and Egress Assembly” product data and will include all relevant frame, hardware for connections, and connection information used on the project, as outlined in this section.

4.2 PAYMENT

A. The contract price paid per unit for “Coiling Fire and Egress Assembly” shall include full compensation for furnishing all labor, materials, tools, equipment, and incidentals and for doing all the work involved in “Coiling Fire and Egress Assembly”, including frames, frame hardware and connection hardware, as outlined in in this section, as shown on the plans, and as required by these technical specifications.

END OF SECTION

SECTION 08 71 00
DOOR HARDWARE

PART 1 - GENERAL

1.1 SUMMARY

A. Furnish labor, materials, tools, equipment, and services for Door Hardware, as indicated, in accordance with provisions of Contract Documents.

B. Notify Architect of items which will not operate properly, attain the required fire label, or where components are physically or functionally incompatible.

C. Completely coordinate with work of other trades.

1.2 SUBMITTALS

A. Product Data:

1. For each type of material and accessory.

B. Shop Drawings:

1. Complete Hardware Schedule by door.
   a. Complete list of products including model numbers and cut sheets.
   b. Use Heading Numbers logically derived from listed Hardware Set numbers.
   c. Hardware Sets shall follow the guidelines established in Door and Hardware Institute Handbook (DHI) Sequence and Format for the Hardware Schedule.
   d. Notify Engineer of items which will not operate properly, attain the required fire label, and where components are physically or functionally incompatible.
2. Diagrammatic Elevations and Point-to-Point Wiring Diagrams of openings scheduled to receive electrified hardware and electronic access control devices.
   a. Provide detailed wiring diagrams showing connections for signaling, control and locking functions and notes pertinent to programming, operation, etc.
   b. When door hardware sets include automatic operators and locking or latching hardware on the same doors, provide detailed wiring diagrams.
   c. Submit with Hardware Schedule.

C. Project Information:

1. Certification that items bear UL label where required.
2. Meeting minutes from Pre-Installation Meeting.
3. Names of supplier’s certified AHCs active on project.

D. Contract Closeout Information:

1. Schedule of components installed as hardware sets for each opening.
2. Operating and maintenance data.
   a. Parts catalog for each product furnished.
   b. Keying records.
3. Owner instruction report.
4. Letter stating extra material has been delivered.

1.3 QUALITY ASSURANCE

A. Hardware Supplier Qualifications:

1. Architectural door hardware supplier with warehousing facilities.
2. Operating in the project’s vicinity for a period of not less than 2 years.
3. Certified Architectural Hardware Consultant (AHC) available throughout construction.

B. Finish designations and standards: Builders Hardware Manufacturers Association (ANSI/BHMA) Standard 1301.

C. Regulatory Requirements:

1. Barrier free design requirements of the local jurisdiction and Americans with Disabilities Act (ADA).
2. Listing requirements of the local jurisdiction and UL listing where applicable by type.

1.4 SPECIAL WARRANTY

A. Written warranty in which manufacturer agrees to repair or replace components of door hardware that fail in materials or workmanship within three years from date of Substantial Completion, or 25 years from date of Substantial Completion in the case of manual surface closers.

1. Failures include, but are not limited to, the following:
   a. Structural failures including excessive deflection, cracking, or breakage.
   b. Faulty operation of door hardware.
   c. Deterioration of metals, metal finishes, and other materials beyond normal weathering and use.

1.5 MAINTENANCE

A. Extra Materials:

1. Provide special tools as supplied by hardware manufacturer, for each different or special hardware component.

PART 2 -PRODUCTS

2.1 MANUFACTURERS

A. Hinges:

1. Base:
   a. Hager Hinge
2. Optional:
   a. Stanley Hardware
   b. McKinney
   c. Ives

B. Cylinders:

1. Base:
   a. Same manufacturer as listed for Locks, Latches and Deadbolts.

C. Locks, Latches, and Deadbolts:

1. Base:
   a. Schlage Lock
2. Optional:
   a. Sargent Manufacturing
   b. Stanley Security Solutions/Best Access Systems

D. Exit Devices:

1. Base:
   a. Von Duprin
2. Optional:
   a. Sargent Manufacturing
   b. Precision Hardware

E. Door Pulls, Pushplates, and Pushbars:
   1. Base:
      a. Trimco
   2. Optional:
      a. Hager Hinge
      b. Burns Manufacturing
      c. Ives
      d. Rockwood Manufacturing

F. Door Closers:
   1. Base:
      a. LCN
   2. Optional:
      a. Sargent Manufacturing
      b. Stanley

G. Thresholds, Head Drips, Weatherstripping, and Smoke Gaskets:
   1. Base:
      a. Reese Enterprises
   2. Optional:
      a. National Guard Products
      b. Pemko Manufacturing
      c. Zero International

H. For other manufacturers submit samples of both specified item and proposed item for comparison.

2.2 MATERIALS

A. Finishes and Fasteners:

Hardware Finishes				
Hardware Component	Satin Chrome Series			
	Base Metal	ANSI / BHMA	Finish Description	US Equiv.
Locksets and Latchsets	Brass/Bronze	626	Match existing	US26D
Door Pulls, Pushbars, and Pushplates	Stainless Steel	630	Satin Stainless Steel	US32D
Kickplates and Armorplates	Stainless Steel	630	Satin Stainless Steel	US32D
Exit Devices	Brass/Bronze	626	Satin Chromium plated over nickel	US26D
Hinges	Stainless Steel	630	Satin Stainless Steel	US32D
	Steel	652	Satin Chromium plated over nickel	US26D
Thresholds, Weatherstripping, Head Drips	Aluminum	719	Mill finish aluminum	US27
Door stops, holders, pivots, door edging and other unlisted items	Brass/Bronze	626	Satin Chromium plated over nickel	US26D
Patient Latches	Stainless Steel	630	Satin Stainless Steel	US32D
Exposed arms and covers of closers:	Any	689	Powder Coated, Aluminum Color	US20A

   1. Fasteners:
      a. Manufacture hardware to conform to templates.
      b. Prepare for Phillips oval head machine screw installation unless directed otherwise.

c. Exposed screws to match hardware finish or, if exposed in surfaces of other work, to match finish of other work as closely as possible.
d. Provide concealed fasteners (unless thru bolted).
e. Provide non-corrosive fasteners.

2. Templates:
a. Provide templates to door and frame suppliers.
b. List template numbers on Hardware Schedule submittal for use by fabricators.
c. Provide copies of approved Hardware Schedule to related suppliers, fabricators, and installers.

B. Hinges:

1. Butt Hinges:
a. Butts and Hinges: ANSI/BHMA A156.1
b. Template Hinge Dimensions: ANSI/BHMA A156.7
c. Self-Closing Hinges: ANSI/BHMA A156.17.
d. Full mortise, unless noted otherwise.
1) Non-rising, flat button tips.
2) Hospital tips: Psychiatric patient areas.
3) Hospital tips: Inmate areas.
4) Non-removable pins (NRP): Provide at out-swinging exterior doors and where specifically indicated.
e. Following table refers to manufacturer's numbers that are considered equal:

Definition of Hinge Types

Type	Manufacturer				Description	
	Hager	Stanley	Ives	McKinney	ANSI	Remarks
1	BB1199	FBB199	5BB1HW	T4B3386 or T4A3386	A5111	Stainless Steel, Heavy Weight, 5-knuckle, 4 Ball Bearing, Non-ferrous for wet/exterior usage.
2	BB1168	FBB168	5BB1HW	T4B3786 or T4A3786	A8111	Heavy Weight, 5-knuckle, 4 Ball Bearing, Steel with Steel Pin.
3	BB1279	FBB179	5BB1	TB2714 or TA2714	A8112	Standard Weight, 5-knuckle, 2 Ball Bearing, Steel with Steel Pin
4	BB1263	FBB268/78	5BB1SCHW	T4B3795 or T4A3795	A8121	Swing Clear Hinge, Heavy Weight, 5-knuckle, 4 Ball Bearing, Steel with Steel Pin
5	1250	2060R	3SP1	1552	K81071F	Spring Hinge, (single-acting), Steel, Use two Type 5 (Spring Hinges) in combination with Type 2 (Heavy Weight Ball Bearing) hinges

NOTES:

Use Type where indicated. It is possible that not all Types will be needed on subject project.

On openings with unequally sized pairs: Utilize same hinge model on both leaves; Hinge type listed for the larger/heavier leaf shall govern.

Use the appropriate variations of the above listed Model Numbers for actual door edge style specified (I.e. Bevel or Square Edge Doors).

Where Type 4 (Swing Clear) or Type 5 (Spring) hinges are called for at Exterior or wet areas: Use the Stainless Steel variations of the above listed Model Numbers.

f. Hinge Types according to door location and width:
1) Type 1 - Stainless Steel, Heavy Weight, Ball Bearing Hinge:
a) Exterior out-swinging doors with non-removable pins (NRP) option.
b) Exterior in-swinging doors.
c) Interior in-swinging doors to wet areas (showers, kitchens, etc.).
2) Type-2 - Steel, Heavy Weight, Ball Bearing Hinge:

a) Interior greater than 36 inches wide.

3) Type-3 - Steel, Normal Weight, Ball Bearing Hinge:

a) Interior less than or equal to 36 inches.

g. Hinge quantities per door leaf:

1) Leaves up to 60 inches: 3 hinges.

2) Leaves between 61 inches and 90 inches: 3 hinges

3) Leaves between 91 inches and 120 inches: 4 hinges

4) Leaves between 121 inches and 150 inches: 5 hinges

5) Leaves taller than 151 inches: add 1 hinge for each 30 inches increase in leaf height thereafter.

h. Hinge sizes:

Guide to Minimum Sizes of Hinges			
Door Thickness	**Door Width**	**Minimum Hinge Height**	**Minimum Hinge Width**
1-3/8 inches	Up to 32 inches	3-1/2 inches	3-1/2 inches
	From 32 inches to 36 inches	4 inches	
	Greater than 37 inches	4-1/2 inches	
1-3/4 inches	Up to 36 inches	4-1/2 inches	4-1/2 inches
	From 37 inches to 48 inches	5 inches	
	Over 48 inches	6 inches	
2 to 2-1/2 inches	Up to 42 inches	5 inches Heavy Weight	5 inches
	Over 43 inches	6 inches Heavy Weight	

NOTES:

1. The above is a guide to minimum sizes. Consider the actual weight of door leaf being supported and its anticipated frequency of use when determining the actual hinge height.

2. Do not exceed parameters recommended by Hinge manufacturer.

3. Unequal Pairs: Utilize same hinge size for both leaves; Hinge height stipulated for the wider leaf shall govern.

4. Increase the hinge width as required to clear door trim where used. Ensure that door, when opened 180 Degrees will not contact the applied trim.

2. Continuous Geared Hinges:

a. Provide where specifically scheduled by Hardware Sets.

b. ANSI/BHMA A156.26.

c. Door leaf and jamb leaf shall be geared together for the entire length of the hinge and joined by a channel.

d. Mounting: Concealed (non-surface mounted) with door edge protector lip.

e. Hinge knuckle: Monolithic appearance. Piano hinges visible knuckle separations are not considered equivalent.

f. Designed to carry vertical door loads on minimum 3/4 inches acetal bearings through a full 180 degrees.

1) Minimum of 32 bearings for a 7 foot length.

g. Template screw locations at door leaf and jamb leaf to simplify replacement.

h. Base Products: 224HD by Ives.

i. Optional Products:

1) FMHD by Pemko

2) MCK-25HD by McKinney
3) 780-224HD by Hager.
4) 662HD by Stanley.

C. Cylinders:

1. ANSI/BHMA A156.5 Grade 1.
2. Material: Brass or bronze, stainless steel, or nickel silver.
3. Finish: Match lock mechanism to which cylinders are installed.
4. Cylinder Type: Interchangeable cores at Exit Devices; Conventional cores (non-interchangeable) at other locksets.
5. IC Format: Full-sized Interchangeable Cores (IC).
6. Cylinder Mechanism:
   a. Conventional, 6-pin tumbler.
7. Key Control:
   a. Open.
8. Determine key type required to suit locking mechanism. Include appropriate trim rings, cams, tail pieces, and adaptors.
9. Patented cylinders and keys to protect against unauthorized manufacture.
10. Provide cylinders for all locking mechanisms scheduled.
11. Base Product:
    a. Everest Primus by Schlage.
    b. Everest Restricted Conventional by Schlage.
    c. Everest Open Conventional by Schlage.
    d. Classic Primus by Schlage.
    e. Classic Conventional by Schlage.
    f. Signature Series by Sargent Manufacturing.
    g. XC Series by Sargent Manufacturing.
    h. Optional Products: Comparable products by approved manufacturers.

D. Mortise Locks and Latches:

1. ANSI/BHMA-A156.13, Series 1000, Operational and Security Grade-1.
2. Mortise with antifriction latch bolt with 3/4 inch throw and deadbolt with 1 inch throw.
3. Sectional trim.
4. Backset: 2-3/4 inches.
5. Base Product: L Series by Schlage.
6. Optional Products:
   a. 8200 Lever Lock by Sargent Manufacturing
   b. 40H by Best
7. Lever Style: 06 design
8. Functions as indicated in Hardware Sets and in accordance with ANSI/BHMA-A156.13.

E. Cylindrical Locks and Latches:

1. ANSI/BHMA-A156.2, Series 4000, Grade 1.
2. Heavy duty cylindrical with latch bolt throw as follows:
   a. Single doors: 1/2 inches minimum, or as otherwise required by fire label.
   b. Pair doors: 3/4 inches minimum, or as otherwise required by fire label.
   c. Backset: 2-3/4 inches.
3. Base Product: ND Series by Schlage.
4. Optional Products:

a. 10-Line by Sargent Manufacturing
b. 9K by Best

5. Lever Design: Rhodes lever.
6. Functions as indicated in Hardware Sets and accordance with ANSI/BHMA-A156.2.

F. Exit Devices:

1. ANSI/BHMA-A156.3, Grade 1
2. Include cylinders at lockable exit devices.
3. Lever Trim: Match lever style specified for Locks and Latches.
4. Offset Pull Style: 1 inch diameter; 8190-0 by Ives/Von Duprin.
5. Non-rated Openings:
   a. Use doggable devices UL-listed for accident hazard.
      1) Exception 1: Omit dogging or use fire rated devices at Smoke Partitions.
      2) Exception 2: Omit dogging or use fire rated devices where openings include Card Readers and dogging could compromise ability to secure the opening.

G. Strikes:

1. Provide manufacturer's standard strike for each latching/locking mechanism.
   a. Finish: Match latch/lock device.
2. Standards:
   a. Strikes for Bored Locks and Latches: ANSI/BHMA A156.2.
   b. Strikes for Mortise Locks and Latches: ANSI/BHMA A156.13.
   c. Strikes for Auxiliary Deadlocks: ANSI/BHMA A156.5.
3. Strike Lip:
   a. Curved lip extended to protect frame.
   b. Locks with 3-piece antifriction latch bolts: Flat-Lip Strikes.
   c. Locks used on frames with applied wood casing trim: Extra-Long-Lip Strikes.
4. Provide manufacturer's standard Wrought Strike Box for each latching/locking mechanism.
5. Provide specially fabricated Strike Boxes where set in aluminum framing.

H. Door Pulls, Pushplates and Pushbars:

1. ANSI/BHMA A156.6.
2. Door Pull (straight):
   a. Tubular metal; 1 inch diameter
   b. Size: 10 inches (CTC)
   c. Base Product: Trimco series 1195
   d. Optional Product: Ives series 8103

I. Door Closers (surface applied):

1. General:
   a. ANSI/BHMA A156.4, Grade 1.
   b. UL listed for use on fire doors.
   c. Body Material: Cast iron.
   d. Size door closers to comply with manufacturer's recommendations for door sizes, locations, and accessibility requirements for opening force.
   e. Adjust closer to meet accessibility requirements for opening force and closing speed.
   f. Supply arms, brackets, and plates, as required.
   g. Mount closers on room side of corridor doors unless conditions prohibit such mounting.
   h. Integral back checks.

i. Include limiting cushion stop at exterior, out-swinging doors.

2. Base Product:
   a. Models 4040XP by LCN.
3. Optional Products:
   a. 281 Series by Sargent Manufacturing.
   b. QDC100 Series by Stanley.
   c. 9500 Series by Norton.

J. Door closers for Section 08 17 00 integrated doors.

1. Base Product: LCN 3030 or 4040.
2. Other closer manufacturers submit templates to manufacturer for machining.

K. Door Holders and Stops:

1. General:
   a. Provide Door Stop at each door leaf.
   b. Use type as indicated in Hardware Set.
   c. If no type is indicated, use criteria listed below.

2. Overhead Door Stops:
   a. Provide where door could swing more than 110 degrees without encountering a wall or where door meets an exception preventing use of a wall stop.
   b. Base Products:
3. Kick-down Holder:
   a. Units provide hold and release, activated with a touch of the foot.
   b. Material: Cast brass or aluminum construction with Stainless steel spring.
   c. Replaceable non-marring rubber shoes.
   d. Size for actual floor to door distance.
   e. Base Product: FS452 by Ives.

PART 3 - EXECUTION

3.1 EXAMINATION

A. Examine scheduled openings for compliance with requirements for installation tolerances, labeled fire door assembly construction, wall and floor construction, and other conditions affecting performance.

B. Coordinate reinforcement or other preparation of doors and frames.

C. Installation constitutes responsibility for performance.

D. Coordinate installation power supply and communication wiring to electrically operated devices.

3.2 INSTALLATION

A. Install in accordance with manufacturer's installation instructions, supervised or inspected by an AHC.

B. Furnish items of hardware for proper door swing.

C. Permanently install hardware after finishing operations are complete.

D. Protect finishes by temporary coverings as required.

E. Mounting Heights:

Mounting Heights of Hardware	
Item	**Height** [1,2] (to Item Centerline)
Mortise Locksets	40-5/16 inches AFF to Centerline of Strike [3]
Cylindrical Locksets	
Patient Latches	
Exit Devices	
Door Pulls	42 inches AFF to Centerline of Pull
Pushplates	45 inches AFF to Centerline of Plate
Auxiliary Deadbolts	48 inches AFF to Centerline of Strike
Butt Hinges (and Pivots)	Top Hinge: Not more than 11-3/4 inches down from frame
	Bottom Hinge: Not more than 13 inches above floor
	Equally spaced between Top and Bottom Hinges. Refer to Part 2 regarding quantity required.
Other Items	Comply with SDI and DHI Recommendations

Footnotes/Additional Requirements:

1. Mounting Heights shall also comply with ADA and ICC/ANSI 117.1
2. Mounting Heights shall also comply with Building Code and Fire Codes.
3. Deviation from listed height will be allowed up to + 1-1/2 inches provided this does not cause a conflict between the lock and lite cutouts.

F. Install hardware with fasteners concealed where not required by code to be exposed.

3.3 ADJUST AND CLEAN

A. Adjust and check each operating item of hardware to ensure proper operation or function.

1. Lubricate moving parts with lubricant recommended by manufacturer.
2. Replace units which cannot be adjusted and lubricated to operate smoothly.

B. Conversion of Construction Keying to Permanent (by Contractor):

1. Convert cylinders from Construction to Permanent configuration at time of Substantial Completion.
2. Demonstrate conversion method to Owner’s facility personnel, making certain Owner’s team understands methodology.

C. Approximately six months after substantial completion, check and readjust to assure proper function of doors and hardware.

1. Clean and lubricate operational items.
2. Replace items which have deteriorated or failed.
3. Prepare a written report of current and predictable problems in operation of hardware.
4. Report visit and furnish copy of report to Owner.

D. When hardware is installed more than one month prior to final acceptance or occupancy, during week prior to acceptance or occupancy, make a final check and adjustment of hardware items.

1. Remove temporary coverings.
2. Clean and lubricate for proper function and finish.
3. Adjust door control devices to compensate for operation of heating and ventilating equipment.

E. Instruct Owner's personnel:

1. Operating and maintenance procedures.
2. Key control system.
3. Converting cylinders from Construction to Permanent key configuration.

PART 4 - MEASUREMENT AND PAYMENT

4.1 MEASUREMENT

A. No separate measurement will be made for the requirements of this section unless otherwise provided for Door Hardware shall be included in the measurement for Section 08 11 13 - Hollow Metal Doors and Frames.

4.2 PAYMENT

A. No separate payment will be made for the requirements of this section unless specifically noted for separate payment as stated herein. Full compensation for complying with the requirements of this section for furnishing all labor, materials, tools, equipment, and incidentals and for doing all the work involved in Section 08 11 13 Hollow Metal Doors and Frames, shall be considered as included in contract prices paid for the various items of work involved, and no additional compensation will be allowed therefore.

END OF SECTION

SECTION 10 14 00
SIGNAGE

PART 1 - GENERAL

1.1 SUMMARY

A. Furnish labor, materials, tools, equipment, and services required for fabrication and installation of Signs as indicated in the drawings.

B. Completely coordinate with work of other trades.

1.2 QUALITY ASSURANCE

A. 2010 ADA Standards for Accessible Design.

B. American National Standards Institute, ICC/ANSI A117.1.

1.3 SUBMITTALS

A. Product Data:

1. For each type of material and accessory.

B. Sustainable Design Submittals:

1. VOC Emissions Evaluation: Provide third-party certification meeting the indoor air quality requirements per CDPH v1.2-2017.
2. VOC Content Evaluation: Manufacturer documentation showing VOC content compliance (g/L).
3. LEED Environmental Product Declaration: For each product if available.
4. LEED Health Product Declaration: For each product if available.
5. LEED Sourcing of Raw Materials: For each product if available.

PART 2 - PRODUCTS

2.1 MANUFACTURERS

A. Signs:

1. Base:
   a. ASI Sign Systems.
2. Optional:
   a. Best Manufacturing Sign Systems.
   b. Innerface Architectural Signage.
   c. InPro Corporation.
   d. Latitude Signage + Design.
   e. Mohawk Sign Systems.

2.2 MATERIALS

A. Signs:

1. Three-ply plastic laminate, 1-1/2 inches wide x length required for script.
2. Nominal letter height: 3/4 inches.
3. Letters and numbers: Raised 1/32 inches.
4. Uppercase.
5. Letter style: Sans serif.
6. Color: As selected.
   a. Characters: Dark.

b. Background: Light.

7. Finish: Non-glare.
8. Bevel edges.
9. Letters shall conform to following proportional standard:
    a. The font width of uppercase letter “O” shall be 55% minimum and 110% maximum height of uppercase letter “I”.
    b. Stroke thickness of uppercase letter "I" shall be 10% minimum and 30% maximum height of character.
10. Tactile lettering shall conform to following standards:
    a. Character height measured vertically from the baseline of character shall be 5/8 inches minimum and 2 inches maximum based on height of uppercase letter “I”.
    b. Stroke thickness of uppercase letter "I" shall be 15% maximum height of character.
    c. The font width of uppercase letter “O” shall be 55% minimum and 110% maximum height of uppercase letter “I”.
    d. Maintain minimum 1/8 inches font separation between characters.
11. Braille characters shall conform to the following standard:
    a. Braille characters shall be separated from adjacent raised characters or symbols 1/2 inches.
    b. Grade 2 Braille translation to be provided by identification device manufacturer.

B. Directional and identification signs for communications systems: International symbols.

C. Adhesive: 3M double-coated urethane foam tape.

1. 4032 for smooth surfaces.
2. 4016 for rough surfaces.

PART 3 - EXECUTION

3.1 INSTALLATION

A. Location:

1. Single doors: Install on wall adjacent to latch side of door.
2. Mount 60 inches above finish floor to centerline of identification device, unless otherwise indicated.
    a. Mount signs so that tactile characters and Braille are located between 48 inches and 60 inches above finish floor.

B. Mount using adhesive tape.

3.2 SCHEDULE

A. Provide signs as follows:

1. "Mechanical Room" at each mechanical space door.
2. "Evacuation Plan" with updatable insert where required.
3. "In Case of Fire…" signs located where appropriate.
4. "Electrical" at each electrical closet.
5. "Exit", "To Exit", "Not an Exit", etc., tactile signs where required.
6. Flag mounted Fire Extinguisher pictographic signs where required.
7. Accessibility directional signage, indicating route to nearest accessible element.
8. Occupant load (Maximum Occupancy) at appropriate locations.

B. Provide international accessibility symbols at:

1. Accessible entrance.
2. Accessible exit.

3. At inaccessible elements, provide directional signage to indicate route to nearest accessible element.

PART 4 - MEASUREMENT AND PAYMENT

4.1 MEASUREMENT

A. “Signage” shall be measured by the shall be measured by each sign furnished, installed and accepted, as shown on the drawings including all hardware and mounting fixtures.

4.2 PAYMENT

A. The contract price paid per each Signage shall include full compensation for furnishing all labor, materials, tools, equipment, required attachments, and incidentals and for doing all the work involved in furnishing and installing “Signage”, as shown on the plans, and required by these Technical Specifications.

END OF SECTION

SECTION 10 44 00
FIRE PROTECTION SPECIALTIES

PART 1 - GENERAL

1.1 SUMMARY

A. Furnish labor, materials, tools, equipment, and services for Fire Protection Specialties in accord with provisions of Contract Documents.

B. Completely coordinate with work of other trades.

1.2 REFERENCES

A. ASTM International (ASTM):

1. ASTM E814 Standard Test Method for Fire Tests of Penetration Firestop Systems
2. ASTM F2503 Standard Practice for Marking Medical Devices and Other Items for Safety in the Magnetic Resonance Environment.

B. National Fire Protection Association (NFPA):

1. NFPA 10 Standard for Portable Fire Extinguishers.

C. Americans with Disabilities Act (ADA):

1. Standards for Accessible Design.

1.3 SUBMITTALS

A. Product Data:

1. For each type of material and accessory.

B. Contract Closeout Information:

1.4 QUALITY ASSURANCE

A. Provide fire extinguishers, cabinets, and accessories by single manufacturer.

PART 2 - PRODUCTS

2.1 MANUFACTURERS

A. Fire Protection Specialties:

1. Base:
   a. Activar JL Industries.
2. Optional:
   a. Badger.
   b. Larsen's Manufacturing.
   c. Nystrom.

B. Fire Extinguishers:

1. Base:
   a. Activar JL Industries.
2. Optional:
   a. Amerex.
   b. Badger.
   c. Larsen's Manufacturing.
   d. Nystrom.

C. Storage Case for Self-Contained Breathing Apparatus (SCBA):

1. Base:
   a. Allegro Industries.
2. Optional:
   a. MSA.
   b. Encon Safety Products, Inc.

2.2 MATERIALS

A. Fire Extinguishers:

1. Multi-Purpose Chemical Fire Extinguishers:
   a. Typical FE, except where more specialized types are required.
   b. Fluidized and siliconized chemical powder extinguishing agent suitable for class A, B and C fires.
   c. Construction:
      1) Heavy-duty steel cylinder with metal valve and siphon tube with replaceable molded valve stem seal, visual pressure gauge, pull pin and upright squeeze grip.
      2) Corrosion and impact-resistant, powder coat finish.
      3) Color: Red, in accord with OSHA requirements.
   d. Capacity: 10 pounds.
      1) UL-rating: 4A-80BC.
      2) Base Product Model: Cosmic 10E by JL Industries.
   e. Provide one FE for each:
      1) Fire Extinguisher (FE) location.

B. Wall Brackets:

1. Manufacturer's standard steel, designed to secure fire extinguisher to wall or structure, of sizes required for types and capacities of fire extinguishers indicated.
2. Finish: Baked-enamel or powder coat.
3. Include mounting accessories suitable for substrate wall type.
4. Locations: Install wall brackets for each fire extinguisher (FE) not indicated to be installed in a cabinet.

PART 3 - EXECUTION

3.1 EXAMINATION

A. Verify suitability of substrates to accept installation.

B. Installation constitutes acceptance of responsibility for performance.

3.2 INSTALLATION

A. Install extinguishers and cabinets within limitations of NFPA-10 and ADA.

B. Fasten mounting brackets and cabinets to structure, square and plumb, to comply with manufacturer’s instructions.

C. Mounting Height:

1. Fire Extinguishers (FE) not contained in a cabinet:
   a. Locate wall brackets such that extinguisher release mechanism will not be higher 48 inches AFF.

3.3 ADJUSTING AND CLEANING

A. Remove temporary protective coverings and strippable films.

B. Clean interior and exterior surfaces.

PART 4 - MEASUREMENT AND PAYMENT

4.1 MEASUREMENT

A. “Fire Extinguishers” shall be measured by each extinguisher furnished, installed, and accepted. Quantity shall be confirmed by submittal of “Fire Extinguishers” product data and will include all relevant Fire Extinguisher information, Fire Extinguisher mounting information and hardware required in the project, as outlined in this section.

B.

4.2 PAYMENT

A. The contract price paid per each “Fire Extinguishers” shall include full compensation for furnishing all labor, materials, tools, equipment, and incidentals and for doing all the work involved in “Fire Protection Specialties”, as shown on the plans, and as required by these technical specifications.

END OF SECTION

SECTION 26 00 10
ELECTRICAL GENERAL REQUIREMENTS

PART 1 - GENERAL

1.1 SUMMARY

A. Furnish labor, materials, tools, equipment, and services for Electrical General Requirements, as indicated, in accordance with provisions of Contract Documents.

B. Completely coordinate with work of other trades.

C. Drawing Use and Interpretation:

1. Drawings are diagrammatic and indicate general arrangement of systems and equipment, except:
    a. Specific installation details.
    b. When specific dimensions are indicated for electrical equipment, it is intended that these be limiting dimensions. When proposed equipment exceeds these limiting dimensions, notify Architect. Features and functions of specified equipment shall not be superseded by these limiting dimensions.
2. For exact locations of building elements, refer to dimensioned architectural/structural drawings.
3. Field measurements take precedence over dimensioned drawings.
4. Intention is to indicate size, capacity, approximate location, direction, and general relationship of one work phase to another, but not exact details or arrangement.
5. Field verifies locations and arrangements of existing systems and equipment.

D. Installation of systems and equipment is subject to clarification as indicated in reviewed shop drawings and field coordination drawings.

1. No exception shall be made for submitted equipment that does not meet the physical dimension requirements of the originally specified equipment.

E. Concrete Anchoring:

1. Cracked concrete is the baseline condition for the design of cast-in-place and post-installed anchors in alignment with both ACI 318 and International Building Code.

1.2 SYSTEM DESCRIPTION

A. Provide materials to provide systems in compliance with performance requirements specified.

B. Provide modifications required by reviewed shop drawings and field coordinated drawings.

C. Electrical equipment associated with mechanical and plumbing equipment connections including, but not limited to, overcurrent protection, feeder sizes, motor controller and disconnect sizes, shall be coordinated with approved mechanical and plumbing shop drawings. Any revisions to electrical equipment as a result of approved mechanical and plumbing shop drawings shall be the responsibility of the Contractor. HDR shall not be responsible for issuing changes to drawings or specifications associated with these revisions. Contractor shall send a confirming RFI associated with any revisions so that HDR can acknowledge the change and confirm it is acceptable. The Contractor shall be responsible for documenting all revisions on the record drawings. Refer to Section 01 61 00 for additional information.

1.3 REFERENCES

A. Perform work in accordance with but not limited to:

1. Federal, state, and local codes, regulations, and ordinances.
2. All authorities have jurisdiction.

3. Underwriters Laboratories, Inc. (UL) requirements.
4. Occupational Safety and Health Act (OSHA).
5. Factory Mutual System (FM) requirements.
6. International Building Code (IBC).
7. NFPA-70: National Electrical Code (NEC).
8. NFPA-70E: Standard for Electrical Safety in the Workplace.
9. NFPA-72: National Fire Alarm and Signaling Code.
10. NFPA-101: Life Safety Code.
11. State of California Administrative Code.
12. California Electrical Code (CEC).

1.4 SUBMITTALS

A. Shop Drawings:

1. Electrical Conduit Routing Drawings.
    a. Dimensioned plan and section Drawings of proposed conduit routing in congested and/or exposed ceiling areas, showing the coordination with HVAC and plumbing items and architectural features in paths of conduit groups with common supports. Identify conduit by tag number of equipment served or by circuit schedule number.

B. Product Data:

1. Concrete Anchors:
    a. Document Manufacturer Approval or Listing for cracked concrete application.
        1) Drop-in anchors are not cracked concrete rated and will not be allowed.

C. Contract Closeout Information:

1. Final performance test reports.

1.5 PROTECTION

A. Provide covering and shielding equipment to protect them from damage.

B. Protect nameplates on motors and similar equipment, to prevent defacing.

C. Repair, restore or replace damaged, corroded and rejected items.

D. Comply with manufacturer’s storage, shipping and receiving requirements required to maintain full warranty.

1.6 JOB CONDITIONS

A. Examine Contract Documents to determine how other work will affect execution of electrical work. All work required for this coordination shall be included in bid.

B. Arrange and pay for permits, licenses, and inspections.

C. Cause as little interference or interruption of existing utilities and services as possible.

1. Schedule work which will cause interference or interruption in advance with Owner, Architect, authorities having jurisdiction and affected trades.

D. Determine and verify locations of existing utilities on or near site.

1. Notify Engineer of any discrepancies prior to commencing work.

E. Temporary construction power and communications (See Division 01).

F. Record drawings:

1. Keep a complete set of electrical drawings in job site office for indicating actual installation of electrical systems and equipment.
2. Use this set of drawings for no other purpose.

3. Where any material, equipment, or system components are installed differently from that indicated, indicate differences clearly and neatly using ink or indelible pencil.
4. Drawings may be electronic if using an electronic redline or markup program and utilizing contract drawing files as a base.

1.7 ENVIRONMENTAL CONDITIONS

A. General:

1. Provide NEMA 1 enclosures for electrical equipment unless otherwise indicated.

B. Conduct: See Section 26 05 33.

C. Cable: See Section 26 05 19.

D. Boxes and Fittings: See Section 26 05 34.

E. Damp and Wet Locations:

1. Exterior applications:
   a. Provide NEMA 3R enclosures for electrical equipment.

PART 2 - PRODUCTS

2.1 MANUFACTURERS

A. Concrete Anchors:

1. Hilti.
2. Simpson Strong-Tie.
3. Powers Fasteners.

2.2 MATERIALS

A. Material and Equipment:

1. Current and standard design of manufacturers regularly engaged in their production.

B. Where UL approval or listing is required in electrical specifications, suitable approval or listing from other nationally recognized testing laboratory (NRTL) is acceptable.

C. Use UL labeled electrical materials and fabricated assemblies.

D. Structural Steel for Supports:

1. ASTM A36.
2. Galvanize members installed in areas of high humidity or condensation.
3. Furnish other members with shop coat of rust inhibiting primer.
4. Shop fabricates for field assembly using bolts.
5. Minimize field welding.
6. Retouch primer and galvanize after field welding.
7. Unless support is otherwise indicated where weight of equipment exceeds 400 pounds, submit engineering design and calculations signed and sealed by a registered Engineer licensed to practice Structural Engineering in the state in which the project is located.
8. Stainless steel: Minimum 20 GA.
9. Sheet copper: Minimum 24 oz.

E. Rain Hoods and Counter Flashings, exposed to view:

1. See Section 07 62 00.

F. Access Doors, Panels and Frames:

1. See Section 08 31 13.
2. Provide where indicated on Drawings.

3. Where not indicated on Drawings, provide access panels and/or doors at walls, and inaccessible ceilings as required to permit access to equipment, devices and piping requiring service, adjustment, or inspection.
4. Size:
    a. As required to allow access, inspection, service, and removal of items served.
    b. Minimum 18 by 18 inches.

G. Concrete Anchors:

1. Cast-in-place or post-installed anchor approved for cracked concrete applications.
    a. Do not use drop-In Anchors.

H. Firestopping:

1. Maintain fire and smoke ratings where electrical items penetrate fire and fire/smoke rated building elements.
2. Firestop penetrations of fire rated walls, floors, and assemblies.
    a. Penetrations shall comply with UL listing and Fire Resistance Directory requirements for construction or assembly.
    b. Use materials and methods as specified in Section 07 84 00.

I. Industrial Control Panels:

1. The Equipment panel short circuit rating shall be greater than the available fault current rating at the panel. Panels shall not be installed where the available fault current exceeds its short-circuit current rating as marked in accordance with NFPA 70, Section 409.
2. Industrial control panels shall be marked with the following information that is plainly visible after installation:
    a. Short-circuit current rating of a listed and labeled assembly.
    b. Short-circuit current rating established using an approved method.
    c. Exception: Where control panels contain only control circuit components.
3. Available fault current shall be determined based on the available fault current (KAIC) rating identified on panelboard schedule serving equipment or the available fault current identified at equipment per the final short circuit study as required by specification section 26 05 73. Where available fault current is more than available fault current rating of control panel, control panel shall be modified to obtain minimum fault current rating using an approved method.
4. Industrial Control panels shall include (but not be limited to) equipment as follows:
    a. Variable frequency drives.
    b. Motor starters.
    c. Elevator equipment/controllers.
    d. Fire pump equipment/controllers.
    e. Duplex starter panels.
    f. Lighting control panels.

PART 3 - EXECUTION

3.1 GENERAL

A. When changes in location of any work are required, obtain approval of Architect before making change.

B. Do not change indicated sizes without written approval of Architect.

C. Provide offsets and crossovers in conduits, raceways, cable trays, and ducts.

3.2 CUTTING AND PATCHING

A. Provide cutting, fitting, repairing, patching, and finishing of installed work.

1. Include installed work of other sections where it is to disturb such work to permit installation of electrical work.
2. Repair or replace existing or new work disturbed.

B. Avoid cutting, where possible, by setting sleeves or frames, and by requesting openings in advance.

C. Before cutting, obtain approval of Structural Engineer.

1. Use only approved methods.
2. Cut holes approved by Engineer neatly to admit work.
3. Do not weaken walls or floors; locate holes in concrete to avoid structural members.

D. Locate openings and sleeves to permit neat installation of conduits and equipment.

E. Do not remove or damage fireproofing materials.

1. Install hangers, inserts, supports, and anchors prior to installation of fireproofing.
2. Repair or replace fireproofing removed or damaged, at no extra cost.

3.3 INSTALLATION

A. Install equipment in accordance with manufacturer's recommendations.

B. Anchoring Devices and Supports.

1. Use anchoring devices and structural supports suitable for equipment and install in accordance with manufacturer’s recommendations.
2. Check loadings and dimensions of equipment with shop drawings.
3. Do not cut, or weld to, building structural members.
4. Provide equipment support even though not detailed on architectural and structural drawings.

C. Verify equipment will fit support layouts indicated.

D. Provide boxes, sleeves, and devices for installation.

E. Make penetrations through roofs prior to installation of roofing.

F. For penetrations required after installation of roofing:

1. In built-up roofing (BUR), provide curbs, cants, and base flashings.
2. In elastic sheet roofing (ESR), arrange and pay for flashing work by authorized roofer.

G. Install rain hoods and metal counter flashings as indicated and make penetrations of electrical work through walls and roofs water and weathertight.

1. Furnish clamps, waterproofing material, and labor.
2. Where metal flashings are applied over concrete, paint concrete with 1/8 inches of mastic cement first.
3. Set flashing in mastic cement, watertight.

H. Have repair and replacement of roof construction, damaged by this work, done in manner which will not nullify roof warranty.

I. Install equipment to permit easy access for normal maintenance.

1. Maintain easy access to switches, motors, drives, pull boxes, receptacles, etc.
2. Relocate items which interfere with access.

J. Provide concrete foundations (isolation pads) or housekeeping pads for floor mounted electrical equipment as follows unless otherwise indicated:

1. Install nominal 3.5 inches high concrete housekeeping pads. Outside dimension of pad shall be at least 3.5 inches larger in all directions than base of equipment or 228 mm 9 inches from center of anchor, whichever is greater.

2. Use 3,000 psi concrete.
3. Reinforce with No.4 bars, 12 inches on-center each way, with short No.4 dowels on floor at 24 inches on-center each way.
4. Top surface shall be level. The use of shims underneath equipment is strictly prohibited.
5. Chamfer top edges 3/4 inches.
6. Make faces smooth.
7. Set anchor bolts for equipment.

3.4 FIELD QUALITY CONTROL

A. Perform indicated tests to demonstrate workmanship, operation, and performance.

1. Conduct tests in presence of Architect and, if required, inspectors of agencies having jurisdiction.
2. Arrange date of tests in advance with Architect, manufacturer, and installer.
3. Give minimum of 24 hours' notice to inspectors.
4. Furnish or arrange for use of electrical energy, steam, water, diesel fuel, or gas required for tests.
5. Furnish lubricating materials required for test.

B. Repair or replace equipment and systems found inoperative or defective and retest.

1. If equipment or system fails retest, replace it with products conforming with Contract Documents.
2. Continue remedial measures and retests until satisfactory results are obtained.

C. Test equipment and systems as indicated for each item, unless otherwise recommended by manufacturer.

3.5 FINAL PERFORMANCE TEST

A. Perform panel load balance, short circuit, and freedom from ground, and ground test (including ground fault protection where provided).

1. As part of putting systems in operation, provide tabulated results of load balance and voltage at each switchboard, panelboard, and motor control center. Use true RMS measuring metering devices.
2. Provide neutral to ground resistance tests to prove neutral is grounded in only one location.
3. Provide ground test at service entrance and provide report on resistance to earth of the grounding electrode system.
4. See individual specifications for additional testing and commissioning.

3.6 ADJUST AND CLEAN

A. Inspect equipment and put in good working order.

B. Clean exposed and concealed items.

C. Where new work occurs in existing areas where no other work has been done, clean area and restore it to original condition.

3.7 PUTTING SYSTEMS IN OPERATION - START-UP

A. Put systems into satisfactory operation prior to final acceptance, at time agreed to by Construction Manager, Owner, and Architect.

B. Operate systems in good working order for period of 5 working days.

3.8 DEVICE MOUNTING

A. See symbol legend for device mounting heights unless otherwise noted.

1. Mounting heights indicated on legend shall supersede Architectural and Interiors elevations.

B. Dimensions are to center of device unless otherwise indicated.

C. All light switches and/or lighting control wall stations shall be mounted within 12 inches measured horizontally from the door frame or wall opening used to enter the space.

D. Coordinate device locations with equipment/furnishings abutting walls such as, but not limited to, architectural millwork, casework, lockers, mirrors, and equipment. Refer to architectural and casework/equipment elevations to facilitate coordination of device placement. Devices shall be relocated at Contractor's expense if conflict exists after installation.

E. Coordinate device mounting height with wainscoting where provided. Where top of wainscot and device mounting height overlaps, shift device down to provide 2 inches gap between top of device and top of wainscot.

F. Coordinate device locations with wall-mounted alcohol-based hand rub dispensers.

1. Electrical receptacles, switches, or other devices shall not be installed above, below, or closer than 1 inch to a dispenser.

G. Locate exit signs and fire alarm flashing lights so that all are visible from corridor locations. Relocate and/or add signs as required to resolve conflicts.

PART 4 - MEASUREMENT AND PAYMENT

4.1 MEASUREMENT

A. All work related to "Electrical Relocation (By Type)" shall be measured by the Lump Sum. Measurements should be based on individual items being relocated to include Lighting Panel and Lighting Control Panel, Fire Alarm Panel, and Exit Signs.

B. All work related to the "Electrical Installation of Overhead Coiling Fire Doors" shall be measured by unit. Measurements shall be based on the quantity of Overhead Coiling Fire Doors installed.

4.2 PAYMENT

A. The contract price paid per lump sum for "Electrical Relocation (By Type)" shall include full compensation for furnishing all labor, materials, tools, equipment, and incidentals and for doing all the work involved in "Electrical Relocation (By Type)", complete in place, including the tracing, consolidation, and extension of existing circuits, relocation of electrical panels and fixtures, and all incidental materials, as shown on the plans, as specified in the Standard and Technical Specifications.

B. The contract price paid per unit for "Electrical Installation of Overhead Coiling Fire Doors" shall include full compensation for furnishing all labor, materials, tools, equipment, and incidentals and for doing all the work involved in "Electrical Installation of Overhead Coiling Fire Doors", complete in place including Conduits, Cables, Boxes, Overcurrent Protection Devices, Enclosed Safety Switches, and all incidental materials, as shown on the plans, as specified in the Standard and Technical Specifications.

END OF SECTION

SECTION 26 05 19
LOW VOLTAGE ELECTRICAL POWER CONDUCTORS AND CABLES

PART 1 - GENERAL

1.1 SUMMARY

A. Furnish labor, materials, tools, equipment, and services for Low Voltage Electrical Power Conductors and Cables, as indicated, in accordance with provisions of Contract Documents.

B. Completely coordinate with work of other trades.

C. Low voltage to include all systems with line voltage of 0 V to 1000 V.

1.2 SUBMITTALS

A. Product Data:

1. Provide manufacturer's standard catalog pages and data sheets for conductors and cables, including detailed information on materials, construction, ratings, listings, and available sizes, configurations, and stranding.

1.3 DELIVERY, STORAGE, AND HANDLING

A. Receive, inspect, handle, and store conductors and cables in accordance with manufacturer's instructions.

1.4 FIELD CONDITIONS

A. Do not install or otherwise handle thermoplastic-insulated conductors at temperatures lower than 14 degrees F, unless otherwise permitted by manufacturer's instructions. When installation below this temperature is unavoidable, notify Engineer and obtain direction before proceeding with work.

PART 2 - PRODUCTS

2.1 MANUFACTURERS

A. Conductors and Cables:

1. Base.
   a. American Insulated Wire Corp.
   b. General Cable Corporation.
   c. Senator Wire & Cable Company.
   d. Southwire Company.

B. Splices and taps for smaller than No. 6 AWG wire:

1. Base:
   a. 3M.
   b. Ideal Electric.
   c. Heyco Molded Products.
   d. Elastimold.
   e. Buchanan Construction Products.
   f. WAGO.

C. Insulated Multi-tap connectors:

1. Base:
   a. Burndy.
   b. ILSCO.
   c. NSI.

2.2 CONDUCTOR AND CABLE GENERAL REQUIREMENTS

A. Provide products that comply with requirements of NFPA 70 and NEMA WC 70.

B. Provide products listed, classified, and labeled as suitable for the purpose intended.

C. Unless specifically indicated to be excluded, provide all required conduit, boxes, wiring, connectors, etc., as required for a complete functional circuitry system.

D. Thermoplastic-Insulated Conductors and Cables:

1. Listed and labeled as complying with UL 83.

E. Thermoset-Insulated Conductors and Cables:

1. Listed and labeled as complying with UL 44.

F. Size conductors to match over current/overload protective device unless larger conductors are indicated or required due to voltage drop or other considerations.

G. For line voltage of 100 V and larger: Use no wire smaller than No. 12 AWG, except only where specifically indicated.

H. No. 10 AWG conductors are to be used for 20 A, 120 V circuits exceeding 100 feet.

I. No. 10 AWG conductors are to be used for 20 A, 277 V circuits exceeding 200 feet.

J. Grounding conductors shall be insulated, unless installed exposed in plenum spaces or otherwise noted.

K. For line voltage of 0 to 30 V for lighting control/signal circuits: Use no wire smaller than No. 18 AWG.

1. Wire gauge shall be increased up to No. 14 AWG where voltage drop is a concern.
2. Wire shall be a shielded twisted pair with stranded copper conductors.
3. Minimum insulation value shall be 300 V for Class 2 circuits and 600 V for Class 1 circuits.

L. For line voltage of 100 V and larger: Use no wire smaller than No. 12 AWG, except as follows:

1. Smaller size wire may be used only where specifically indicated.

M. Color-coding: Color code conductors in accordance with NFPA 70 as follows:

1. Color code all wiring.
2. Color-coding of conductor ends will only be acceptable for feeder phase conductors.
3. Color-coding of conductor ends will only be acceptable for neutral and grounding conductors No. 4 AWG and larger.

2.3 CONDUCTOR MATERIAL

A. Provide copper conductors except where aluminum conductors are specifically indicated or permitted for substitution. All conductor sizes indicated are based on copper unless specifically indicated as aluminum.

B. Copper Conductors:

1. Soft drawn annealed, 98 percent conductivity, uncoated copper conductors complying with ASTM B3, ASTM B8, or ASTM B787/B787M unless otherwise indicated.

C. Tinned Copper Conductors: Comply with ASTM B33.

2.4 SINGLE CONDUCTOR INSULATED BUILDING WIRE

A. Insulation:

1. For service entrance: Type THWN/THHN or XHHW-2.
2. For feeders and branch circuits as defined by NFPA 70: Type THWN/THHN or XHHW-2.
3. For exterior feeder and branch circuits as defined by NFPA 70: Type XHHW-2.

B. For branch circuits served by GFCI circuit breakers: Type XHHW-2.Conductor Stranding:

1. Feeders and Branch Circuits:
   a. Size No. 10 AWG and Smaller: Solid.
   b. Size No. 8 AWG and Larger: Stranded.
2. Power and communication connections to motors and to generators shall be with stranded conductors.

C. Insulation Voltage Rating: 600 V.

D. Provide UL listed 2-hour fire rated circuits were indicated on the drawings and/or required by Code. Utilize 2-hour rated type MI, RHW-2 or MC power cable except where circuit is enclosed in 2-hour rated construction or encased in concrete or brick not less than 2 inches thick.

2.5 WIRING CONNECTORS

A. Description: Wiring connectors appropriate for the application, suitable for use with the conductors to be connected, and listed as complying with UL 486A-486B or UL 486C as applicable.

B. Wiring Connectors for Splices and Taps:

1. General: Do not make splices and taps with crimp or indenter-type connectors.

C. Splices and taps for smaller than No. 6 AWG wire:

1. Use Wirenuts, spring-type connectors or compact splicing connectors.

D. Splices and taps for No. 6 AWG wire and larger:

1. Use compression connectors with pre-stretched insulation to equal insulation of wire being spliced.

E. Pre-Insulated Multi-Tap Connectors:

1. Removable wire port plugs and set screw covers. Pre-filled with oxide inhibitor.

F. Wiring Connectors for Terminations:

1. Provide terminal lugs for connecting conductors to equipment furnished with terminations designed for terminal lugs.
2. Copper Conductors sized No. 8 AWG and Larger: Use mechanical connectors or compression connectors where connectors are required.

2.6 ACCESSORIES

A. Electrical Tape:

1. Vinyl Color Coding Electrical Tape:
   a. Integrally colored to match color code indicated; listed as complying with UL 510.
   b. Minimum thickness of 7 mil; resistant to abrasion, corrosion, and sunlight; suitable for continuous temperature environment up to 221 deg F.
2. Vinyl Insulating Electrical Tape:
   a. Complying with ASTM D3005 and listed as complying with UL 510.
   b. Minimum thickness of 7 mil; resistant to abrasion, corrosion, and sunlight; conformable for application down to 0 deg F and suitable for continuous temperature environment up to 221 deg F.

B. Heat Shrink Tubing:

1. Heavy-wall, split-resistant, with factory-applied adhesive; rated 600 V; suitable for direct burial applications; listed as complying with UL 486D.

C. Oxide Inhibiting Compound:

1. Listed; suitable for use with the conductors or cables to be installed.

D. Wire Pulling Lubricant:

1. Listed; suitable for use with the conductors or cables to be installed and suitable for use at the installation temperature. Do not use cable pulling lubrication compound containing petroleum or other products which may deteriorate insulation cable

E. Ties:

1. Material and tensile strength ratings are suitable for application.

PART 3 - EXECUTION

3.1 INSTALLATION

A. General Requirements:

1. Perform work in accordance with NECA 1 (general workmanship).
2. Unless dimensioned, circuit routing indicated is diagrammatic.
   a. When circuit destination is indicated without specific routing, determine exact routing required.
3. Maintain separation of Class 1, Class 2, and Class 3 remote-control, signaling, and power-limited circuits in accordance with NFPA 70.
4. Maintain separation of wiring for Emergency, Legally Required, and Optional Standby systems in accordance with NEC Sections 700, 701 and 702.
5. Maintain separation of wiring for Life Safety, Critical and Equipment systems in accordance with NEC Section 517.
6. Paralleled Conductors in Multiset Feeders: Install conductors of the same length and terminate in the same manner.
7. Terminate cables using suitable fittings.
8. Install conductors with a minimum of 12 inches of slack at each outlet.
9. Neatly trail and bundle conductors inside boxes, wireways, panelboards and other equipment enclosures.
10. Group or otherwise identify neutral and equipment grounding conductors with associated ungrounded conductors inside enclosures in accordance with NFPA 70.
11. Remove appropriate amount of conductor insulation for making connections without cutting, nicking, or damaging conductors. Do not remove conductor strands to facilitate insertion into connector.
12. Clean contact surfaces on conductors and connectors to suitable remove corrosion, oxides, and other contaminates. Do not use wire brush on plated connector surfaces.
13. Insulate ends of spare conductors using vinyl insulating electrical tape.
14. Provide firestopping for electrical penetrations of fire-rated floor and wall assemblies to preserve restore original fire-resistance rating of assembly.
15. Conductors not noted on plan shall be sized to overcurrent protective device feeding circuit. See feeder schedule on plans for requirements.
16. Unless specifically indicated to be excluded, provide final connections to all equipment and devices, including those furnished by others, as required for a complete operating system.

B. Connections:

1. Make wiring connections using specified wiring connectors.
2. Mechanical Connectors:
   a. Secure connections according to manufacturer's recommended torque settings.
3. Compression Connectors:
   a. Secure connections using manufacturer's recommended tools and dies.

C. Installation in Raceway:

1. Install wiring in conduit unless otherwise indicated.
   a. Install no more than 3 phase conductors (A-B-C) in one conduit.

b. Provide a separate neutral conductor for each phase conductor in receptacle branch circuits, appliance branch circuits, and lighting branch circuits.

c. When more than three current-carrying conductors (which include separate neutral conductors for single phase circuits) are installed in a single conduit, wiring shall be derated in accordance with NEC 310.15.

2. Tape ends of conductors and cables to prevent infiltration of moisture and other contaminants.

3. Pull all conductors and cables together into raceway at same time.

4. Do not damage conductors and cables or exceed manufacturer's recommended maximum pulling tension and sidewall pressure.

5. Use suitable pulling means and wire pulling lubricant where necessary, except when lubricant is not recommended by the manufacturer.

D. Splicing Requirements:

1. Arrange circuiting to minimize splices.

2. Insulate splices and taps that are made with uninsulated connectors using methods suitable for the application, with insulation and mechanical strength at least equivalent to unspliced conductors.

3. Include circuit lengths required to install connected devices within 10 feet of location indicated.

4. Make splices and taps only in accessible boxes. Do not pull splices into raceways or make splices in conduit bodies or wiring gutters.

5. Underground conductors shall not be spliced.

E. Lighting control cabling:

1. 0-10 V control wires shall be allowed to be routed in the same conduit as line voltage wires (in a Class 1 configuration) when routed from fixture to fixture (and to area lighting controller(s) as applicable) within a room, provided that the 0-10 V wire insulation meets NEC requirements.

2. When 0-10 V wires are routed between rooms or if the cable length exceeds 50 feet, wires shall be routed in a Class 2 configuration as follows:

a. When above an accessible ceiling and concealed from view, 0-10 V wires may be routed on the outside of the line voltage conduit and attached to conduit via Velcro cable straps.

b. When routed in an exposed ceiling or above an inaccessible ceiling, 0-10 V wires shall be routed in their own dedicated conduit.

3. Plenum-rated, pre-terminated CAT5 or similar digital lighting management (DLM) cables with RJ45 connectors are not allowed to be routed in the same conduit as line voltage wires.

a. When above an accessible ceiling and concealed from view, DLM wires may be routed on the outside of the line voltage conduit and attached to conduit via Velcro cable straps.

b. When routed in an exposed ceiling or above an inaccessible ceiling, DLM wires shall be routed in their own dedicated conduit.

4. All lighting control cabling originating at a wall-mounted switch box shall be routed in a conduit stub-up from the box to above an accessible ceiling, or in conduit directly to a load controller or luminaire in an exposed ceiling area.

PART 4 - MEASUREMENT AND PAYMENT

4.1 MEASUREMENT

A. No separate measurement will be made for the requirements of this section and shall be included in the measurement of Section 26 05 10 – Electrical General Requirements.

4.2 PAYMENT

A. No separate payment will be made for the requirements of this section unless specifically noted for separate payment as stated herein. Full compensation for complying with the requirements of this section for furnishing all labor, materials, tools, equipment, and incidentals and for doing all the work involved in this section, shall be considered as included in contract prices paid for the various items of work involved, and no additional compensation will be allowed, therefore.

END OF SECTION

SECTION 26 05 33
CONDUITS

PART 1 - GENERAL

1.1 SUMMARY

A. Furnish labor, materials, tools, equipment, and services for Conduits, as indicated, in accordance with provisions of Contract Documents.

B. Conduit runs are diagrammatic. Verify and coordinate locations in field.

C. Completely coordinate with work of other trades.

1.2 SUBMITTALS

A. Product Data:

1. Manufacturer's data for each product specified.
2. IBC Certificates of Compliance.

1.3 QUALITY ASSURANCE

A. Regulatory Requirements:

1. Electrical Components, Devices, and Accessories shall be listed and labeled in accordance with NFPA 70, Article 100, by testing agency acceptable to authorities having jurisdiction, and marked for intended use.
2. Application and installation of conduits shall be in full compliance with requirements of applicable edition of NFPA 70 for each conduit type.

B. Certifications:

1. Conduct: Stamp each length with name or trade mark of manufacturer and affix UL label.

PART 2 - PRODUCTS

2.1 MANUFACTURERS

A. As noted for each type listed below.

2.2 MATERIALS

A. Rigid Metal Conduit (RMC):

1. Manufacturers:
   a. Base:
      1) Allied Tube and Conduit Corp.
   b. Optional:
      1) Republic Conduit.
      2) Wheatland Tube.
2. Materials
   a. Hot dipped galvanized, or sherardized, including threads.
   b. Standard pipe thread with coupling; deliver with thread protector and end caps.
   c. Standards:
      1) NEMA/ANSI C80.1 – Electrical Rigid Steel Conduit – Zinc Coated (ERSC).
      2) UL 6 - Electrical Rigid Metal Conduit – Steel.

B. Intermediate Metal Conduit (IMC):

1. Manufacturers:
   a. Base:

1) Allied Tube and Conduit Corp.
b. Optional:
1) Republic Conduit.
2) Wheatland Tube.
2. Materials
a. Hot dipped galvanized steel of intermediate wall thickness including threads.
b. Standard pipe thread with coupling; deliver with thread protector and end caps.
c. Standards:
1) NEMA/ANSI C80.6 –Electrical Intermediate Metal Conduit (EIMC).
2) UL 1242 - Standard for Electrical Intermediate Metal Conduit – Steel.

C. Flexible Metal Conduit (FMC):
1. Manufacturers:
a. Base:
1) Anamet Electrical.
b. Optional:
1) Electri-Flex.
2) AFC.
3) International Metal Hose.
2. Materials
a. Steel, hot dipped galvanized.
b. Standards:
1) UL 1 – Standard for Flexible Metal Conduit.

D. Liquid-Tight Flexible Metal Conduit (LFMC):
1. Manufacturers based on specification compliance:
a. Base:
1) Anamet Electrical.
b. Optional:
1) Electri-Flex.
2) AFC.
3) International Metal Hose.
2. Materials
a. Steel, hot dipped galvanized with PVC jacket.
b. Standards:
1) UL 360 – Standard for Liquid-Tight Steel Conduit.

E. Rigid Polyvinyl Chloride Nonmetallic Conduit (PVC):
1. Manufacturers:
a. Base:
1) Carlon.
b. Optional:
1) Allied.
2) Cantex.
2. Materials
a. Schedule 40 or 80, meeting minimum requirements of NEC.
b. Standards:
1) UL 651 - Standard for Schedule 40 and 80 Rigid PVC Conduit and Fittings.

2) NEMA TC-2 and TC-3 – Electrical Polyvinyl Chloride (PVC) Tubing and Conduit.

F. Conduit Fittings:

1. Manufacturers:
   a. Base:
      1) Appleton Electric.
   b. Optional:
      1) Cooper Crouse-Hinds.
      2) Killark.
      3) Thomas & Betts.
      4) O-Z/Gedney.
2. Materials
   a. Standards:
      1) ANSI/NEMA FB-1 – Fittings, Cast metal Boxes, and Conduit Bodies for Conduit, Electrical Metallic Tubing, and Cable.
      2) UL 514B - Conduit, Tubing, and Cable Fittings.
   b. RMC Fittings
      1) Threaded cast ferrous alloy with corrosion resistant finish. Cast body with gasketed corrosion resistant screw cover and threaded hubs.
      2) Not Approved: Zinc alloy and similar soft metal die castings.
   c. IMC Fittings:
      1) Threaded cast ferrous alloy with corrosion resistant finish. Cast body with gasketed screw cover and threaded hubs.
      2) Not Approved: Zinc alloy and similar soft metal die castings.
   d. EMT Fittings:
      1) Steel compression-ring type.

Set screw type fitting with pressure-cast bodies for 3/4 inches conduit and smaller and steel body and cup type screws for 1 inch conduit and larger

   e. FMC Fittings:
      1) Dry locations: Squeeze type, malleable iron, zinc-nickel plated, straight and angle connectors for all sizes except twist-in connectors for 3/4 inches and below flexible metal conduit.
      2) Damp or wet locations: liquid-tight connectors.
   f. PVC Conduit Fittings:
      1) PVC plastic solvent weld type, with threaded adapters as required.
   g. Bushings:
      1) Threaded, galvanized, malleable iron.
      2) Bushings for conductors No. 4 AWG and larger: Separate insulated bushings.
         a) Do not use insulated throat connectors.
      3) Grounding bushings: With screw termination for green grounding wire.

G. Expansion Fittings:

1. Manufacturers:
   a. Base:
      1) Cooper Crouse – Hinds.
   b. Optional:
      1) O-Z/Gedney.
      2) Appleton Electric.
2. Materials

a. Description:
1) Watertight deflection type cast slip joint fitting for conduit, with flexible bonding conductor for continuity of ground through metallic conduit.
b. Design Standards:
1) O-Z/Gedney: Type DX.
2) Cooper Crouse-Hinds: Type XJG.

H. Inserts and Attachments:
1. Select inserts and attachments to suit loading conditions.
a. See Section 01 31 11 for load limitations where more than one trade may be applying loads to device.
2. Inserts For Placement in Concrete Formwork:
a. Malleable iron, wedge with nut, galvanized finish.
b. Size inserts to suit threaded hanger rods.
3. Attachments to Existing Construction:
a. Malleable iron, wedge, galvanized finish.
4. Use plastic toggles were securing directly to drywall.

I. Supports, Sleeves and Seals:
1. Conduit supports:
a. Standards:
1) UL 2239 – Hardware for the Support of Conduit, Tubing, and Cable.
2) Listed and in compliance with other applicable standards.
b. Designed specifically for electrical installations.
c. Hangers:
1) Steel zinc-nickel plated threaded rods with straps or clamp conduit holder.
d. Straps:
1) One-hole and two-hole malleable iron, hot-dipped galvanized or steel, zinc-nickel or zinc plated.
e. Beam Clamps:
1) Malleable iron, hot-dipped galvanized or zinc-nickel plated.
f. Channels and Fittings:
1) Channels: Hot-dipped galvanized.
2) Fittings: Galvanized.
g. Trapeze assemblies:
1) Constructed from channels and supported by at least two threaded rods attached to building structure.
2. Sleeves:
a. Black iron pipe, RMC, or IMC sized to accommodate work passing through.
3. Sealer for sleeves and openings around conduit:
a. UL listed for assembly.
b. See Section 07 84 00.
4. Sealer for use inside conduits:
a. Manufacturers:
1) Base:
a) Arnco.
2) Optional:
a) Polywater.

b. Materials
   1) Description:
      a) Watertight / Air tight foam sealant for electrical conduit.
      b) Listed for application with electrical wiring and conduit.
   2) Design Standards:
      a) Arnco: Hydra-Seal.
      b) Polywater: FST Duct Sealant.

PART 3 - EXECUTION

3.1 SCHEDULE OF CONDUIT UTILIZATION

A. Use no conduit smaller than 3/4 inches.

B. Size conduit in accordance with NEC unless indicated larger.

C. Rigid Steel Conduit (RMC) or Intermediate Metal Conduit (IMC) shall be used in following locations unless otherwise noted:
   1. Outdoors exposed.
   2. In exterior masonry walls.
   3. In wet locations.
   4. For exposed interior runs below 10 feet above finished floor and/or where subject to severe physical damage, unless otherwise indicated.
   5. For feeders over 1000 volts.

D. Flexible metal conduit (FMC) shall be used for dry interior applications limited to:
   1. For connection to luminaires above suspended ceilings.
   2. In listed office furnishings.
   3. In architectural millwork and casework.
   4. Where fished into existing walls or ceilings, not otherwise accessible and not subject to physical damage.

E. Liquid-tight flexible metal conduit (LFMC) shall be used for applications including, but not limited to:
   1. All damp and wet locations.
   2. For connection to equipment subject to vibration.
   3. Mechanical equipment connections, not exceeding 36 inches in length.

F. Rigid polyvinyl chloride non-metallic conduit (PVC) may be used subject to following:
   1. Do not use exposed PVC conduit unless otherwise noted.
   2. Provide a 1000 V, insulated, green grounding conductor in each PVC conduit.
      a. Power circuits: Proper ampacity per NEC.
      b. Communications circuits: No. 12 AWG minimum.
   3. 45 degrees and greater bends in PVC conduit runs larger than 1-1/2 inches shall be made with rigid steel conduit.
   4. Schedule 80 PVC conduit may be used as follows:
      a. Routing of grounding electrode system conductors and telecommunications ground backbone runs below and above grade and stubs through concrete slabs on grade.
   5. Direct-burial Schedule 40 PVC or concrete-encased Type EB may be used as follows:
      a. Exterior Lighting: See Section 26 56 00.
      b. Voice and data systems where underground and in or under concrete slabs on grade.
      c. Underground and concrete encased conduits over 1000 V.
      d. For 1000 V and below:

1) Underground and concrete encased conduits 1000 V and below for feeders and branch circuits.

3.2 INSTALLATION - GENERAL

A. Provide separate conduit systems for all lighting, power, and communications systems, unless otherwise indicated.

1. Separate systems of different branches of power.
2. Separate systems of different voltage classes into different conduit systems unless otherwise noted.
   a. Do not combine wiring for 208/120 V and 480/277 V circuits in common wireways or pull boxes.
3. Provide dedicated junction boxes and pull boxes to separate wiring systems.

B. Where practical, group home runs to same panelboard.

1. Do not enclose more than three single phase circuits or one three phase circuit in one raceway unless noted otherwise.

C. Only nylon or polyethylene rope shall be used to pull wire and cable in conduit systems.

D. Moisture and debris protection:

1. Clean interior of conduits to remove moisture and foreign matter.
2. Immediately after installation of conduit, use suitable manufactured plugs to provide protection from entry of moisture and foreign material and do not remove until ready for installation of conductors.
3. Condensation Prevention: Where conduits cross barriers between areas of potential substantial temperature differential, provide sealing fitting or approved sealing compound at an accessible point near the penetration to prevent condensation. This includes, but is not limited to:
   a. Where conduits pass from outdoors (above and below grade) into conditioned interior spaces.
   b. Where conduits pass from unconditioned interior spaces into conditioned interior spaces.

E. Make conduit field cuts square and ream to full size.

1. Shoulder conduit in couplings.

F. Do not install conduit under pads for fans, pumps, boilers, or other machinery.

G. Seal and waterproof penetrations of floor slab at mechanical rooms above grade.

1. Where required to preserve fire resistance rating of partitions and other elements, use materials and methods specified in Section 07 84 00.
2. Where conduits penetrate a waterproof membrane, seal as required to maintain integrity of membrane.

H. Provide sealing fittings on rigid galvanized conduit in hazardous areas and install in accordance with NEC.

I. Conduit bends:

1. Make field bends with tools designed for conduit bending.
   a. Heating of metallic conduit to facilitate bending is not permitted.
2. Hand conduit bender may be used on 3/4 inches RMC, IMC or EMT conduit and 1 inch EMT conduit.
   a. Use conduit bending machine for larger sizes.
3. Make no bends with radius less than 12 times diameter of associated cable.

4. Make no bends with radius less than 6 times the diameter of telecommunications conduits up to 2 inches, or less than 10 times the diameter of telecommunications conduits greater than 2 inches.
5. No conduit bends shall exceed 90 degrees.

J. Angles:

1. Sum of angles in any power conduit run shall not exceed 360 degrees.
2. Sum of angles in any telecommunications conduit run shall not exceed 180 degrees.
   a. Provide pull boxes every 100 feet in telecommunications conduit runs.

K. Provide conduit bodies, junction boxes, or pull boxes when the maximum number of bends have been exceeded.

1. Covers shall be accessible.
2. Conduit bodies for power circuits may be used as follows:
   a. On exposed runs at junctions, bends, or offsets where splices are not required.
   b. Around outside corners of walls and equipment or around beams.
   c. Conduit bodies are not allowed for use with conduits containing telecommunication cables.

L. Connections and Terminations:

1. Use approved zinc-rich paint or conduit joint compound on field-cut threads of galvanized steel conduits prior to making connections.
2. Where two threaded conduits must be joined and neither can be rotated, use three-piece couplings or split couplings. Do not use running threads.
3. Use suitable adapters where required to transition from one type of conduit to another.
4. Terminate threaded conduits in boxes and enclosures using threaded hubs or double lock nuts for dry locations and raintight hubs for wet locations.
5. Provide insulating bushings or insulated throats at all conduit terminations to protect conductors.
6. Secure joints and connections to provide maximum mechanical strength and electrical continuity.

M. Provide grounding and bonding in accordance with Section 26 05 26.

N. Coordinate minimum sizes of conduits with the actual conductors to be installed, including adjustments for conductor sizes increased for voltage drop.

O. Sequencing:

1. Do not begin installation of conductors and cables until installation of conduit is complete between outlet, junction, and splicing points.

P. Trade Coordination:

1. Coordinate the arrangement of conduits with structural members, ductwork, piping, equipment, and other potential conflicts installed under other sections or by others.
2. Verify exact conduit termination locations required for boxes, enclosures, and equipment installed under other sections or by others.
3. Coordinate the work with other trades to provide roof penetrations that preserve the integrity of the roofing system and do not void the roof warranty.

Q. Empty conduits:

1. Install 3/16 inches minimum diameter polypropylene or nylon pull-line from end to end with tag at each end designating opposite terminus.

R. Make joints in threaded conduit watertight with white nonleaded compound applied to male threads only.

1. Cut square, ream smooth, and properly thread field joints to receive couplings.
2. Do not use running threads.

S. Electrical conduit installation shall maximize the ability to install additional conduit in the future. Contractor to submit coordination drawings per section 26 00 10 indicating final routing of conduit systems.

3.3 INSTALLATION OF CONDUIT ABOVE GRADE

A. Unless otherwise noted, install conduits concealed within walls and above finished ceilings.

B. Do not run horizontally in CMU.

C. Run conduit in straight lines at right angles to or parallel with walls, beams, or columns.

D. Keep conduit away from uninsulated hot water and steam pipes.

1. Where crossings are unavoidable, leave minimum 6 inches clearance.

E. Avoid running conduits underneath water lines except for crossings.

F. Do not cross conduit in front of access door in HVAC duct.

G. Provide conduit support designed for building structural conditions to carry load imposed.

H. Provide inserts or fasteners to attach hangers to structure.

1. Attachment to metal roof deck may be by means of pre-punched tabs, pre-punched holes, or with screws in sides of ribs or toggle bolts in bottom of ribs.
2. Space hangers in joints between precast units at minimum 4 inches from walls.

I. Use trapeze assemblies to support multiple conduits.

1. Coordinate layout to provide adequate access to cable tray assemblies if applicable.

J. Installation of conduit or rack of conduits shall not interfere with placement of specified luminaires.

K. Hangers in roof deck:

1. Do not extend above tops of ribs, or otherwise interfere with vapor retarder, insulation, or roofing.

L. Make penetrations for roof-mounted equipment within associated equipment openings and curbs where it is possible to minimize roofing system penetrations. Where penetration is necessary, seal as indicated or as required to preserve integrity of roofing system and maintain roof warranty.

M. Independently support conduit systems from building structure or walls with approved hangers.

1. Do not use following to support conduit:
   a. Wire including ceiling support wires.
   b. Perforated strap hangers.
   c. Plastic or nylon tie wraps.
2. Do not support from piping, ducts or support systems for piping or ducts.
3. Do not support from ceiling or ceiling support systems.
4. Do not install to prevent ready removal of equipment, piping, ducts, or ceiling tiles.
5. Do not support from drywall.

N. Support suspended conduits within 300 mm 12 inches of any change of direction of 45 degrees or greater.

O. Neatly seal openings around conduits, etc., where they pass through fire rated construction or exterior walls or roof. Provide proper rated seal for fire-rated penetrations.

P. No exterior horizontal roof supported conduit runs are permitted in lengths exceeding 6 feet unless indicated otherwise.

Q. Conduit stub-outs:

1. Extend conduit stub-out to cable tray system and attach to edge of tray with cable tray manufacturer recommended coupling.
2. Terminate conduit with insulating bushing.

R. Install rigid conduits squarely into boxes.

1. Rigidly clamp to box with locknut on outside and inside and provide bushing on inside.

S. Fit all conduit ends at switch and outlet boxes with approved lock nuts and bushing forming approved tight bond with box when screwed tightly in place.

T. Above lay-in tile ceilings, make connections to lay-in type luminaires with flexible steel conduit no longer than 6 feet.

1. Conduit shall be supported to structure or support wires above ceiling. Do not install on ceiling or ceiling tiles.
   a. Zip ties shall not be used as a means of attachment.
2. Arrange conduit and box systems for easy removal of lay-in ceiling.

U. Provide connections to door security devices in hollow metal jamb posts using 1/2 inches flexible steel conduit.

V. Provide expansion joint fittings as follows:

1. On conduit at all building expansion or control joints where conduit is rigidly attached to structure.
2. Where necessary to compensate for thermal expansion and contraction.
3. Flexible metal conduit may be used for expansion fittings on runs smaller than 1 inch where exposed or concealed above suspended ceilings.
   a. Leave slack in conduit for movement.
   b. Fasten on each side of joint.

W. Provide junction box with duct-seal on raceways subject to different temperatures including but not limited to:

1. Conduits passing from interior to exterior of structure.
2. Conduits serving cold storage rooms, freezers, and refrigeration equipment.

X. When roof exhaust fans are equipped with housing conduit entries and integral disconnects, install conduit to roof exhaust fans through fan housing with no conduit exposed.

3.4 INSTALLATION OF CONDUIT WITHIN OR THROUGH STRUCTURAL ELEMENTS

A. Conduit shall not be installed within structural elements, i.e., concrete columns, beams, decks, or slabs unless otherwise noted.

1. Conduit in concrete columns:
   a. Install no conduit larger than 3/4 inches in concrete columns.
   b. Do not install multiple conduits in a single concrete column without the Structural Engineers approval.
2. Conduit in slab on grade:
   a. The outside diameter of a single conduit or vertical dimension of two or more stacked conduits (including crossovers) shall not exceed 1/3 the thickness of the slab.
   b. The outside horizontal dimension of two or more adjacent conduits shall not exceed twice the depth of the slab and the separation between groups of conduits shall not be less than the thickness of the slab.
3. Conduit in elevated slabs on metal deck:
   a. Do not install conduit in concrete slabs on metal deck without the Structural Engineer’s approval except as follows:

1) The outside diameter of a single conduit or vertical dimension of two or more stacked conduits (including crossovers) shall not exceed 1/5 the total thickness of the slab.
2) The outside horizontal dimension of two or more adjacent conduits shall not exceed the total thickness of the slab and the separation between groups of conduits shall not be less than the total thickness of the slab.
3) The conduit shall have a minimum concrete cover of 3/4 inches top and bottom.

4. Conduit in elevated slabs:
   a. Do not install conduit in elevated concrete slabs without the Structural Engineer's approval except as follows:
      1) The outside diameter of a single conduit or vertical dimension of two or more stacked conduits (including crossovers) shall not exceed 1/5 the thickness of the slab.
      2) The outside horizontal dimension of two or more adjacent conduits shall not exceed the thickness of the slab and the separation between groups of conduits shall not be less than the thickness of the slab.
      3) The conduit shall have a minimum concrete cover of 3/4 inches top and bottom.

B. Conduit penetrations passing through concrete walls, decks, or slabs:
   1. All core drilling, sleeves, block-outs, and other penetrations must be approved by Structural Engineer prior to installation.
   2. Provide sleeves for penetrations as indicated or as required to facilitate installation. Set sleeves flush with exposed surfaces unless otherwise indicated or required.
      a. Space sleeves and core drills to ensure minimum of three (3) times nominal trade diameter of largest adjacent conduit between sleeves or core drills.
   3. Use block-outs for concentrations of conduits in confined area.

PART 4 - MEASUREMENT AND PAYMENT

4.1 MEASUREMENT

A. No separate measurement will be made for the requirements of this section and shall be included in the measurement of Section 26 05 10 – Electrical General Requirements.

4.2 PAYMENT

A. No separate payment will be made for the requirements of this section unless specifically noted for separate payment as stated herein. Full compensation for complying with the requirements of this section for furnishing all labor, materials, tools, equipment, and incidentals and for doing all the work involved in this section, shall be considered as included in contract prices paid for the various items of work involved, and no additional compensation will be allowed, therefore.

END OF SECTION

SECTION 26 05 34
BOXES

PART 1 - GENERAL

1.1 SUMMARY

A. Furnish labor, materials, tools, equipment, and services for Boxes, as indicated, in accordance with provisions of Contract Documents.

B. Completely coordinate with work of other trades.

1.2 REFERENCES

A. National Electrical Manufacturers Association (NEMA):

1. FB-1, Fittings, Cast metal Boxes, and Conduit Bodies for Conduit, Electrical Metallic Tubing, and Cable.

B. Society of Cable Telecommunications Engineers (SCTE).

1. 77, Specification for Underground Enclosure Integrity.

C. Underwriters Laboratories, Inc. (UL):

1. 514A, Metallic Outlet Boxes.

1.3 SUBMITTALS

A. Shop Drawings:

1. Dimensioned drawings indicating locations of all floor boxes.
2. Dimensioned drawings indicating locations of all poke-thru assemblies.

B. Product Data:

1. Describe configurations, finishes, colors, and dimensions for the following:
   a. Ingrade splice boxes.
   b. Special mounting boxes and covers.
   c. Floor boxes.
   d. Poke-thru assemblies.
   e. Provide IBC Certificates of Compliance.

PART 2 - PRODUCTS

2.1 MANUFACTURERS

A. Galvanized Outlet Boxes and Fittings:

1. Base:
   a. Hubbell/RACO.
2. Optional:
   a. Emerson Industrial – Appleton Electric.
   b. Thomas & Betts –Steel City.

B. Corrosion Resistant Boxes:

1. Crouse Hinds.
2. Robroy.

C. Wet Location Boxes/Covers:

1. Base:
   a. Hubbell.

2. Optional:
   a. Thomas & Betts.
   b. Robroy.

D. Box Supporting Brackets:

1. Base:
   a. Hubbell/RACO.
   b. Erico/Caddy.

2.2 WALL OUTLET BOXES

A. General:

1. Minimum Size.
   a. 4 inches square or octagon.
   b. Depth as required.
2. Lighting outlet boxes.
   a. Galvanized.
   b. Use extension and plaster rings as required.
   c. Verify proper depth with partition thickness.
   d. Provide with proper fittings to support and attach luminaires.
   e. Support outlet boxes for luminaires and other ceiling mounting devices in lay-in acoustic tile ceilings by bar hangers anchored to ceiling construction members which do not interfere with tile removal.
3. Switch and receptacle boxes for concealed wiring.
   a. Galvanized.
4. Pull and junction boxes.
   a. Galvanized steel, code gauge.
   b. Cover:
      1) Same material as box, screw-on type.
5. Masonry boxes for CMU installation.
   a. 3-1/2 inches deep, non-gangable with integral brackets to hold box to concrete block from front and back. Includes break-off front tabs.
   b. Hubbell RACO Block-Loc series.
6. Extension Rings.
   a. To suit conditions.
7. Hardware.
   a. Grounding screw and connectors as required by wiring method.
8. Supports.
   a. Box supporting brackets.
      1) Caddy MEB1 and SGB Series.
   b. Far side box support.
      1) Hubbell/RACO Model No. 978.
      2) Erico Model No. 766.
      3) Caddy Model No. J1A35.

B. Narrow switch boxes (for hollow metal jambs):

1. Base Product: Hubbell/RACO 426.

C. Weatherproof box and cover (mounted to building):

1. Box:

a. Corrosion resistant cast malleable iron type, with threaded hubs and neoprene gasket.
b. Design basis: Crouse-Hinds Type FS.

2. Cover for damp locations:
   a. Suitable for damp location when receptacle is in use.
   b. Gasketed and self-closing, zinc die cast, gray, lift cover.
      1) Single outlets: Hubbell RW51550.
      2) Duplex outlets: Hubbell RW51470.
      3) Duplex GFCI and USB receptacles: Hubbell RW51040.
3. Cover for wet locations:
   a. Suitable for wet location when receptacle is in use.
   b. Die-cast aluminum construction; meets extra-duty rating in UL 514D.
   c. Padlockable, gasketed NEMA 3R cover.
      1) Single outlets: Hubbell WP700E.
      2) Duplex outlets: Hubbell WP26E with duplex adapter.
      3) Duplex GFCI receptacles: Hubbell WP26E.
4. .

PART 3 - EXECUTION

3.1 COORDINATION

A. Coordinate the work with other trades and architects to avoid placement of ductwork, piping, equipment, or other potential obstructions within the dedicated equipment spaces and working clearances for electrical equipment required by NFPA 70.

B. Coordinate minimum sizes of boxes with the actual installed arrangement of conductors, clamps, support fittings, and devices, calculated according to NFPA 70.

C. Coordinate minimum sizes of pull boxes with the actual installed arrangement of connected conduits, calculated according to NFPA 70.

D. Coordinate the work with other trades and architect to provide walls suitable for installation of flush-mounted boxes where indicated.

E. Coordinate with Architect final box cover material and color requirements.

F. Coordinate with Architect and Structural Engineer the final types and locations of floor boxes and/or poke-through devices.

G. Coordinate with low voltage system engineer(s) the requirements for common floor boxes/poke-through devices provided for power and low voltage system outlets.

3.2 INSTALLATION

A. Install products in accordance with manufacturer's instructions.

B. Provide separate boxes for emergencies, legally required, optional standby, and normal power systems.

C. Unless otherwise indicated, provide separate boxes for line voltage and low voltage systems.

D. Where floor mounted power receptacle outlet and low voltage system outlet (IT, audio, video, etc.) occur at the same location, power and low voltage system devices shall be provided with a multiple gang box under a single cover plate as required.

E. Mounting Outlet Boxes for Concealed Wiring:

1. Boxes mounted adjacent to studs shall be attached directly to stud with a minimum of 4 metal screws.
   a. Provide far-side box support on all boxes.
   b. Box side support shall be secured to box with drywall screws.

2. Boxes that are not attached directly to studs shall be attached to box support bracket spanning studs.
    a. Bracket shall be attached to studs with 2 screws at each end.
    b. Attach box to bracket with 2 screws minimum.
3. For outlets mounted above, below or within counters, benches, or furniture, coordinate location and mounting heights with casework, millwork, and furniture.
    a. Adjust outlet mounting height to agree with required location for equipment served.
4. Position outlet boxes to locate luminaires as shown on reflected ceiling plans.

F. Mounting of junction boxes in existing walls:

1. Where junction boxes or device boxes are to be mounted in existing walls, sufficient drywall shall be removed to allow proper support of box by attaching directly to stud or bracket spanning 2 studs.
    a. Patch drywall and seal as required to return wall to original finish.

G. When a metallic junction box for electrical receptacles or switches is contained within a 1 or 2-hour rated fire or smoke wall of gypsum wall board construction and an opening is provided for box in surface of wall, area of opening shall not exceed 16 square inches, unless junction box is protected by approved UL listed firestop.

1. Aggregate area of such junction boxes in a rated wall not protected by an approved firestop shall not exceed 100 square inches in 100 square feet of wall area as measured from floor to structural deck or rated membrane.
2. Junction boxes with openings on opposite faces of rated walls shall have a horizontal separation of 24 inches as a minimum, regardless of box size, unless protected by an approved method.
3. Locations of studs do not have any bearing on the above requirements, nor does the use of mineral wool fire-safing alter these requirements.

H. Back to back boxes shall not be installed within the same stud cavity.

1. Where installation within the same stud cavity is required based on device layout, unfaced glass or mineral fiber sound batting or putty pads with sound reduction characteristics shall be installed to prevent sound transfer between rooms. Where putty pads are used, they shall cover all openings on box.

I. Locate junction and pull boxes as indicated and as required to facilitate installation of conductors, and to limit conduit length and/or number of bends between pulling points in accordance with Section 25 05 33.

J. Install blank wall plates on junction boxes and on outlet boxes with no devices or equipment installed or designated for future use.

K. Install all boxes plumb and level.

L. Clean interior of boxes to remove dirt, debris, plaster, and other foreign material.

M. Provide grounding and bonding in accordance with Section 26 05 26.

N. Fill unused punched-out openings in boxes with closures.

O. Use outlet boxes sized to accommodate quantity of conductors enclosed.

P. Provide pull boxes or junction boxes in conduit runs where indicated or as required to facilitate pulling of wires or making of connections.

1. Make box covers accessible.

Q. Paint inside of boxes and box cover per Section 26 05 53.

R. Identify circuit numbers on inside of box and cover plate.

1. Identification shall be post painting of boxes.

S. Coordinate floor boxes with slab depth to assure that concrete depth is adequate for specified box.

1. Set boxes level based on slab depth.
2. Maintain fire rating.

T. Identification and Labeling

1. As indicated in Section 26 05 53.

PART 4 - MEASUREMENT AND PAYMENT

4.1 MEASUREMENT

A. No separate measurement will be made for the requirements of this section and shall be included in the measurement of Section 26 05 10 – Electrical General Requirements.

4.2 PAYMENT

A. No separate payment will be made for the requirements of this section unless specifically noted for separate payment as stated herein. Full compensation for complying with the requirements of this section for furnishing all labor, materials, tools, equipment, and incidentals and for doing all the work involved in this section, shall be considered as included in contract prices paid for the various items of work involved, and no additional compensation will be allowed, therefore.

END OF SECTION

SECTION 26 09 23
LINE VOLTAGE LIGHTING CONTROL DEVICES

PART 1 - GENERAL

1.1 SUMMARY

A. Furnish labor, materials, tools, equipment, and services for Lighting Control Devices, as indicated, in accordance with provisions of Contract Documents.

B. Completely coordinate with work of other trades.

1.2 REFERENCES

A. Referenced Standards:

1. Underwriter's Laboratories (UL):
   a. UL 20 Standard for Safety for General-Use Snap Switches.
   b. UL 514D Cover Plates for Flush-Mounted Wiring Devices.
2. National Electric Manufacturers Association (NEMA):
   a. WD-1 General Color Requirements for Wiring Devices.
   b. WD-6 Wiring Devices - Dimensional Requirements.
3. US Federal Specifications:
   a. Federal Specification switches (WS-896E).
   b. Federal Specification device plates (W-P-455).

1.3 SUBMITTALS

A. Product Data:

1. Technical data on each type of device.
2. Manufacturer’s wiring and installation information.

B. Shop Drawings:

1. Occupancy sensor layout.
   a. Submit a reflected ceiling plan clearly marked by manufacturer showing occupancy sensor type, location, and proper orientation.
   b. Submit any applicable interconnection diagrams.

C. Contract Closeout Information:

1. Warranty.

D. Submittal switch locations and quantity shall be submitted to the Engineer. Quantity shall be confirmed by contractor in the field to match the existing conditions.

1.4 WARRANTY

A. Minimum five-year warranty for wall-box dimmer switches.

PART 2 - PRODUCTS

2.1 MANUFACTURERS

A. Standard Toggle Switches:

1. Base:
   a. Hubbell.
2. Optional:
   a. Cooper.

b. Leviton.
c. Pass & Seymour / Legrand.

2.2 MATERIALS

A. Toggle Switches:

1. Toggle switches shall be of the same manufacturer providing receptacles.
   a. Base:
      1) Hubbell
   b. Optional:
      1) Eaton
      2) Leviton Manufacturing.
      3) Pass & Seymour (Legrand)
2. Lighting switches:
   a. Specification grade, quiet-operating toggle-type with back and side wiring, 120-277 volts, AC only, 20 amp rated unless otherwise indicated.
      1) Listed per UL 20 and certified by UL to Federal Specification W-S-896E and visibly marked "Fed Spec W-S-896 inches”.
      2) Equip with a green grounding terminal.
3. Refer to Plan Legend for types.
4. Toggle-type switch:
   a. Single pole: Hubbell HBL1221.
   b. Three-way: Hubbell HBL1223.

PART 3 - EXECUTION

3.1 INSTALLATION

A. Locate devices as indicated on plan.

B. Set devices plumb or horizontal and extending to finished surface of wall, ceiling or floor as case may be without projecting beyond same.

C. Route neutral conductor and grounding wire to every junction box containing a line voltage switch.

D. Wall mounted switches and dimmers shall be located on latch side of door. Devices shall not be located behind or obstructed by open doors and furnishings.

3.2 CLEANING

A. Remove paint spatters and other spots, dirt, and debris from equipment.

B. Clean equipment and devices internally and externally using methods and materials recommended by manufacturer.

C. Correct improperly located devices.

PART 4 - MEASUREMENT AND PAYMENT

4.1 MEASUREMENT

A. “Electrical Light Switches” shall be measured by each switch installed.

4.2 PAYMENT

A. The contract price paid per each “Electrical Light Switches” shall include full compensation for furnishing all labor, materials, tools, equipment, and incidentals and for doing all the work involved in Line Voltage Lighting Control Devices including light switches, as shown on the plans, as specified in the Standard Specifications and these Technical Specifications.

END OF SECTION

SECTION 26 28 00
OVERCURRENT PROTECTIVE DEVICES

PART 1 - GENERAL

1.1 SUMMARY

A. Furnish labor, materials, tools, equipment, and services for Overcurrent Protective Devices, as indicated, in accordance with provisions of Contract Documents.

B. Completely coordinate with work of other trades.

1.2 REFERENCES

A. Canadian Standards Association (CSA):

1. C22.2 No. 5.1 - M91, Molded Case Circuit Breakers.

B. Federal Specifications (USGSA):

1. W-C-375B/GEN, Circuit Breakers, Molded Case; Branch Circuit and Service.

C. Institute of Electrical and Electronics Engineers, Inc. (IEEE):

1. C37.13, Low-Voltage AC Power Circuit Breakers Used in Enclosures.
2. C37.16, Standard for Preferred Ratings, Related Requirements, and Application Recommendations for Low-Voltage AC (635 V and below)and DC (3200 V and below) Power Circuit Breakers.
3. C37.17, Standard for Trip Systems for Low-Voltage (1000 V and below) AC and General Purpose (1500 V and below) DC Power Circuit Breakers.
4. C37.50, Standard for Trip Systems for Low-Voltage (1000 V and below) AC and General Purpose (1500 V and below) DC Power Circuit Breakers.

D. National Electrical Manufacturers Association (NEMA):

1. AB-1, Molded Case Circuit Breakers and Molded Case Switches.
2. SG-3, Low Voltage Power Circuit Breakers.

E. Underwriters Laboratories, Inc. (UL):

1. 489, Molded Case Circuit Breakers and Circuit Breaker Enclosures.
2. 943, Standard for Ground Fault Circuit Interrupters.
3. 1066, Standard for Low Voltage Circuit Breakers.

1.3 SUBMITTALS

A. Submit Overcurrent Protective Devices Product Data along with, or subsequent to, a complete short circuit analysis and coordination study per Section 26 05 73. Product data or shop drawings submitted prior to power system studies will be rejected.

B. Product Data:

1. Technical data on each type of device including:
   a. Outline drawings with dimensions.
   b. Ratings for voltage, amperage, and maximum interrupting ratings.
   c. Trip unit functions and adjustments
   d. Accessories.
   e. Wiring diagrams.
   f. Manufacturer shall provide hard copy time/current characteristic trip curves (and Ip and I^2t let through curves for current limiting circuit breakers) for each type of circuit breaker.
2. Submit under this section and clearly identify each overcurrent device with the associated switchgear, switchboard, panelboard, or other assembly.

C. Contract Closeout Information:

1. Operation and Maintenance Data.
   a. Include instructions for circuit breaker mounting, trip unit functions and adjustments, trouble shooting, accessories and wiring diagrams.

PART 2 - PRODUCTS

2.1 MANUFACTURERS

A. Overcurrent Protective Devices.

1. Base:
   a. Eaton.
   b. ABB / General Electric.
   c. Schneider Electric/Square D.
   d. Siemens.

B. Fuses:

1. Base:
   a. Bussmann.
   b. Mersen.
   c. Brush.
   d. Littelfuse.

C. Equipment and devices by same manufacturer.

D. Other manufacturers desiring approval comply with Section 01 61 00.

2.2 MATERIALS

A. Circuit Breakers:

1. Provide circuit breakers as required by other specifications and drawings. Provide special features as indicated including but not limited to:
   a. Drawout construction.
   b. Electrical operation.
   c. Key interlock for main-tie-main arrangements.
   d. Ground fault protection.
2. Provide lugs rated for 75 deg C wire minimum.
3. Contractor shall review one line diagrams and confirm that circuit breakers have adequate lugs to accommodate size and quantity of conductors indicated on one line diagrams, panel, and motor control schedules.
4. Lugs shall be UL Listed to accept solid (not larger than #8 AWG) and/or stranded copper and aluminum conductors.
5. Circuit breakers shall be capable of accepting bus connections.
6. Overcurrent devices shall be fully rated for available fault current unless otherwise specifically indicated.
7. Provide circuit breaker/circuit breaker and Fuse/circuit breaker combinations with series connected interrupting ratings listed by UL as recognized component combinations. Any series rated combination used shall be marked on end use equipment along with statement "Caution - Series Rated System. [_____] A Available. Identical Replacement Component Required".
8. Frame sizes 1000 A and greater shall include ground fault protection.
9. Frame sizes 1200 B and greater shall include “Arc Flash Maintenance Mode” switch and local annunciator.
10. Molded case type:

a. Constructed of glass reinforced insulating material. Current carrying components shall be completely isolated from handle and accessory mounting area.
b. Provide over center, trip free, toggle operating mechanism which shall provide quick-make, quick-break contact action. Provide common tripping of two and three pole circuit breakers.
c. Circuit breaker handle shall reside in a tripped position between ON and OFF to provide local trip indication. Circuit breaker escutcheon shall be clearly marked ON and OFF in addition to providing International I/O markings.
d. Maximum ampere rating and UL, IEC, or other certification standards with applicable voltage systems and corresponding interrupting ratings shall be clearly marked on face of circuit breaker.
e. Provide each circuit breaker with push-to-trip button, located on face of circuit breaker to mechanically operate circuit breaker tripping mechanism for maintenance and testing purposes.
f. Provide factory seal with date code on face of circuit breaker.
g. Provide circuit breakers equipped with UL Listed electrical accessories as noted on associated schedule or drawing.
h. Provide circuit breaker handle accessories with provisions for locking handle in ON and OFF position as noted on associated schedule or drawing.
i. Provide circuit breakers UL Listed for reverse connection without restrictive line and load markings and suitable for mounting in any position.
j. Provide circuit breakers UL Listed to accept field installable/removable mechanical type or compression type lugs. Provide lug body bolted in place, snap in design not acceptable.

11. Thermal-Magnetic Circuit Breakers:
    1) Used only as follows unless otherwise indicated:
        a) Main, feeder and branch circuit breakers in lighting and appliance panelboards as defined in Section 26 24 16.
        b) Main, feeder, and branch circuit breakers rated 125 A and less in distribution panel boards as defined in Section 26 24 16.
        c) Motor circuit protectors.
    2) Do not use in switchboards rated over 400 amps.
    3) Provide permanent trip unit containing individual thermal and magnetic trip elements in each pole.
    4) Thermal trip elements shall be factory preset and sealed. Circuit breakers shall be true rms sensing and thermally responsive to protect circuit conductors in a 40 deg C ambient temperature.
    5) Provide circuit breaker frame sizes above 150 A with magnetic trip adjustment located on front of circuit breaker.
    6) Provide UL Listed HACR type for two- and three-pole circuit breakers rated up to 250 A at 600 VAC.
    7) Provide Class A (5 mA) sensitivity breaker where GFCI circuit breakers are indicated.
    8)
12. Motor circuit protector (MCP) with adjustable instantaneous short circuit protection only by means of a magnetic or solid state trip element.
    a. Molded case construction.
    b. Current-limiting as indicated or required providing 200,000 AIC by means of a current-limiter attachment.
    c. See motor control center schedules for required sizes and interrupting ratings.

B. Fuses:

1. UL Class L fuses: Dual-element time-delay and current-limiting type fuses; UL Class L listed for 200,000 rms AIC symmetrical; Bussmann "Low-Peak" 600V, 601-6000A, Type KRP-C.
   a. Use for main and main feeder devices over 600A, where fuses are indicated.
2. UL Class RK-1 dual-element fuses: Dual-element time-delay and current-limiting rejection type fuses; UL Class RK-1 listed for 200,000 rms AIC symmetrical; Bussmann "Low-Peak" 0-600A, 250V Type LPN-RK and 600V Type LPS-RK.
   a. Use for main feeder devices 600A and smaller where fuses are indicated.
3. UL Class RK-1 single-element fuses: Fast-acting current-limiting rejection type fuses; UL Class RK-1 listed for 200,000 rms AIC symmetrical; Bussmann "Limitron" 1/10-600A, 250V Type KTN-RK and 600V Type KTS-RK.
   a. Use as indicated.
4. UL Class RK-5 fuses: Dual-element time-delay and current-limiting rejection type fuses; UL Class RK-5 listed for 200,000 rms AIC; Bussmann "Fusetron" 1/10-600A, 250V Type FRN-RK and 600V FRS-RK.
   a. Use for motor feeder and branch circuit devices where fuses are indicated.
5. UL Class J quick acting fuses: Rated for 600V applications where 101-200A fuses are required on load side of self-contained utility meters.
6. Elevator fuses: Type and rating as required by elevator manufacturer. Confirm requirements with elevator manufacturer prior to ordering fuses.

C. Fusible Switches:
   1. Provide panelboard type suitable for mounting in switchboards or panelboards as indicated.
      a. 200,000 AIC, 30 through 1200 A, with fuses specified above.
      b. Provide ground fault protection system with current sensor, shunt trip and control power transformer where indicated.
   2. Provide bolted pressure contact switches suitable for mounting in switchboards as indicated.
      a. 200,000 AIC, 800 through 4000 A, with fuses specified above.
      b. Electrically operated as indicated.
      c. Provide ground fault protection with current sensor, shunt trip and control power transformer where indicated.

PART 3 - EXECUTION

3.1 INSTALLATION

A. Provide overcurrent protective devices in switchboards, panelboards and motor control centers as indicated in those sections.

B. Provide individually enclosed overcurrent protective devices:
   1. Wall mounted:
      a. Finished areas: Attach to studs via Unistrut cross members or metal backing bolted or welded to studs where not otherwise shown.
      b. Masonry or concrete walls: Attach to wall via Unistrut cross members where not otherwise shown.
      c. Mounting height shall be as indicated on symbol legend or elsewhere in this specification but bottom of enclosure shall not be less than 12 inches AFF.
   2. Where floor mounted provide pad per specification 26 00 10.
   3. Arrange individually enclosed overcurrent protective devices as shown on Drawings. Electrical Room layout and individually enclosed overcurrent protective devices installation shall maximize the ability to install additional equipment in rooms. Contractor to submit coordination drawings per section 26 00 10 indicating final layout of equipment with actual individually enclosed overcurrent protective devices submitted.

C. Field Settings:

1. Perform field adjustments of protective devices as required to place equipment in final operating condition. Settings shall be in accordance with approved power system study.
   a. Refer to Section 26 05 73.
2. Provide certified calibration report for each protective device.

D. Arc Flash Labels:

1. Arc flash hazard warning label on each piece of electrical equipment.

E. Arc Flash Boundaries:

1. Identify arc flash protection boundaries in front of all electrical switchboards, switchgear, panel boards, motor control centers, UPS distribution panels, automatic transfer switches, and individual disconnects and circuit breakers. Provide outline of arc flash protection boundaries with 2 inches wide strip of red/white Seton M6356 OSHA warning tape or equivalent.

3.2 CLOSEOUT ACTIVITIES

A. Refer to Section 01 81 33 - Cyber-Security Requirements for cyber security related closeout requirements.

PART 4 - MEASUREMENT AND PAYMENT

4.1 MEASUREMENT

A. No separate measurement will be made for the requirements of this section and shall be included in the measurement of Section 26 05 10 – Electrical General Requirements.

4.2 PAYMENT

A. No separate payment will be made for the requirements of this section unless specifically noted for separate payment as stated herein. Full compensation for complying with the requirements of this section for furnishing all labor, materials, tools, equipment, and incidentals and for doing all the work involved in this section, shall be considered as included in contract prices paid for the various items of work involved, and no additional compensation will be allowed therefore.

END OF SECTION

SECTION 26 28 16
ENCLOSED SAFETY SWITCHES

PART 1 - GENERAL

1.1 SUMMARY

A. Furnish labor, materials, tools, equipment, and services for Enclosed Safety Switches, as indicated, in accordance with provisions of Contract Documents.

B. Completely coordinate with work of other trades.

1.2 SUBMITTALS

A. Product Data:

1. Technical data on each type of disconnect switch.
    a. Include dimensioned elevations, sections, weights, features, performance, electrical characteristics, ratings, accessories, and finishes.
        a) Enclosure types and details for types other than NEMA 250, Type 1.
        b) Current and voltage ratings.
        c) Short-circuit current ratings.

PART 2 - PRODUCTS

2.1 MANUFACTURERS

A. Enclosed Safety Switches:

1. Eaton.
2. ABB/General Electric.
3. Schneider Electric/Square D.
4. Siemens.

2.2 SAFETY SWITCHES

A. Safety Switches:

1. Fusible and non-fusible type, NEMA Type HD Heavy Duty construction, unless otherwise indicated.
2. Enclosure: NEMA 1 unless otherwise indicated.
3. Provide weatherproof disconnect switches as required by Section 26 00 10.
4. Switch blades are fully visible in OFF position with door open.
5. Contact operation quick-make and quick-break.
6. Switches for motor circuits to be horsepower rated.
7. Switches for motor circuits controlled by Variable Frequency Drives (VFD) shall include one N.O. and one N.C. contact which operate with the initial movements of the switch and prior to the opening of the main switch.
8. Provide padlocking provisions, with a minimum capacity of 1 padlock, in OFF position.
9. Finish: Baked enamel over rust-inhibiting primer.
10. Fuses for fusible switches: See Section 26 28 00.
11. Switches shall have interlock with cover in closed position.

PART 3 - EXECUTION

3.1 INSTALLATION

A. Coordinate layout and installation of switches, and components with equipment served and adjacent surfaces. Maintain required workspace clearances and required clearances for equipment access doors and panels.

B. Arrange enclosed safety switches as shown on Drawings. Electrical Room layout and enclosed safety switches installation should maximize the ability to install additional equipment in rooms. Contractor to submit coordination drawings per section 26 00 10 indicating final layout of equipment with actual enclosed safety switches submitted.

C. Install as indicated and in accordance with manufacturer's instructions and recommendations.

D. Switches for motor circuits controlled by VFD's shall be electrically interlocked to the controlling VFD via contacts provided in switch.

PART 4 - MEASUREMENT AND PAYMENT

4.1 MEASUREMENT

A. No separate measurement will be made for the requirements of this section and shall be included in the measurement of Section 26 05 10 – Electrical General Requirements.

4.2 PAYMENT

A. No separate payment will be made for the requirements of this section unless specifically noted for separate payment as stated herein. Full compensation for complying with the requirements of this section for furnishing all labor, materials, tools, equipment, and incidentals and for doing all the work involved in this section, shall be considered as included in contract prices paid for the various items of work involved, and no additional compensation will be allowed, therefore.

END OF SECTION

Pyramid Building Structural Repairs - PWG470.0-26

Spec Section	Item No.	Item	Estimated Qty	Unit	ABC General Contractor Unit Price	ABC General Contractor Extended Total
		BASE CONSTRUCTION				
		STRUCTURES				
05 12 00	1.	STRUCTURAL STEEL (8" x 8" x 3/8" HSS COLUMNS)	4	EA	$ 8,163.85	$ 32,655.40
05 12 00	2.	EXISTING COLUMN PLUMB & REPAIR	5	EA	$ 3,669.46	$ 18,347.30
05 12 00	3.	EXISTING COLUMN BASE RESTRAINT	15	EA	$ 2,314.30	$ 34,714.50
06 11 10	4.	WOOD BLOCKING (4" x 4", DF#2)	1,760	LF	$ 22.16	$ 39,001.60
04 22 00	5.	CMU WALL REPAIR	150	LF	$ 620.90	$ 93,135.00
06 11 10	6.	ROOF PLYWOOD REPLACEMENT	1	ALLOW	$ 4.10	$ 4.10
06 11 10	7.	WALL/ROOF ANCHORAGE HARDWARES	1	LS	$ 36,002.24	$ 36,002.24
		ARCHITECTURAL				
07 31 13	8.	ROOF REPLACEMENT (LIMITED)	16,000	SF	$ 12.42	$ 198,720.00
05 50 00	9.	PREFABRICATED RAMP AND STAIRS	1	EA	$ 39,074.89	$ 39,074.89
08 11 13	10.	HOLLOW METAL DOORS AND FRAMES	7	EA	$ 14,903.74	$ 104,326.18
07 84 00	11.	FIRESTOPPING	1	LS	$ 23,539.93	$ 23,539.93
05 50 00	12.	METAL RAILINGS	4	EA	$ 12,220.68	$ 48,882.72
10 14 00	13.	SIGNAGE	18	EA	$ 292.33	$ 5,261.94
10 44 00	14.	FIRE EXTINGUISHERS	17	EA	$ 358.39	$ 6,092.63
08 33 30	15.	COILING FIRE AND EGRESS ASSEMBLY	2	EA	$ 37,411.18	$ 74,822.36
		ELECTRICAL				
26 00 10	16.	ELECTRICAL RELOCATION (EXIT SIGNS)	1	LS	$ 3,622.38	$ 3,622.38
26 09 23	17.	ELECTRICAL LIGHT SWITCHES	4	EA	$ 1,703.18	$ 6,812.72
26 00 10	18.	ELECTRICAL INSTALLATION OF OVERHEAD COILING FIRE DOORS	2	LS	$ 9,313.50	$ 18,627.00
26 00 10	19.	ELECTRICAL RELOCATION (FIRE ALARM PANEL)	1	LS	$ 2,401.07	$ 2,401.07
26 00 10	20.	ELECTRICAL RELOCATION (LIGHTING AND LIGHTING CONTROL PANEL)	1	LS	$ 44,770.17	$ 44,770.17
		DEMOLITION				
02 41 00	21.	REMOVE EXISTING TEMPORARY STRUCTURES WITH HAULING	1	LS	$ 36,057.63	$ 36,057.63
02 41 00	22.	SPRINKLER REMOVAL	600	SF	$ 21.94	$ 13,164.00
02 41 00	23.	REMOVE EXISTING OVERHEAD COILING FIRE DOOR	2	LS	$ 1,730.88	$ 3,461.76
		(A) Subtotal Base Construction Cost (# 1 to 23)				**$ 883,497.52**
		MOBILIZATION				
01 00 00	24.	Mobilization	1	LS	$ 10,000.00	$ 10,000.00
01 00 00	25.	Demobilization	1	LS	$ 5,000.00	$ 5,000.00
		(B) Subtotal Mobilization/Demobilization (# 24 to 25)				**$ 15,000.00**
		Total Construction Cost A + B (Basis for Award)				**$ 898,497.52**

Total must include insurance, bid bond, payment and performance bonds. MTS will not pay additional costs for these.

Bidder Name: ABC General Contractor Inc

Third Party Contractors

Any time there is a change to Third Party Contractor resubmit this attachment. Any change to these forms after bid submittal must be made in accordance with Public Contract Code sections 4100 et seq., as applicable, and as permitted by MTS. In compliance with the Subletting and Subcontracting Fair Practices Act of the Public Contract Code of the State of California, sections 4100 et seq., each bidder shall specify each subcontractor who will perform work or labor or render service to the Contractor in or about the construction of the work in an amount in excess of one-half of one percent (1/2%) of the Grand Total Basis of Award. Any time there is a change to a Subcontractor, Contractor shall resubmit this attachment. Any change to these forms after bid submittal must be made in accordance with Public Contract Code sections 4100 et seq., as applicable, and as permitted by MTS.

Company Name	Type of Small Business or DBE	% of Work	DIR Number	Dollar Value	Description of Work	Point of Contact Name	Email	Phone Number	Street Address, City, State, Zip
BTS Equipment Unlimited Inc	SB	4.97%	1000023875	$44,616.00	Demo	Ronnie Swaim	RSwaimjr@btsunlimited.com	619.324.7065	13465 Camino Canada, Ste 106-501 El Cajon, CA 92021
Premier Roofing CA Inc	SB	15.97%	1000005935	$143,500.00	Roofing	Jason Arnolde	jasona@premierroofingca.com	619.667.4565	9134 Olive Drive Spring Valley, CA 91977
Electric Contracting & Design Solutions Inc DBA Swift Electric	N/A	6.13%	1001080469	$55,054.00	Electrical	Mason Brown	mb_swiftelectric@ecdsinc.com	619.820.2113	9782 Los Coches Road Lakeside, CA 92040
Titan Steel	N/A	10.71%	1001017266	$96,205.00	Structure Steel	Chris Livingston	chris@titansteelfabricatorsinc.com	619.449.1271	9302 Bond Ave El Cajon, CA 92021
Total		**37.78%**		**$339,375.00**					

If there are no subcontractors, Bidders should mark as Not Applicable and submit this form with the bid.

Metropolitan Transit System

Agenda Item No. 14

MEETING OF THE SAN DIEGO METROPOLITAN TRANSIT SYSTEM
BOARD OF DIRECTORS

July 30, 2026

SUBJECT:

Imperial Avenue Division Richard A. Murphy (IAD RAM) Building Roofing Replacement – Contract Award

RECOMMENDATION:

That the San Diego Metropolitan Transit System (MTS) Board of Directors authorize the Chief Executive Officer (CEO) to execute MTS Doc. No. PWB466.0-26 (in substantially the same format as Attachment B), with Chambers Inc. dba Roof Construction (Chambers), in the amount of $350,600.00 for the construction of the IAD RAM building roofing replacement.

Budget Impact

The total cost of this contract is estimated to be $350,600.00. The project will be funded by Capital Improvement Program (CIP) account 3006126301 – IAD Roof Replacement.

DISCUSSION:

The existing roofing at the IAD RAM Building (located at 100 16th Street, San Diego, CA) is beyond its useful life, and thus, needs to be replaced. This project will generally consist of the removal of approximately 32,100 square feet of the existing bitumen roofing system, replacing it with Thermoplastic-Polyolefin (TPO) and replacing existing metal flashing. This work will improve the current condition of the building and help bring it to a state of good repair, mitigating potential risks and costs to MTS in the future (Attachment B).

Today's proposed action would issue a contract to Chambers to provide all labor, materials, and equipment necessary to replace the roofing at the IAD RAM roof building.

On May 12, 2026, MTS issued an Invitation for Bids (IFB) seeking a contractor to remove the existing IAD RAM building roofing and replace it with a TPO system.

Twelve (12) bids were received by the due date of June 24, 2026, from the following firms:

Company Name	Firm Certifications	Bid Amount
MTS – Independent Cost Estimate (ICE)		***$948,538.54***
Chambers Inc. dba Roof Construction	Small Business Public Works (SB-PW)	$350,600.00
ACCI Roofing Services	SB (SB(Micro)), (SB-PW)	$425,500.00
Commercial & Industrial Roofing	N/A	$429,163.00
Bishop Inc.	N/A	$525,481.00
Danny Letner, Inc. dba Letner Roofing Co.	N/A	$552,000.00
A Good Roofer Inc.	SB, SB-PW	$557,628.00
AOS Inc. dba Superior Roofing	SB, SB-PW	$570,000.00
Durable Cool Roofs, Inc.	SB, Women Owned Small Business (WOSB)	$580,226.00
A. Preman Roofing, Inc.	N/A	$595,331.00
Jax JJC Inc.	N/A	$813,760.96
Best Contracting Services, Inc.	N/A	$855,785.00
Regan Roofing, Inc.*	SB	$10,262,009,750.67

**MTS believes the vendor submitted a bid with errors resulting in an unrealistic proposed amount for the construction services.*

Based on the bids received, and in comparison to MTS's ICE of $948,538.54, staff determined Chambers to be the lowest responsive and responsible bidder, and the bid to be fair and reasonable (Attachment C).

This work order is not subject to the Project Labor Agreement (PLA) approved under Board Policy No. 66 because the MTS ICE was under $1,000,000.00.

Work is expected to be completed within one hundred and twenty (120) calendar days after the issuance of the notice to proceed.

Chambers will not be utilizing any subcontractors for the work.

Therefore, staff recommend that the MTS Board of Directors authorize the CEO to execute MTS Doc. No. PWB466.0-26 (in substantially the same format as Attachment B), with Chambers, in the amount of $350,600.00 for the construction of the IAD RAM building roofing replacement.

/s/ Sharon Cooney
Sharon Cooney
Chief Executive Officer

Key Staff Contact: Julia Tuer, 619.557.4515, Julia.Tuer@sdmts.com

Attachments: A. Draft Agreement MTS Doc No.PWB466.0-26
B. Scope of Work and Technical Specifications
C. Costs

Metropolitan Transit System

STANDARD CONSTRUCTION AGREEMENT

FOR

MTS DOC. NO. PWB466.0-26

IMPERIAL AVENUE DIVISION RAM BUILDING ROOF REPLACEMENT

THIS AGREEMENT is entered into this _____ day of _____ 2026, in the State of California by and between San Diego Metropolitan Transit System ("MTS"), a California public agency, and the following, hereinafter referred to as "Contractor":

Name: Chambers Inc., dba Roof Construction Address: 1563 Sterling Court
Escondido, CA 92029

Form of Business: Corporation
(Corporation, Partnership, Sole Proprietor, etc.)

Email: sunny@roofconstruction.com

Telephone: (619) 937-1010

Authorized person to sign contracts Ronald Chambers (Name) President (Title)

The specified Contract Documents are part of this Agreement. The Contractor agrees to furnish to MTS services and materials, as follows:
Contractor shall furnish all necessary management, supervision, labor, materials, tools, supplies, equipment, plant, services, engineering, testing and/or any other act or thing required to diligently and fully perform and complete the Project as specified in accordance with the Standard Agreement and General Conditions (Exhibit A), Scope of Work, Special Conditions and Attachments (Exhibit B), Bid Price Form (Exhibit C) and Forms (Exhibit D).

SCOPE OF WORK.

Contractor, for and in consideration of the payment to be made to Contractor as hereinafter provided, shall furnish all plant, labor, technical and professional services, supervision, materials and equipment, other than such materials and equipment as may be specified to be furnished by MTS, and perform all operations necessary to complete the Work in strict conformance with the Contract Documents (defined below) for the following public work of improvement:

IMPERIAL AVENUE DIVISION RAM BUILDING ROOF REPLACEMENT

Contractor is an independent contractor and not an agent of MTS. The Contractor and its surety shall be liable to MTS for any damages arising as a result of the Contractor's failure to comply with this obligation.

DRAFT

CONTRACT TIME.

Time is of the essence in the performance of the Work. The Work shall be commenced by the date stated in MTS's Notice to Proceed. The Contractor shall complete all Work required by the Contract Documents within **120 calendar days** from the commencement date stated in the Notice to Proceed. By its signature hereunder, Contractor agrees the Contract Time is adequate and reasonable to complete the Work.

CONTRACT PRICE.

MTS shall pay the Contractor as full compensation for the performance of the Contract, subject to any additions or deductions as provided in the Contract Documents, and including all applicable taxes and costs, the sum of **$350,600.00**. Payment shall be made as set forth in the General Conditions.

PROVISIONS REQUIRED BY LAW.

Each and every provision of law required to be included in these Contract Documents shall be deemed to be included in these Contract Documents. The Contractor shall comply with all requirements of the California Labor Code applicable to this Project.

INDEMNIFICATION.

Contractor shall provide indemnification as set forth in the General Conditions.

PREVAILING WAGES.

Contractor shall be required to pay the prevailing rate of wages in accordance with the Labor Code which such rates shall be made available at MTS's Administrative Office or may be obtained online at http://www.dir.ca.gov and which must be posted at the job site.

PROJECT LABOR AGREEMENT.

Contractor shall comply with MTS's Project Labor Agreement in the performance of the Work.

SAN DIEGO METROPOLITAN TRANSIT SYSTEM	CHAMBERS INC., DBA ROOF CONSTRUCTION
By: _____ Sharon Cooney, Chief Executive Officer Approved as to form: By: _____ Karen Landers, General Counsel	By _____ Title: _____

DRAFT

SCOPE OF WORK/MINIMUM TECHNICAL SPECIFICATIONS

ATTACHMENT 1

SECTION 1-1 GENERAL

This project is for the Imperial Avenue Division Richard A. Murphy (IAD RAM) building roofing replacement. The improvements will consist removal of approximately 32,100 SF of existing bitumen roofing system and replacing with Thermoplastic-Polyolefin (TPO) and replacing existing sheet metal flashing.

All work is to occur within the IAD RAM Building located at 100 16th Street, San Diego 92101.

SECTION 1-2 STAGING

Contractor is to keep and store all materials and equipment within the work area as possible. Any further staging would have to be coordinated with the MTS Project Manager. There may be some available space adjacent to the work area. All property stored onsite is the responsibility of the contractor and MTS shall not be held liable for any and all equipment, material, tools, etc.

SECTION 1-3 TEMP FACILITIES

The contractor may use MTS' restroom facilities. Contractor is responsible for temp power and water if there is not a close or local source.

SECTION 1-4 SAFETY AND ACCESS

Diligent caution must be taken during the undertaking of this work. All work will occur within the building and on the roof. MTS will coordinate parking spots for the contractor. Only vehicles necessary for the performance of the work shall be parked within the lot adjacent to the work. Roof access can consist of using the roof door or attaching an exterior ladder of scaffolding as necessary. Contractor is responsible for meeting all OSHA fall protection requirements in relation to the work. All other parking can be offsite. Staging areas are limited to the designated areas indicated in the exhibit provided in the attachments. The designated areas shall remain clear at the end of every work day. All material storage shall be placed on the roof. Any other additional work areas shall be coordinated in advance with MTS.

SECTION 1-5 WASTE

The contractor is responsible for legally disposing of any and all waste in relation to the work. The contractor shall be responsible for properly disposing all removed materials and old equipment as specified herein. The contractor shall not use any onsite receptacles to dispose of material generated during the performance of this contract. Due to nightly operations, waste bins cannot be kept overnight. The contractor shall provide a method for storing and hauling waste that should be demobilized off site at the end of every work day. Contractor is responsible for general cleanup at the end of each work day.

SECTION 1-6 SCHEDULE AND SEQUENCING

All work shall be completed within one hundred twenty (120) calendar days from issuance of Notice to Proceed. It is assumed there will be some lead time for some items, which is included in the duration. The work shall commence once all material is available and the work can proceed without stoppages. Contractor is to provide a schedule for the work.

SECTION 1-7 ROOFING SCOPE OF WORK

A. Replace Roofing System

i. Provide all labor, tools, equipment, and materials to remove and replace the existing roofing system with new TPO at the IAD RAM Building. Refer to Sheet 18 for the existing RAM Building roof plans in the as-builts and field dimensions for existing curbs provided in the attachments. The work will include the following tasks:
   a) Removal of approximately 32,100 SF of existing bitumen roofing system and replacing with Thermoplastic-Polyolefin (TPO) and replacing existing sheet metal flashing.
   b) TPO roof shall accommodate a total of 48 each existing roof penetrations, 21 each existing roof drains
   c) TPO roof shall accommodate a total of 49 each existing HVAC curbs and 17 each skylights.

ii. Remove existing bitumen asphalt roofing system to expose substrate. This includes removal and disposal of all gravel, flashing, and counter flashing as is necessary to complete waterproofing.

iii. Substrate conditions to be inspected with the Contractor and MTS and may be replaced at the direction of MTS at an additional cost.

iv. Protect in place existing roof vents pipes, gas line, roof access hatch, skylights, roof curbing for HVAC utilities, and etc.
   a) Existing penetrations shall be encapsulated by using either a preformed TPO boot or a pitch pocket. This method of encapsulation should be used whether the penetration is vertical or horizontal.
   b) Remove and dispose all existing HVAC and skylight base flashing to expose wooden curbs and replace with edge encapsulated TPO curb flashing.

v. Scuppers contained in the TPO roof system require hand welded seams. Special attention should be given to performing inspection in these areas due to the space constraints to assure the membrane is fully adhered.

vi. TPO roofing system shall be constructed to resist wind uplift.

vii. TPO Sheets shall meet ASTM D6878/D6878M, internally fabric- or scrim-reinforced with 60 mils nominal thickness with exposed face color in white.
   a) Manufacturers: Subject to compliance with requirements, provide products by one of the following, or approved equal:
      Carlisle SynTec Incorporated.
      Flex Membrane International Corp.
      GAF.
      Johns Manville; a Berkshire Hathaway company.

viii. Provide preformed roof insulation boards manufactured or approved by TPO roof membrane manufacturer. Roof insulation boards must be a minimum of R10 thickness

and fire rated. Polyisocyanurate Board insulation must comply with ASTM C1289, Class 1, Grade 2, felt or glass-fiber mat facer on both major surfaces.

ix. Provide roof insulation accessories recommended by insulation manufacturer for intended use and compatibility with other roofing system components.

x. Roofing insulation Board and TPO membrane to be mechanically fastened per manufacture specifications.

xi. Provide manufacturer's recommended adhesive formulated to attach TPO to walls and base flashing.
   a) JM Low-VOV Bonding Adhesive applied by roller or brush.
   b) JM All Season Sprayable Bonding Adhesive. Contractor to provide 20-year quality assurance warranty. Contractor to schedule final inspection with manufacturer upon completion to obtain 20-year NDL (No Dollar Limit) warranty.

xii. Special Warranty: Manufacturer agrees to repair or replace components of roofing system that fail in materials or workmanship within specified warranty period.
   a) Special warranty includes roof membrane, base flashings, roof insulation, fasteners, cover boards, and other components of roofing system.
   b) Provide TPO walk pads for access to rooftop equipment.
   c) TPO roofing system shall be extended at a minimum of 8" vertically on the parapet wall, or as recommended by the manufacturer. TPO termination shall consist of a termination bar and counterflashing assembly.

B. Other Work

i. Provide all labor, tools, equipment, and materials for the following:
   a) Upon roof removal, Contractor shall investigate existing roof pipe drain leak to assess potential repairs. MTS may request a proposal to repair at their discretion Investigate and repair one roof drain at the northern edge of the building.
   b) Replace one missing drain grate. Refer to photos of existing roof provided in the attachments.
   c) Replace all existing lumber pipe supports with Unistrut and rubber Dura-Bloks or approved equal. .

C. References

i. Roofing Terminology: Refer to the following publications for definitions of roofing work related terms in this Section:
   a) ASTM D 1079 "Standard Terminology Relating to Roofing and Waterproofing."
   b) Glossary of NRCA's "The NRCA Roofing and Waterproofing Manual."
   c) Roof Consultants Institute "Glossary of Building Envelope Terms."
   d) Sheet Metal Terminology and Techniques: SMACNA "Architectural Sheet Metal Manual."

D. Design Criteria

i. General: Installed roofing membrane system shall remain watertight; and resist specified wind uplift pressures, thermally induced movement, and exposure to weather without failure.

ii. Material Compatibility: Roofing materials shall be compatible with one another under conditions of service and application required, as demonstrated by roofing system manufacturer based on testing and field experience.

iii. Installer shall comply with current code requirements based on authority having jurisdiction.
iv. Wind Uplift Performance: Roofing system shall be identical to systems that have been successfully tested by a qualified testing and inspecting agency to resist wind uplift pressure calculated in accordance with ASCE 7.
v. Fire-Test-Response Characteristics: Provide roofing materials with the fire-test- response characteristics indicated as determined by testing identical products per test method below by UL, FMG, or another testing and inspecting agency acceptable to authorities having jurisdiction. Materials shall be identified with appropriate markings of applicable testing and inspecting agency.
    e) Exterior Fire-Test Exposure: Class A; ASTM E 108, for application and roof slopes indicated.

E. Insurance

If the contractor maintains broader coverage and/or higher limits than the minimums shown in Section 3.32 above, the Entity requires and shall be entitled to the broader coverage and/or the higher limits maintained by the contractor. Any available insurance proceeds in excess of the specified minimum limits of insurance and coverage shall be available to the Entity.

SECTION 1-8 SUBMITTALS

Contractor is to provide the following submittals including, but not limited to:

i. Roofing
ii. TPO Roofing Membrane(s)
iii. Roof Fasteners
iv. Roof Membrane Plates
v. Membrane Termination System
vi. TPO Joint and Corner Patches
vii. TPO Walkpads
viii. Insulation
ix. Cover Board
x. Roofing Materials Certificates of Compliance
xi. Roof Application Compounds, including MSDS
xii. Preventative Maintenance Guidelines
xiii. TPO Roof Penetration and Termination Shop Drawings
xiv. Counterflashing Product Data
xv. Dura-Block Pipe Supports and Unistrut or approved equal
xvi. Construction Schedule

Attachment(s):

1. ATT 1.1 Bus Maintenance Facility Imperial Avenue Division As-Builts
2. ATT 1.2 IAD Roof Curb Exhibit
3. ATT 1.3 Photos of Existing Roof
4. ATT 1.4 Roof Staging Exhibit

ROOF CURB EXHIBIT N.T.S

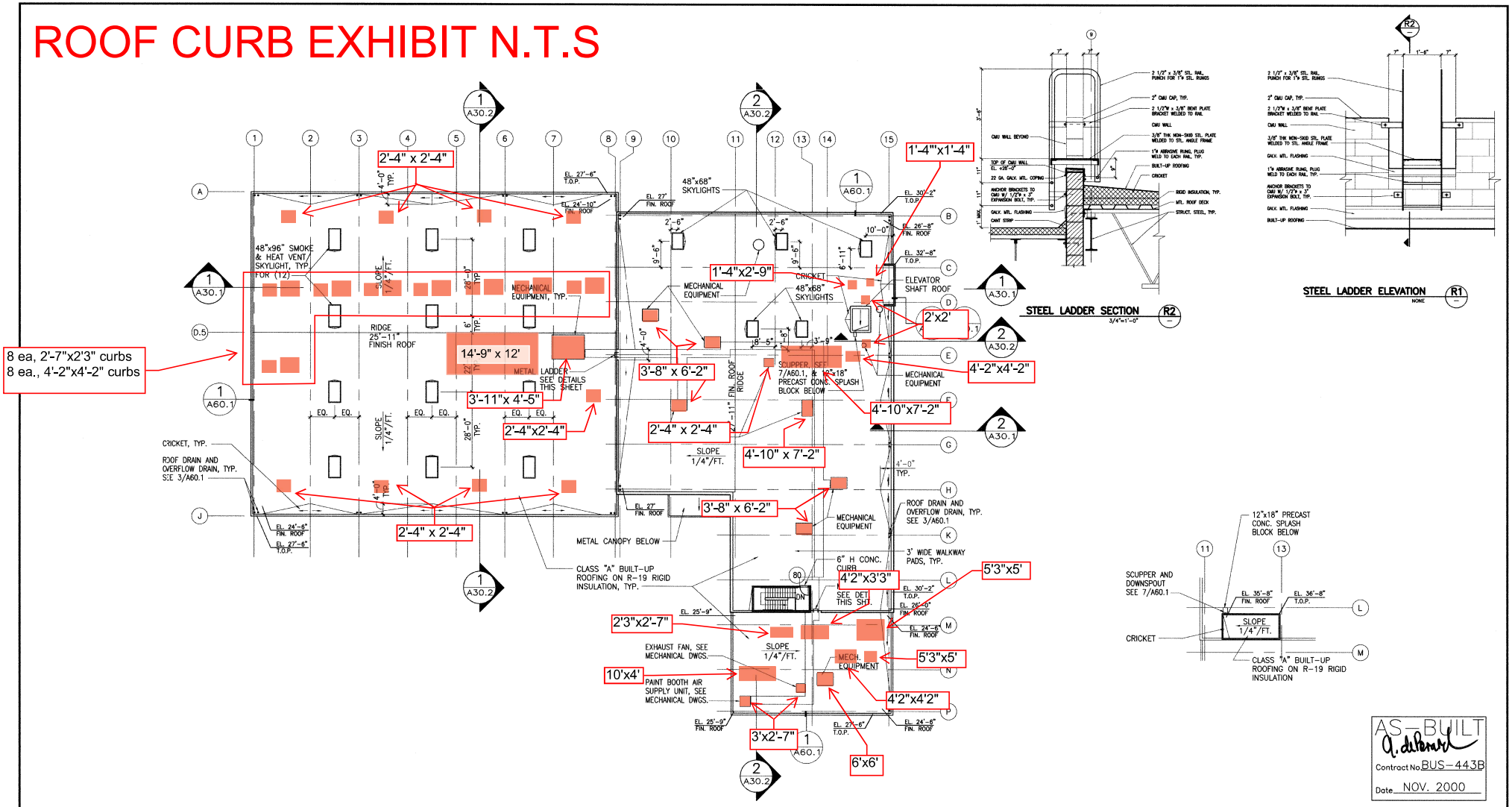

ROOF PLAN 1/16"=1'-0" 1/A12.1

UPPER ROOF PLAN 1/16"=1'-0" 2/A12.1

AS-BUILT
Contract No. BUS-443B
Date NOV. 2000

CONSTRUCTION CHANGE TABLE		
CHANGE	DATE	SHEET NUMBERS REVISED OR ADDED THIS CHANGE
1	6/28/99	ADDENDUM NO. 1

STV Incorporated
ENGINEERS/ARCHITECTS/PLANNERS/CONSTRUCTION MANAGERS
1055 WILSHIRE BOULEVARD, SUITE 1455
LOS ANGELES, CALIFORNIA 90017-2469

REGISTERED ARCHITECT C-24485 STATE OF CALIFORNIA

DESIGNED BY	K. Kim	12/17/98
DRAWN BY	S. Escobar	12/17/98
CHECKED BY	M. Fernandes	12/17/98
MTDB PRJ. ENG.		

MTDB
Metropolitan Transit Development Board
1255 Imperial Avenue, Suite 1000, San Diego, Ca. 92101-7490 (619)231-1466

IMPERIAL AVENUE DIVISION
BUS MAINTENANCE FACILITY

ROOF PLANS

SCALE	1/16"=1'-0"
MTDB CONTRACT NO.	BUS-443B
DRAWING NO.	A12.1
SHEET NO.	18

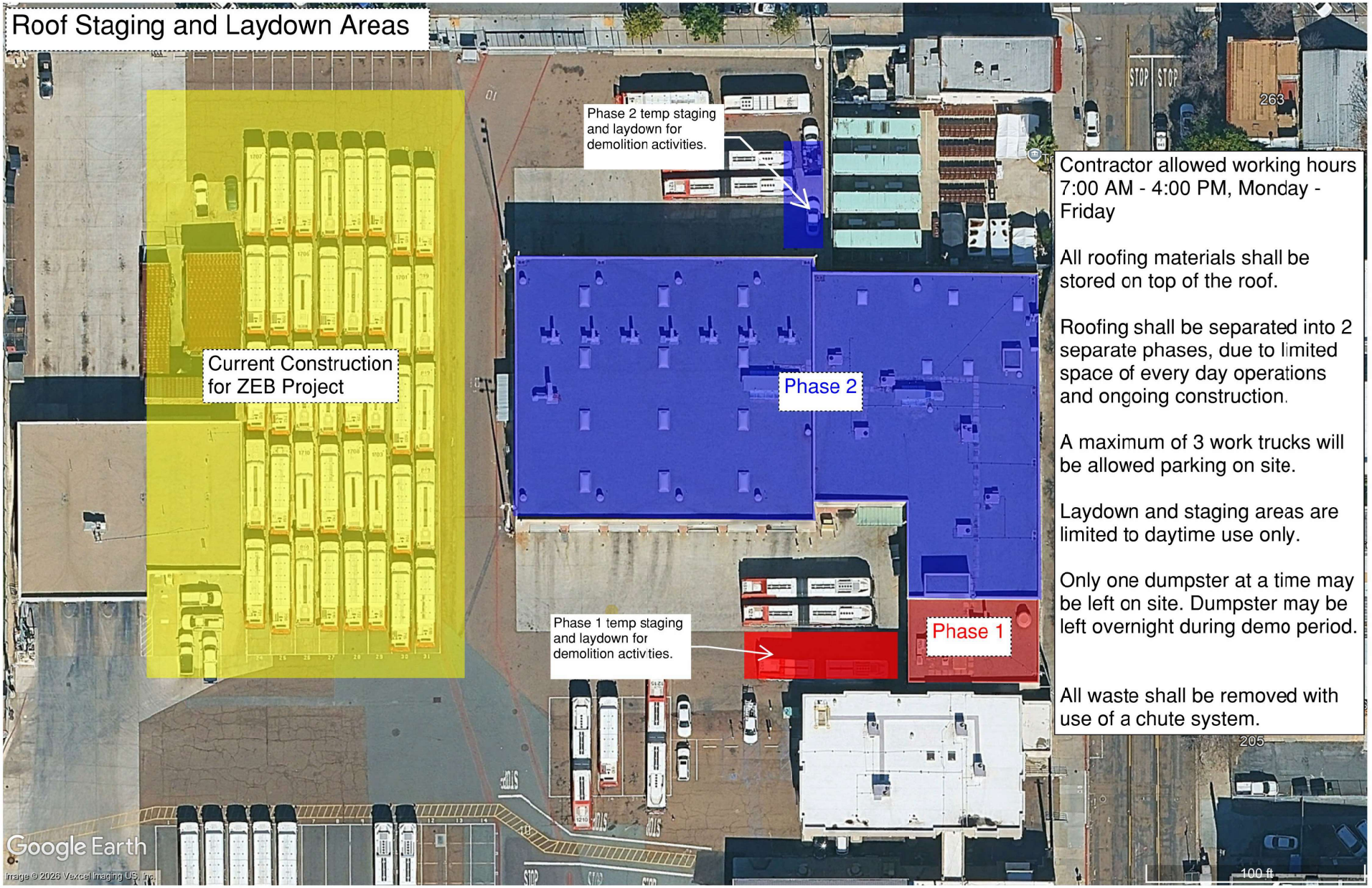
Roof Staging and Laydown Areas
Phase 2 temp staging and laydown for demolition activities.
Current Construction for ZEB Project
Phase 2
Phase 1 temp staging and laydown for demolition activities.
Phase 1
Contractor allowed working hours 7:00 AM - 4:00 PM, Monday - Friday
All roofing materials shall be stored on top of the roof.
Roofing shall be separated into 2 separate phases, due to limited space of every day operations and ongoing construction.
A maximum of 3 work trucks will be allowed parking on site.
Laydown and staging areas are limited to daytime use only.
Only one dumpster at a time may be left on site. Dumpster may be left overnight during demo period.
All waste shall be removed with use of a chute system.
Google Earth
Image © 2026 Vexcel Imaging US, Inc.
100 ft

EF-6

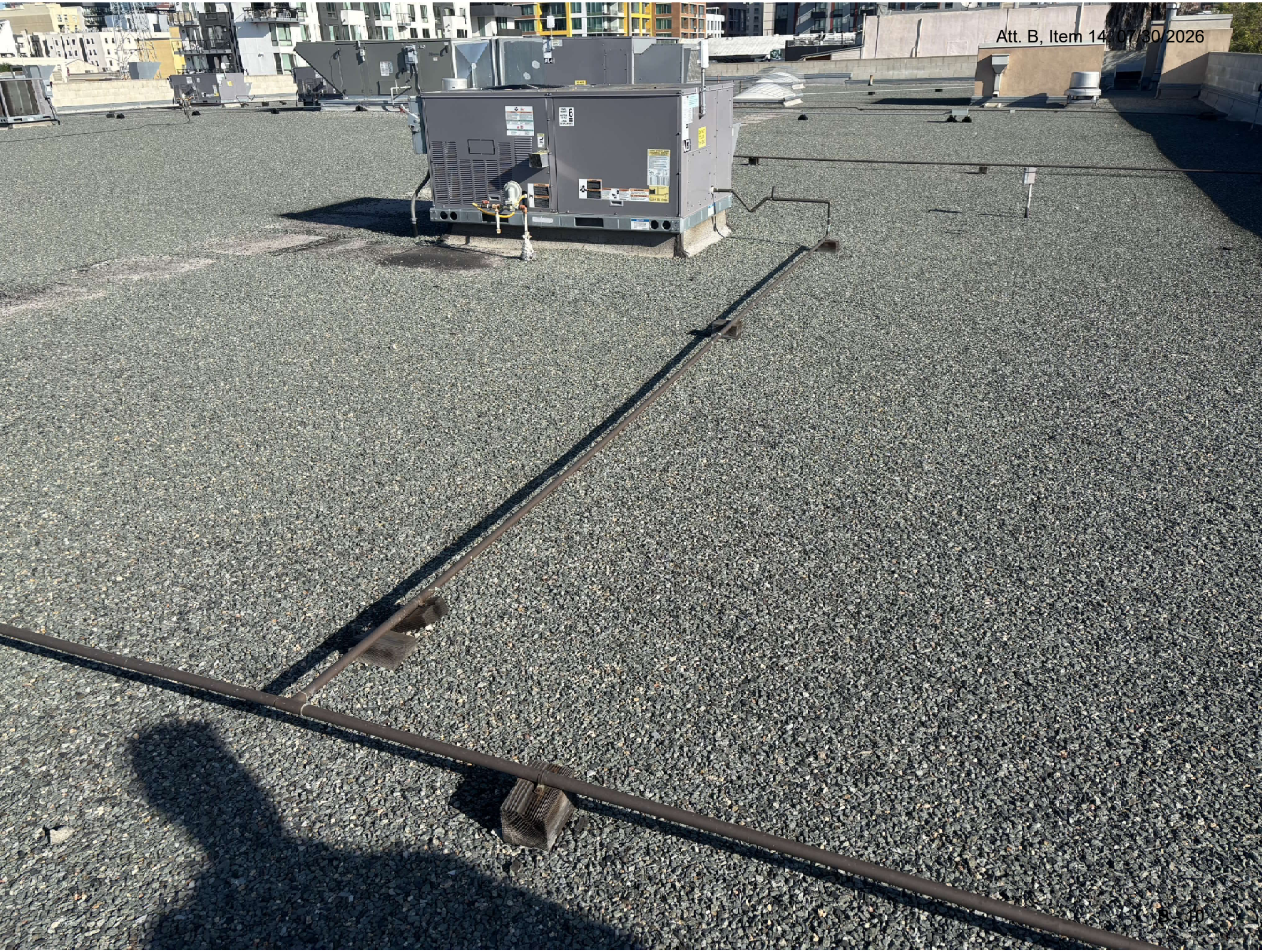

FORTUNE
FAVORS
GREAT TASTE

FORTUNE
FAVORS
GREAT TASTE

SAN DIEGO

METROPOLITAN TRANSIT DEVELOPMENT BOARD

AS-BUILTS

BUS MAINTENANCE FACILITY
IMPERIAL AVENUE DIVISION
CONTRACT BUS-443B

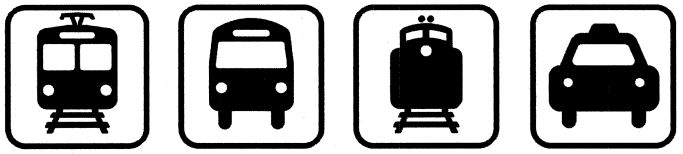

EARTH TECH
9675 BUSINESS PARK AVENUE SUITE 110, SAN DIEGO, CA. 92131
TEL: (619) 536-5610

JANUARY 2001

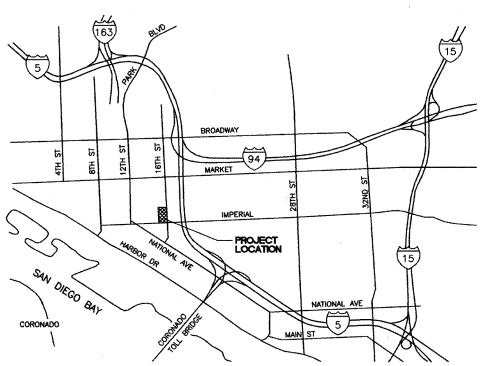

LOCATION MAP

N.T.S.

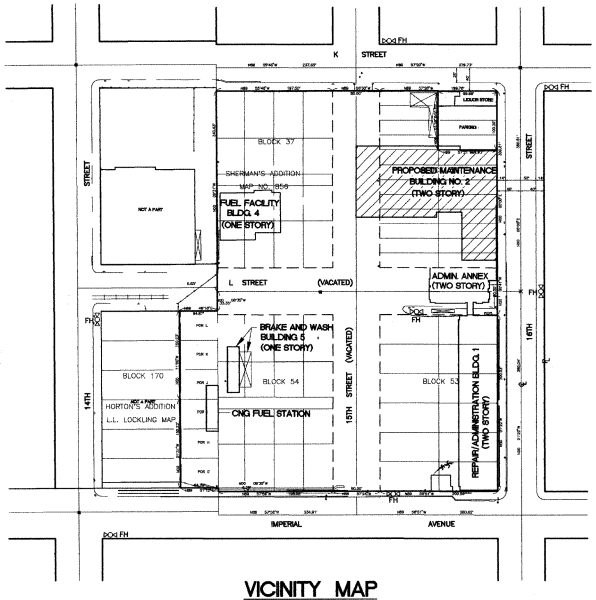

VICINITY MAP

N.T.S.

PROJECT DIRECTORY

TRANSIT AGENCY

OWNER:
PROJECT MANAGER
METROPOLITAN TRANSIT CENTER BOARD
1255 IMPERIAL AVENUE, SUITE 1000
SAN DIEGO, CA 92101-7490
(619) 557-4516

OPERATOR:
MAINTENANCE MANAGER
SAN DIEGO TRANSIT CORPORATION (SDTC)
100 16TH STREET
SAN DIEGO, CA 92101
(619) 238-0100 EXT 500

CONSULTANTS

ARCHITECTURAL WORK:
PROJECT ARCHITECT
STV INCORPORATED
1055 WILSHIRE BOULEVARD, SUITE 1455
LOS ANGELES, CA 90017-2499
(213) 482-9475

STRUCTURAL WORK:
PROJECT ENGINEER
SIMON WONG ENGINEERING
9968 HIBERT STREET, SUITE 202
SAN DIEGO, CA 92131
(619) 566-3113

ELECTRICAL WORK:
PROJECT ENGINEER
KANRAD ENGINEERING, INC.
9605 SCRANTON ROAD, SUITE 101
SAN DIEGO, CA 92121-2723
(619) 626-2700

MECHANICAL AND PLUMBING WORK:
PROJECT ENGINEER
TMAD ENGINEERS, INC.
9845 ERMA ROAD, SUITE 200
SAN DIEGO, CA 92131
(619) 271-9808

SITE/CIVIL/SURVEY WORK
PROJECT ENGINEER
EARTH TECH INC.
9675 BUSINESS PARK AVENUE
SAN DIEGO, CA 92131
(619) 536-5610

GEOTECHNICAL WORK/HAZMAT
PROJECT ENGINEER
EARTH TECH INC.
9675 BUSINESS PARK AVENUE
SAN DIEGO, CA 92131
(619) 536-5610

CITY AGENCIES/PLAN CHECKS

CITY OF SAN DIEGO WATER UTILITIES
PROJECT COORDINATOR
600 B STREET, SUITE 800
MS 908A
SAN DIEGO, CA 92101-4502
(619) 533-5150

CENTRE CITY DEVELOPMENT CORPORATION
225 BROADWAY, SUITE 1100, MS #51D
SAN DIEGO, CA 92101
(619) 533-7117

CITY OF SAN DIEGO FIRE DEPARTMENT
SAN DIEGO FIRE DEPARTMENT
1010 SECOND AVENUE
SAN DIEGO, CA 92101
(619) 533-4449

UTILITIES

SAN DIEGO GAS AND ELECTRIC
PROJECT COORDINATOR
P.O. BOX 1831
SAN DIEGO, CA 92112
(619) 696-2389

PACIFIC BELL
PROJECT COORDINATOR
4220 ARIZONA STREET, ROOM 100
SAN DIEGO, CA 92104
(619) 574-4310

AS-BUILT
Contract No. BUS-443B
Date NOV. 2000

CONSTRUCTION CHANGE TABLE		
CHANGE	DATE	SHEET NUMBERS REVISED OR ADDED THIS CHANGE

EARTH TECH
9675 BUSINESS PARK AVENUE SUITE 110, SAN DIEGO, CA. 92131
TEL: (619) 536-5610

REGISTERED PROFESSIONAL ENGINEER — STEPHEN D. MARKEZ — Exp. 3-31-00 — 12559 — STATE OF CALIFORNIA

DESIGNED BY SDM	DATE 7/98
DRAWN BY KMB	7/98
CHECKED BY SDM	7/98
MTDB PRJ. ENG.	

MTDB
Metropolitan Transit Development Board
1255 Imperial Avenue, Suite 1000, San Diego, Ca. 92101-7490 (619)231-1466

IAD BUS MAINTENANCE FACILITY
BUS MAINTENANCE FACILITY

VICINITY MAP AND PROJECT DIRECTORY

SCALE	NONE
MTDB CONTRACT NO.	BUS-443B
DRAWING NO.	SHEET NO.
T00.1	1

JOB NUMBER 24990 R-14 FILE NAME 443BMAP_T00-1.DWG DATE 11-12-98

DRAWING INDEX

DWG NO.	TITLE
GENERAL	COVER SHEET
T00.1	VICINITY MAP AND PROJECT DIRECTORY
T00.2	DRAWING INDEX
T00.3	NOTES, LEGEND, AND VICINITY MAP
CIVIL	
C10.1	HORIZONTAL CONTROL PLAN
C10.2	CONSTRUCTION STAGING AND DEMOLITION PLAN
C10.3	SITE UTILITY PLAN
C10.4	GRADING AND PAVING PLAN
C10.5	16TH STREET IMPROVEMENT PLAN
C10.6	K STREET IMPROVEMENT PLAN
C10.7	STRIPING PLAN
C10.8	SECTIONS AND DETAILS
C10.9	SCREEN WALL – SECTIONS AND DETAILS

DRAWING INDEX (CONT.)

DWG NO.	TITLE
ARCHITECTURAL	
A10.1	GENERAL NOTES, SYMBOLS, AND ABBREVIATIONS
A10.2	CODE ANALYSIS/FLOOR PLANS
A11.1	GROUND FLOOR PLAN
A11.2	GROUND AND STREET LEVEL FLOOR PLANS
A11.3	SECOND FLOOR PLAN
A11.4	SECOND FLOOR PLAN
A12.1	ROOF PLANS
A13.1	GROUND FLOOR REFLECTED CEILING PLANS
A13.2	SECOND FLOOR REFLECTED CEILING PLANS
A20.1	EXTERIOR ELEVATIONS
A20.2	EXTERIOR ELEVATIONS
A30.1	BUILDING SECTIONS
A30.2	BUILDING SECTIONS
A31.1	WALL SECTIONS
A31.2	WALL SECTIONS
A32.1	ENLARGED STAIR PLANS AND DETAILS
A32.2	STAIR SECTIONS AND DETAILS
A32.3	ENLARGED ELEVATOR PLANS, SECTION AND DETAILS
A32.4	ENLARGED PLANS
A32.5	ENLARGED PLANS AND ELEVATIONS
A40.1	EQUIPMENT PLAN
A40.2	EQUIPMENT PLAN AND SCHEDULE
A50.1	INTERIOR ELEVATIONS
A50.2	INTERIOR ELEVATIONS
A51.1	WALL FINISH SCHEDULE, FINISH COLORS AND MATERIALS
A51.2	DOOR SCHEDULES AND TYPES
A51.3	WINDOW SCHEDULE, TYPES AND DETAILS
A51.4	WALL FINISH SCHEDULE, FINISH COLORS AND MATERIALS
A60.1	EXTERIOR AND TRENCH DETAILS
A60.3	DOOR DETAILS
A60.4	DOOR AND WINDOW DETAILS
A61.1	PARTITION TYPES AND METAL STUD FRAMING DETAILS
A61.2	CEILING AND MISCELLANEOUS DETAILS
A63.1	TYPICAL DISABLED ACCESS DETAILS

DRAWING INDEX (CONT.)

DWG NO.	TITLE
STRUCTURAL	
S10.1	TYPICAL STRUCTURAL NOTES
S10.2	TYPICAL STRUCTURAL DETAILS – 1
S10.3	TYPICAL STRUCTURAL DETAILS – 2
S10.4	TYPICAL STRUCTURAL DETAILS – 3
S11.0	OVERALL FOUNDATION PLAN
S11.1	ENLARGED FOUNDATION PLAN – 1
S11.2	ENLARGED FOUNDATION PLAN – 2
S12.1	ENLARGED 2ND LEVEL FRAMING PLAN – 1
S13.0	OVERALL ROOF FRAMING PLAN
S13.1	ENLARGED ROOF FRAMING PLAN – 1
S13.2	ENLARGED ROOF FRAMING PLAN – 2
S20.1	STRUCTURAL ELEVATIONS – 1
S30.1	STRUCTURAL SECTIONS – 1
S30.2	STRUCTURAL SECTIONS – 2
S50.1	STRUCTURAL DETAILS – 1
S50.2	STRUCTURAL DETAILS – 2
S50.3	STRUCTURAL DETAILS – 3
MECHANICAL	
M–1	MECHANICAL SCHEDULES, NOTES, LEGEND
M–1.1	MECHANICAL TITLE 24, CONTROLS
M–2	MECHANICAL GROUND FLOOR PLANS
M–3	MECHANICAL GROUND FLOOR PLANS
M–4	MECHANICAL SECOND FLOOR PLANS
M–5	MECHANICAL ROOF PLANS
M–6	MECHANICAL DETAILS
PLUMBING	
P–1	PLUMBING LEGEND, REGULATORY, GENERAL, PROJECT, NOTES
P–2	PLUMBING SCHEDULES
P–3	PLUMBING FLOOR PLANS
P–4	PLUMBING FLOOR PLANS
P–5	PLUMBING FLOOR PLANS
P–6	PLUMBING ROOF PLANS
P–7	PLUMBING DETAILS, DIAGRAM
P–8	PLUMBING DETAILS
P–9	PLUMBING DETAILS
P–10	PLUMBING DETAILS
ELECTRICAL	
E10.1	ELECTRICAL LEGEND AND ABBREVIATIONS
E10.2	ELECTRICAL SITE PLAN
E11.1	GROUND FLOOR NORTH LIGHTING PLAN
E11.2	GROUND FLOOR SOUTH LIGHTING PLAN
E11.3	SECOND FLOOR LIGHTING PLAN
E12.1	GROUND FLOOR NORTH POWER PLAN
E12.2	GROUND FLOOR SOUTH POWER PLAN

DRAWING INDEX (CONT.)

DWG NO.	TITLE
ELECTRICAL (CONT.)	
E12.3	SECOND FLOOR POWER PLAN
E13.1	GROUND FLOOR NORTH SIGNAL PLAN
E13.2	GROUND FLOOR SOUTH SIGNAL PLAN
E13.3	SECOND FLOOR SIGNAL PLAN
E20.1	FIXTURE SCHEDULE AND RISER DIAGRAMS
E20.2	RISER DIAGRAMS
E20.3	RISER DIAGRAMS
E20.4	DETAILS AND ENLARGED PLAN
E30.1	SINGLE LINE DIAGRAM
E30.2	ELECTRICAL PANEL SCHEDULES
E30.3	ELECTRICAL SCHEDULES
E30.4	TITLE 24 SCHEDULES
TRAFFIC CONTROL	
TC10.1	TRAFFIC CONTROL NOTES AND LEGEND
TC10.2	TRAFFIC CONTROL– 16 TH STREET
LANDSCAPE AND PLANTING	
LD–1	LANDSCAPE CONSTRUCTION PLAN – 16 TH STREET
LD–2	LANDSCAPE PLANTING PLAN – 16 TH STREET
LD–3	LANDSCAPE & PLANTING LEGEND, NOTES, & DETAILS
LD–4	LANDSCAPE & PLANTING DETAILS
LD–5	IRRIGATION PLAN – 16 TH STREET
LD–6	IRRIGATION DETAILS
LD–7	IRRIGATION LEGEND & NOTES
REFERENCE DRAWINGS	
# 106	VINYL TILE PATTERN DRAWING
# 107	FINISH PLAN INTERIOR

AS-BUILT
Q. duPerrier
Contract No. BUS-443B
Date NOV. 2000

CONSTRUCTION CHANGE TABLE

CHANGE	DATE	SHEET NUMBERS REVISED OR ADDED THIS CHANGE
0	7/8/99	CONFORMED–NEW DRAWING C10.9 ADDED PER ADDENDUM

EARTH TECH
9675 BUSINESS PARK AVENUE SUITE 110, SAN DIEGO, CA. 92131
TEL: (619) 536–5610

REGISTERED PROFESSIONAL ENGINEER STEPHEN D. MCABEE Exp.3-31-00 12550 STATE OF CALIFORNIA

		DATE
DESIGNED BY	SDM	7/98
DRAWN BY	LES	7/98
CHECKED BY	SDM	7/98
MTDB PRJ. ENG.		

MTDB
Metropolitan Transit Development Board
1255 Imperial Avenue, Suite 1000, San Diego, Ca. 92101–7490 (619)231–1466

IMPERIAL AVENUE DIVISION
BUS MAINTENANCE FACILITY

DRAWING INDEX

SCALE	NONE
MTDB CONTRACT NO.	BUS–443B
DRAWING NO.	T00.2
SHEET NO.	2

JOB NUMBER 24990 R-14 FILE NAME: A43SHACL T00-2.DWG DATE: 3/17/99

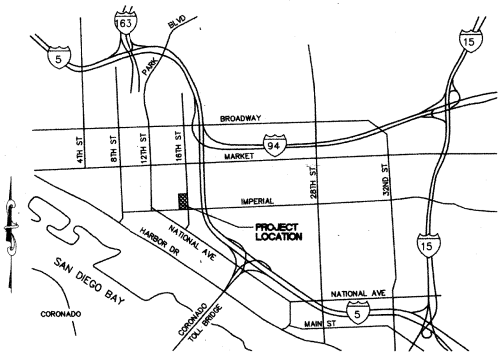

VICINITY MAP
N.T.S.

LEGAL DESCRIPTION

BLOCKS 37, 53, 54, AND LOTS 1 TO 20 IN BLOCK 38 OF SHERMAN'S RESUBDIVISION OF SHERMAN'S ADDITION, IN THE CITY OF SAN DIEGO, IN THE COUNTY OF SAN DIEGO, IN THE STATE OF CALIFORNIA, ACCORDING TO THE MAP NO. 856 THEREOF, FILED IN THE OFFICE OF COUNTY RECORDER OF SAN DIEGO COUNTY, NOVEMBER 4, 1886.

WATER NOTES

1. ALL CONNECTIONS TO EXISTING WATER MAINS ARE TO BE DONE BY THE CITY'S WATER DEPARTMENT FOR WHICH THE FOLLOWING FEES WILL BE CHARGED. IF THE CONNECTIONS ARE NOT READY TO BE MADE AND THE FEES PAID BEFORE 10/7/99, THE CITY RESERVES THE RIGHT TO ADJUST THE FEES ACCORDING TO THE FEE SCHEDULE IN EFFECT AT THE TIME THE CONNECTIONS ARE MADE. IT IS THE RESPONSIBILITY OF THE CONTRACTOR TO EXPOSE THE EXISTING MAIN AT THE CONNECTION POINT AND TO INSTALL THE NEW MAIN AT THE ALIGNMENT AND GRADE WHICH WILL PERMIT THE CITY TO MAKE A "STRAIGHT-IN" CONNECTION WITHOUT USING MORE THAN 10 LINEAL FEET OF PIPE.

ITEM	COST	TYPE OF CONNECTION	SHEET NO.
ITEM NO. 1	$1925	8" PERMANENT CUT & PLUG	29557-2-D
ITEM NO. 2	$1925	8" PERMANENT CUT & PLUG	29557-2-D

2. ABANDONED WATER MAIN LOCATED UNDER NEW BUILDING FOUNDATION SHALL BE REMOVED AND REMAINING PORTIONS SHALL BE ABANDONED IN ACCORDANCE WITH THE PROVISIONS OF THE "GREENBOOK," STANDARD SPECIFICATIONS FOR PUBLIC WORKS CONSTRUCTION (1997 EDITION).
3. THE OWNER SHALL BE RESPONSIBLE FOR PROVIDING THE METROPOLITAN WASTEWATER AND/OR THE WATER UTILITIES DEPARTMENTS WITH A LOCK SET FOR KEYED ACCESS. CONTACT NORMAN RITTER, LOCK SMITH OF REAL ESTATE ASSETS DEPARTMENT, FACILITIES MANAGEMENT DIVISION, AT 525-8552 TO COORDINATE FEE PAYMENT AND INSTALLATION REQUIREMENTS OF KEYED LOCK SET IN THE GATE CALL BOX.

GENERAL NOTES

1. APPROVAL OF THESE PLANS BY THE CITY ENGINEER DOES NOT AUTHORIZE ANY WORK TO BE PERFORMED UNTIL A PERMIT HAS BEEN ISSUED.
2. DEVIATIONS OR CHANGES FROM THESE SIGNED PLANS WILL NOT BE ALLOWED UNLESS A CONSTRUCTION CHANGE IS APPROVED BY THE CITY ENGINEER OR THE CHANGE IS REQUIRED BY THE CITY INSPECTOR.
3. CONTRACTOR SHALL BE RESPONSIBLE FOR ANY MONUMENTATION AND/OR BENCHMARKS WHICH WILL BE DISTURBED OR DESTROYED BY CONSTRUCTION. SUCH POINTS SHALL BE REFERENCED AND REPLACED WITH APPROPRIATE MONUMENTATION BY A LICENSED LAND SURVEYOR OR A REGISTERED CIVIL ENGINEER AUTHORIZED TO PRACTICE LAND SURVEYING. A CORNER RECORD OR RECORD OF SURVEY, AS APPROPRIATE, SHALL BE FILED BY THE LICENSED LAND SURVEYOR OR REGISTERED CIVIL ENGINEER AS REQUIRED BY THE LAND SURVEYOR'S ACT.
4. THE CONTRACTOR SHALL TAKE DUE PRECAUTIONARY MEASURES TO PROTECT ANY EXISTING UTILITIES OR STRUCTURES LOCATED AT THE WORK SITE. IT IS THE CONTRACTOR'S RESPONSIBILITY TO CONTACT THE FOLLOWING OWNER OF UTILITIES OR STRUCTURES PRIOR TO ANY EXCAVATION FOR VERIFICATION AND LOCATION OF UTILITIES.

   BEFORE EXCAVATING, VERIFY LOCATION OF UNDERGROUND UTILITIES, CONTACT:

GAS AND ELECTRIC	235-6323
UNDERGROUND SERVICE ALERT	(800)422-4133
WATER AND SEWER	(800)422-4133
COMMUNICATIONS DIVISION	235-5505
BUILDING AND IRRIGATION	235-5500
SOUTHWESTERN CABLE TV	695-3100 X405

   USE SIGNS, DELINEATORS, BARRICADES, ETC., AS PER CALIFORNIA DEPARTMENT OF TRANSPORTATION " MANUAL OF TRAFFIC CONTROLS FOR CONSTRUCTION AND MAINTENANCE WORK ZONE 5," TO EXCAVATE" WILL BE VALID. FOR YOUR DIGALERT I.D. NUMBER (1990 EDITION). USE DELINEATORS AND STEADY BURN LIGHTS TO OUTLINE THE TRAFFIC PATH; BARRICADES TO PROTECT WORK AREA.

   IMPORTANT NOTICE:
   SECTIONS 4216/4217 OF THE GOVERNMENT CODE REQUIRES A DIGALERT IDENTIFICATION NUMBER BE ISSUED BEFORE A "PERMIT TO EXCAVATE" WILL BE VALID. FOR YOUR DIGALERT I.D. NUMBER CALL UNDERGROUND SERVICE ALERT TOLL-FREE 1-800-422-4133 TWO WORKING DAYS BEFORE YOU DIG
5. AS-BUILT DRAWINGS MUST BE SUBMITTED TO THE RESIDENT ENGINEER PRIOR TO ACCEPTANCE OF THIS PROJECT.
6. UNDERGROUNDING OF EXISTING AND/OR PROPOSED PUBLIC UTILITY SYSTEMS AND SERVICE FACILITIES IS REQUIRED ACCORDING TO SAN DIEGO MUNICIPAL CODE SECTION 102.0404, SUBSECTION 2.

BENCH MARK
SEBP 16TH STREET AND K STREET
ELEV: 34.02

BASIS OF BEARING
CL 16TH STREET N00°00'00"E
CL INTERSECTION FND MON 16TH STREET/K STREET
TO CL INTERSECTION FND MON 16TH STREET/L STREET

DECLARATION OF RESPONSIBLE CHARGE

I HEREBY DECLARE THAT I AM THE ENGINEER OF WORK FOR THIS PROJECT, THAT I HAVE EXERCISED RESPONSIBLE CHARGE OVER THE DESIGN OF THE PROJECT AS DEFINED IN SECTION 6703 OF THE BUSINESS AND PROFESSIONS CODE, AND THAT THE DESIGN IS CONSISTENT WITH CURRENT STANDARDS.

I UNDERSTAND THAT THE CHECK OF PROJECT DRAWINGS AND SPECIFICATIONS BY THE CITY OF SAN DIEGO IS CONFINED TO A REVIEW ONLY AND DOES NOT RELIEVE ME, AS ENGINEER OF WORK, OF MY RESPONSIBILITIES FOR PROJECT.

STEPHEN D. McAREE R.C.E. 42550 DATE:

LEGEND PRIVATE IMPROVEMENTS

ITEM	STD. DWG	SYMBOL
SEWER LATERAL (PRIVATE)	SDS-100,S-4,S-13,S-19	S
INDUSTRIAL WASTE LINE(PRIVATE)	SDS-100,S-4,S-13	IW
SEWER CLEANOUT (PRIVATE)	S-3	
ASPHALT PAVING (PRIVATE)	PER PLAN	
ASPHALT OVERLAY (PRIVATE)	PER PLAN	
PCC PAVING (PRIVATE)	PER PLAN	
6" PERF. PVC FND. SUBDRAIN	PER PLAN	

LEGEND EXISTING FACILITIES

ITEM	STD. DWG	SYMBOL
EXISTING WATER		W
EXISTING SEWER		S
EXISTING GAS		G
EXISTING ELECTRIC		E
EXISTING TELEPHONE		T
EXISTING COMPRESSED AIR		A
EXISTING MULTIPLE TELEPHONE DUCTS		MTD
EXISTING MANHOLE		
EXISTING WATER VALVE		
EXISTING REDUCER		
EXISTING FIRE HYDRANT		
EXISTING STREET LIGHT		
EXISTING POWER POLE		
EXISTING UTILITY BOX OR STORM INLET		
EXISTING SPOT ELEVATION		× 21.50
EXISTING WATER LATERAL		W
EXISTING SEWER LATERAL		S
EXISTING GAS LATERAL		G
EXISTING RETAINING WALL		

INDEX TO PUBLIC IMPROVEMENT PLANS

CITY DWG NO.	MTDB DWG NO.	TITLE
29557-1-D	T00.3	NOTES, LEGEND, AND VICINITY MAP
29557-2-D	C10.3	SITE UTILITY PLAN
29557-3-D	C10.5	16TH STREET IMPROVEMENT PLAN
29557-4-D	C10.6	K STREET IMPROVEMENT PLAN
29557-5-D	TC10.1	TRAFFIC CONTROL-NOTES AND LEGEND
29557-6-D	TC10.2	TRAFFIC CONTROL - 16 TH STREET
29557-7-D	LD-1	LANDSCAPE CONSTRUCTION PLAN - 16 TH STREET
29557-8-D	LD-2	LANDSCAPE PLANTING PLAN - 16 TH STREET
29557-9-D	LD-3	LANDSCAPE & PLANTING LEGEND, NOTES, & DETAILS
29557-10-D	LD-4	LANDSCAPE & PLANTING DETAILS
29557-11-D	LD-5	IRRIGATION PLAN - 16 TH STREET
29557-12-D	LD-6	IRRIGATION DETAILS
29557-13-D	LD-7	IRRIGATION LEGEND & NOTES

TRAFFIC DATA TABLE

STREET	ADT *	STREET CLASSIFICATION	R.O.W.
K ST.	1800	INDUSTRIAL 2-LANE COLLECTOR	80'
L ST.	--	VACATED	80'
15TH ST.	--	VACATED	80'
16TH ST.	6000	INDUSTRIAL 2-LANE COLLECTOR	80'
IMPERIAL AVE.	6800	INDUSTRIAL 4-LANE COLLECTOR	80'

* ADT PER CITY OF SAN DIEGO TRAFFIC OPERATIONS MACHINE COUNT INDEX PRINTED 7/6/98

WORK TO BE DONE

THE IMPROVEMENTS CONSIST OF THE FOLLOWING WORK TO BE DONE IN ACCORDANCE WITH THESE PLANS, AND THE SPECIFICATIONS AND STANDARD DRAWINGS OF THE CITY OF SAN DIEGO.

STANDARD SPECIFICATIONS

1. STANDARD SPECIFICATIONS FOR PUBLIC WORKS CONSTRUCTION (1997 EDITION), INCLUDING REGIONAL AND CITY OF SAN DIEGO SUPPLEMENT AMENDMENTS, DOCUMENT 769331 FILED MAY 2, 1997.
2. CALIFORNIA DEPARTMENT OF TRANSPORTATION, "MANUAL OF TRAFFIC CONTROLS FOR CONSTRUCTION AND MAINTENANCE WORK ZONES," (1990 EDITION), DOCUMENT 769744 FILED NOVEMBER 7, 1990.
3. STATE OF CALIFORNIA DEPARTMENT OF TRANSPORTATION STANDARD SPECIFICATIONS (JULY 1992), DOCUMENT No. 769806, FILED JULY 9, 1992.

STANDARD DRAWINGS

1. CITY OF SAN DIEGO STANDARD DRAWINGS, DOCUMENT No. 769332, FILED MAY 2, 1997.
2. STATE OF CALIFORNIA DEPARTMENT OF TRANSPORTATION STANDARD PLANS (JULY 1992), DOCUMENT No.769805, FILED JULY 9, 1992.

LEGEND PUBLIC IMPROVEMENTS

ITEM	STD. DWG	SYMBOL
SAWCUT	-	
6" TYPE "H" CURB AND GUTTER	SDG-100, G-2	
PCC SIDEWALK	SDG-100, G-7 G-9,G-10,G-11	
9" PCC TRENCH PAVING WITH 1/4" TYPE F ASPHALT CAP & W/12" CLASS 2 AGG. BASE	SDG-113	
PEDESTRIAN RAMP	G-27, TYPE B	
COMMERCIAL DRIVEWAY	SDG-114	
TREE WELL	PER LANDSCAPE PLANS	
REMOVE WATERLINE	PER SPECIFICATIONS	
CUT AND PLUG WATER MAIN	PER SPECIFICATIONS	
EASEMENT VACATION	PER DOC. NO.	
PROPERTY LINE	-	
CENTERLINE	-	
SPOT ELEVATION	-	22.00
POINT OF CONNECTION		

ENGINEERING PERMIT NO. W48177
PRIVATE CONTRACT

IMPROVEMENT PLANS FOR:

16 TH AND K STREET

SAN DIEGO TRANSIT, IMPERIAL AVE DIVISION - BUS MAINTENANCE FACILITY

CITY OF SAN DIEGO, CALIFORNIA
ENGINEERING DEPARTMENT
SHEET 1 OF 13 SHEETS

W.O. NO. 98-267 (027000)

FOR CITY ENGINEER — DATE 4/28/99

DESCRIPTION	BY	APPROVED	DATE	FILED
ORIGINAL	EARTH TECH			SEP 10 99

1837-6283 NAD 83 COORDINATES

197-1723 LAMBERT COORDINATES

AS-BLT C.E.

CONTRACTOR C.E. WYLIE DATE STARTED 5-15-1999
INSPECTOR SEVERINO MENDOZA DATE COMPLETED 9-26-2000

29557-1-D DWG NO.

STEPHEN D. McAREE No. 37148 6-30-00 CIVIL — REGISTERED PROFESSIONAL ENGINEER — STATE OF CALIFORNIA

CONSTRUCTION CHANGE TABLE

CHANGE	DATE	SHEET NUMBER REVISED OR ADDED THIS CHANGE

EARTH TECH
9675 BUSINESS PARK AVENUE SUITE 110, SAN DIEGO, CA. 92131
TEL: (858) 536-5610

REGISTERED PROFESSIONAL ENGINEER — STEPHEN D. McAREE — Exp.6-30-00 — 42550 — STATE OF CALIFORNIA

		DATE
DESIGNED BY	SDM	11/5/98
DRAWN BY	LES	11/5/98
CHECKED BY	KAG	11/5/98
MTDB PRJ. ENG.	GPD	11/5/98

MTDB
Metropolitan Transit Development Board
1255 Imperial Avenue, Suite 1000, San Diego, Ca. 92101-7490 (619)231-1466

IMPERIAL AVENUE DIVISION
BUS MAINTENANCE FACILITY

NOTES, LEGEND AND VICINITY MAP

SCALE NONE
MTDB CONTRACT NO. BUS-443B
DRAWING NO. T00.3 SHEET NO. 3

AS-BUILT

JOB NUMBER 24990 R-R14 FILE NAME: 443B_CITY_TITLE_T00_3.DWG 4/20/99

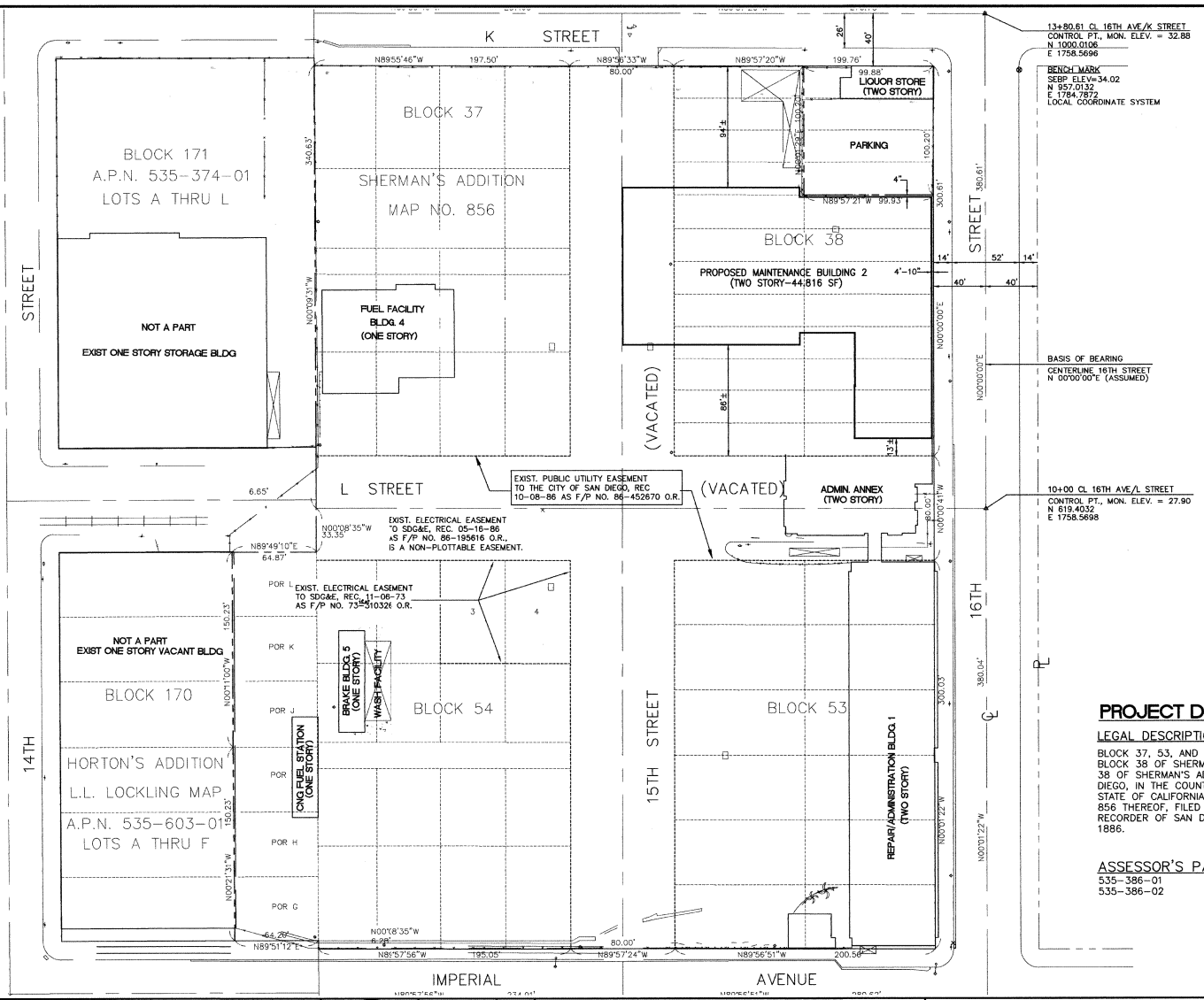

PROJECT DATA

LEGAL DESCRIPTION:

BLOCK 37, 53, AND 54, AND LOTS 1 TO 20 IN BLOCK 38 OF SHERMAN'S RESUBDIVISION OF BLOCK 38 OF SHERMAN'S ADDITION, IN THE CITY OF SAN DIEGO, IN THE COUNTY OF SAN DIEGO, IN THE STATE OF CALIFORNIA, ACCORDING TO THE MAP NO. 856 THEREOF, FILED IN THE OFFICE OF COUNTY RECORDER OF SAN DIEGO COUNTY, NOVEMBER 4, 1886.

ASSESSOR'S PARCEL NO.

535-386-01
535-386-02

AS-BUILT
A. deBernardi
Contract No. BUS-443B
Date NOV. 2000

CONSTRUCTION CHANGE TABLE		
CHANGE	DATE	SHEET NUMBERS REVISED OR ADDED THIS CHANGE

EARTH TECH
9675 BUSINESS PARK AVENUE, SUITE 110, SAN DIEGO, CA. 92131
TEL: (619) 536-5610

REGISTERED PROFESSIONAL ENGINEER
STEPHEN D. MANGE
Exp. 3-31-00
42550
STATE OF CALIFORNIA

DESIGNED BY SDM	DATE 7/98
DRAWN BY LES	7/98
CHECKED BY SDM	7/98
MTDB PRJ. ENG.	

MTDB
Metropolitan Transit Development Board
1255 Imperial Avenue, Suite 1000, San Diego, Ca. 92101-7490 (619)231-1466

IMPERIAL AVENUE DIVISION
BUS MAINTENANCE BUILDING

HORIZONTAL CONTROL PLAN

SCALE	1"=40'
MTDB CONTRACT NO.	BUS-443B
DRAWING NO.	C10.1
SHEET NO.	4

JOB NUMBER 24960 R-14 FILE NAME: A33B_HORTL_CTL_1.DWG DATE: 12-28-98

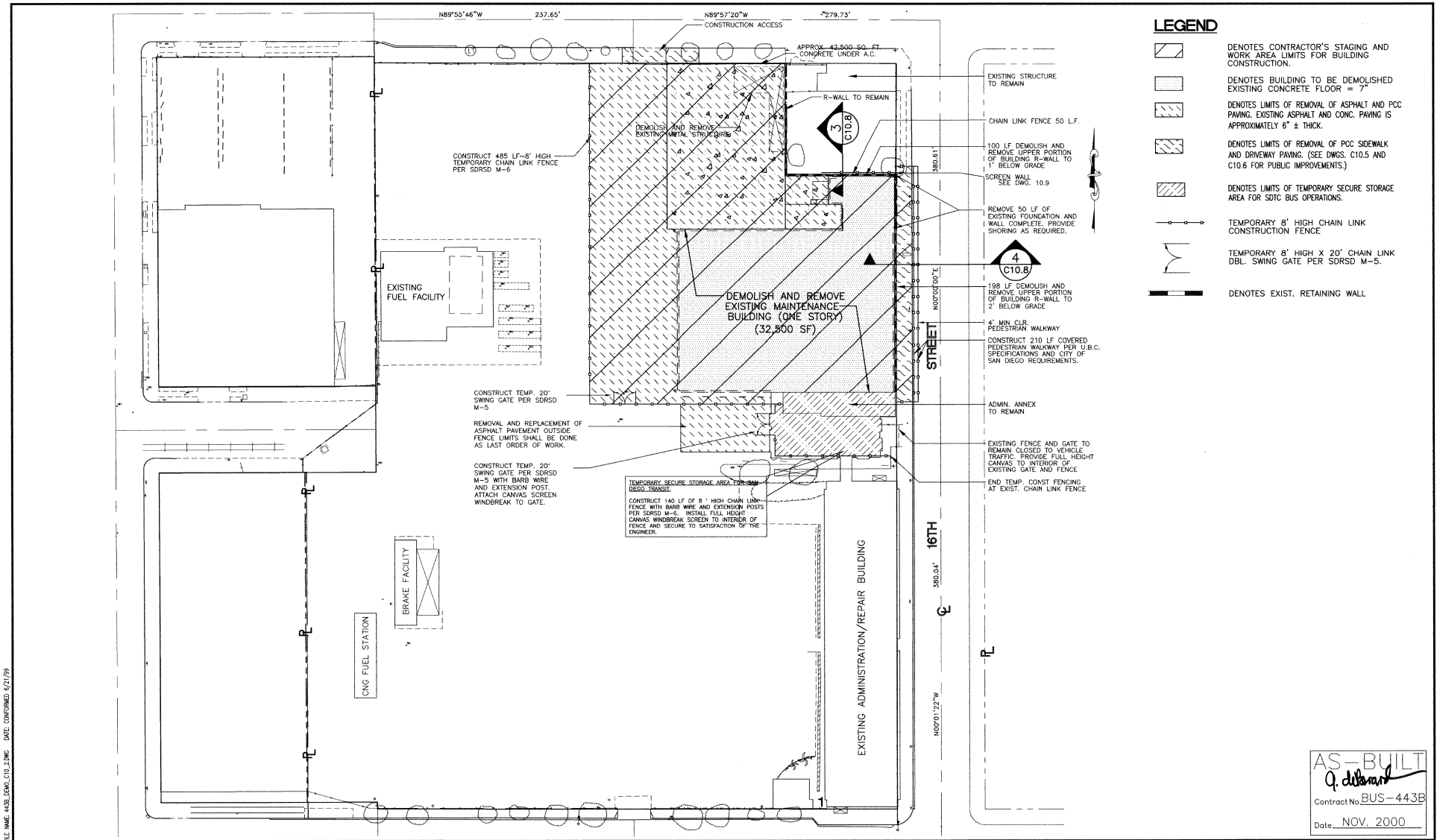

AS-BUILT
Q. deSmard
Contract No BUS-443B
Date NOV. 2000

CONSTRUCTION CHANGE TABLE		
CHANGE	DATE	SHEET NUMBERS REVISED OR ADDED THIS CHANGE

EARTH TECH
9675 BUSINESS PARK AVENUE SUITE 110, SAN DIEGO, CA. 92131
TEL: (619) 536-5610

REGISTERED PROFESSIONAL ENGINEER STEPHEN D. MARKEL Exp.3-31-00 12559 STATE OF CALIFORNIA

		DATE
DESIGNED BY	SDM	7/98
DRAWN BY	LES	7/98
CHECKED BY	SDM	7/98
MTDB PRJ. ENG.		

MTDB
Metropolitan Transit Development Board
1255 Imperial Avenue, Suite 1000, San Diego, Ca. 92101-7490 (619)231-1466

IMPERIAL AVENUE DIVISION
BUS MAINTENANCE BUILDING

CONSTRUCTION STAGING AND BUILDING DEMOLITION PLAN

SCALE 1"=40'
MTDB CONTRACT NO. BUS-443B
DRAWING NO. C10.2
SHEET NO. 5

JOB NUMBER 22964 R-14 FILE NAME 443B_DEMO_C10_2.DWG DATE: CONFORMED 6/21/99

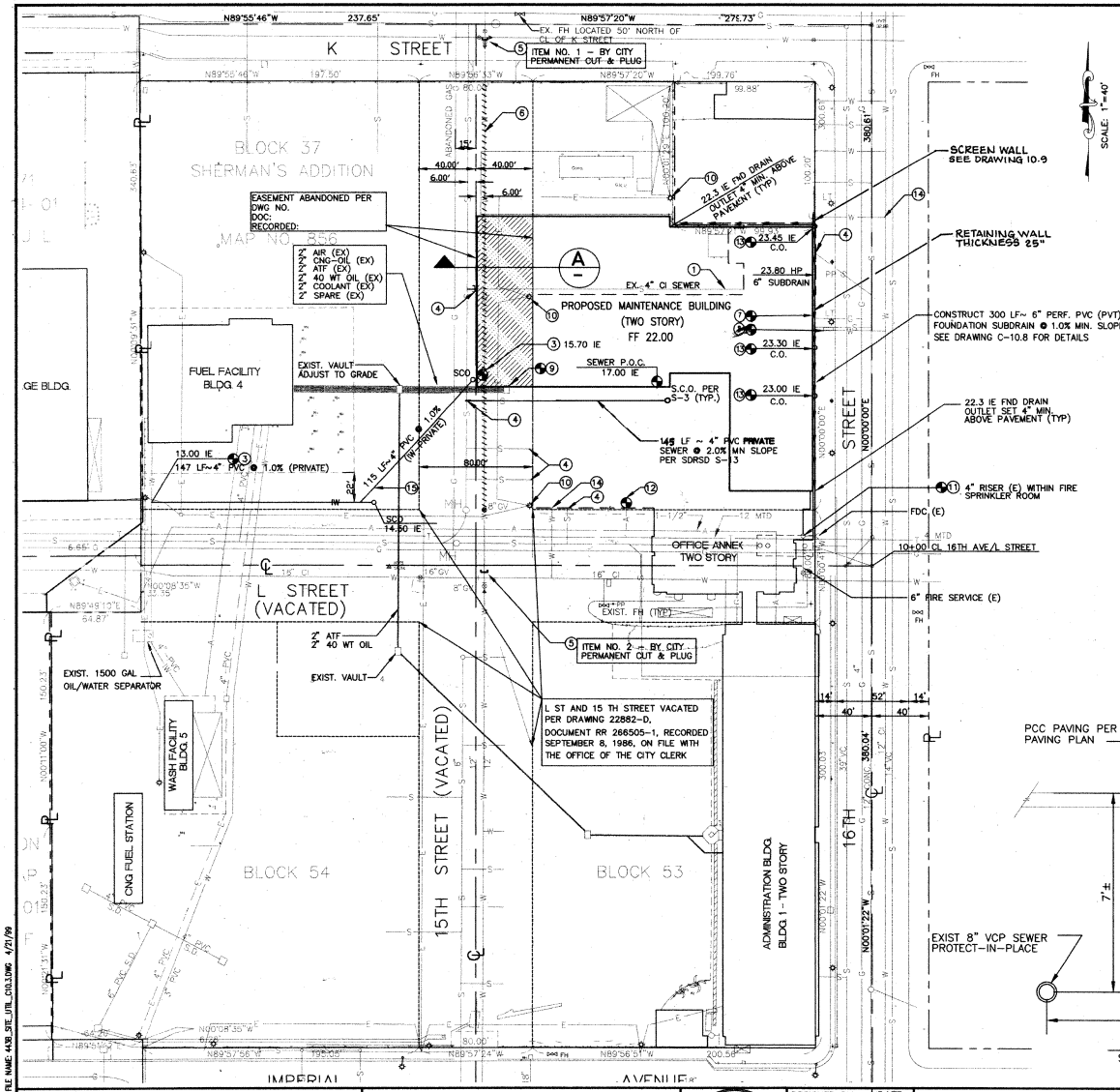

CNG NOTES

1. FUELING AND DE-FUELING COMPRESSED NATURAL GAS (CNG) BUSES IS NOT A PART OF THIS PROJECT.
2. ALL DESIGN, PERMITS, AND CONSTRUCTION OF FUELING AND DE-FUELING FACILITIES ARE PART OF SAN DIEGO GAS & ELECTRIC PROJECT NO. 1505600, DRAWING NO. CNG-23-T.

CONSTRUCTION NOTES

1. REMOVE EXISTING 4" CI SEWER (PRIVATE) TO MAIN AND CAP.
2. SEWER POINT OF CONNECTION. CONNECT 4" PVC SEWER LATERAL (PRIVATE) TO EXISTING LATERAL. MAINTAIN 5' MINIMUM DEPTH TO BUILDING SEWER.
3. INDUSTRIAL WASTE (IW) POINT OF CONNECTION: CONNECT NEW 4" PCC IW TO EXISTING 4" PVC WITH WYE CONNECTION PER SDRSD S-13. CONTRACTOR SHALL VERIFY LOCATION AND ELEVATION OF I.W. P.O.C. PRIOR TO CONSTRUCTION.
4. CUT AND CAP EXISTING SEWER LATERALS.
5. CITY OF SAN DIEGO TO CUT & PLUG WATER MAIN AT EXISTING CROSS. CONTRACTOR TO RESURFACE TRENCH PER SDG-107. (ALSO, SEE WATER NOTES ON DWG 29557-1-D)
6. REMOVE APPROX. 300 LF OF 8" CI WATER MAIN IN VACATED PORTION OF 15TH STREET, (SEE WATER NOTES ON DWG 29557-1-D)
7. GAS POINT OF CONNECTION. REMOVE EXISTING (PRIVATE) GAS PIPING ON CUSTOMER SIDE OF METER. CONNECT NEW GAS LINES TO EXISTING METER PER PLUMBING PLAN.
8. WATER POINT OF CONNECTION EXIST. 2" WATER METER AND BACKFLOW TO REMAIN. REMOVE EXISTING (PRIVATE) 2" WATER LATERAL UP TO EXISTING WATER METER AND BACKFLOW ASSEMBLY AND CONNECT NEW WATER LATERAL (PRIVATE) TO CUSTOMER SIDE OF EXISTING 2" METER.
9. PRODUCT LINE POINT OF CONNECTION: EXISTING 2" PRODUCT LINES. EXTEND LINES TO BUILDING PER PLUMBING PLANS. ADJUST TOP OF VAULT TO NEW PAVEMENT GRADE.
10. RELOCATE LIGHT STANDARD AND ASSOCIATED CONDUIT & WIRING PER SITE ELECTRICAL PLAN.
11. FIRE SPRINKLER POINT OF CONNECTION: SEE PLUMBING PLANS FOR DISPOSITION OF FIRE SPRINKLER REQUIREMENTS.
12. COMPRESSED AIR POINT OF CONNECTION: SEE PLUMBING PLANS FOR DISPOSITION OF COMPRESSED AIR REQUIREMENTS.
13. ROOF DRAIN POINT OF CONNECTION: CONNECT ROOF DRAIN TO PRIVATE 6" FND. SUBDRAIN. PROVIDE TYPE B WYE CONNECTION AND CLEANOUT PER SDRSD S-3. (SEE PLUMBING PLAN)
14. CONTRACTOR SHALL KILL WATER SERVICE AT MAIN PER SPECIFICATIONS.
15. CONSTRUCT 4" PVC INDUSTRIAL WASTE SEWER DRAIN (PRIVATE).

ALL ONSITE, PRIVATE IMPROVEMENTS SHOWN ON THIS DRAWING ARE FOR INFORMATION ONLY. THE CITY ENGINEER'S APPROVAL OF THIS DRAWING, IN NO WAY CONSTITUTES AN APPROVAL OF SAID PRIVATE IMPROVEMENTS. A SEPARATE PERMIT FOR SUCH IMPROVEMENTS MAY BE REQUIRED.

PRIVATE CONTRACT

UTILITY PLAN FOR:
K, L, 15TH, AND 16TH STREET
SAN DIEGO TRANSIT, IMPERIAL AVE DIVISION – BUS MAINTENANCE FACILITY

CITY OF SAN DIEGO, CALIFORNIA
ENGINEERING DEPARTMENT
SHEET 2 OF 13 SHEETS

W.O. NO. 98-267 (037000)

FOR CITY ENGINEER — DATE 4/28/99

DESCRIPTION	BY	APPROVED	DATE	FILMED
ORIGINAL	EARTH TECH			99 05 19

1837-6283 RAD 83 COORDINATES

197-1723 LAMBERT COORDINATES

AS-BLT C.E.

CONTRACTOR C.E. WYLIE DATE STARTED 5-15-1999
INSPECTOR SEVERINO MENDOZA DATE COMPLETED 9-14-2000

29557-2-D DWG NO.

EARTH TECH
9675 BUSINESS PARK AVENUE SUITE 110, SAN DIEGO, CA. 92131
TEL: (858) 536-5610

REGISTERED PROFESSIONAL ENGINEER — STEPHEN D. MARKEE — Exp. 3-31-00 — #25101 — STATE OF CALIFORNIA

	DESIGNED BY	DATE
	SDM	11/5/98
	DRAWN BY	
	LES	11/5/98
	CHECKED BY	
	KAG	11/5/98
	MTDB PRJ. ENG.	
	GPD	11/5/98

MTDB
Metropolitan Transit Development Board
1255 Imperial Avenue, Suite 1000, San Diego, Ca. 92101-7490 (619)231-1466

IMPERIAL AVENUE DIVISION
BUS MAINTENANCE FACILITY

SITE UTILITY PLAN

SCALE 1"=40'

MTDB CONTRACT NO. BUS-443B

DRAWING NO. C10.3 | SHEET NO. 6

AS-BUILT

JOB NUMBER 24990 R-R14 FILE NAME: 443B_SITE_UTIL_C10.3.DWG 4/21/99

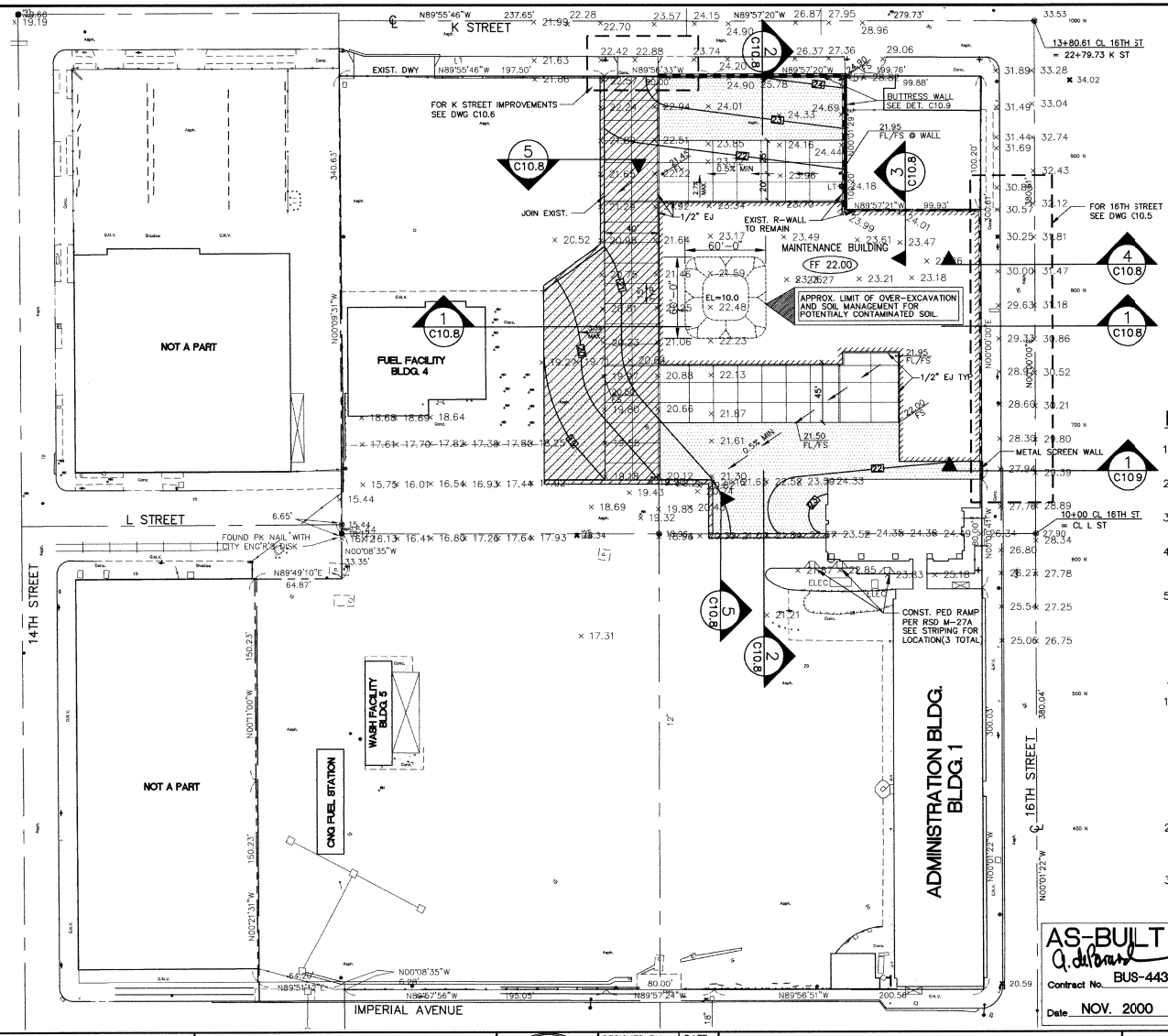

LEGEND

- CONSTRUCT NEW ASPHALT PAVING 5" AC ON 15" CLASS 2 AGG. BASE
- CONSTRUCT NEW CONCRETE PAVING 8" PCC ON 12" CLASS 2 AGG BASE
- CONSTRUCT NEW ASPHALT VARIABLE DEPTH OVERLAY.
- CONSTRUCT PEDESTRIAN RAMP PER SDRSD M-27A
- × 23.18 DENOTES EXISTING SPOT ELEVATION
- 21.50 DENOTES PROPOSED SPOT ELEVATION
- FF 22.00 DENOTES FINISH FLOOR ELEVATION
- DENOTES FINISH CONTOUR ELEVATION
- DENOTES WEAKENED PLAIN JOINT (WPJ)
- DENOTES EXPANSION JOINT (EJ)
- DENOTES FLOWLINE SWALE
- DENOTES OVER-EXCAVATION FOR SOIL ASSESSMENT

PAVING NOTES

1. ALIGN JOINTS WITH CENTERLINE OF BUILDING COLUMNS AND EDGE OF BUILDING STRUCTURE.
2. WEAKENED PLANE JOINTS SHALL BE 15 FEET ON CENTER IN EACH DIRECTION UNLESS OTHERWISE SHOWN ON THE PLANS.
3. EDGES OF ALL CONTACT AND EXPANSION JOINTS SHALL HAVE A RADIUS OF 1/8".
4. JOINTS SHALL BE IN ACCORDANCE WITH SDRSD G-10. WEAKENED PLANE JOINTS SHALL BE 2" DEEP AND SHALL BE ACHIEVED BY SAWCUT METHOD.
5. 1/2" THICK EXPANSION JOINT FILLER MATERIAL SHALL BE PLACED ALONG ALL PERIMETER EDGES OF BUILDING APRON AND FLOOR SLABS. JOINT FILLER SHALL BE PLACED 1/2" BELOW FINISH SURFACE AND SEALED WITH ELASTOMERIC JOINT SEALANT PER SPECIFICATIONS.

GRADING AND GEOTECHNICAL NOTES

1. ALL GRADING SHALL BE DONE UNDER THE OBSERVATION OF A QUALIFIED SOILS ENGINEER IN ACCORDANCE WITH THE RECOMMENDATIONS SET FORTH IN THE SOILS REPORT ENTITLED, " GEOTECHNICAL AND LIMITED ENVIRONMENTAL EXPLORATION PROGRAM, PROPOSED BUILDING 2 BUS MAINTENANCE FACILITY, IMPERIAL AVENUE DIVISION, 100 16TH STREET, SAN DIEGO, CALIFORNIA", PREPARED BY EARTH TECH INC., DATED NOVEMBER 1997, AND REPORT ENTITLED "ADDENDUM TO THE REPORT OF OBSERVATION OF SITE REMEDIATION, AND WORK PLAN FOR ADDITIONAL ASSESSMENT, SAN DIEGO TRANSIT IMPERIAL AVENUE DIVISION BUS MAINTENANCE FACILITY H # 01049-001, 01049-002", PREPARED BY EARTH TECH INC., DATED MAY 26, 1998; THE STANDARD SPECIFICATIONS, AND THE SPECIAL PROVISIONS.
2. THESE PLANS HAVE BEEN REVIEWED BY THE UNDERSIGNED AND FOUND TO BE IN CONFORMANCE WITH THE RECOMMENDATIONS AND SPECIFICATIONS OUTLINED IN THE SOILS REPORT PREPARED FOR THIS DEVELOPMENT.
3. UPON COMPLETION OF BUILDING DEMOLITION, THE CONTRACTOR WILL BE REQUIRED TO EXCAVATE ADJACENT TO A PREVIOUSLY REMOVED UNDERGROUND STORAGE TANK AND PERFORM SOIL ASSESSMENT FOR POTENTIALLY CONTAMINATED SOIL IN ACCORDANCE WITH THE SPECIFICATIONS AND AS DIRECTED BY THE ENGINEER. THE LIMIT OF OVER-EXCAVATION IS APPROXIMATE ONLY. ACTUAL LIMITS SHALL BE DETERMINED BY THE ENGINEER.

AS-BUILT
A. deBrauwere
Contract No. BUS-443B
Date NOV. 2000

CONSTRUCTION CHANGE TABLE		
CHANGE	DATE	SHEET NUMBERS REVISED OR ADDED THIS CHANGE

EARTH TECH
9675 BUSINESS PARK AVENUE SUITE 110, SAN DIEGO, CA. 92131
TEL: (619) 536-5610

REGISTERED PROFESSIONAL ENGINEER STEPHEN D. MAHEE Exp. 3-31-00 12550 STATE OF CALIFORNIA

DESIGNED BY SDM	DATE 7/98
DRAWN BY LES	7/98
CHECKED BY SDM	7/98
MTDB PRJ. ENG.	

MTDB
Metropolitan Transit Development Board
1255 Imperial Avenue, Suite 1000, San Diego, Ca. 92101-7490 (619)231-1466

IMPERIAL AVENUE DIVISION
BUS MAINTENANCE BUILDING

GRADING AND PAVING PLAN

SCALE 1"=40'
MTDB CONTRACT NO. BUS-443B
DRAWING NO. C10.4
SHEET NO. 7

JOB NUMBER 24990 R-14 FILE NAME 443B_GRDPAV_C10_4.DWG DATE: CONFORMED 5-21-99

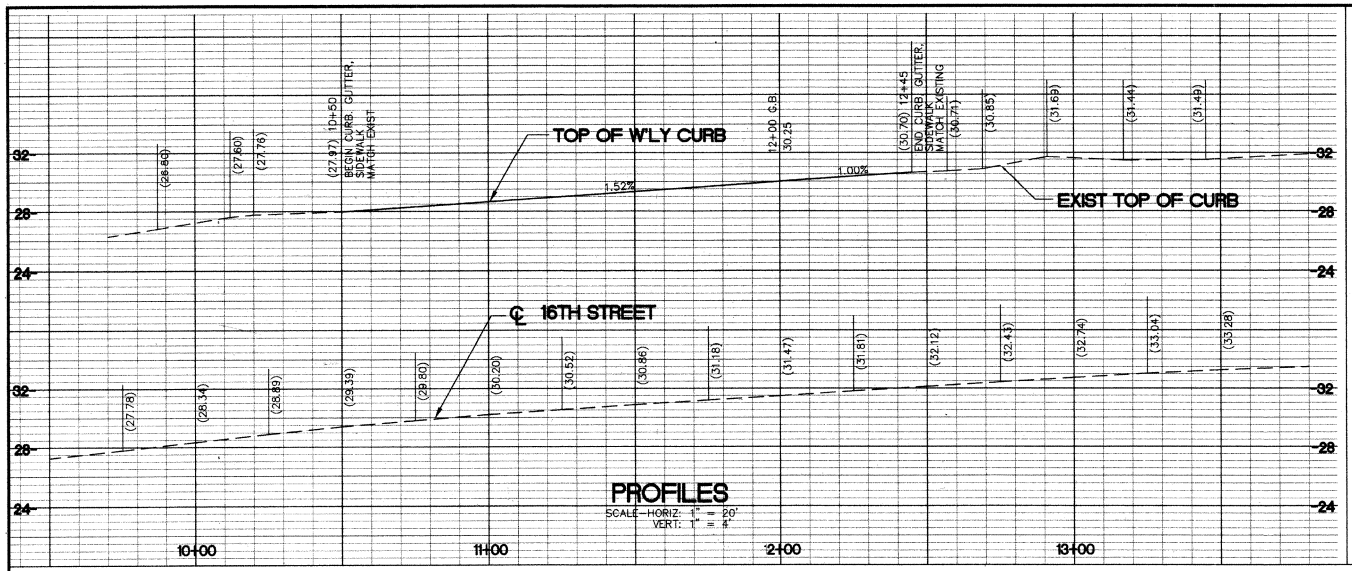

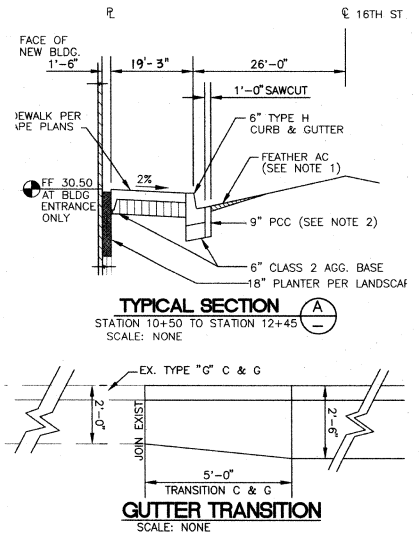

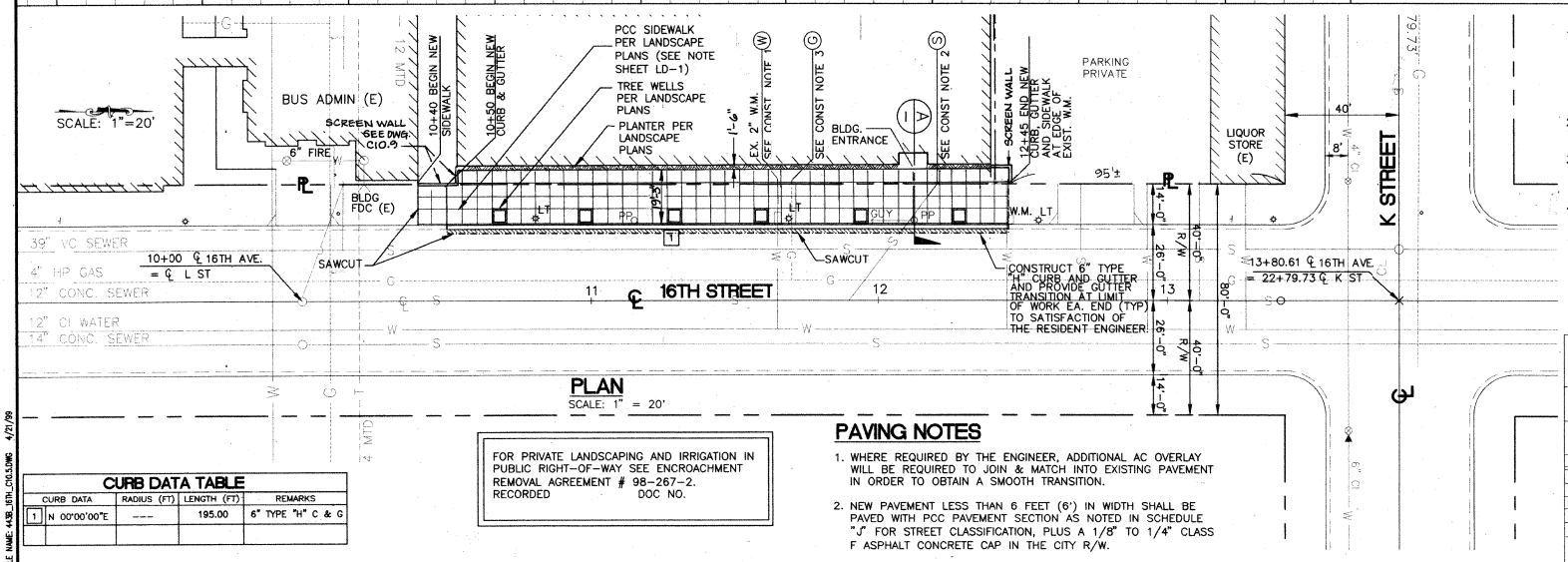

CONSTRUCTION NOTES

1. EXISTING 2" WATER METER & BACKFLOW DEVICE TO REMAIN. DISCONNECT AND REMOVE PRIVATE PIPELINE FROM CUSTOMER SIDE OF METER AND INSTALL NEW PRIVATE SERVICE TO NEW BUILDING PER PLUMBING PLANS.
2. EXISTING 4" SEWER LATERAL TO BE CAPPED AND ABANDONED AT PROPERTY LINE.
3. EXISTING GAS SERVICE SHALL BE PROTECTED FROM DAMAGE. SEE BUILDING PLUMBING PLANS FOR PIPE ROUTING TO NEW BUILDING.
4. SEE LANDSCAPE, PLANTING, AND IRRIGATION PLANS FOR SIDEWALK CONSTRUCTION DETAILS, JOINT PATTERN, SIDEWALK FINISH TREATMENT, TREEWELLS, PLANTING AND IRRIGATION WITHIN PUBLIC RIGHT-OF-WAY.

CURB DATA TABLE

	CURB DATA	RADIUS (FT)	LENGTH (FT)	REMARKS
1	N 00°00'00"E	---	195.00	6" TYPE "H" C & G

FOR PRIVATE LANDSCAPING AND IRRIGATION IN PUBLIC RIGHT-OF-WAY SEE ENCROACHMENT REMOVAL AGREEMENT # 98-267-2.
RECORDED DOC NO.

PAVING NOTES

1. WHERE REQUIRED BY THE ENGINEER, ADDITIONAL AC OVERLAY WILL BE REQUIRED TO JOIN & MATCH INTO EXISTING PAVEMENT IN ORDER TO OBTAIN A SMOOTH TRANSITION.
2. NEW PAVEMENT LESS THAN 6 FEET (6') IN WIDTH SHALL BE PAVED WITH PCC PAVEMENT SECTION AS NOTED IN SCHEDULE "J" FOR STREET CLASSIFICATION, PLUS A 1/8" TO 1/4" CLASS F ASPHALT CONCRETE CAP IN THE CITY R/W.

PRIVATE CONTRACT

IMPROVEMENT PLAN FOR:

16 TH STREET

SAN DIEGO TRANSIT, IMPERIAL AVE DIVISION - BUS MAINTENANCE FACILITY

CITY OF SAN DIEGO, CALIFORNIA
ENGINEERING DEPARTMENT
SHEET 3 OF 13 SHEETS

W.O. NO. 98-267 (037000)

4/99/99
FOR CITY ENGINEER — DATE

DESCRIPTION	BY	APPROVED	DATE	FILMED
ORIGINAL	EARTH TECH			SEP 20 99

1837-6283 NAD 83 COORDINATES

197-1723 LAMBERT COORDINATES

AS-BLT

CONTRACTOR C.E. WYLIE — DATE STARTED 5-15-1999
INSPECTOR SEVERINO MENDEZ — DATE COMPLETED 9-16-2000

29557-3-D DWG NO.

EARTH TECH
9675 BUSINESS PARK AVENUE SUITE 110, SAN DIEGO, CA. 92131
TEL: (858) 536-5610

REGISTERED PROFESSIONAL ENGINEER — STEPHEN D. MABEE — Exp. 3-31-00 — #25501 — STATE OF CALIFORNIA

	DATE
DESIGNED BY SDM	11/5/98
DRAWN BY LES	11/5/98
CHECKED BY KAG	11/5/98
MTDB PRJ. ENG. GPD	11/5/98

MTDB
Metropolitan Transit Development Board
1255 Imperial Avenue, Suite 1000, San Diego, Ca. 92101-7490 (619)231-1466

IMPERIAL AVENUE DIVISION
BUS MAINTENANCE FACILITY

16 TH STREET IMPROVEMENTS

SCALE 1"=20'
MTDB CONTRACT NO. BUS-443B
DRAWING NO. C10.5
SHEET NO. 8

JOB NUMBER 24690 R-R14 FILE NAME: 443B_16TH_C10.5.DWG 4/21/99

AS-BUILT

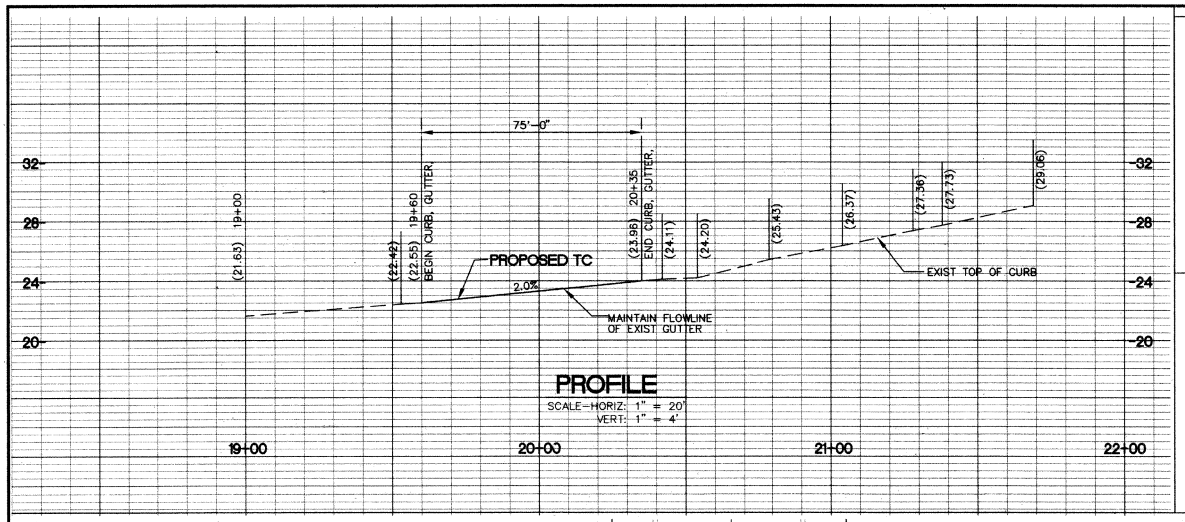

PROFILE

SCALE—HORIZ: 1" = 20'
VERT: 1" = 4'

NOTES:

1) WHERE REQUIRED BY THE CITY ENGINEER, ADDITIONAL AC OVERLAY WILL BE REQUIRED TO JOIN & MATCH INTO EXISTING PAVEMENT IN ORDER TO OBTAIN A SMOOTH TRANSITION.

2) NEW PAVEMENT LESS THAN 6 FEET (6') IN WIDTH SHALL BE PAVED WITH A PCC PAVEMENT SECTION AS NOTED IN SCHEDULE "J" FOR STREET CLASSIFICATION, PLUS A 1/8" TO 1/4' CLASS F ASPHALT CONCRETE CAP IN THE CITY R/W.

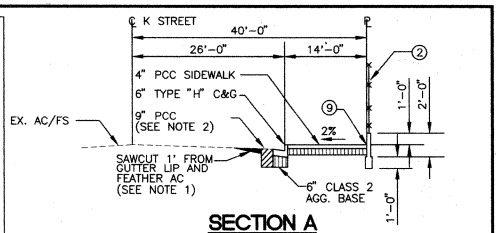

SECTION A

NO SCALE

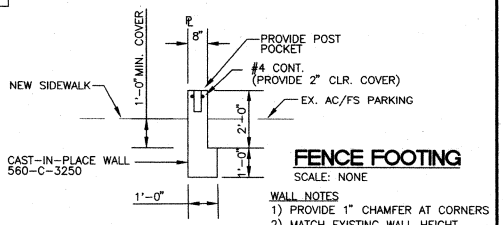

FENCE FOOTING

SCALE: NONE

WALL NOTES
1) PROVIDE 1" CHAMFER AT CORNERS
2) MATCH EXISTING WALL HEIGHT

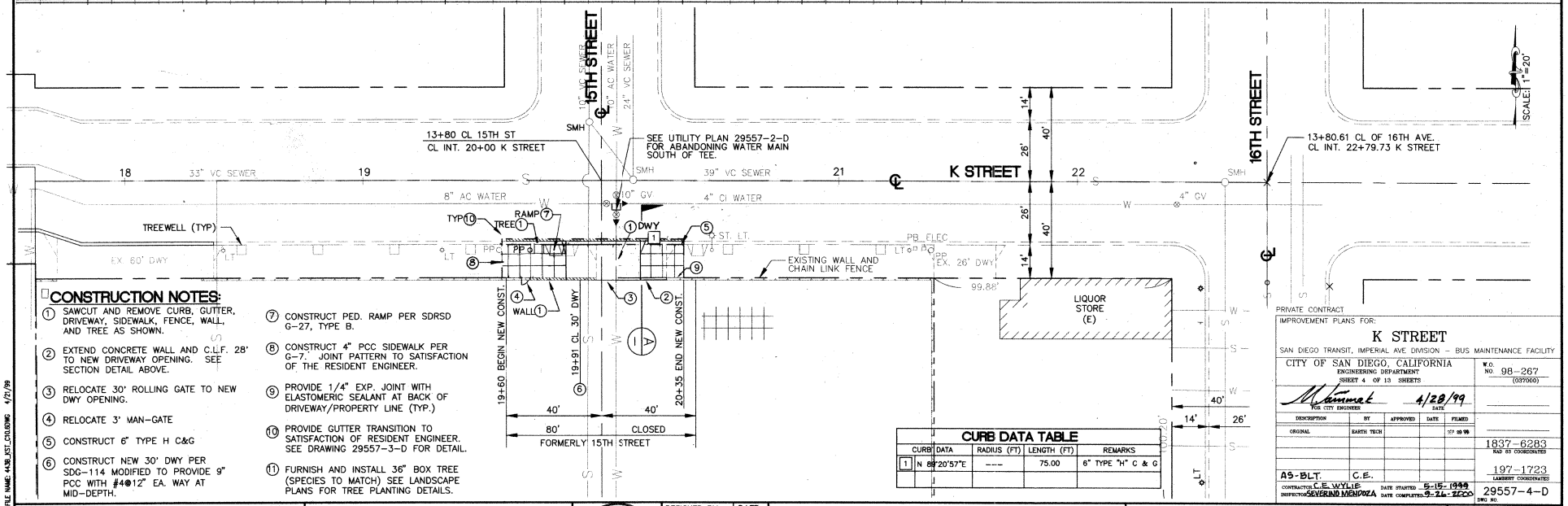

CONSTRUCTION NOTES:

1. SAWCUT AND REMOVE CURB, GUTTER, DRIVEWAY, SIDEWALK, FENCE, WALL, AND TREE AS SHOWN.
2. EXTEND CONCRETE WALL AND C.L.F. 28' TO NEW DRIVEWAY OPENING. SEE SECTION DETAIL ABOVE.
3. RELOCATE 30' ROLLING GATE TO NEW DWY OPENING.
4. RELOCATE 3' MAN-GATE
5. CONSTRUCT 6" TYPE H C&G
6. CONSTRUCT NEW 30' DWY PER SDG-114 MODIFIED TO PROVIDE 9" PCC WITH #4@12" EA. WAY AT MID-DEPTH.
7. CONSTRUCT PED. RAMP PER SDRSD G-27, TYPE B.
8. CONSTRUCT 4" PCC SIDEWALK PER G-7. JOINT PATTERN TO SATISFACTION OF THE RESIDENT ENGINEER.
9. PROVIDE 1/4" EXP. JOINT WITH ELASTOMERIC SEALANT AT BACK OF DRIVEWAY/PROPERTY LINE (TYP.)
10. PROVIDE GUTTER TRANSITION TO SATISFACTION OF RESIDENT ENGINEER. SEE DRAWING 29557-3-D FOR DETAIL.
11. FURNISH AND INSTALL 36" BOX TREE (SPECIES TO MATCH) SEE LANDSCAPE PLANS FOR TREE PLANTING DETAILS.

CURB DATA TABLE

	CURB DATA	RADIUS (FT)	LENGTH (FT)	REMARKS
1	N 88°20'57"E	---	75.00	6" TYPE "H" C & G

IMPROVEMENT PLANS FOR:

K STREET

SAN DIEGO TRANSIT, IMPERIAL AVE DIVISION – BUS MAINTENANCE FACILITY

CITY OF SAN DIEGO, CALIFORNIA
ENGINEERING DEPARTMENT
SHEET 4 OF 13 SHEETS

W.O. NO. 98-267 (037000)

FOR CITY ENGINEER — DATE 4/28/99

DESCRIPTION	BY	APPROVED	DATE	FILMED
ORIGINAL	EARTH TECH			5/22/99

1837-6283 NAD 83 COORDINATES

197-1723 LAMBERT COORDINATES

AS-BLT. C.E.

CONTRACTOR C.E. WYLIE — DATE STARTED 5-15-1999
INSPECTOR SEVERINO MENDOZA — DATE COMPLETED 9-24-2000

29557-4-D DWG NO.

EARTH TECH
9675 BUSINESS PARK AVENUE SUITE 110, SAN DIEGO, CA. 92131
TEL: (858) 536-5610

REGISTERED PROFESSIONAL ENGINEER — STEPHEN D. MARKEE — Exp. 3-31-00 — #2519 — STATE OF CALIFORNIA

	DATE
DESIGNED BY SDM	11/5/98
DRAWN BY LES	11/5/98
CHECKED BY KAG	11/5/98
MTDB PRJ. ENG. GPD	11/5/98

MTDB
Metropolitan Transit Development Board
1255 Imperial Avenue, Suite 1000, San Diego, Ca. 92101-7490 (619)231-1466

IMPERIAL AVENUE DIVISION
BUS MAINTENANCE FACILITY

K STREET IMPROVEMENTS

SCALE 1"=20'

MTDB CONTRACT NO. BUS-443B

DRAWING NO. C10.6 — SHEET NO. 9

JOB NUMBER: 24990 R-RH4 FILE NAME: 443B_IST_CIVILDWG 4/21/99

AS-BUILT

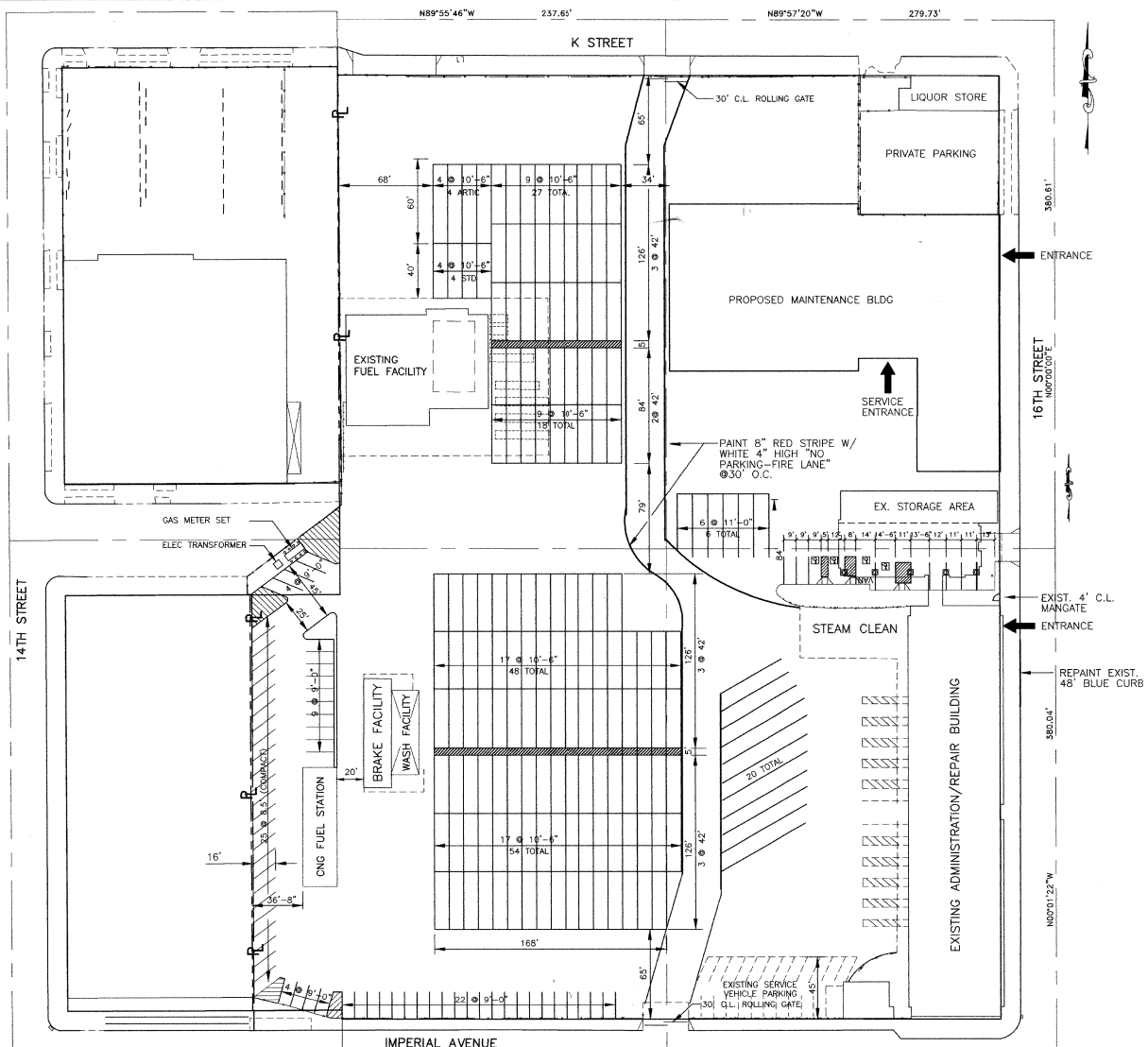

BUS PARKING SUMMARY	
TYPE	QUANTITY
BUS PARKING (40')	143
BAD ORDER BUSES	7
ARTICULATED BUS PARKING (60')	12
TOTAL BUS PARKING	162

VEHICLE PARKING SUMMARY	
TYPE	QUANTITY
STANDARD SPACES	46
COMPACT SPACES	25
TOTAL VEHICLE SPACES	71
PERCENTAGE STANDARD SPACES	35%
PERCENTAGE COMPACT SPACES	65%
DISABLED SPACES	4
SERVICE VEHICLES (EXISTING)	21

STRIPING NOTES

1. ALL STRIPING SHALL BE 4' WIDE WHITE LINES UNLESS OTHERWISE NOTED.
2. ALL DISABLED STRIPING AND MARKINGS SHALL COMPLY WITH SDRSD M-27A.
3. REMOVE AND REPLACE EXISTING DISABLED PARKING SIGNS. NEW SIGNS TO COMPLY WITH SDRSD M-28A. PROVIDE ONE "VAN ACCESSIBLE" SIGN PER M-28B.

AS-BUILT
Contract No. BUS-443B
Date NOV. 2000

CONSTRUCTION CHANGE TABLE		
CHANGE	DATE	SHEET NUMBERS REVISED OR ADDED THIS CHANGE

EARTH TECH
9675 BUSINESS PARK AVENUE SUITE 110, SAN DIEGO, CA. 92131
TEL: (619) 536-5610

REGISTERED PROFESSIONAL ENGINEER STEPHEN D. McNEIL Exp.3-31-00 42550 STATE OF CALIFORNIA

	DATE
DESIGNED BY SDM	7/98
DRAWN BY LES	7/98
CHECKED BY SDM	7/98
MTDB PRJ. ENG.	

MTDB
Metropolitan Transit Development Board
1255 Imperial Avenue, Suite 1000, San Diego, Ca. 92101-7490 (619)231-1466

IMPERIAL AVENUE DIVISION
BUS MAINTENANCE BUILDING

STRIPING PLAN

SCALE 1"=40'
MTDB CONTRACT NO. BUS-443B
DRAWING NO. C10.7
SHEET NO. 10

JOB NUMBER 24990 R-14 FILE NAME: 443B_STRIP_C10_7.DWG DATE: 12/28/98

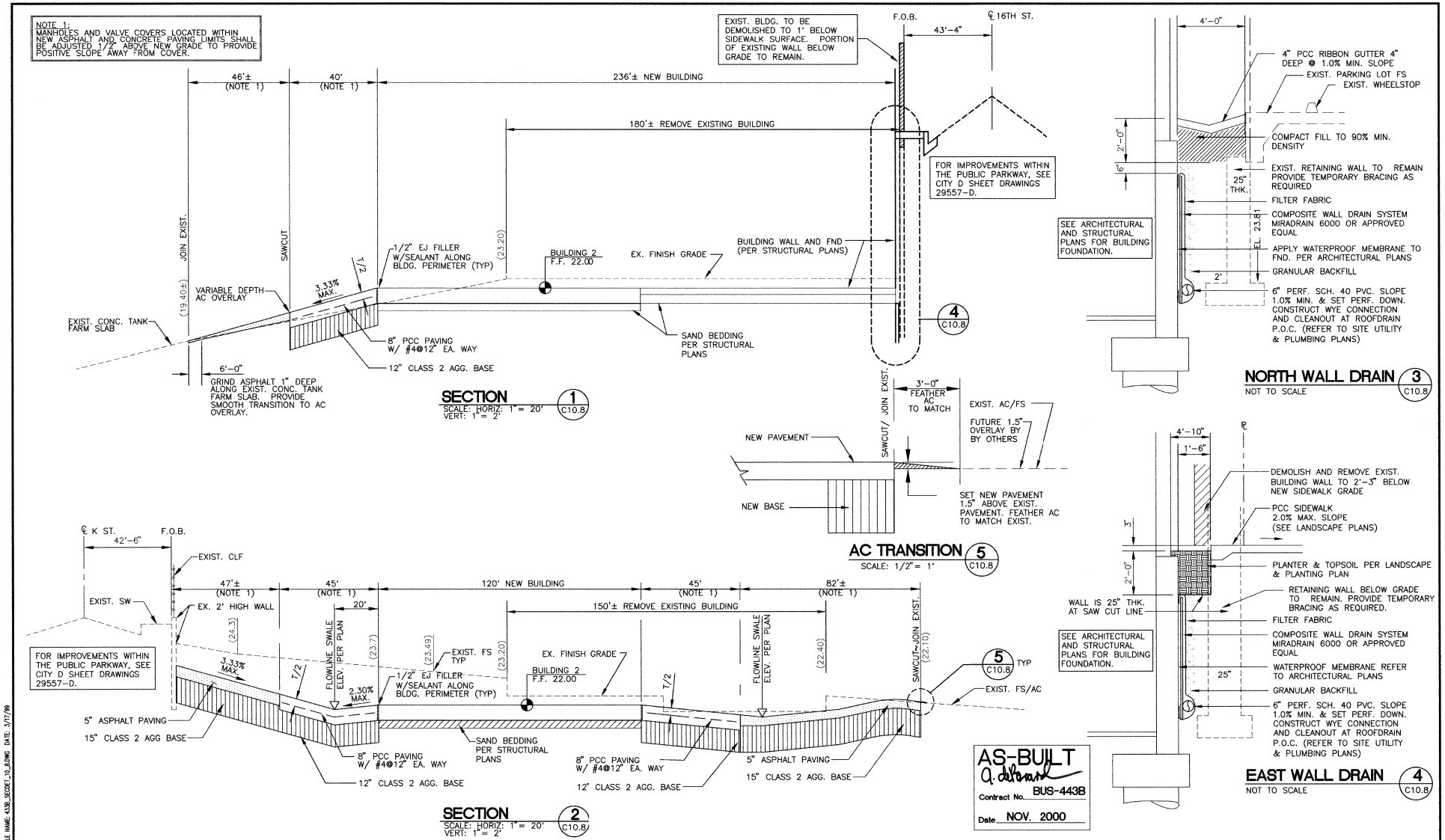

CONSTRUCTION CHANGE TABLE		
CHANGE	DATE	SHEET NUMBERS REVISED OR ADDED THIS CHANGE

EARTH TECH
9675 BUSINESS PARK AVENUE SUITE 110, SAN DIEGO, CA. 92131
TEL: (619) 536-5610

REGISTERED PROFESSIONAL ENGINEER — STEPHEN D. MCMAHEL — Exp. 3-31-00 — 42550 — STATE OF CALIFORNIA

		DATE
DESIGNED BY	SDM	7/98
DRAWN BY	LES/KMB	7/98
CHECKED BY	SDM	7/98
MTDB PRJ. ENG.		

MTDB
Metropolitan Transit Development Board
1255 Imperial Avenue, Suite 1000, San Diego, Ca. 92101-7490 (619)231-1466

IMPERIAL AVENUE DIVISION
BUS MAINTENANCE BUILDING

SECTIONS AND DETAILS

SCALE: AS NOTED
MTDB CONTRACT NO. BUS-443B
DRAWING NO. C10.8
SHEET NO. 11

JOB NUMBER 24990 R-14 FILE NAME: 443B_SECDET_10_ALONG DATE: 3/17/99

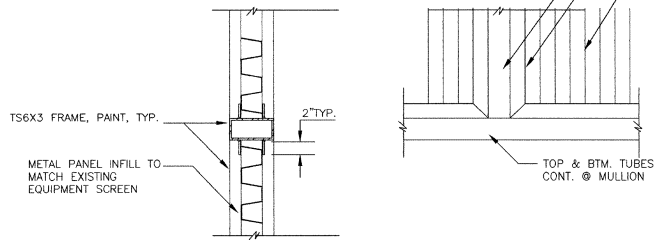

MULLION PLAN VIEW (JAMB SIMILAR) ELEVATION

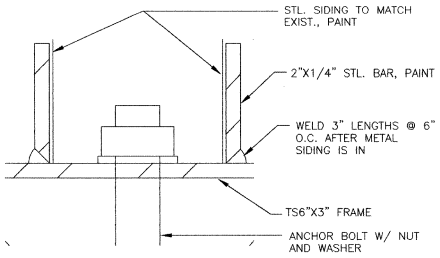

DETAIL 1

FULL SIZE

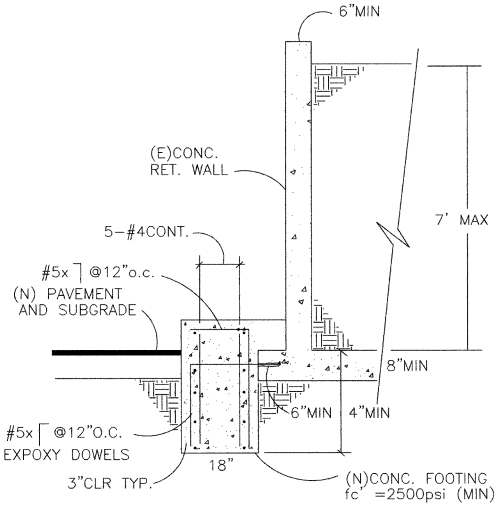

NOTE:

THIS BUTTRESS WALL IS LOCATED ON THE NORTH SIDE OF THE NEW BLDG. AND EAST SIDE ALONG THE LIQ. STORE PARKING LOT. DRAWING C10.4 SHEET 7.

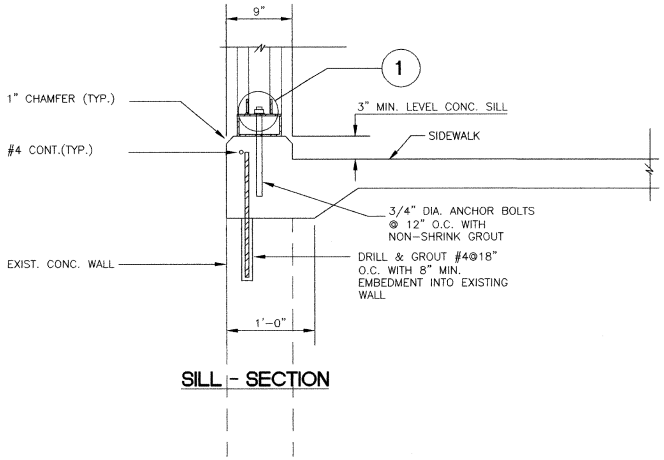

SILL - SECTION

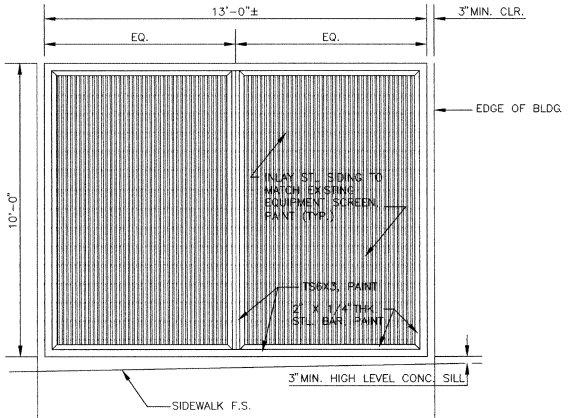

PARTIAL EAST ELEVATION

SCALE: 1/2"=1'-0"

AS-BUILT
Q. deBoard
Contract No. BUS-443B
Date NOV. 2000

NOTE:

SCREEN WALL SHOWN IS FOR INSTALLATION AND FABRICATION ONLY REF. DRAWING C10.5 SHEET 8, SHOWN IS A SCREEN WALL AT THE SOUTH END OF BLDG. 13'x5' PANEL AND THE NORTH END IS APPROX. 5'-4"x6'-10".

SCREEN WALL 1 / C10.9

SCALE: 1 1/2"=1'-0"

JOB NUMBER 24960 R-14 FILE NAME: 443B_SECDET_10_SLDWG DATE: NEW DWG PER ADDENDUM 6/21/99

CONSTRUCTION CHANGE TABLE		
CHANGE	DATE	SHEET NUMBERS REVISED OR ADDED THIS CHANGE
0	7/8/99	CONFORMED-NEW DRAWING C10.9 ADDED PER ADDENDUM

EARTH TECH
9675 BUSINESS PARK AVENUE SUITE 110, SAN DIEGO, CA. 92131
TEL: (619) 536-5610

REGISTERED PROFESSIONAL ENGINEER STEPHEN D. MARKE Exp.3-31-00 42550 STATE OF CALIFORNIA

		DATE
DESIGNED BY	SDM	6/99
DRAWN BY	SDM	6/99
CHECKED BY	GPD	6/99
MTDB PRJ. ENG.	GPD	

MTDB
Metropolitan Transit Development Board
1255 Imperial Avenue, Suite 1000, San Diego, Ca. 92101-7490 (619)231-1466

IMPERIAL AVENUE DIVISION
BUS MAINTENANCE BUILDING

SCREEN WALL
SECTIONS AND DETAILS

SCALE	AS NOTED
MTDB CONTRACT NO.	BUS-443B
DRAWING NO.	C10.9
SHEET NO.	12

ABBREVIATIONS

ABV	ABOVE
AC	ASPHALT CONCRETE
ACOUS	ACOUSTICAL
A.D.A.	AMERICANS WITH DISABILITIES ACT
AL	ALUMINUM
AP	ACCESS PANEL
APPROX	APPROXIMATELY
ARCH	ARCHITECT, (ARCHITECTURAL)
AFF	ABOVE FINISHED FLOOR
AT	ACOUSTICAL CEILING TILE
B – BET	BASE MATERIAL BETWEEN
BLDG	BUILDING
BLKG	BLOCKING
BM	BEAM
BOS	BOTTOM OF STEEL
BOT	BOTTOM
BW	BOTTOM OF WALL
BD	BOARD
CF	CUBIC FEET
CIP	CAST IRON PIPE
CL,℄	CENTERLINE
CLF	CHAIN LINK FENCE
CLG	CEILING
CLR	CLEAR, CLEARANCE
COL	COLUMN
CONC	CONCRETE
CONF	CONFERENCE
CONN	CONNECTION
CONSTR	CONSTRUCTION
CONT	CONTINUOUS, CONTINUE
CLJ	CONTROL JOINT
C TO C	CENTER TO CENTER
CM	CENTIMETER
CMU	CONCRETE MASONRY UNIT
CI	CAST IRON
DET	DETAIL
DIA	DIAMETER
DIAG	DIAGONAL
DIM	DIMENSION
DN	DOWN
DR	DOOR
DS	DOWN SPOUT
DWG(S)	DRAWING(S)
DW	DRIVEWAY
E	EAST
EA	EACH
EFC	EXPOSED FINISH CONCRETE
EJ	EXPANSION JOINT
EL	ELEVATION (HEIGHT)
ELEC	ELECTRIC,ELECTRICAL
ELEV	ELEVATOR
ENCL	ENCLOSURE
EP	ELECTRIC PNEUMATIC
EQ	EQUAL
EQPT	EQUIPMENT
ES	EXPOSED STRUCTURE
EW	EACH WAY
EXP	EXPANSION
(E),EXIST.	EXISTING
EMT	ELECTRICAL METALLIC TUBING
E.W.C	ELECTRIC WATER COOLER

F – F TO F	FUSE FACE TO FACE
F.D.	FLOOR DRAIN
F.E.C.	FIRE EXTINGUISHER CABINET
FIN	FINISHED, FINISH
FIN GR	FINISH GR
FL	FLOW LINE
FLUOR	FLUORESCENT
FOC	FACE OF CONCRETE
FS	FEDERAL SPECIFICATION
FIN FL	FINISHED FLOOR
F.H.	FIRE HYDRANT
G	GROUND WIRE
GA	GAGE, GAUGE
GEN	GENERATOR
GALV	GALVANIZED
GR	GRADE
GRTG	GRATING
GB	GYPSUM WALLBOARD
HORIZ	HORIZONTAL
HR	HOUR
HT	HEIGHT
HM	HOLLOW METAL
ID	INSIDE DIAMETER
IN	INCH, INCHES
INFO	INFORMATION
INTR	INTERIOR
INV	INVERT
JT	JOINT
KOP	KNOCK OUT PANEL
L	LONG
LG	LENGTH
LLV	LONG LEG VERTICAL
LONG	LONGITUDINAL
LVL	LEVEL
LPT	LOW POINT
LTG	LIGHTING
MATL	MATERIAL, MATERIALS
MAX	MAXIMUM
MECH.	MECHANICAL
MH	MANHOLE
MFR	MANUFACTURER
MIN	MINIMUM
MISC	MISCELLANEOUS
M.O.	MASONRY OPENING
MTG	MOUNTING
MTL	METAL
N	NORTH
N/A	NOT APPLICABLE
N.I.C	NOT IN CONTRACT
NO	NUMBER
NOM	NOMINAL
NTS	NOT TO SCALE
OC	ON CENTER
OD	OUTSIDE DIAMETER
OPER	OPERATOR
OPNG	OPENING
OPP	OPPOSITE
P.A.	PLANTER AREA
PCC	PORTLAND CONCRETE CEMENT
PL,℄	PLATE
PLATF(S)	PLATFORM(S)
PP	POWER POLE
P.L.	PROPERTY LINE
PLUMB.	PLUMBING
PS	POINT OF SWITCH
PA	PUBLIC ADDRESS
PNT	PAINT

R	RADIUS,RISER
REC	RECESSED
RE:	REFER
REF	REFERENCE
REINF	REINFORCE REINFORCED
REQD	REQUIRED
REV	REVISION
RR	RAIL ROAD
ROW	RIGHT OF WAY
S	SOUTH
SURF	SURFACE
SCHED	SCHEDULE
SECT	SECTION
SHT	SHEET
SIG	SIGNAL LINE
SIM	SIMILAR
SM	SHEET METAL
SPEC	SPECIFICATION(S)
SQ	SQUARE
SST	STAINLESS STEEL
STD	STANDARD
STL	STEEL
STOR	STORAGE
STRUCT	STRUCTURE
SUSP	SUSPENDED
SYS	SYSTEM
SMS	SHEET METAL SCREWS
T.C.	TOP OF CURB
TD	TOP OF DECK
TEL	TELEPHONE
TEMP	TEMPORARY
TG	TOP OF GRADE
THK	THICK, THICKNESS
TK	TRACK
TOC	TOP OF CURB
T.O.M.	TOP OF MASONRY
T.O.P.	TOP OF PARAPET
T.O.S.	TOP OF STEEL
T.O.R.	TOP OF RAIL
TP	TOP OF PLATFORM
TYP.	TYPICAL
T.PAV	TOP OF PAVEMENT
TS	TUBE STEEL
UON	UNLESS OTHERWISE NOTED
UBC	UNIFORM BUILDING CODE
VENT	VENTILATION
VERT	VERTICAL
VCP	VITRIFIED CLAY PIPE
W	WEST
W/	WITH
W/O	WITHOUT
WP	WORK POINT
WT	WEIGHT
W/R	WATER RESISTANT

MISCELLANEOUS

&	AND
@	AT
ø	DIAMETER
∠	ANGLE

GENERAL SYMBOLS

- (A) — COLUMN GRID BUBBLE
- (10) — DOOR NUMBER
- 1 / A20.20 TYP. — SECTION CUT: TOP– SECTION IDENTIFICATION NO. BOTTOM– DRAWING ON WHICH SECTION IS DRAWN OUTSIDE– OPTIONAL ANNOTATIONS
- W / A — WINDOW TYPE
- L / A — LOUVER TYPE
- 1 — PARTITION TYPE
- 2 / A50.2 — INTERIOR ELEVATION: TOP– ELEVATION IDENTIFICATION NO. BOTTOM– DRAWING ON WHICH ELEVATION IS DRAWN
- AL / 1 — EQUIPMENT TYPE
- NORTH SYMBOL
- 1 / A40.01 TYP. — DETAIL INDICATION: TOP– DETAIL OR ASSEMBLY IDENTIFICATION NO. BOTTOM– DRAWING ON WHICH DETAIL IS DRAWN
- CENTERLINE/COLUMN GRID LINE
- MATCH LINE
- LIMIT OF CONTRACT
- ELEVATION DATUM POINT AND/OR WORK POINT
- EARTH
- CONCRETE
- CONCRETE MASONRY UNIT
- STEEL
- REVISION CLOUD
- REVISION DELTA
- FEC — FIRE EXTINGUISHER CABINET

DETAIL NAME
1/4"=1'-0"
8 / A10.08
DETAIL SECTION TITLE
TOP– DETAIL OR ASSEMBLY IDENTIFICATION NO.
BOTTOM RIGHT– DRAWING ON WHICH DETAIL IS DRAWN
BOTTOM LEFT – SCALE

FIRE DEPARTMENT NOTES

1. ALL REQUIRED PERMITS MUST BE OBTAINED FROM THE FIRE PREVENTION BUREAU BEFORE THE BUILDING IS OCCUPIED.
2. COMPLETE PLANS AND SPECIFICATIONS FOR SPRINKLER SYSTEM OR FIRE ALARM SYSTEM MUST BE SUBMITTED TO, AND APPROVED BY, THE FIRE PREVENTION BUREAU BEFORE THESE EQUIPMENT IS INSTALLED.
3. THE INSTALLATION OF AUTOMATIC FIRE SPRINKLER SYSTEMS SHALL COMPLY WITH THE U.B.C. STANDARD NO. 9–1.
4. ALL SPRINKLER AND STANDPIPE WORK SHALL BE DONE BY A LICENSED FIRE SPRINKLER CONTRACTOR.
5. ALL FIRE HYDRANTS SHALL BE PROPERLY PROTECTED WITH APPROVED BARRICADES.
6. FIRE DEPARTMENT CONNECTIONS SHALL BE PROVIDED WITH APPROVED SIGNAGE PER CITY OF SAN DIEGO FIRE CODE REQUIREMENTS.
7. PROVIDE FIRE DEPARTMENT LOCK BOX.
8. PROVIDE A MINIMUM OF ONE PORTABLE FIRE EXTINGUISHERS WITH 2A10BC CLASSIFICATION WITHIN 75 FEET TRAVEL DISTANCE FOR EACH 6,000 SQUARE FEET OR PORTION THERE OF ON EACH FLOOR.
9. PROVIDE AT LEAST ONE FIRE EXTINGUISHER WITH A MINIMUM U.L. RATING OF 4–A:40–B:C WITHIN 30 FEET TRAVEL DISTANCE OF THE PAINT SPRAY BOOTH.
10. BUILDING NUMBERS SHALL BE EASILY VISIBLE AND LEGIBLE FROM THE STREET OR ROAD FRONTING THE PROPERTY.
11. THE CONSTRUCTION, REMODEL, OR DEMOLITION OF A BUILDING SHALL COMPLY WITH U.F.C. ARTICLE 87.
12. COMPLETE PLANS AND SPECIFICATIONS FOR PAINT SPRAY BOOTH SHALL BE SUBMITTED FOR REVIEW AND APPROVAL PRIOR TO SYSTEM INSTALLATION.

GENERAL NOTES

1. NO DEVIATION FROM CONTRACT DRAWINGS OR SPECIFICATIONS SHALL BE MADE WITHOUT WRITTEN APPROVAL FROM MTDB.
2. VERIFY ALL EXISTING CONDITIONS, SCOPE OF WORK, ELEVATIONS (FLOOR, CEILING, ROOF, ETC.) AND DIMENSIONS, AT THE JOB SITE BEFORE PROCEEDING WITH THE WORK.
3. GENERAL CONTRACTOR SHALL CAREFULLY STUDY AND COMPARE THE CONTRACT DOCUMENTS PRIOR TO CONSTRUCTION AND SHALL REPORT TO MTDB ENGINEER ANY ERROR, INCONSISTENCY OR OMISSION HE MAY DISCOVER AND SHALL NOT PROCEED WITH THE WORK UNTIL THE INTENT OF THE DOCUMENT IS VERIFIED BY MTDB ENGINEER. CONTRACTOR'S COMMENCING WITH THE WORK IMPLIES ACCEPTANCE OF ALL SURFACES AND CONDITIONS.
4. IF THE GENERAL CONTRACTOR PERFORMS OR PROCEEDS WITH ANY WORK CONTRARY TO APPLICABLE LAWS, ORDINANCES, RULES AND REGULATIONS WITHOUT GIVING PRIOR WRITTEN NOTICE TO THE MTDB ENGINEER, HE SHALL ASSUME FULL RESPONSIBILITY THEREOF AND SHALL BEAR ALL COSTS ATTRIBUTABLE THERETO.
5. DIMENSIONS
   (A) ALL DIMENSIONS SHALL BE VERIFIED IN THE FIELD
   (B) DIMENSIONS SHOWN ON FLOOR PLANS ARE TYPICALLY TO CENTER LINE OF COLUMNS OR FACE OF STUDS, CONCRETE OR MASONRY UNLESS NOTED OTHERWISE.
   (C) DO NOT SCALE DRAWINGS
6. WORK SHALL CONFORM TO ALL LOCAL, STATE, AND FEDERAL CODES AND ORDINANCES IN EFFECT. ALL SAFETY PROVISIONS SHALL BE STRICTLY ADHERED TO IN EVERY DETAIL. THE CONTRACTOR SHALL PROVIDE AND MAINTAIN PROPER BARRICADES, RAILINGS, GUARDS, LIGHTS, OR ANY OTHER TEMPORARY DEVICES NECESSARY FOR THE PROTECTION OF LIFE AND PROPERTY.
7. INTERIOR WALL AND CEILING FINISHES SHALL NOT EXCEED A FLAME–SPEED CLASSIFICATION OF 25 (CLASS A).
8. ALL DISSIMILAR METALS SHALL BE EFFECTIVELY ISOLATED FROM EACH OTHER TO PREVENT MOLECULAR BREAKDOWN. (GALVANIC ACTION).
9. WHERE SPECIFIC CONDITION IS DETAILED, IT SHALL BE UNDERSTOOD THAT ALL LIKE OR SIMILAR CONDITIONS ARE THE SAME UNLESS SPECIFICALLY NOTED OR DETAILED OTHERWISE.
10. LARGER SCALE DETAIL DRAWINGS TAKE PRECEDENCE OVER SMALLER SCALE DETAIL DRAWINGS.
11. CONTRACTOR SHALL COORDINATE WITH ALL EQUIPMENT MANUFACTURERS FOR EQUIPMENT ROUGH–IN REQUIREMENTS.
12. PROVIDE APPROVED WALL BACKING FOR ALL WALL HUNG EQUIPMENT AND CABINETS.
13. PROVIDE AND INSTALL ACCESS PANELS, SIZES AS REQUIRED AT ALL CONCEALED MECHANICAL AND PLUMBING ITEMS WHICH REQUIRE SERVICE OR ACCESS, VALVES, FIRE DAMPERS, BALANCING DAMPERS, DUCT HEATERS, ETC. ACCESS PANELS IN RATED CEILINGS AND PARTITIONS SHALL HAVE THE APPROPRIATE U.L. LABEL.
14. THE GENERAL CONTRACTOR SHALL MAKE SPECIAL PROVISIONS FOR DUST AND NOISE CONTROL AND SAFETY PRECAUTIONS DURING CONSTRUCTION.
15. GENERAL CONTRACTOR SHALL COORDINATE LOCATION OF STAGING AREA WITH THE MTDB ENGINEER.

AS–BUILT
Contract No BUS–443B
Date NOV. 2000

CONSTRUCTION CHANGE TABLE

CHANGE	DATE	SHEET NUMBERS REVISED OR ADDED THIS CHANGE

STV Incorporated
ENGINEERS/ARCHITECTS/PLANNERS/CONSTRUCTION MANAGERS
1055 WILSHIRE BOULEVARD, SUITE 1455
LOS ANGELES, CALIFORNIA 90017–2499

LICENSED ARCHITECT — RAY SOO K. WU — C–24485 — RENEWAL DATE — STATE OF CALIFORNIA

DESIGNED BY	DATE
DRAWN BY	
CHECKED BY M. Fernandes	12/17/98
MTDB PRJ. ENG.	

MTDB
Metropolitan Transit Development Board
1255 Imperial Avenue, Suite 1000, San Diego, Ca. 92101–7490 (619)231–1456

IMPERIAL AVENUE DIVISION
BUS MAINTENANCE FACILITY

GENERAL NOTES, SYMBOLS, AND ABBREVIATIONS

SCALE	NO SCALE
MTDB CONTRACT NO.	BUS–443B
DRAWING NO.	A10.1
SHEET NO.	13

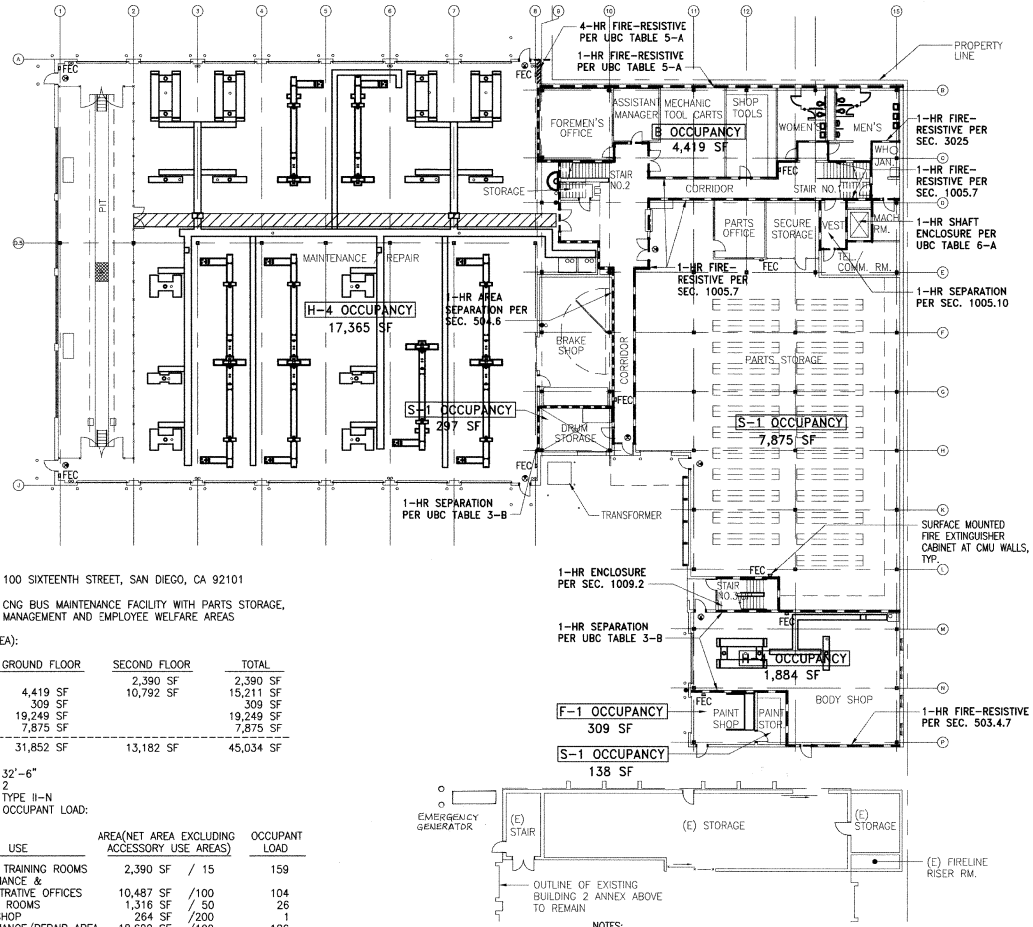

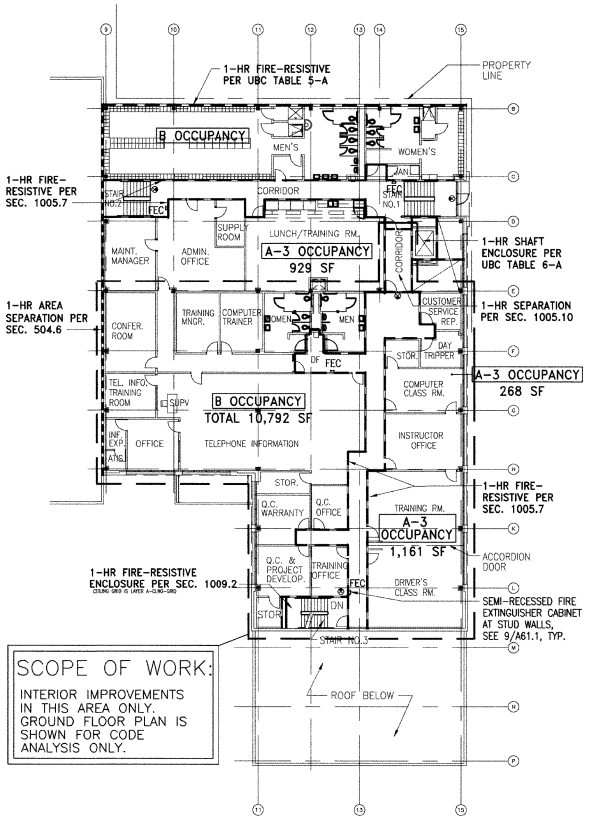

PROJECT DATA:

PROJECT ADDRESS: 100 SIXTEENTH STREET, SAN DIEGO, CA 92101

USE: CNG BUS MAINTENANCE FACILITY WITH PARTS STORAGE, MANAGEMENT AND EMPLOYEE WELFARE AREAS

BUILDING AREA (GROSS AREA):

	GROUND FLOOR	SECOND FLOOR	TOTAL
A-3		2,390 SF	2,390 SF
B	4,419 SF	10,792 SF	15,211 SF
F-1	309 SF		309 SF
H-4	19,249 SF		19,249 SF
S-1	7,875 SF		7,875 SF
TOTAL AREA	31,852 SF	13,182 SF	45,034 SF

BUILDING HEIGHT: 32'-6"
NUMBER OF STORIES: 2
CONSTRUCTION TYPE: TYPE II-N
BUILDING OCCUPANCY AND OCCUPANT LOAD:

	USE	AREA(NET AREA EXCLUDING ACCESSORY USE AREAS)		OCCUPANT LOAD
A-3	LUNCH, TRAINING ROOMS	2,390 SF	/ 15	159
B	MAINTENANCE & ADMINISTRATIVE OFFICES	10,487 SF	/100	104
B	LOCKER ROOMS	1,316 SF	/ 50	26
F-1	PAINT SHOP	264 SF	/200	1
H-4	MAINTENANCE/REPAIR AREA	18,622 SF	/100	186
S-1	DRUM, PARTS & PAINT STORAGES	7,408 SF	/300	24
TOTAL OCCUPANT LOAD:				500

ALLOWABLE FLOOR AREA (W/ AUTOMATIC SPRINKLER SYSTEM):

A-3	9,100 SF x 200% =	18,200 SF
B	12,000 SF x 200% =	24,000 SF
F-1	12,000 SF x 200% =	24,000 SF
H-4	7,500 SF x 300% =	22,500 SF
	7,500 SF x 100% =	7,500 SF (SEPARATION ON THREE SIDES)
		30,000 SF
S-1	18,000 SF x 200% =	36,000 SF
TOTAL ALLOWABLE AREA		132,200 SF

NOTES:

1. PROVIDE 1-HR RATED SPRAY-ON FIREPROOFING ON ALL COLUMNS AND JOISTS IN BRAKE SHOP AND PART OF MAINTENANCE / REPAIR SHOP AS SHOWN HATCHED ON PLAN.
2. FIRE SRINKLER CONTRACTOR TO PROVIDE FIRE SPRINKLER SYSTEM THROUGHOUT ENTIRE BUILDING. SEE PLUMBING DRAWINGS FOR EXISTING FIRE SPRINKLER MAIN LOCATION.

GROUND FLOOR PLAN 1/16"=1'-0" (1 / A10.2)

SECOND FLOOR PLAN 1/16"=1'-0" (2 / A10.2)

SCOPE OF WORK:

INTERIOR IMPROVEMENTS IN THIS AREA ONLY. GROUND FLOOR PLAN IS SHOWN FOR CODE ANALYSIS ONLY.

LEGEND:

- ONE-HOUR FIRE-RESISTIVE AREA SEPARATION
- ONE-HOUR FIRE-RESISTIVE CONSTRUCTION
- FOUR-HOUR FIRE-RESISTIVE CONSTRUCTION
- FEC FIRE EXTINGUISHER CABINET
- EXIT SIGN

DESIGN CRITERIA

THE BUILDING WORK ON THIS PROJECT HAS BEEN DESIGNED TO CONFORM TO THE 1994 UBC AS AMENDED BY THE 1995 TITLE 24 CALIFORNIA BUILDING STANDARD CODE.

AS-BUILT
Contract No. BUS-443B
Date NOV. 2000

CONSTRUCTION CHANGE TABLE

CHANGE	DATE	SHEET NUMBERS REVISED OR ADDED THIS CHANGE
1	6/28/99	ADDENDUM NO. 1
2	9/22/99	FIREPROOFING CLARIFICATION
4	4/17/00	SECOND FLOOR INTERIOR IMPROVEMENTS

STV Incorporated
ENGINEERS/ARCHITECTS/PLANNERS/CONSTRUCTION MANAGERS
1050 WILSHIRE BOULEVARD, SUITE 1455
LOS ANGELES, CALIFORNIA 90017-2489

LICENSED ARCHITECT KIM SOO K. KIM C-24485 RENEWAL DATE STATE OF CALIFORNIA

		DATE
DESIGNED BY	K. Kim	4/17/00
DRAWN BY	S. Escobar	4/17/00
CHECKED BY	M. Fernandes	4/17/00
MTDB PRJ. ENG.		

MTDB
Metropolitan Transit Development Board
1255 Imperial Avenue, Suite 1000, San Diego, Ca. 92101-7490 (619)231-1466

IMPERIAL AVENUE DIVISION
BUS MAINTENANCE FACILITY

CODE ANALYSIS/FLOOR PLANS

SCALE	1/16"=1'-0"
MTDB CONTRACT NO.	BUS-443B
DRAWING NO.	A10.2
SHEET NO.	14

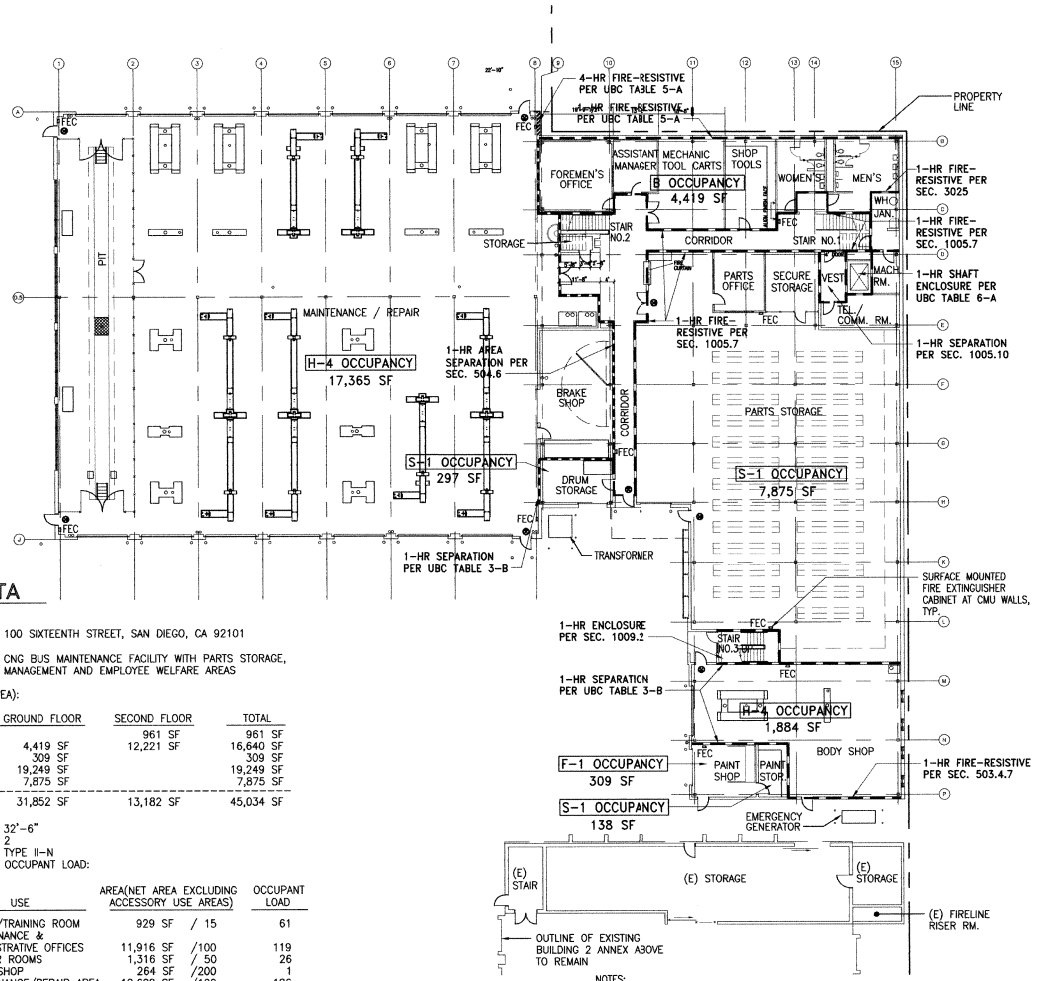

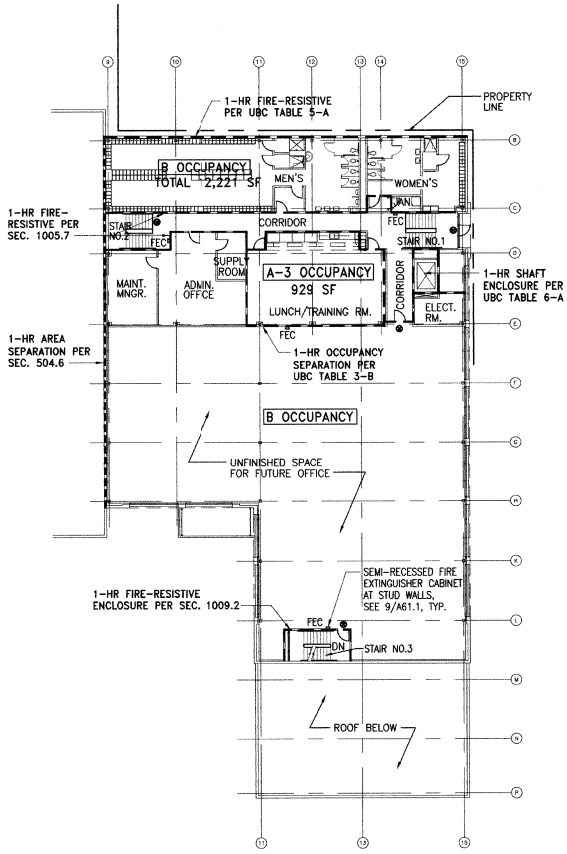

PROJECT DATA

PROJECT ADDRESS: 100 SIXTEENTH STREET, SAN DIEGO, CA 92101

USE: CNG BUS MAINTENANCE FACILITY WITH PARTS STORAGE, MANAGEMENT AND EMPLOYEE WELFARE AREAS

BUILDING AREA (GROSS AREA):

	GROUND FLOOR	SECOND FLOOR	TOTAL
A-3		961 SF	961 SF
B	4,419 SF	12,221 SF	16,640 SF
F-1	309 SF		309 SF
H-4	19,249 SF		19,249 SF
S-1	7,875 SF		7,875 SF
TOTAL AREA	31,852 SF	13,182 SF	45,034 SF

BUILDING HEIGHT: 32'-6"
NUMBER OF STORIES: 2
CONSTRUCTION TYPE: TYPE II-N
BUILDING OCCUPANCY AND OCCUPANT LOAD:

	USE	AREA(NET AREA EXCLUDING ACCESSORY USE AREAS)		OCCUPANT LOAD
A-3	LUNCH/TRAINING ROOM	929 SF	/ 15	61
B	MAINTENANCE & ADMINISTRATIVE OFFICES	11,916 SF	/100	119
B	LOCKER ROOMS	1,316 SF	/ 50	26
F-1	PAINT SHOP	264 SF	/200	1
H-4	MAINTENANCE/REPAIR AREA	18,622 SF	/100	186
S-1	DRUM, PARTS & PAINT STORAGES	7,408 SF	/300	24
TOTAL OCCUPANT LOAD:				488

ALLOWABLE FLOOR AREA (W/ AUTOMATIC SPRINKLER SYSTEM):

A-3	9,100 SF x 200% =	18,200 SF
B	12,000 SF x 200% =	24,000 SF
F-1	12,000 SF x 200% =	24,000 SF
H-4	7,500 SF x 300% =	22,500 SF
	7,500 SF x 100% =	7,500 SF (SEPARATION ON THREE SIDES)
		30,000 SF
S-1	18,000 SF x 200% =	36,000 SF
TOTAL ALLOWABLE AREA		132,200 SF

NOTES:

1. PROVIDE 1-HR RATED SPRAY-ON FIREPROOFING ON ALL EXPOSED COLUMNS AND JOISTS IN BRAKE SHOP, DRUM STORAGE, PARTS STORAGE, PARTS OFFICE, AND SECURE STORAGE.
2. FIRE SRINKLER CONTRACTOR TO PROVIDE FIRE SPRINKLER SYSTEM THROUGHOUT ENTIRE BUILDING. SEE P.LUMBING DRAWINGS FOR EXISTING FIRE SPRINKLER MAIN LOCATION.

GROUND FLOOR PLAN 1/16"=1'-0" (1 / A10.2)

SECOND FLOOR PLAN 1/16"=1'-0" (2 / A10.2)

AS-BUILT
Q. deferrari
Contract No. BUS-443B
Date NOV. 2000

LEGEND

- ONE-HOUR FIRE-RESISTIVE AREA SEPARATION
- ONE-HOUR FIRE-RESISTIVE CONSTRUCTION
- FOUR-HOUR FIRE-RESISTIVE CONSTRUCTION
- FEC FIRE EXTINGUISHER CABINET
- EXIT SIGN

DESIGN CRITERIA

THE BUILDING WORK ON THIS PROJECT HAS BEEN DESIGNED TO CONFORM TO THE 1994 UBC AS AMENDED BY THE 1995 TITLE 24 CALIFORNIA BUILDING STANDARD CODE.

CONSTRUCTION CHANGE TABLE

CHANGE	DATE	SHEET NUMBERS REVISED OR ADDED THIS CHANGE
1	6/28/99	ADDENDUM NO. 1

STV Incorporated
ENGINEERS/ARCHITECTS/PLANNERS/CONSTRUCTION MANAGERS
1055 WILSHIRE BOULEVARD, SUITE 1455
LOS ANGELES, CALIFORNIA 90017-2499

LICENSED ARCHITECT C-24485 RENEWAL DATE STATE OF CALIFORNIA

DESIGNED BY	K. Kim	12/17/98
DRAWN BY	S. Escobar	12/17/98
CHECKED BY	M. Fernandes	12/17/98
MTDB PRJ. ENG.		

MTDB
Metropolitan Transit Development Board
1255 Imperial Avenue, Suite 1000, San Diego, Ca. 92101-7490 (619)231-1466

IMPERIAL AVENUE DIVISION
BUS MAINTENANCE FACILITY

CODE ANALYSIS/FLOOR PLANS

SCALE	1/16"=1'-0"
MTDB CONTRACT NO.	BUS-443B
DRAWING NO.	A10.2
SHEET NO.	14

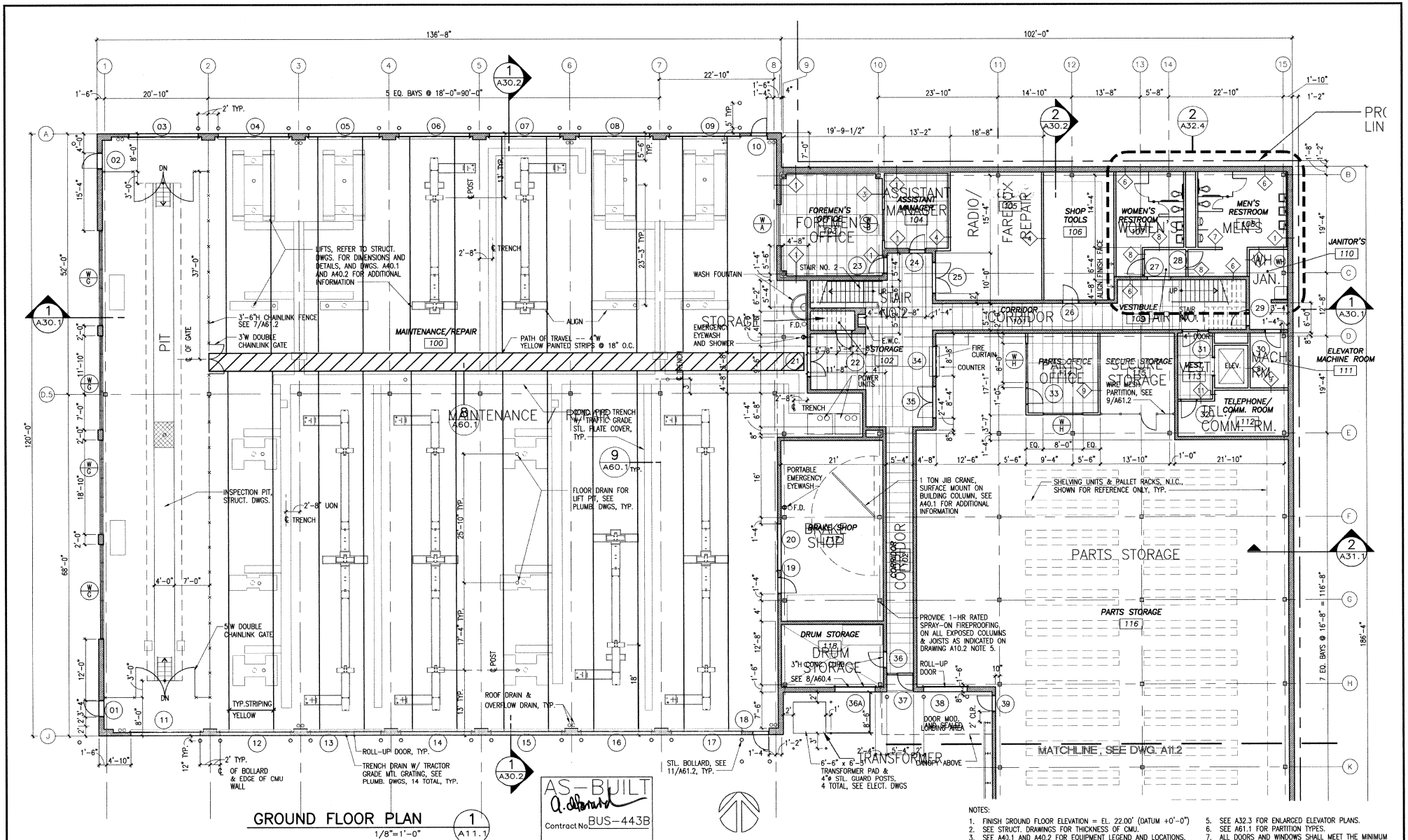

GROUND FLOOR PLAN 1/A11.1
1/8"=1'-0"

AS-BUILT
Contract No. BUS-443B
Date NOV. 2000

NOTES:
1. FINISH GROUND FLOOR ELEVATION = EL. 22.00' (DATUM +0'-0")
2. SEE STRUCT. DRAWINGS FOR THICKNESS OF CMU.
3. SEE A40.1 AND A40.2 FOR EQUIPMENT LEGEND AND LOCATIONS.
4. SEE A32.1 FOR ENLARGED STAIR PLANS.
5. SEE A32.3 FOR ENLARGED ELEVATOR PLANS.
6. SEE A61.1 FOR PARTITION TYPES.
7. ALL DOORS AND WINDOWS SHALL MEET THE MINIMUM INFILTRATION REQUIREMENTS PER SECTION 116 E.E.S.

CONSTRUCTION CHANGE TABLE		
CHANGE	DATE	SHEET NUMBERS REVISED OR ADDED THIS CHANGE

STV Incorporated
ENGINEERS/ARCHITECTS/PLANNERS/CONSTRUCTION MANAGERS
1055 WILSHIRE BOULEVARD, SUITE 1455
LOS ANGELES, CALIFORNIA 90017-2499

LICENSED ARCHITECT FOR SOO KIM C-24485 REGISTERED DATE STATE OF CALIFORNIA

		DATE
DESIGNED BY	K. Kim	12/17/98
DRAWN BY	S. Escobar	12/17/98
CHECKED BY	M. Fernandes	12/17/98
MTDB PRJ. ENG.		

MTDB
Metropolitan Transit Development Board
1255 Imperial Avenue, Suite 1000, San Diego, Ca. 92101-7490 (619)231-1466

IMPERIAL AVENUE DIVISION
BUS MAINTENANCE FACILITY

GROUND FLOOR PLAN

SCALE 1/8"=1'-0"
MTDB CONTRACT NO. BUS-443B
DRAWING NO. A11.1
SHEET NO. 15

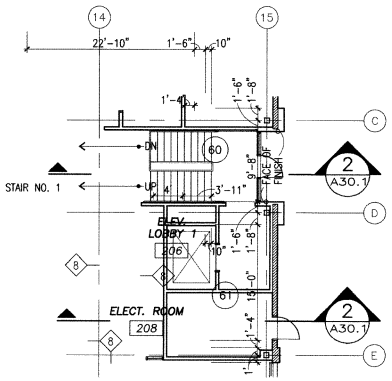

STREET LEVEL FLOOR PLAN

1/8"=1'-0"

2 / A11.2

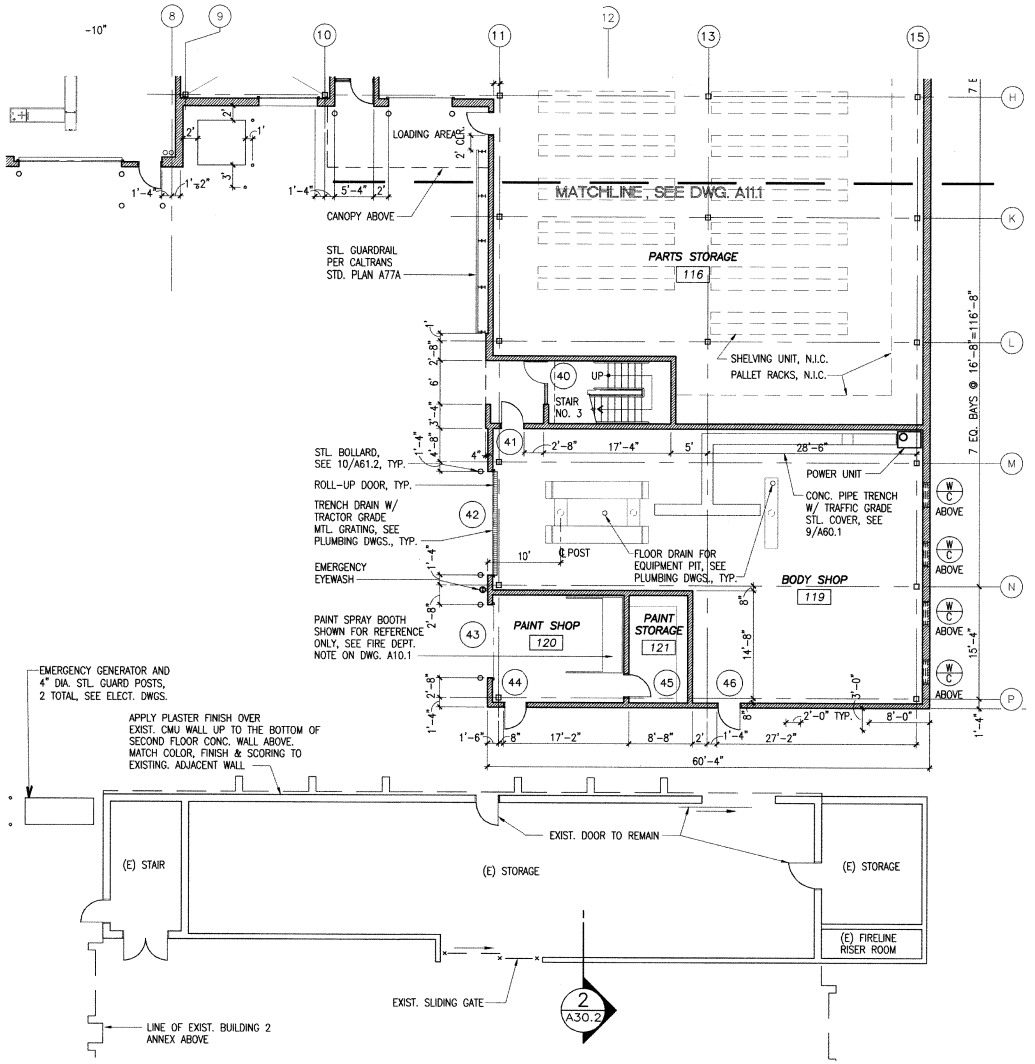

GROUND FLOOR PLAN

1/8"=1'-0"

1 / A11.2

AS BUILT
Contract No. BUS-443B
Date NOV. 2000

NOTES:
1. FINISH GROUND FLOOR ELEVATION = EL. 22.00' (DATUM +0'-0")
2. SEE STRUCT. DRAWINGS FOR THICKNESS OF CMU
3. SEE A40.1 AND A40.2 FOR EQUIPMENT LEGEND AND LOCATIONS.
4. SEE A32.1 FOR ENLARGED STAIR PLANS.
5. SEE A32.3 FOR ENLARGED ELEVATOR PLANS.
6. SEE A61.1 FOR PARTITION TYPES.
6. ALL DOORS AND WINDOWS SHALL MEET THE MINIMUM INFILTRATION REQUIREMENTS PER SECTION 116 E.E.S.

CONSTRUCTION CHANGE TABLE

CHANGE	DATE	SHEET NUMBERS REVISED OR ADDED THIS CHANGE
1	9/29/99	CHG DOOR SWING, RM 208

STV Incorporated
ENGINEERS/ARCHITECTS/PLANNERS/CONSTRUCTION MANAGERS
1055 WILSHIRE BOULEVARD, SUITE 1455
LOS ANGELES, CALIFORNIA 90017-2499

LICENSED ARCHITECT C-24485 RENEWAL DATE STATE OF CALIFORNIA

		DATE
DESIGNED BY	K. Kim	12/17/98
DRAWN BY	S. Escobar	12/17/98
CHECKED BY	M. Fernandes	12/17/98
MTDB PRJ. ENG.		

MTDB
Metropolitan Transit Development Board
1255 Imperial Avenue, Suite 1000, San Diego, Ca. 92101-7490 (619)231-1466

IMPERIAL AVENUE DIVISION
BUS MAINTENANCE FACILITY

GROUND AND STREET LEVEL FLOOR PLANS

SCALE 1/8"=1'-0"
MTDB CONTRACT NO. BUS-443B
DRAWING NO. A11.2
SHEET NO. 16

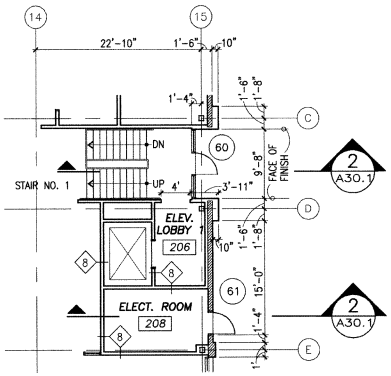

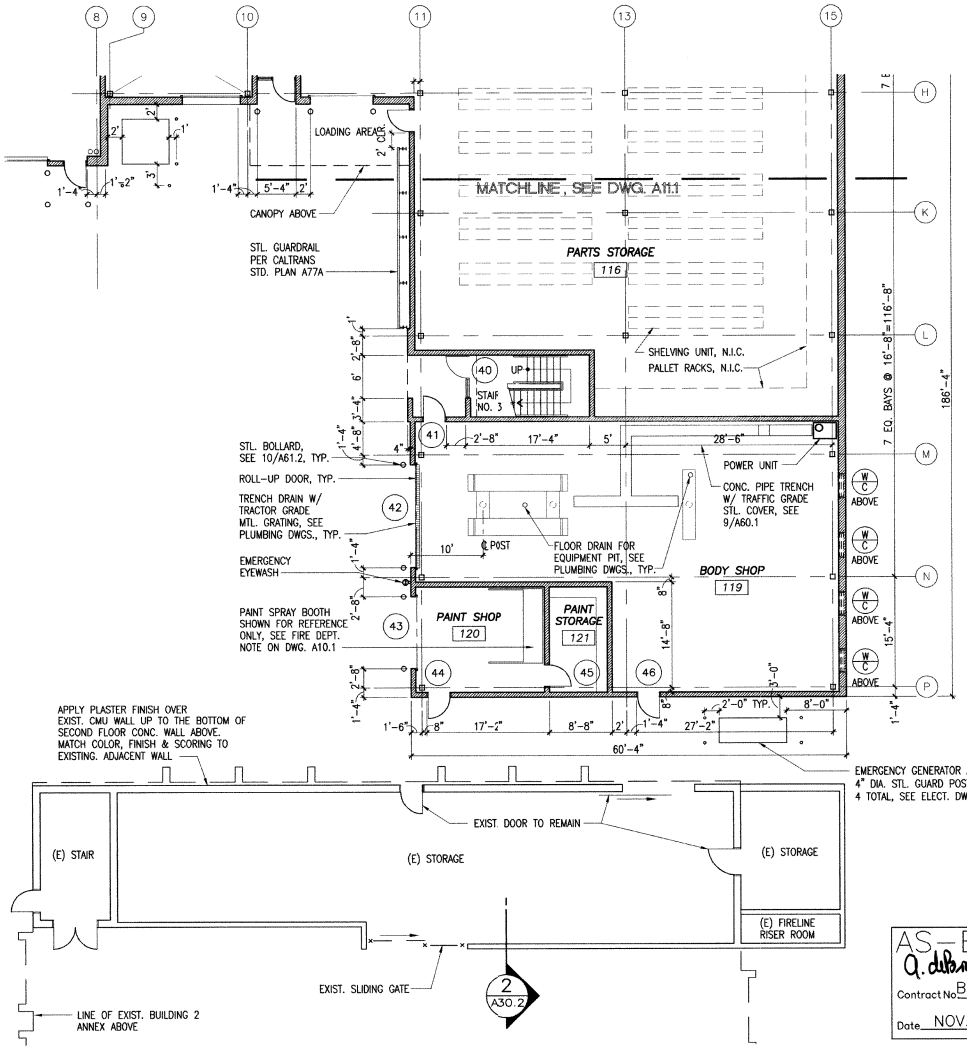

AS-BUILT
Contract No. BUS-443B
Date NOV. 2000

STREET LEVEL FLOOR PLAN 2 A11.2
1/8"=1'-0"

GROUND FLOOR PLAN 1 A11.2
1/8"=1'-0"

NOTES:
1. FINISH GROUND FLOOR ELEVATION = EL. 22.00' (DATUM +0'-0")
2. SEE STRUCT. DRAWINGS FOR THICKNESS OF CMU
3. SEE A40.1 AND A40.2 FOR EQUIPMENT LEGEND AND LOCATIONS.
4. SEE A32.1 FOR ENLARGED STAIR PLANS.
5. SEE A32.3 FOR ENLARGED ELEVATOR PLANS.
6. SEE A61.1 FOR PARTITION TYPES.
6. ALL DOORS AND WINDOWS SHALL MEET THE MINIMUM INFILTRATION REQUIREMENTS PER SECTION 116 E.E.S.

CONSTRUCTION CHANGE TABLE		
CHANGE	DATE	SHEET NUMBERS REVISED OR ADDED THIS CHANGE
1	9/29/99	CHG DOOR SWING, RM 208

STV Incorporated
ENGINEERS/ARCHITECTS/PLANNERS/CONSTRUCTION MANAGERS
1055 WILSHIRE BOULEVARD, SUITE 1455
LOS ANGELES, CALIFORNIA 90017-2499

LICENSED ARCHITECT TON SOO KIM C-24485 REGISTERED DATE STATE OF CALIFORNIA

		DATE
DESIGNED BY	K. Kim	12/17/98
DRAWN BY	S. Escobar	12/17/98
CHECKED BY	M. Fernandes	12/17/98
MTDB PRJ. ENG.		

MTDB
Metropolitan Transit Development Board
1255 Imperial Avenue, Suite 1000, San Diego, Ca. 92101-7490 (619)231-1466

IMPERIAL AVENUE DIVISION
BUS MAINTENANCE FACILITY

GROUND AND STREET LEVEL FLOOR PLANS

SCALE 1/8"=1'-0"
MTDB CONTRACT NO. BUS-443B
DRAWING NO. A11.2
SHEET NO. 16

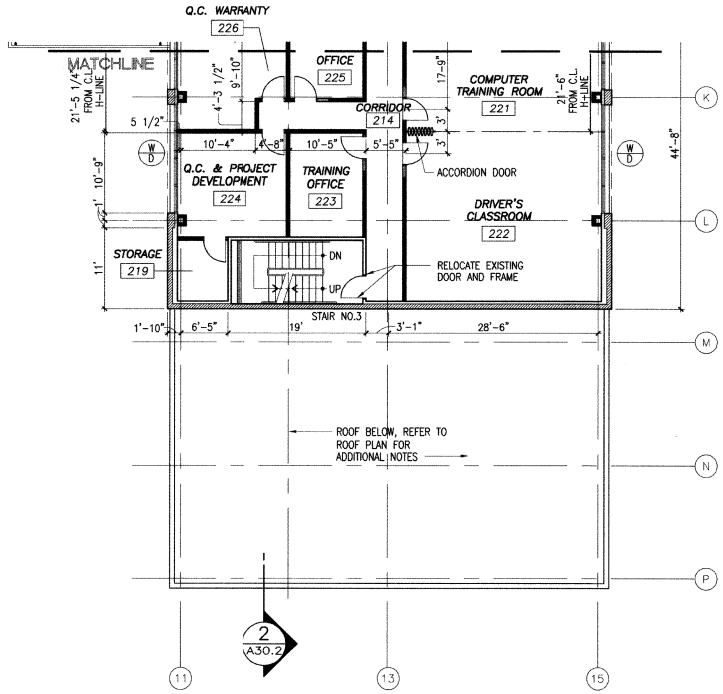

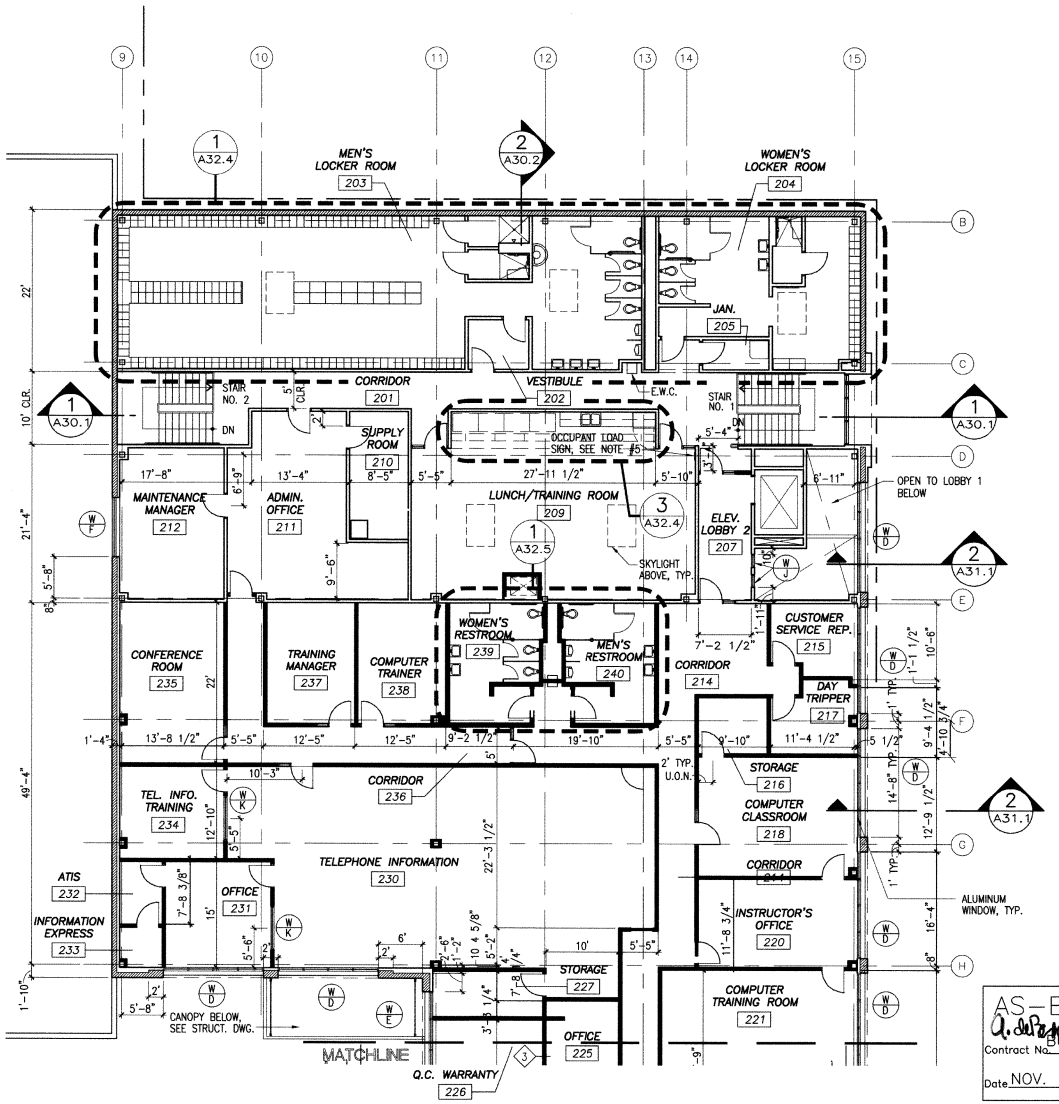

NOTES:

1. SEE A32.1 FOR ENLARGED STAIR PLANS.
2. SEE A32.3 FOR ENLARGED ELEVATOR PLANS.
3. SEE STRUCT. DRAWINGS FOR THICKNESS OF CMU.
4. POSTING OF THE CAPACITY OF THE ROOM SHALL BE BY MEANS OF A DURABLE SIGN HAVING CONTRASTING COLOR FROM THE BACKGROUND TO WHICH IT IS ATTACHED. THE NUMBER OF OCCUPANTS PERMITTED FOR ROOM 209 SHALL BE 61.
5. ALL DOORS AND WINDOWS SHALL MEET THE MINIMUM INFILTRATION REQUIREMENTS PER SECTION 116 E.E.S.
6. SEE A11.4 FOR DOOR NUMBERS AND PARTITION TYPES.

SECOND FLOOR PLAN 1/8"=1'-0" (1 / A11.3)

LEGEND

EXISTING PARTITION

NEW PARTITION

AS-BUILT
Contract No. BUS-443B
Date NOV. 2000

CONSTRUCTION CHANGE TABLE		
CHANGE	DATE	SHEET NUMBERS REVISED OR ADDED THIS CHANGE
1	6/28/99	ADDENDUM NO. 1
2	9/27/99	DOOR #63 REVISION
3	4/17/00	SECOND FLOOR INTERIOR IMPROVEMENTS

STV Incorporated
ENGINEERS/ARCHITECTS/PLANNERS/CONSTRUCTION MANAGERS
1055 WILSHIRE BOULEVARD, SUITE 1455
LOS ANGELES, CALIFORNIA 90017-2499

DESIGNED BY	K. Kim	DATE 6/12/00
DRAWN BY	S. Escobar	6/12/00
CHECKED BY	M. Fernandes	6/12/00
MTDB PRJ. ENG.		

MTDB
Metropolitan Transit Development Board
1255 Imperial Avenue, Suite 1000, San Diego, Ca. 92101-7490 (619)231-1466

IMPERIAL AVENUE DIVISION
BUS MAINTENANCE FACILITY

SECOND FLOOR PLAN

SCALE	1/8"=1'-0"
MTDB CONTRACT NO.	BUS-443B
DRAWING NO.	A11.3
SHEET NO.	17

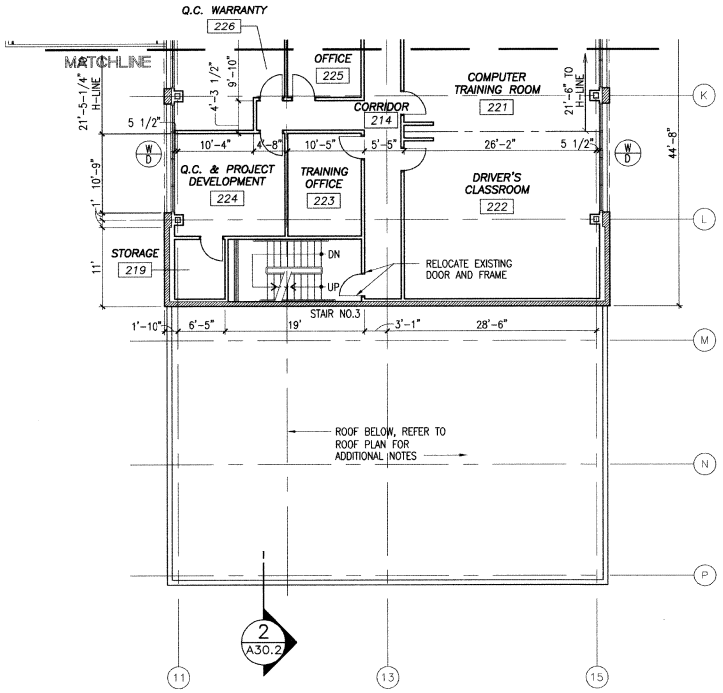

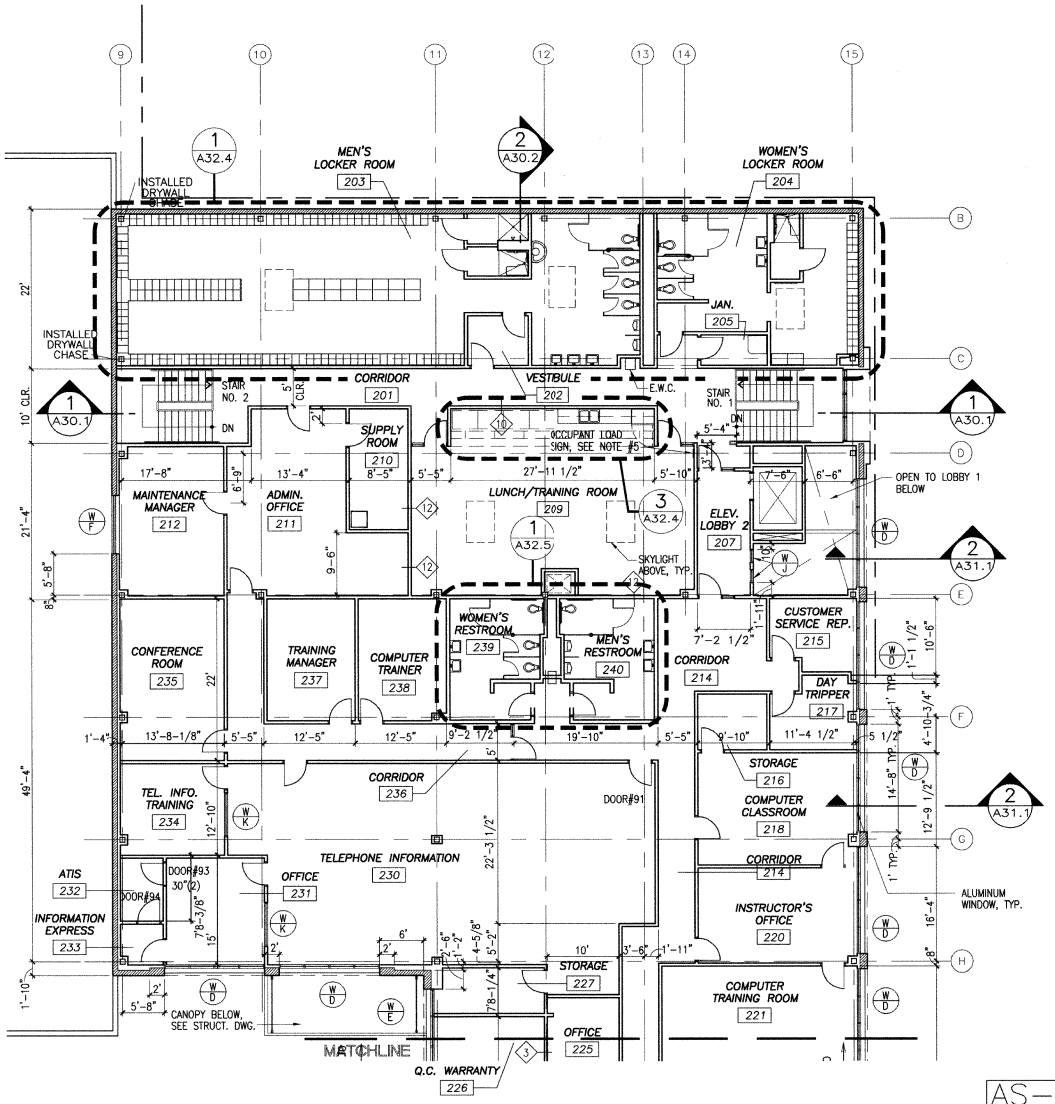

NOTES:

1. SEE A32.1 FOR ENLARGED STAIR PLANS.
2. SEE A32.3 FOR ENLARGED ELEVATOR PLANS.
3. SEE STRUCT. DRAWINGS FOR THICKNESS OF CMU.
4. POSTING OF THE CAPACITY OF THE ROOM SHALL BE BY MEANS OF A DURABLE SIGN HAVING CONTRASTING COLOR FROM THE BACKGROUND TO WHICH IT IS ATTACHED. THE NUMBER OF OCCUPANTS PERMITTED FOR ROOM 209 SHALL BE 61.
5. ALL DOORS AND WINDOWS SHALL MEET THE MINIMUM INFILTRATION REQUIREMENTS PER SECTION 116 E.E.S.
6. SEE A11.4 FOR DOOR NUMBERS AND PARTITION TYPES.

SECOND FLOOR PLAN

1/8"=1'-0"

A11.3

AS-BUILT
Contract No BUS-443B
Date NOV. 2000

CHANGE	DATE	SHEET NUMBERS REVISED OR ADDED THIS CHANGE
1	6/28/99	ADDENDUM NO. 1
2	9/27/99	DOOR #63 REVISION
3	4/17/00	SECOND FLOOR INTERIOR IMPROVEMENTS

STV Incorporated
ENGINEERS/ARCHITECTS/PLANNERS/CONSTRUCTION MANAGERS
1055 WILSHIRE BOULEVARD, SUITE 1455
LOS ANGELES, CALIFORNIA 90017-2499

DESIGNED BY	K. Kim	DATE 12/17/98
DRAWN BY	S. Escobar	12/17/98
CHECKED BY	M. Fernandes	12/17/98
MTDB PRJ. ENG.		

MTDB
Metropolitan Transit Development Board
1255 Imperial Avenue, Suite 1000, San Diego, Ca. 92101-7490 (619)231-1466

IMPERIAL AVENUE DIVISION
BUS MAINTENANCE FACILITY

SECOND FLOOR PLAN

SCALE 1/8"=1'-0"
MTDB CONTRACT NO. BUS-443B
DRAWING NO. A11.3
SHEET NO. 17

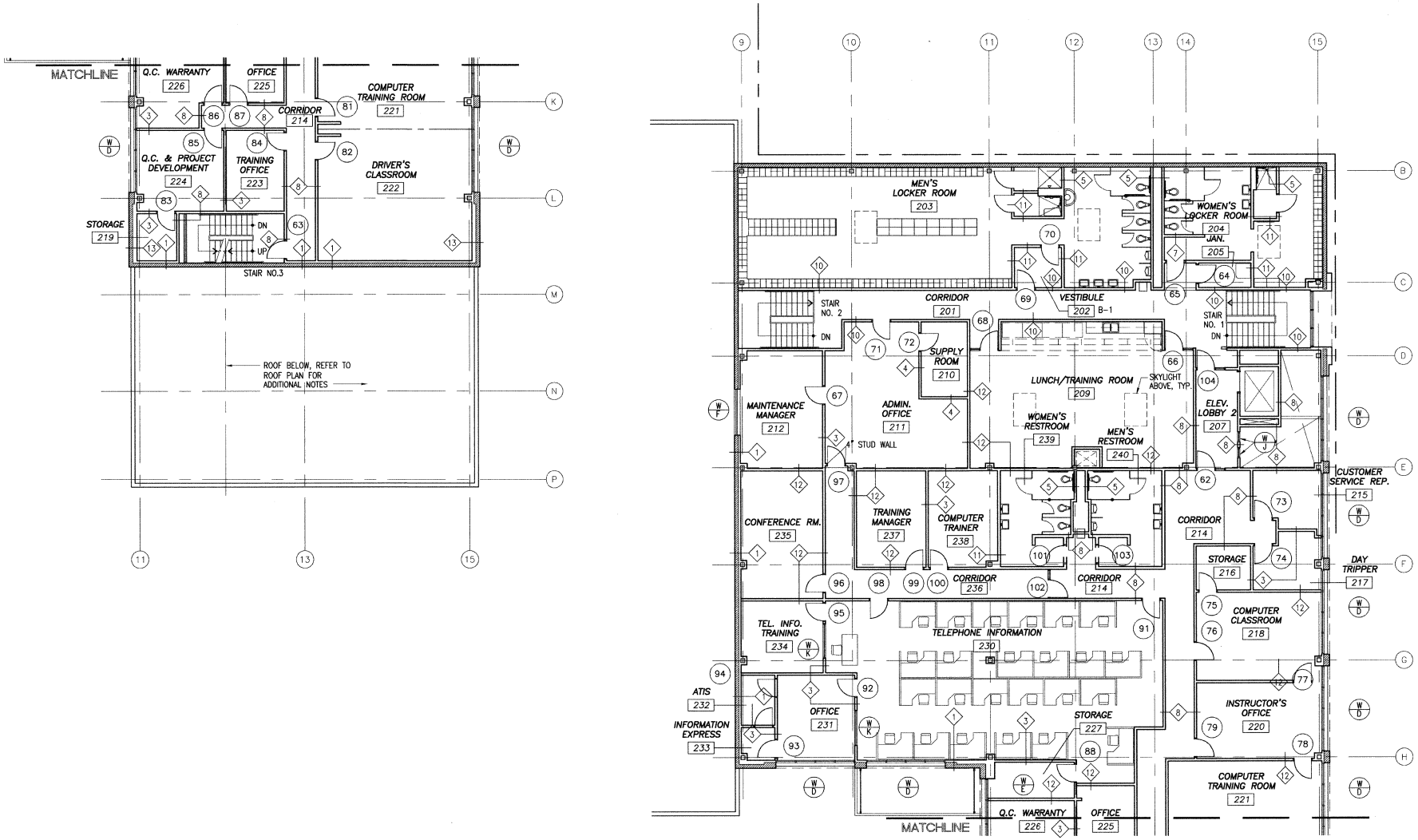

NOTES:
1. SEE A11.3 FOR NOTES AND DIMENSIONS.
2. SEE A61.1 FOR PARTITION TYPES.
3. ALL DOORS AND WINDOWS SHALL MEET THE MINIMUM INFILTRATION REQUIREMENTS PER SECTION 116 E.E.S.

SECOND FLOOR PLAN 1/8"=1'-0" (1 / A11.4)

AS-BUILT
Q. deBernal
Contract No. BUS-443B
Date NOV. 2000

CONSTRUCTION CHANGE TABLE		
CHANGE	DATE	SHEET NUMBERS REVISED OR ADDED THIS CHANGE
4	4/17/00	SECOND FLOOR INTERDR IMPROVEMENTS
5	5/10/00	WALL TYPE CLARIFICATON

STV Incorporated
ENGINEERS/ARCHITECTS/PLANNERS/CONSTRUCTION MANAGERS
1055 WILSHIRE BOULEVARD, SUITE 1455
LOS ANGELES, CALIFORNIA 90017-2499

		DATE
DESIGNED BY	K. Kim	4/17/00
DRAWN BY	S. Escobar	4/17/00
CHECKED BY	M. Fernandes	4/17/00
MTDB PRJ. ENG.		

MTDB
Metropolitan Transit Development Board
1255 Imperial Avenue, Suite 1000, San Diego, Ca. 92101-7490 (619)231-1466

IMPERIAL AVENUE DIVISION
BUS MAINTENANCE FACILITY

SECOND FLOOR PLAN

SCALE 1/8"=1'-0"
MTDB CONTRACT NO. BUS-443B
DRAWING NO. A11.4
SHEET NO. 17A

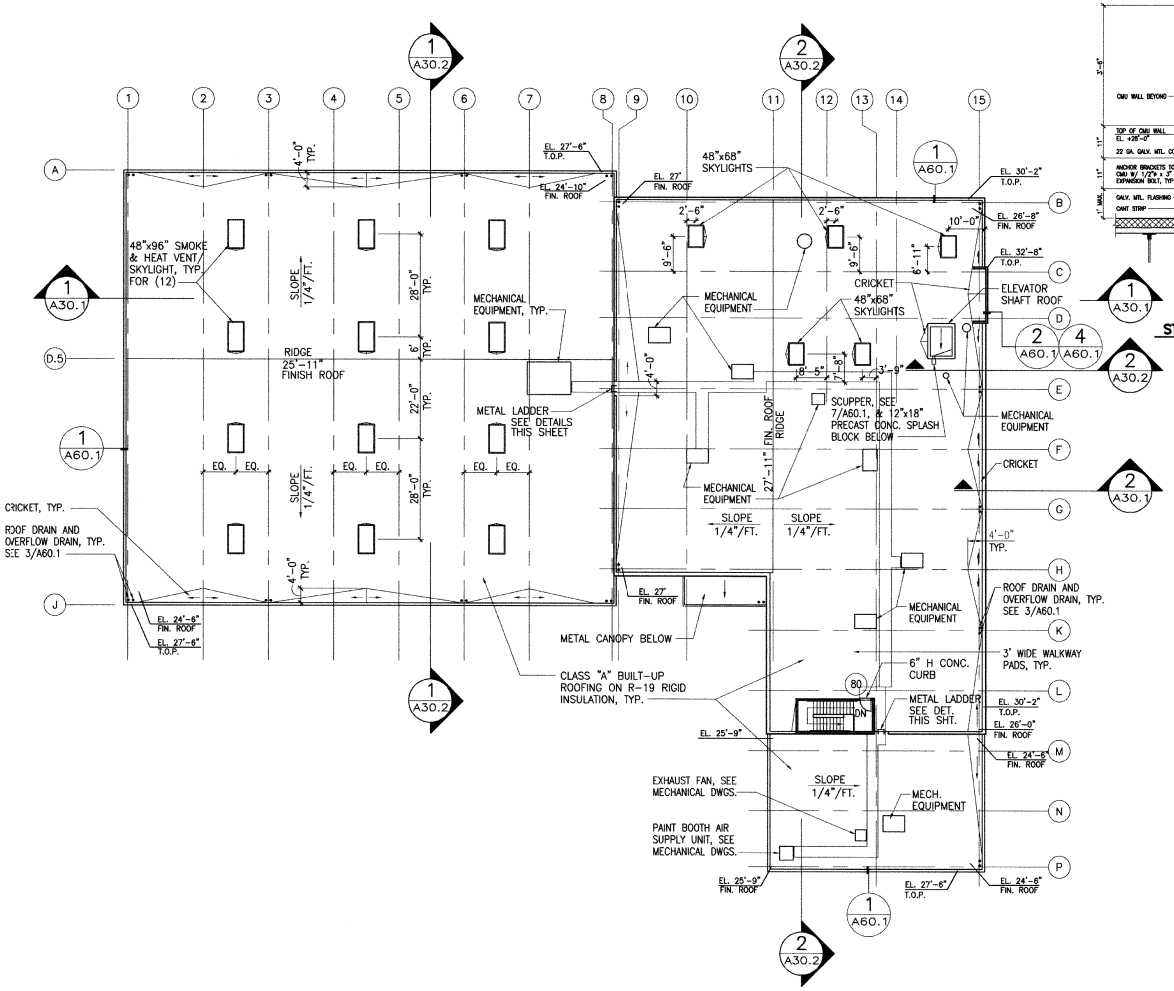

ROOF PLAN 1/16"=1'-0" (1/A12.1)

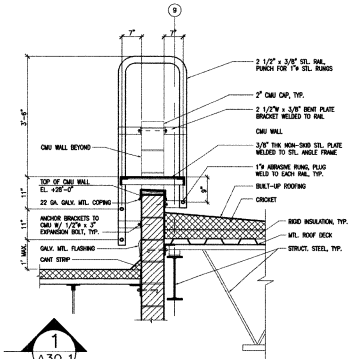

STEEL LADDER SECTION R2 3/4"=1'-0"

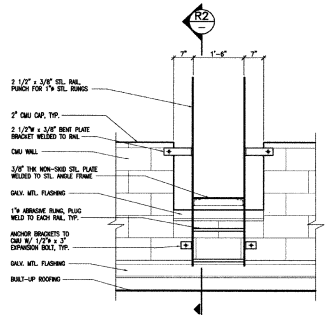

STEEL LADDER ELEVATION R1 NONE

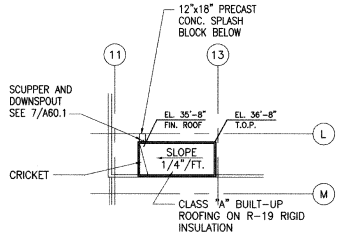

AS-BUILT
Contract No. BUS-443B
Date NOV. 2000

UPPER ROOF PLAN 1/16"=1'-0" (2/A12.1)

CONSTRUCTION CHANGE TABLE		
CHANGE	DATE	SHEET NUMBERS REVISED OR ADDED THIS CHANGE
1	6/28/99	ADDENDUM NO. 1

STV Incorporated
ENGINEERS/ARCHITECTS/PLANNERS/CONSTRUCTION MANAGERS
1055 WILSHIRE BOULEVARD, SUITE 1455
LOS ANGELES, CALIFORNIA 90017-2469

REGISTERED ARCHITECT JOHN SOO PARK C-24485 RENEWAL 08/31/99 STATE OF CALIFORNIA

DESIGNED BY	K. Kim	12/17/98
DRAWN BY	S. Escobar	12/17/98
CHECKED BY	M. Fernandes	12/17/98
MTDB PRJ. ENG.		

MTDB
Metropolitan Transit Development Board
1255 Imperial Avenue, Suite 1000, San Diego, Ca. 92101-7490 (619)231-1466

IMPERIAL AVENUE DIVISION
BUS MAINTENANCE FACILITY

ROOF PLANS

SCALE	1/16"=1'-0"
MTDB CONTRACT NO.	BUS-443B
DRAWING NO.	A12.1
SHEET NO.	18

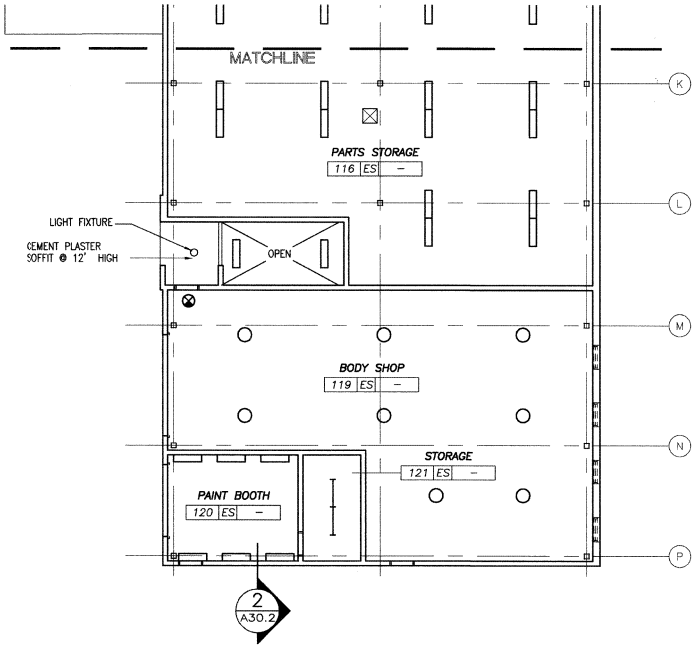

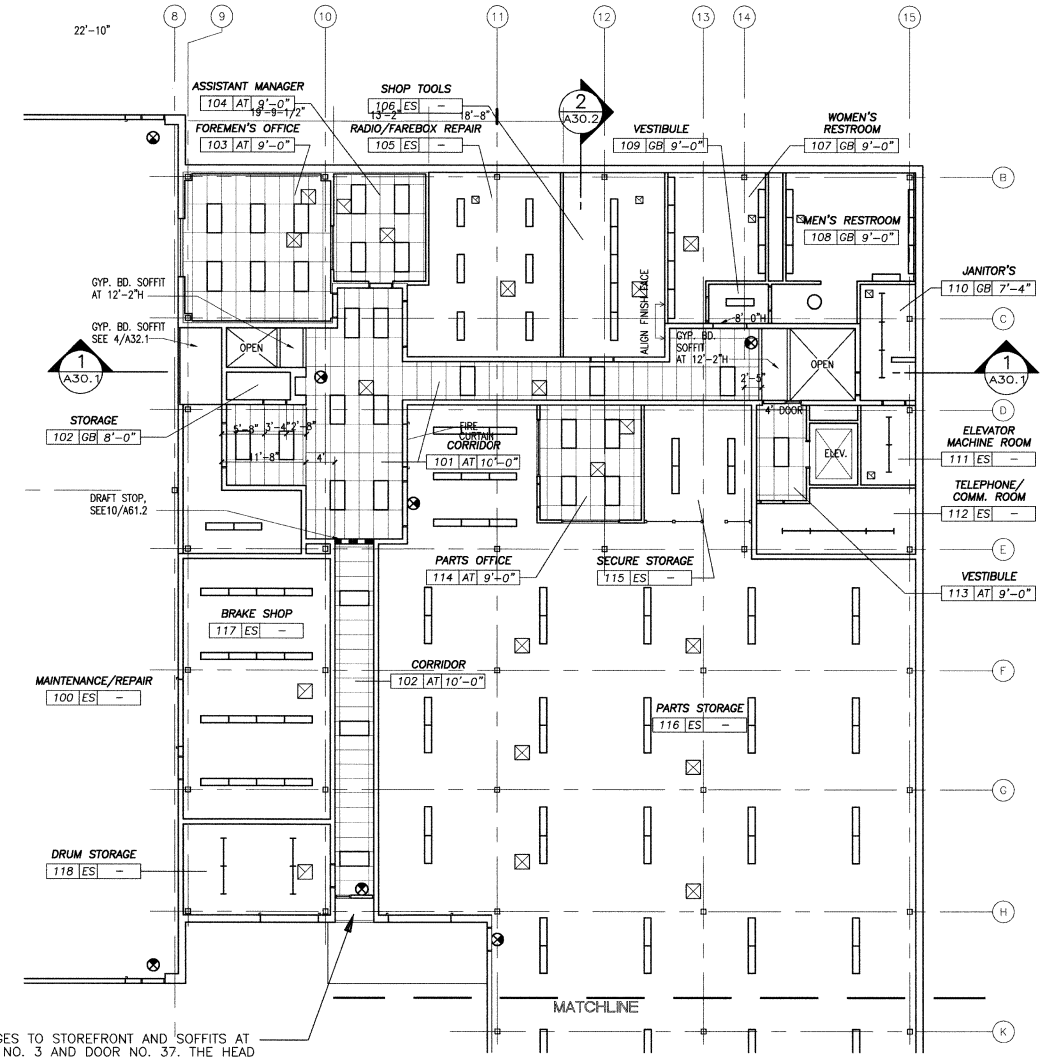

CHANGES TO STOREFRONT AND SOFFITS AT STAIR NO. 3 AND DOOR NO. 37. THE HEAD WALL WAS CHANGE TO A STUD WALL. ONE-HOUR RATED SEE TYPR 8 DWG. A51.1

LEGEND

- 2'x4' SUSPENDED ACOUSTICAL CEILING
- 1'x4' / 2'x4' FLUORESCENT LIGHTING FIXTURES (RECESSED UNLESS NOTED OTHERWISE)
- FLUORESCENT STRIP LIGHTING FIXTURE
- DOWNLIGHT FIXTURE
- EXIT SIGN
- PUBLIC ADDRESS SYSTEM SPEAKER
- FIRE SPRINKLER HEAD
- CEILING START POINT FOR CEILING GRID
- RETURN AIR REGISTER
- SUPPLY REGISTER
- EXHAUST AIR REGISTER
- ROOF HATCH/EQUIPT. ACCESS HATCH

ROOM NUMBER
ROOM NAME
101 AT 9'-6" — CEILING HEIGHT
CEILING MATERIAL

NOTES:

1. IN GRID CEILINGS, MOUNT ALL ITEMS IN CENTER OF TILE, UNLESS SHOWN OTHERWISE.
2. IN GYP. BD. CEILINGS, CENTER LIGHT FIXTURES UNLESS SHOWN OTHERWISE.
3. LIGHT FIXTURES IN ROOMS 120 & 121 SHALL BE EXPLOSION-PROOF TYPE.
4. EXIT SIGNS MUST BE INTERNALLY ILLUMINATED.

GROUND FLOOR REFLECTED CEILING PLAN

1/8"=1'-0"

1 / A13.1

AS-BUILT
Contract No. BUS-443B
Date NOV. 2000

CONSTRUCTION CHANGE TABLE		
CHANGE	DATE	SHEET NUMBERS REVISED OR ADDED THIS CHANGE

STV Incorporated
ENGINEERS/ARCHITECTS/PLANNERS/CONSTRUCTION MANAGERS
1055 WILSHIRE BOULEVARD, SUITE 1455
LOS ANGELES, CALIFORNIA 90017-2499

LICENSED ARCHITECT — NEW YORK — C-24485 — STATE OF CALIFORNIA — RENEWAL DATE

		DATE
DESIGNED BY	K. Kim	12/17/98
DRAWN BY	S. Escobar	12/17/98
CHECKED BY	M. Fernandes	12/17/98
MTDB PRJ. ENG.		

MTDB
Metropolitan Transit Development Board
1255 Imperial Avenue, Suite 1000, San Diego, Ca. 92101-7490 (619)231-1466

IMPERIAL AVENUE DIVISION
BUS MAINTENANCE FACILITY

GROUND FLOOR
REFLECTED CEILING PLAN

SCALE	
1/8"=1'-0"	
MTDB CONTRACT NO.	
BUS-443B	
DRAWING NO.	SHEET NO.
A13.1	19

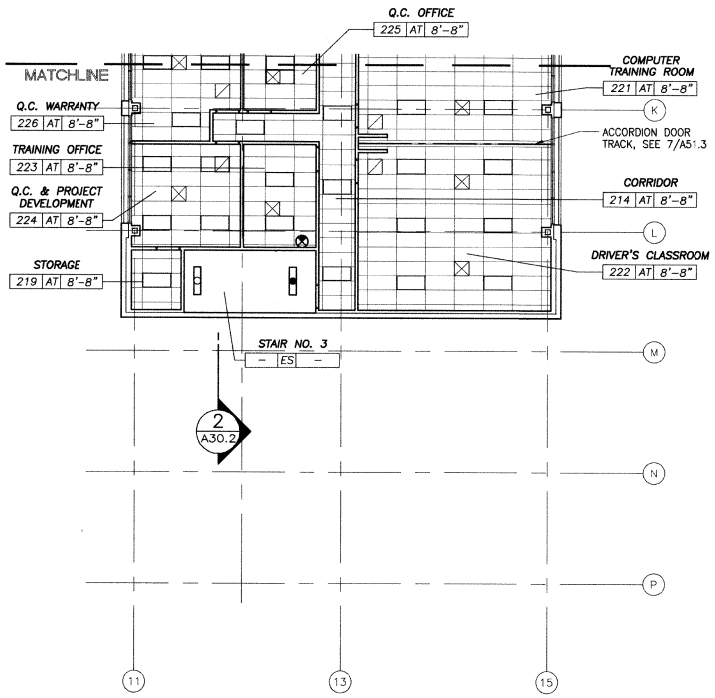

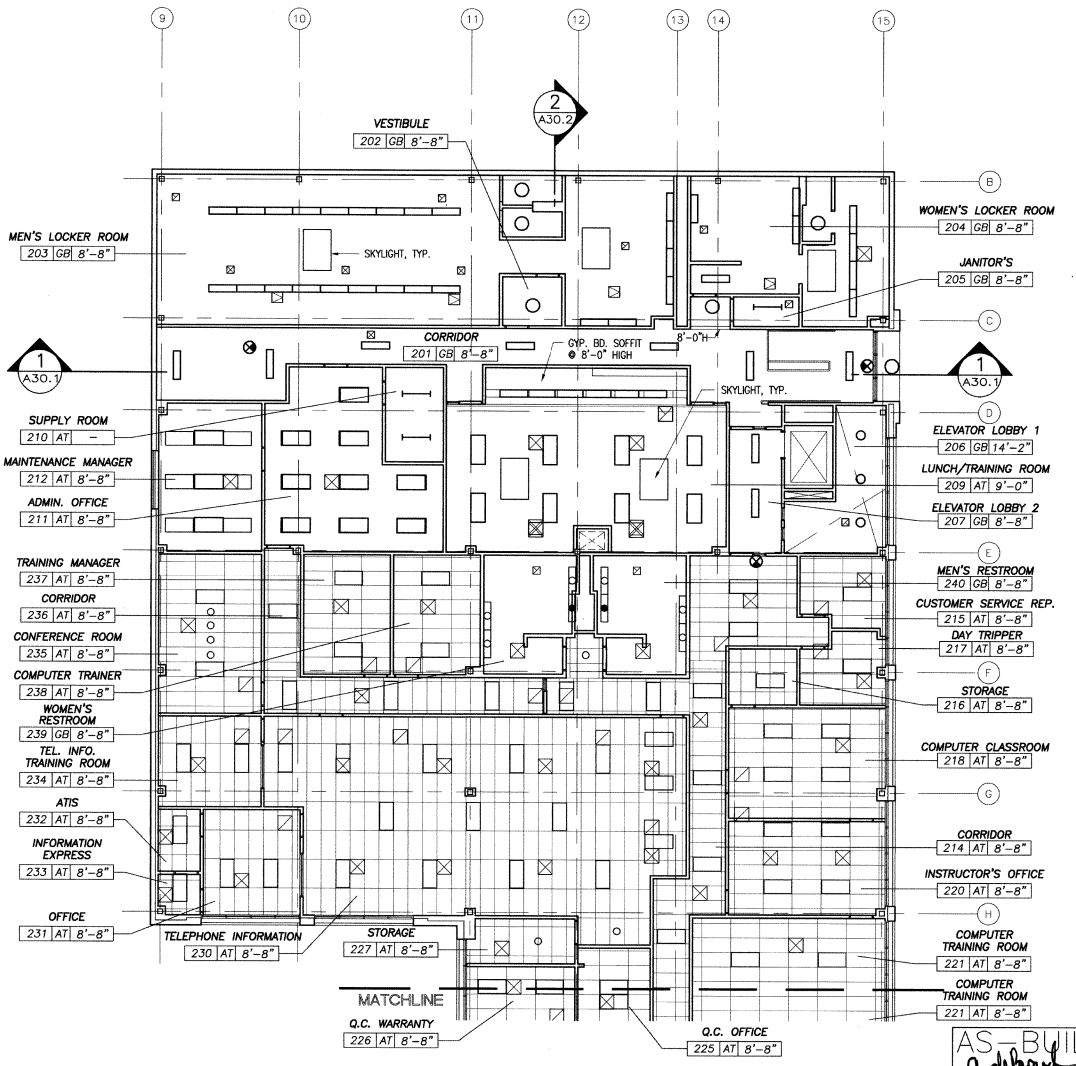

LEGEND

- 2'x4' SUSPENDED ACOUSTICAL CEILING
- 1'x4' / 2'x4' FLUORESCENT LIGHTING FIXTURES (RECESSED UNLESS NOTED OTHERWISE)
- FLUORESCENT STRIP LIGHTING FIXTURE
- DOWNLIGHT FIXTURE
- EXIT SIGN
- PUBLIC ADDRESS SYSTEM SPEAKER
- FIRE SPRINKLER HEAD
- CEILING START POINT FOR CEILING GRID
- RETURN AIR REGISTER
- SUPPLY REGISTER
- EXHAUST AIR REGISTER
- ROOF HATCH/EQUIPT. ACCESS HATCH

NOTES:

1. IN GRID CEILINGS, MOUNT ALL ITEMS IN CENTER OF TILE, UNLESS SHOWN OTHERWISE.
2. IN GYP. BD. CEILINGS, CENTER LIGHT FIXTURES UNLESS SHOWN OTHERWISE.
3. LIGHT FIXTURES IN ROOMS 120 & 121 SHALL BE EXPLOSION-PROOF TYPE.
4. EXIT SIGNS MUST BE INTERNALLY ILLUMINATED.

SECOND FLOOR REFLECTED CEILING PLAN

1/8"=1'-0"

1 / A13.2

AS-BUILT
Contract No. BUS-443B
Date NOV. 2000

CONSTRUCTION CHANGE TABLE		
CHANGE	DATE	SHEET NUMBERS REVISED OR ADDED THIS CHANGE
1	6/28/99	ADDENDUM NO. 1
2	4/17/00	SECOND FLOOR INTERIOR IMPROVEMENTS

STV Incorporated
ENGINEERS/ARCHITECTS/PLANNERS/CONSTRUCTION MANAGERS
1055 WILSHIRE BOULEVARD, SUITE 1455
LOS ANGELES, CALIFORNIA 90017-2499

		DATE
DESIGNED BY	K. Kim	4/17/00
DRAWN BY	S. Escobar	4/17/00
CHECKED BY	M. Fernandes	4/17/00
MTDB PRJ. ENG.		

MTDB
Metropolitan Transit Development Board
1255 Imperial Avenue, Suite 1000, San Diego, Ca. 92101-7490 (619)231-1466

IMPERIAL AVENUE DIVISION
BUS MAINTENANCE FACILITY

SECOND FLOOR
REFLECTED CEILING PLAN

SCALE	1/8"=1'-0"
MTDB CONTRACT NO.	BUS-443B
DRAWING NO.	A13.2
SHEET NO.	20

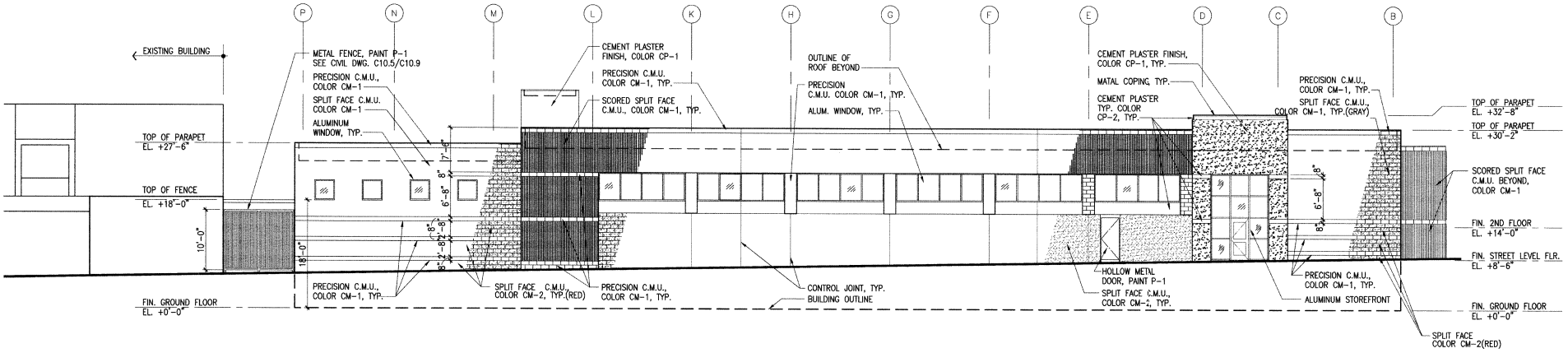

EAST ELEVATION 1
1/8"=1'-0" A20.1

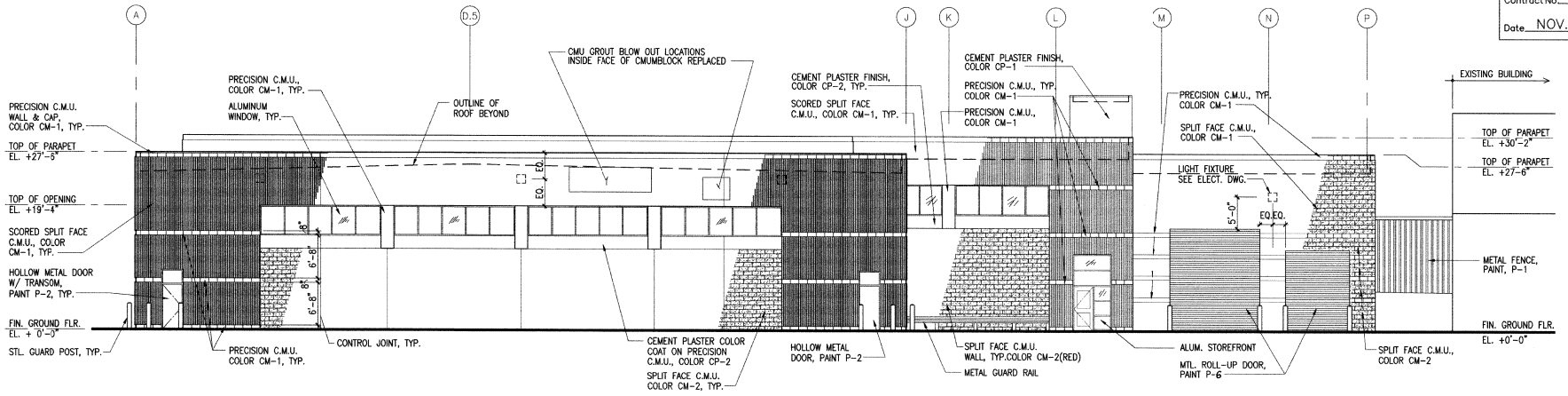

WEST ELEVATION 2
1/8"=1'-0" A20.1

AS-BUILT
a. dubrand
Contract No. BUS-443B
Date NOV. 2000

NOTES
1. APPLY WATER REPELLENT COATING ON ALL EXPOSED EXTERIOR CMU WALLS.
2. APPLY ANTI-GRAFFITI COATING ON ALL EXPOSED EXTERIOR WALLS LOCATED WITHIN 5'-0" FROM PROPERTY LINE, UP TO 12'-0" ABOVE FINISH GRADE.

CONSTRUCTION CHANGE TABLE

CHANGE	DATE	SHEET NUMBERS REVISED OR ADDED THIS CHANGE
1	6/28/99	ADDENDUM NO. 1

STV Incorporated
ENGINEERS/ARCHITECTS/PLANNERS/CONSTRUCTION MANAGERS
1055 WILSHIRE BOULEVARD, SUITE 1455
LOS ANGELES, CALIFORNIA 90017-2489

LICENSED ARCHITECT CITY OF SAN DIEGO C-24485 RENEWAL DATE STATE OF CALIFORNIA

		DATE
DESIGNED BY	K. Kim	12/17/98
DRAWN BY	S. Escobar	12/17/98
CHECKED BY	M. Fernandes	12/17/98
MTDB PRJ. ENG.		

MTDB
Metropolitan Transit Development Board
1255 Imperial Avenue, Suite 1000, San Diego, Ca. 92101-7490 (619)231-1466

IMPERIAL AVENUE DIVISION
BUS MAINTENANCE FACILITY

EXTERIOR ELEVATIONS

SCALE	1/8"=1'-0"
MTDB CONTRACT NO.	BUS-443B
DRAWING NO.	A20.1
SHEET NO.	21

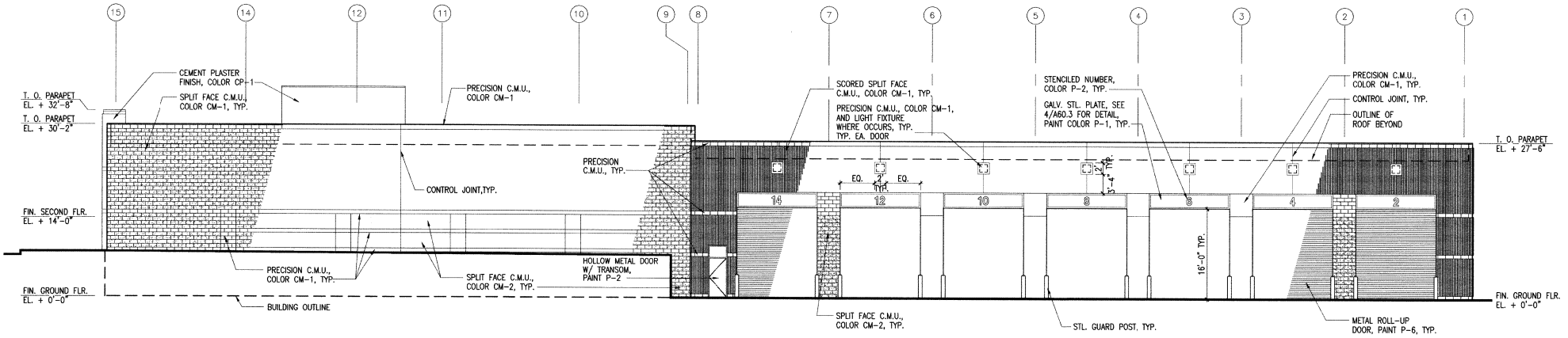

NORTH ELEVATION 1
1/8"=1'-0" A20.2

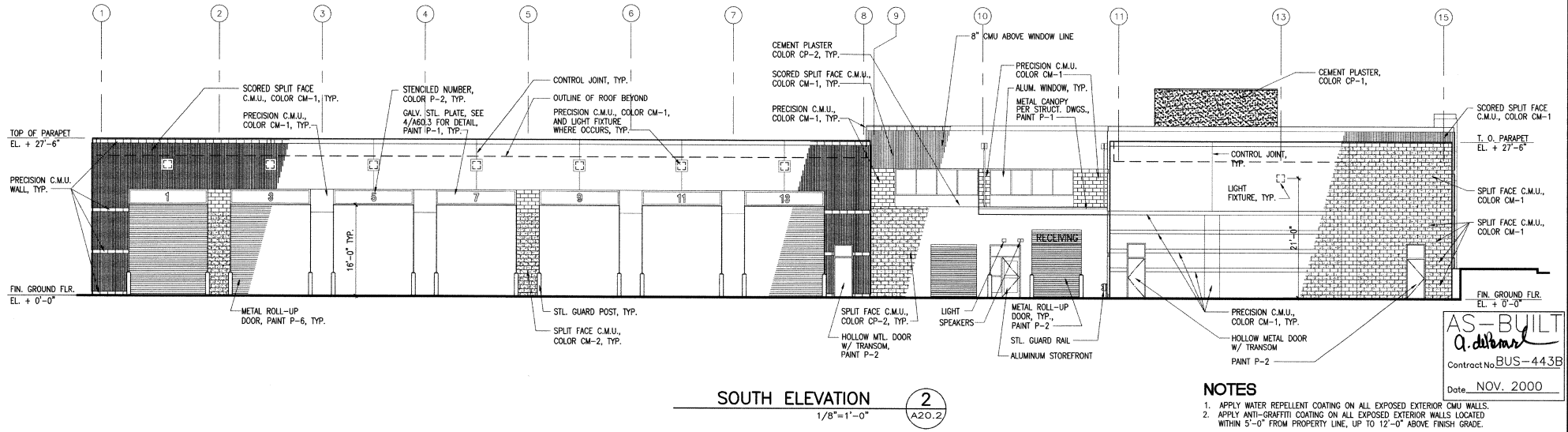

SOUTH ELEVATION 2
1/8"=1'-0" A20.2

AS-BUILT
Contract No. BUS-443B
Date NOV. 2000

NOTES

1. APPLY WATER REPELLENT COATING ON ALL EXPOSED EXTERIOR CMU WALLS.
2. APPLY ANTI-GRAFFITI COATING ON ALL EXPOSED EXTERIOR WALLS LOCATED WITHIN 5'-0" FROM PROPERTY LINE, UP TO 12'-0" ABOVE FINISH GRADE.

CONSTRUCTION CHANGE TABLE

CHANGE	DATE	SHEET NUMBERS REVISED OR ADDED THIS CHANGE

STV Incorporated
ENGINEERS/ARCHITECTS/PLANNERS/CONSTRUCTION MANAGERS
1055 WILSHIRE BOULEVARD, SUITE 1455
LOS ANGELES, CALIFORNIA 90017-2499

LICENSED ARCHITECT C-24485 STATE OF CALIFORNIA

DESIGNED BY K. Kim	DATE 12/17/98
DRAWN BY S. Escobar	12/17/98
CHECKED BY M. Fernandes	12/17/98
MTDB PRJ. ENG.	

MTDB
Metropolitan Transit Development Board
1255 Imperial Avenue, Suite 1000, San Diego, Ca. 92101-7490 (619)231-1466

IMPERIAL AVENUE DIVISION
BUS MAINTENANCE FACILITY

EXTERIOR ELEVATIONS

SCALE	1/8"=1'-0"
MTDB CONTRACT NO.	BUS-443B
DRAWING NO.	A20.2
SHEET NO.	22

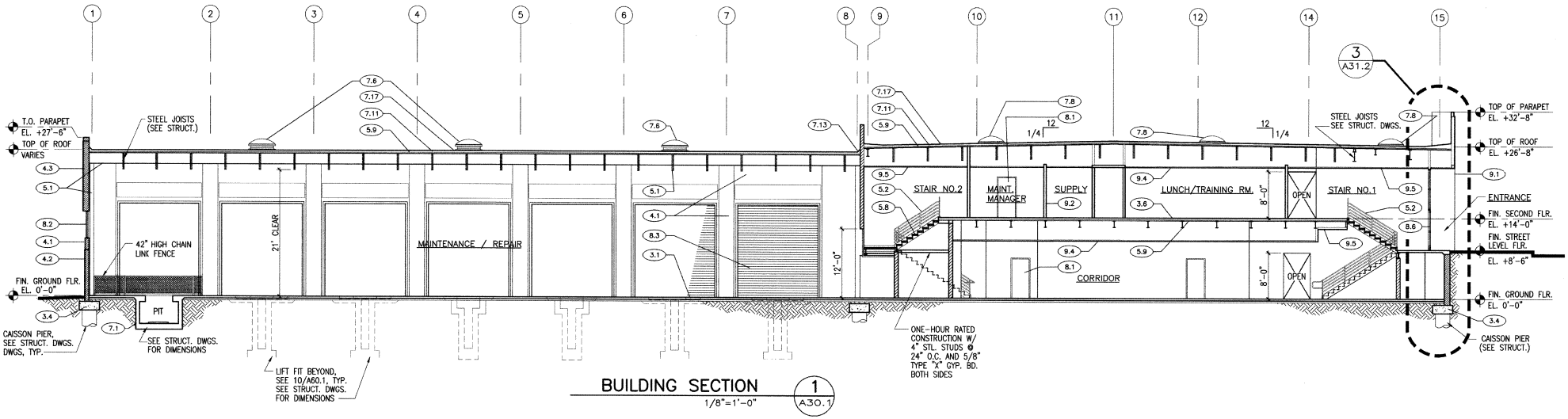

BUILDING SECTION 1 A30.1
1/8"=1'-0"

NOTES:

1. PROVIDE ONE-HOUR RATED SPRAY-ON FIREPROOFING ON ALL EXPOSED COLUMNS AND JOISTS IN ROOMS 116, 117 & 118 ONLY.
2. PROVIDE WATERPROOF MEMBRANE AND PROTECTION BOARD PER SPECIFICATIONS ON ALL BELOW GRADE RETAINING WALLS AND PIT FOUNDATION WALLS.
3. PROVIDE ONE HOUR RATED SPRAY-ON FIREPROOFING ON ALL COLUMNS AND JOINTS IN BRAKE SHOP AND PART OF MAINT./REPAIR SHOP AS INDICATED ON DWG. A10.2

KEYNOTES

3. CONCRETE
- 3.1 CONCRETE SLAB
- 3.2 CONCRETE APPROACH SLAB
- 3.3 CONCRETE APRON
- 3.4 CONCRETE FOOTING
- 3.5 CONCRETE STAIR
- 3.6 NORMAL WEIGHT CONTRETE
- 3.7 CONCRETE CURB

4. MASONRY
- 4.1 CONCRETE MASONRY - PRECISION
- 4.2 CONCRETE MASONRY - SPLIT FACE
- 4.3 CONCRETE MASONRY - SCORED SPLIT FACE

5. METALS
- 5.1 PAINTED STEEL STRUCTURE
- 5.2 PAINTED STEEL HANDRAIL
- 5.3 PAINTED STEEL PLATE
- 5.4 PAINTED STEEL BRACING
- 5.5 PAINTED STEEL LADDER
- 5.6 PAINTED STEEL GUARDRAIL
- 5.7 PAINTED STEEL CAGE
- 5.8 PAINTED STEEL PAN STAIR
- 5.9 METAL DECK
- 5.10 LOAD-BEARING METAL STUD FRAMING
- 5.11 SAFETY NOSING
- 5.12 METAL LOUVER

7. THERMAL AND MOISTURE PROTECTION
- 7.1 WATERPROOF MEMBRANE
- 7.2 BATT INSULATION
- 7.3 METAL FLASHING
- 7.4 METAL GUTTER
- 7.5 METAL DOWNSPOUT
- 7.6 SMOKE & HEAT VENT/SKYLIGHT
- 7.7 SHEET METAL COPING
- 7.8 SKYLIGHT
- 7.9 ROOF DRAIN
- 7.10 OVERFLOW DRAIN
- 7.11 RIGID INSULATION (R-19)
- 7.12 BUILDING PAPER
- 7.13 CANT STRIP
- 7.14 FIREPROOFING
- 7.15 SEALANT/CAULKING
- 7.16 SOUND ATTENUATION INSULATION
- 7.17 BUILT-UP ROOFING

8. DOORS AND WINDOWS
- 8.1 HOLLOW METAL DOOR AND FRAME
- 8.2 ALUMINUM WINDOW
- 8.3 METAL OVERHEAD COILING DOOR
- 8.4 FIRE RATED STEEL WINDOW
- 8.5 ACCESS DOOR
- 8.6 ALUMINUM STOREFRONT WINDOW/ DOOR SYSTEM

9. FINISHES
- 9.1 METAL LATH AND CEMENT PLASTER
- 9.2 GYPSUM WALLBOARD
- 9.3 PAINTED FINISH
- 9.4 SUSPENDED ACOUSTICAL CEILING SYSTEM
- 9.5 SUSPENDED GYPSUM BOARD CEILING
- 9.6 CERAMIC TILE
- 9.7 BASE
- 9.8 METAL STUDS
- 9.9 VINYL TILE FLOORING

AS-BUILT
Contract No. BUS-443B
Date NOV. 2000

CONSTRUCTION CHANGE TABLE		
CHANGE	DATE	SHEET NUMBERS REVISED OR ADDED THIS CHANGE

STV Incorporated
ENGINEERS/ARCHITECTS/PLANNERS/CONSTRUCTION MANAGERS
1055 WILSHIRE BOULEVARD, SUITE 1485
LOS ANGELES, CALIFORNIA 90017-2499

LICENSED ARCHITECT JOHN SOO KIM C-24485 RENEWAL DATE STATE OF CALIFORNIA

DESIGNED BY	K. Kim	12/17/98
DRAWN BY	S. Escobar	12/17/98
CHECKED BY	M. Fernandes	12/17/98
MTDB PRJ. ENG.		

MTDB
Metropolitan Transit Development Board
1255 Imperial Avenue, Suite 1000, San Diego, Ca. 92101-7490 (619)231-1466

IMPERIAL AVENUE DIVISION
BUS MAINTENANCE FACILITY

BUILDING SECTIONS

SCALE	1/8"=1'-0"
MTDB CONTRACT NO.	BUS-443B
DRAWING NO.	A30.1
SHEET NO.	23

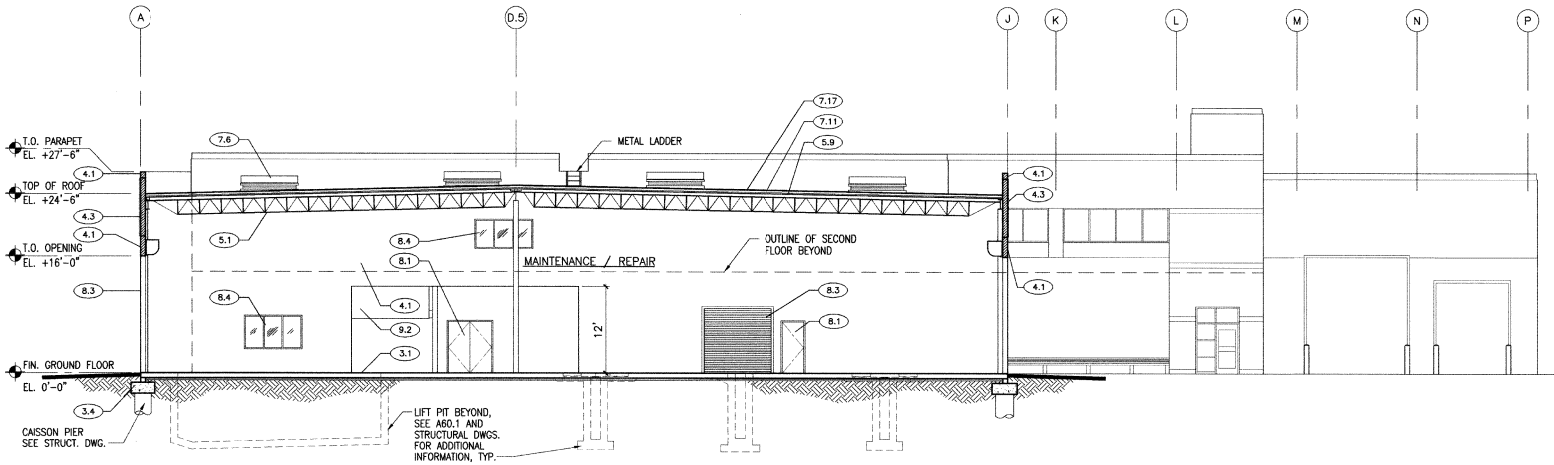

BUILDING SECTION 1 / A30.2
1/8"=1'-0"

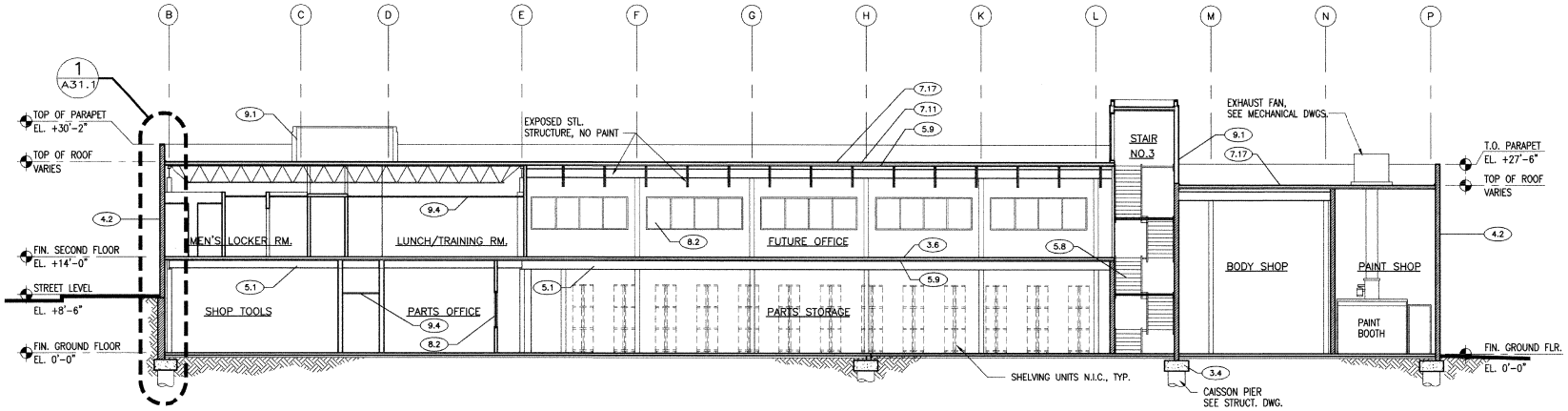

BUILDING SECTION 2 / A30.2
1/8"=1'-0"

KEYNOTES

3. CONCRETE

3.1 CONCRETE SLAB
3.2 CONCRETE APPROACH SLAB
3.3 CONCRETE APRON
3.4 CONCRETE FOOTING
3.5 CONCRETE STAIR
3.6 NORMAL WEIGHT CONTRETE
3.7 CONCRETE CURB

4. MASONRY

4.1 CONCRETE MASONRY – PRECISION
4.2 CONCRETE MASONRY – SPLIT FACE
4.3 CONCRETE MASONRY – SCORED SPLIT FACE

5. METALS

5.1 PAINTED STEEL STRUCTURE
5.2 PAINTED STEEL HANDRAIL
5.3 PAINTED STEEL PLATE
5.4 PAINTED STEEL BRACING
5.5 PAINTED STEEL LADDER
5.6 PAINTED STEEL GUARDRAIL
5.7 PAINTED STEEL CAGE
5.8 PAINTED STEEL PAN STAIR
5.9 METAL DECK
5.10 LOAD-BEARING METAL STUD FRAMING
5.11 SAFETY NOSING
5.12 METAL LOUVER

7. THERMAL AND MOISTURE PROTECTION

7.1 WATERPROOF MEMBRANE
7.2 BATT INSULATION
7.3 METAL FLASHING
7.4 METAL GUTTER
7.5 METAL DOWNSPOUT
7.6 SMOKE & HEAT VENT/SKYLIGHT
7.7 SHEET METAL COPING
7.8 SKYLIGHT
7.9 ROOF DRAIN
7.10 OVERFLOW DRAIN
7.11 RIGID INSULATION (R-19)
7.12 BUILDING PAPER
7.13 CANT STRIP
7.14 FIREPROOFING
7.15 SEALANT/CAULKING
7.16 SOUND ATTENUATION INSULATION
7.17 BUILT-UP ROOFING

8. DOORS AND WINDOWS

8.1 HOLLOW METAL DOOR AND FRAME
8.2 ALUMINUM WINDOW
8.3 METAL OVERHEAD COILING DOOR
8.4 FIRE RATED STEEL WINDOW
8.5 ACCESS DOOR
8.6 ALUMINUM STOREFRONT WINDOW/ DOOR SYSTEM

9. FINISHES

9.1 METAL LATH AND CEMENT PLASTER
9.2 GYPSUM WALLBOARD
9.3 PAINTED FINISH
9.4 SUSPENDED ACOUSTICAL CEILING SYSTEM
9.5 SUSPENDED GYPSUM BOARD CEILING
9.6 CERAMIC TILE
9.7 BASE
9.8 METAL STUDS
9.9 VINYL TILE FLOORING

AS-BUILT
Q. deBerard
Contract No. BUS-443B
Date NOV. 2000

NOTES:

1. PROVIDE ONE-HOUR RATED SPRAY-ON FIREPROOFING ON ALL EXPOSED COLUMNS AND JOISTS IN ROOMS 114, 115, 116, 117 & 118 ONLY.
2. PROVIDE WATERPROOF MEMBRANE AND PROTECTION BOARD PER SPECIFICATIONS ON ALL BELOW GRADE RETAINING WALLS AND PIT FOUNDATION WALLS.

CONSTRUCTION CHANGE TABLE		
CHANGE	DATE	SHEET NUMBERS REVISED OR ADDED THIS CHANGE
1	6/28/99	ADDENDUM NO. 1

STV Incorporated
ENGINEERS/ARCHITECTS/PLANNERS/CONSTRUCTION MANAGERS
1055 WILSHIRE BOULEVARD, SUITE 1455
LOS ANGELES, CALIFORNIA 90017-2499

LICENSED ARCHITECT No. 5001 C-24485 STATE OF CALIFORNIA RENEWAL DATE

DESIGNED BY K. Kim	DATE 12/17/98
DRAWN BY S. Escobar	12/17/98
CHECKED BY M. Fernandes	12/17/98
MTDB PRJ. ENG.	

MTDB
Metropolitan Transit Development Board
1255 Imperial Avenue, Suite 1000, San Diego, Ca. 92101-7490 (619)231-1466

IMPERIAL AVENUE DIVISION
BUS MAINTENANCEW FACILITY

BUILDING SECTIONS

SCALE	
1/8"=1'-0"	
MTDB CONTRACT NO. BUS-443B	
DRAWING NO. A30.2	SHEET NO. 24

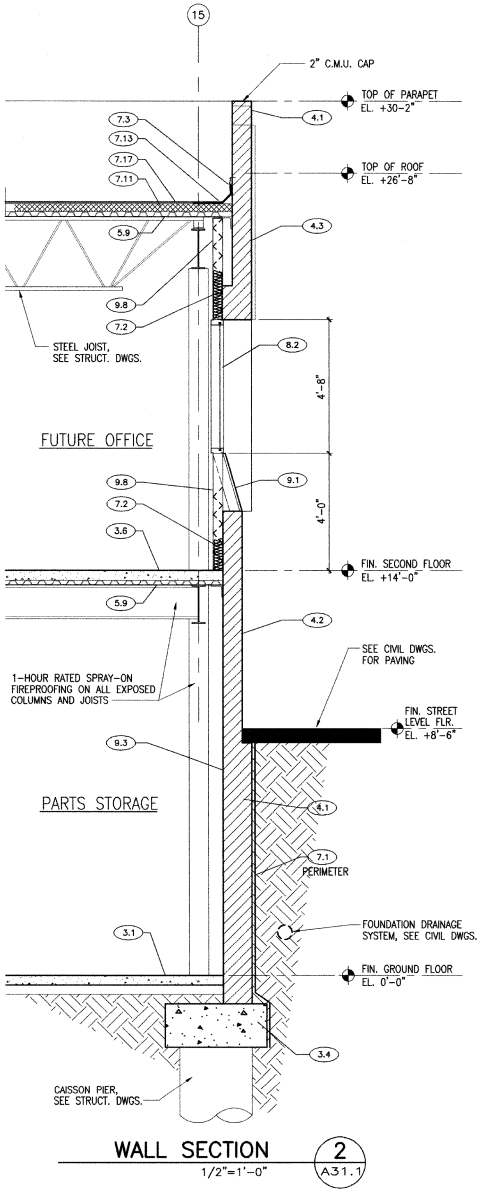

WALL SECTION 2 A31.1
1/2"=1'-0"

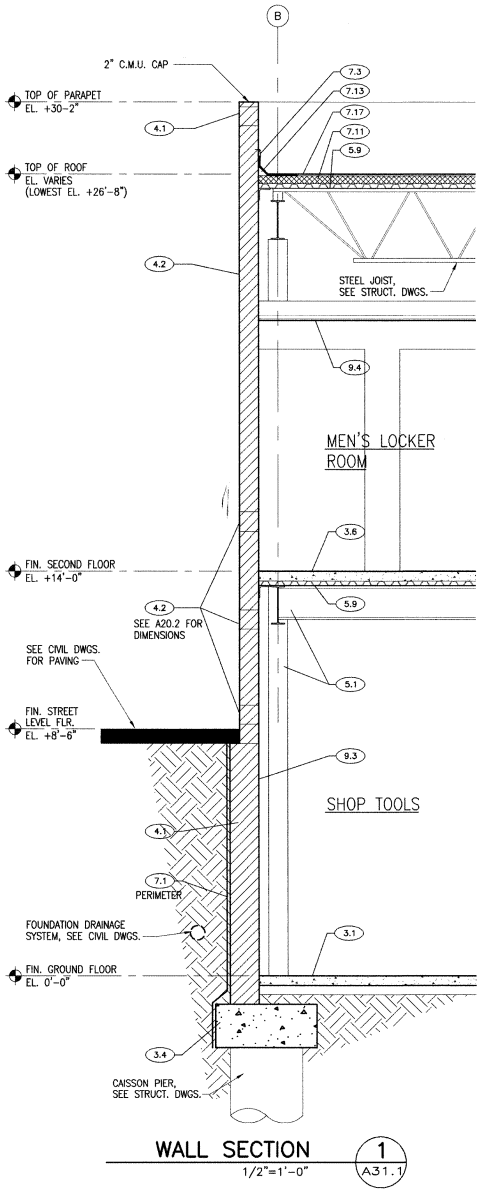

WALL SECTION 1 A31.1
1/2"=1'-0"

KEYNOTES

3. CONCRETE

3.1 CONCRETE SLAB
3.2 CONCRETE APPROACH SLAB
3.3 CONCRETE APRON
3.4 CONCRETE FOOTING
3.5 CONCRETE STAIR
3.6 NORMAL WEIGHT CONTRETE
3.7 CONCRETE CURB

4. MASONRY

4.1 CONCRETE MASONRY - PRECISION
4.2 CONCRETE MASONRY - SPLIT FACE
4.3 CONCRETE MASONRY - SCORED SPLIT FACE

5. METALS

5.1 PAINTED STEEL STRUCTURE
5.2 PAINTED STEEL HANDRAIL
5.3 PAINTED STEEL PLATE
5.4 PAINTED STEEL BRACING
5.5 PAINTED STEEL LADDER
5.6 PAINTED STEEL GUARDRAIL
5.7 PAINTED STEEL CAGE
5.8 PAINTED STEEL PAN STAIR
5.9 METAL DECK
5.10 LOAD-BEARING METAL STUD FRAMING
5.11 SAFETY NOSING
5.12 METAL LOUVER

7. THERMAL AND MOISTURE PROTECTION

7.1 WATERPROOF MEMBRANE
7.2 BATT INSULATION
7.3 METAL FLASHING
7.4 METAL GUTTER
7.5 METAL DOWNSPOUT
7.6 SMOKE & HEAT VENT/SKYLIGHT
7.7 SHEET METAL COPING
7.8 SKYLIGHT
7.9 ROOF DRAIN
7.10 OVERFLOW DRAIN
7.11 RIGID INSULATION (R-19)
7.12 BUILDING PAPER
7.13 CANT STRIP
7.14 FIREPROOFING
7.15 SEALANT/CAULKING
7.16 SOUND ATTENUATION INSULATION
7.17 BUILT-UP ROOFING

8. DOORS AND WINDOWS

8.1 HOLLOW METAL DOOR AND FRAME
8.2 ALUMINUM WINDOW
8.3 METAL OVERHEAD COILING DOOR
8.4 FIRE RATED STEEL WINDOW
8.5 ACCESS DOOR
8.6 ALUMINUM STOREFRONT WINDOW/ DOOR SYSTEM

9. FINISHES

9.1 METAL LATH AND CEMENT PLASTER
9.2 GYPSUM WALLBOARD
9.3 PAINTED FINISH
9.4 SUSPENDED ACOUSTICAL CEILING SYSTEM
9.5 SUSPENDED GYPSUM BOARD CEILING
9.6 CERAMIC TILE
9.7 BASE
9.8 METAL STUDS
9.9 VINYL TILE FLOORING

NOTES:

1. REFER TO CIVIL DRAWINGS FOR PERIMETER DRAINAGE SYSTEM AND RETAINING WALLS.
2. REFER TO DRAWING A51.3 FOR CMU TYPES AND COLORS.

AS-BUILT
Contract No. BUS-443B
Date NOV. 2000

CONSTRUCTION CHANGE TABLE		
CHANGE	DATE	SHEET NUMBERS REVISED OR ADDED THIS CHANGE
1	6/28/99	ADDENDUM NO. 1

STV Incorporated
ENGINEERS/ARCHITECTS/PLANNERS/CONSTRUCTION MANAGERS
1055 WILSHIRE BOULEVARD, SUITE 1455
LOS ANGELES, CALIFORNIA 90017-2499

LICENSED ARCHITECT C-24485 STATE OF CALIFORNIA

		DATE
DESIGNED BY	K. Kim	12/17/98
DRAWN BY	S. Escobar	12/17/98
CHECKED BY	M. Fernandes	12/17/98
MTDB PRJ. ENG.		

MTDB
Metropolitan Transit Development Board
1255 Imperial Avenue, Suite 1000, San Diego, Ca. 92101-7490 (619)231-1466

IMPERIAL AVENUE DIVISION
BUS MAINTENANCE FACILITY

WALL SECTIONS

SCALE 1/2"=1'-0"
MTDB CONTRACT NO. BUS-443B
DRAWING NO. A31.1
SHEET NO. 25

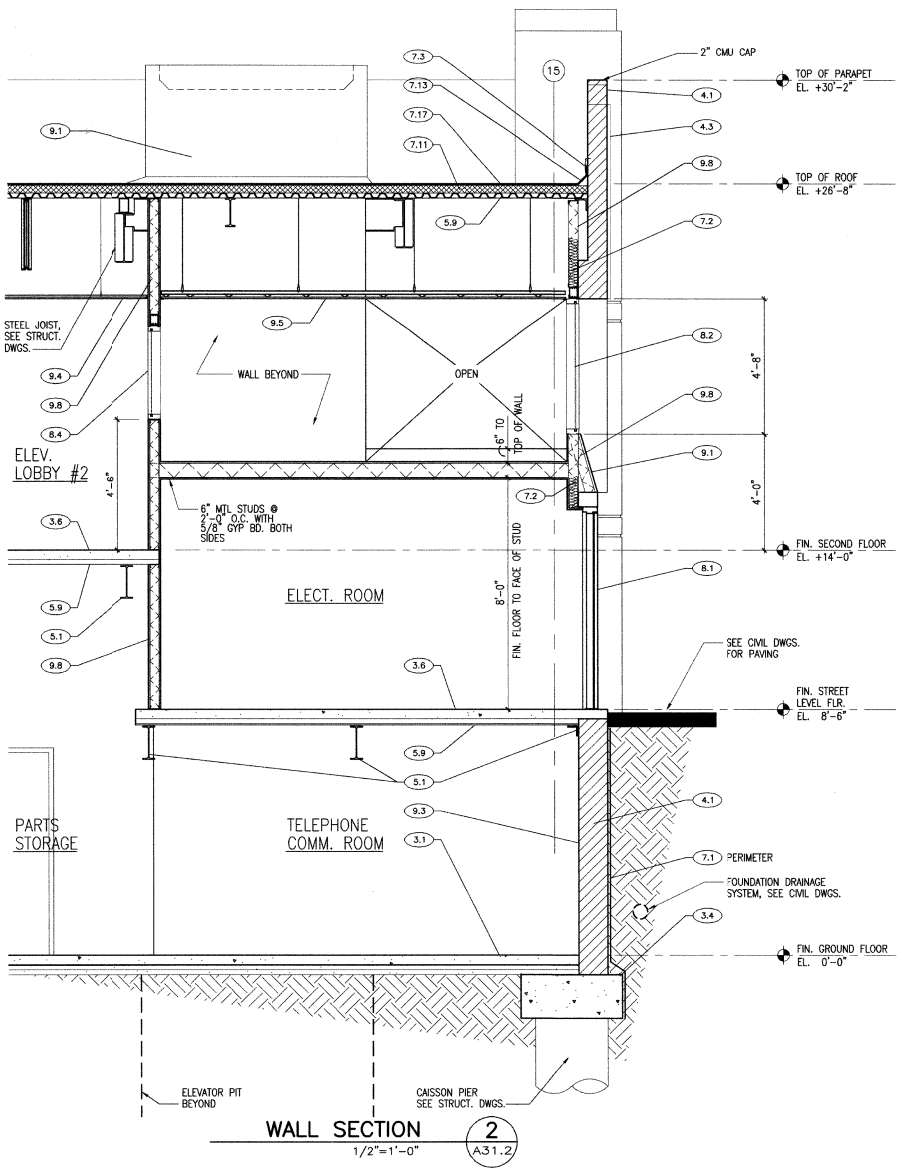

WALL SECTION 2 A31.2
1/2"=1'-0"

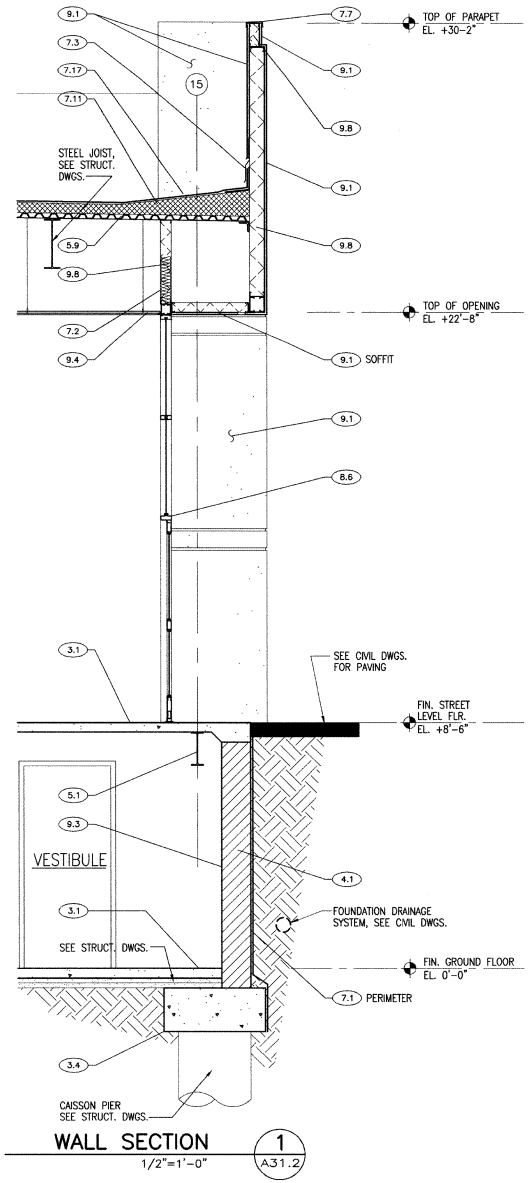

WALL SECTION 1 A31.2
1/2"=1'-0"

KEYNOTES

3. CONCRETE

3.1 CONCRETE SLAB
3.2 CONCRETE APPROACH SLAB
3.3 CONCRETE APRON
3.4 CONCRETE FOOTING
3.5 CONCRETE STAIR
3.6 NORMAL WEIGHT CONTRETE
3.7 CONCRETE CURB

4. MASONRY

4.1 CONCRETE MASONRY – PRECISION
4.2 CONCRETE MASONRY – SPLIT FACE
4.3 CONCRETE MASONRY – SCORED SPLIT FACE

5. METALS

5.1 PAINTED STEEL STRUCTURE
5.2 PAINTED STEEL HANDRAIL
5.3 PAINTED STEEL PLATE
5.4 PAINTED STEEL BRACING
5.5 PAINTED STEEL LADDER
5.6 PAINTED STEEL GUARDRAIL
5.7 PAINTED STEEL CAGE
5.8 PAINTED STEEL PAN STAIR
5.9 METAL DECK
5.10 LOAD-BEARING METAL STUD FRAMING
5.11 SAFETY NOSING
5.12 METAL LOUVER

7. THERMAL AND MOISTURE PROTECTION

7.1 WATERPROOF MEMBRANE
7.2 BATT INSULATION
7.3 METAL FLASHING
7.4 METAL GUTTER
7.5 METAL DOWNSPOUT
7.6 SMOKE & HEAT VENT/SKYLIGHT
7.7 SHEET METAL COPING
7.8 SKYLIGHT
7.9 ROOF DRAIN
7.10 OVERFLOW DRAIN
7.11 RIGID INSULATION (R-19)
7.12 BUILDING PAPER
7.13 CANT STRIP
7.14 FIREPROOFING
7.15 SEALANT/CAULKING
7.16 SOUND ATTENUATION INSULATION
7.17 BUILT-UP ROOFING

8. DOORS AND WINDOWS

8.1 HOLLOW METAL DOOR AND FRAME
8.2 ALUMINUM WINDOW
8.3 METAL OVERHEAD COILING DOOR
8.4 FIRE RATED STEEL WINDOW
8.5 ACCESS DOOR
8.6 ALUMINUM STOREFRONT WINDOW/ DOOR SYSTEM

9. FINISHES

9.1 METAL LATH AND CEMENT PLASTER
9.2 GYPSUM WALLBOARD
9.3 PAINTED FINISH
9.4 SUSPENDED ACOUSTICAL CEILING SYSTEM
9.5 SUSPENDED GYPSUM BOARD CEILING
9.6 CERAMIC TILE
9.7 BASE
9.8 METAL STUDS
9.9 VINYL TILE FLOORING

NOTES:

1. REFER TO CIVIL DRAWINGS FOR PERIMETER DRAINAGE SYSTEM AND RETAINING WALLS.
2. REFER TO DRAWING A51.3 FOR CMU TYPES AND COLORS.

AS-BUILT
A. deBoard
Contract No. BUS-443B
Date NOV. 2000

CONSTRUCTION CHANGE TABLE		
CHANGE	DATE	SHEET NUMBERS REVISED OR ADDED THIS CHANGE
1	6/28/99	ADDENDUM NO. 1

STV Incorporated
ENGINEERS/ARCHITECTS/PLANNERS/CONSTRUCTION MANAGERS
1055 WILSHIRE BOULEVARD, SUITE 1455
LOS ANGELES, CALIFORNIA 90017-2489

LICENSED ARCHITECT C-24485 RENEWAL DATE STATE OF CALIFORNIA

DESIGNED BY K. Kim	DATE 12/17/98
DRAWN BY S. Escobar	12/17/98
CHECKED BY M. Fernandes	12/17/98
MTDB PRJ. ENG.	

MTDB
Metropolitan Transit Development Board
1255 Imperial Avenue, Suite 1000, San Diego, Ca. 92101-7490 (619)231-1466

IMPERIAL AVENUE DIVISION
BUS MAINTENANCE FACILITY

WALL SECTIONS

SCALE 1/2"=1'-0"
MTDB CONTRACT NO. BUS-443B
DRAWING NO. A31.2
SHEET NO. 26

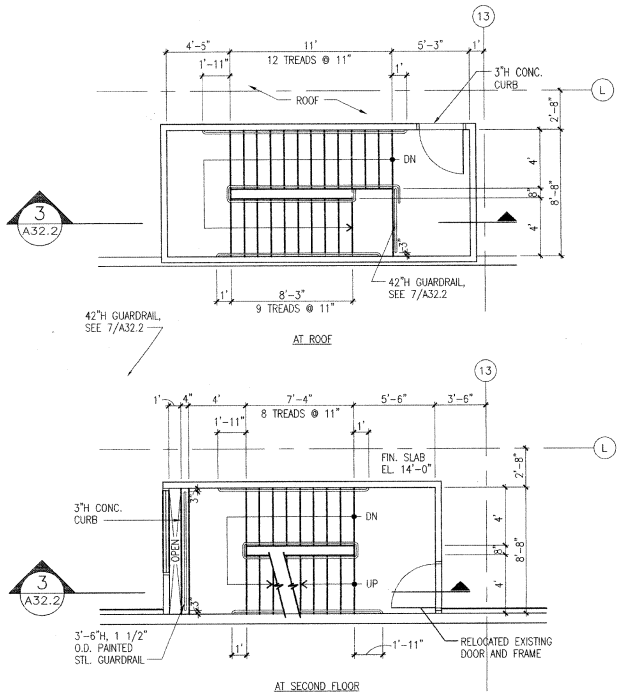

STAIR NO. 3 — 3 / A32.1 — 1/4"=1'-0"

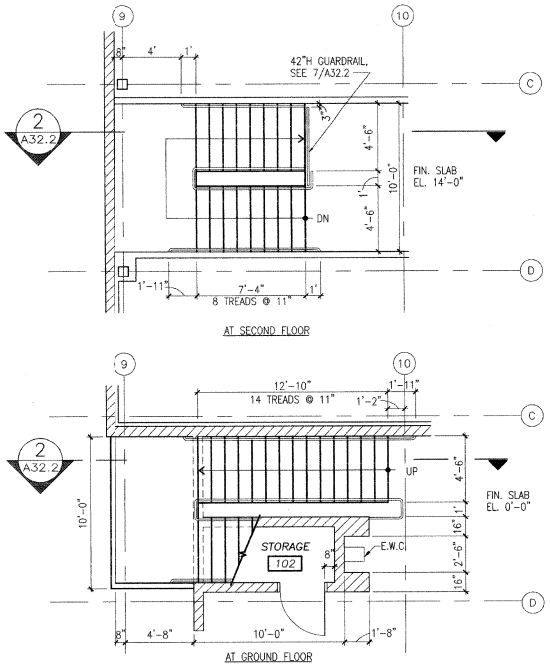

STAIR NO. 2 — 2 / A32.1 — 1/4"=1'-0"

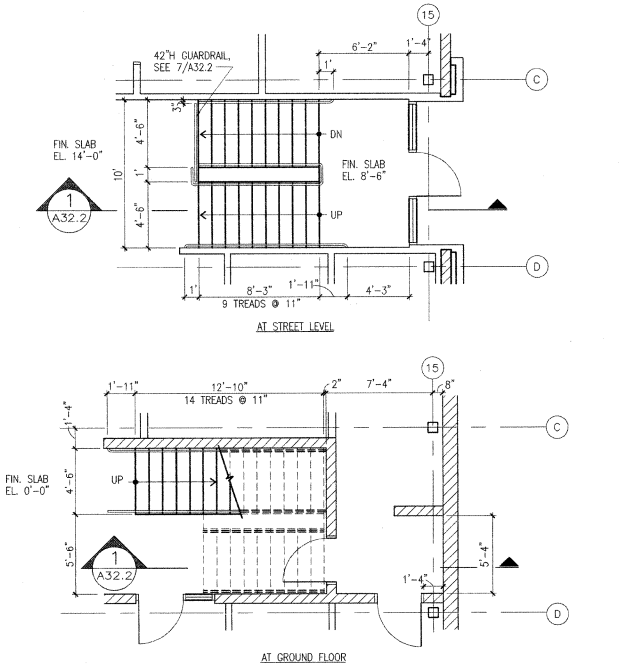

STAIR NO. 1 — 1 / A32.1 — 1/4"=1'-0"

AS-BUILT
Contract No BUS-443B
Date NOV. 2000

NOT USED — 5 / A32.1

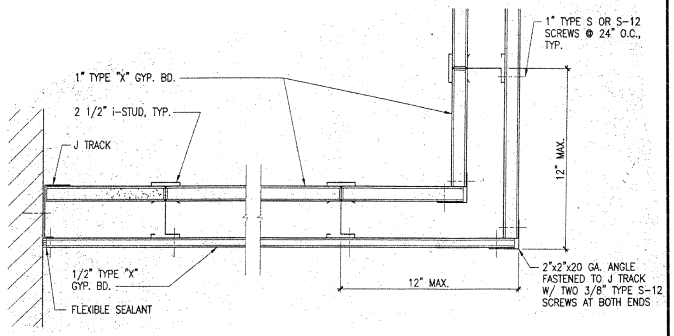

1-HOUR STAIR SHAFT WALL & SOFFIT — 4 / A32.1 — 3"=1'-0"

CONSTRUCTION CHANGE TABLE		
CHANGE	DATE	SHEET NUMBERS REVISED OR ADDED THIS CHANGE
4	9/17/00	2ndFL.

STV Incorporated
ENGINEERS/ARCHITECTS/PLANNERS/CONSTRUCTION MANAGERS
7055 WILSHIRE BOULEVARD, SUITE 1450
LOS ANGELES, CALIFORNIA 90017-2499

LICENSED ARCHITECT — C-24485 — STATE OF CALIFORNIA — RENEWAL DATE

DESIGNED BY	K. Kim	12/17/98
DRAWN BY	S. Escobar	12/17/98
CHECKED BY	M. Fernandes	12/17/98
MTDB PRJ. ENG.		

MTDB
Metropolitan Transit Development Board
1255 Imperial Avenue, Suite 1000, San Diego, Ca. 92101-7490 (619)231-1466

IMPERIAL AVENUE DIVISION
BUS MAINTENANCE FACILITY

ENLARGED STAIR PLANS AND DETAILS

SCALE	AS NOTED
MTDB CONTRACT NO.	BUS-443B
DRAWING NO.	A32.1
SHEET NO.	27

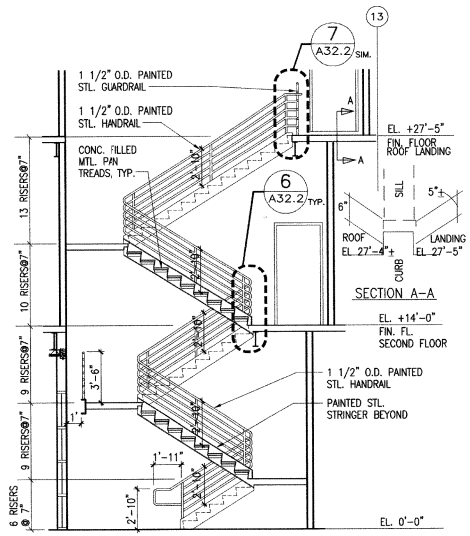

STAIR NO. 3 — 3 / A32.2
1/4"=1'-0"

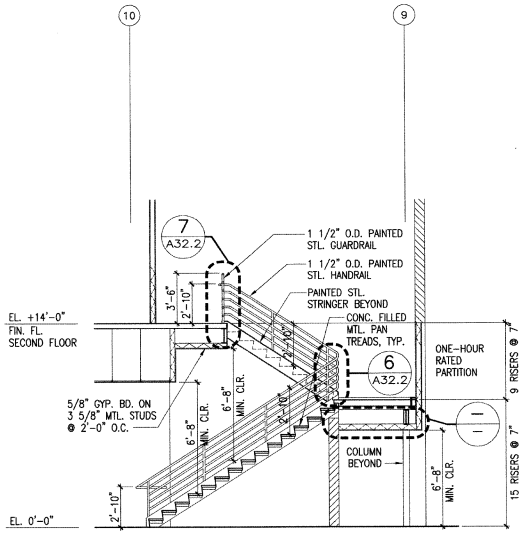

STAIR NO. 2 — 2 / A32.2
1/4"=1'-0"

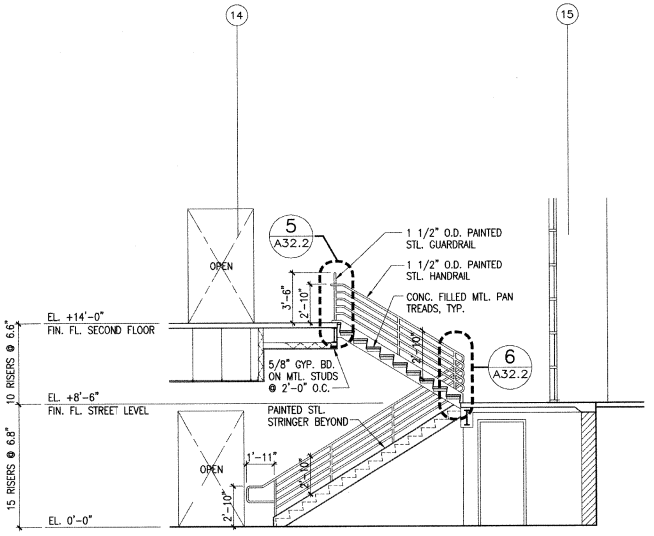

STAIR NO. 1 — 1 / A32.2
1/4"=1'-0"

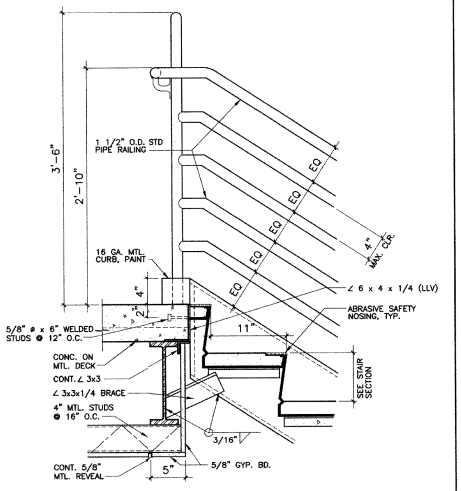

TOP LANDING — 7 / A32.2
1 1/2"=1'-0"

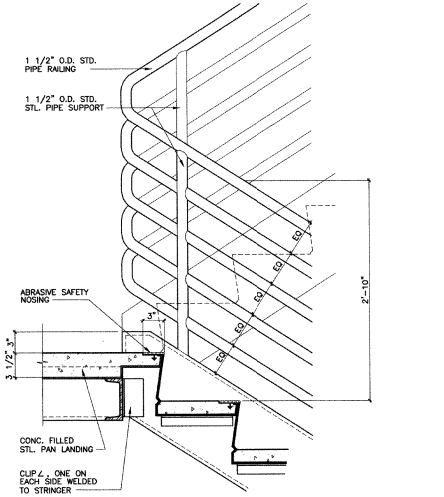

INTERMEDIATE LANDING — 6 / A32.2
1 1/2"=1'-0"

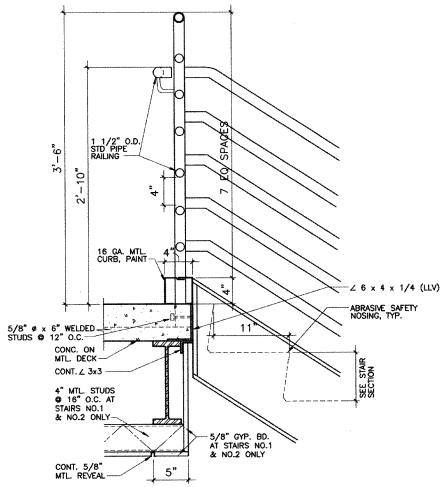

TOP LANDING — 5 / A32.2
1 1/2"=1'-0"

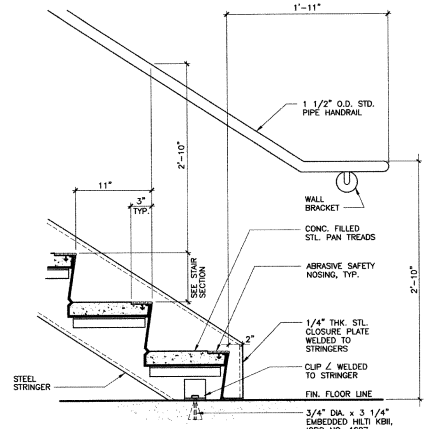

AS-BUILT
Contract No. BUS-443B
Date NOV. 2000

STAIR BASE — 4 / A32.2
1 1/2"=1'-0"

CONSTRUCTION CHANGE TABLE		
CHANGE	DATE	SHEET NUMBERS REVISED OR ADDED THIS CHANGE

STV Incorporated
ENGINEERS/ARCHITECTS/PLANNERS/CONSTRUCTION MANAGERS
1055 WILSHIRE BOULEVARD, SUITE 1455
LOS ANGELES, CALIFORNIA 90017-2499

LICENSED ARCHITECT — C-24485 — RENEWAL DATE — STATE OF CALIFORNIA

DESIGNED BY	K. Kim	12/17/98
DRAWN BY	S. Escobar	12/17/98
CHECKED BY	M. Fernandes	12/17/98
MTDB PRJ. ENG.		

MTDB
Metropolitan Transit Development Board
1255 Imperial Avenue, Suite 1000, San Diego, Ca. 92101-7490 (619)231-1466

IMPERIAL AVENUE DIVISION
BUS MAINTENANCE FACILITY

STAIR SECTIONS AND DETAILS

SCALE	AS NOTED
MTDB CONTRACT NO.	BUS-443B
DRAWING NO.	A32.2
SHEET NO.	28

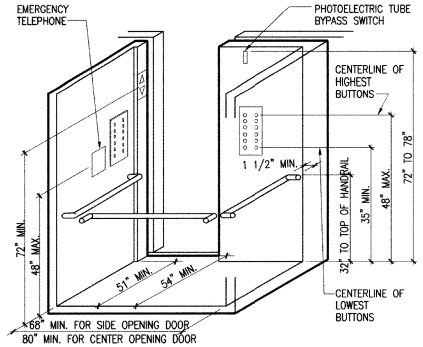

ELEVATOR MISC. DIMENSIONS

NOT TO SCALE

3 A32.3

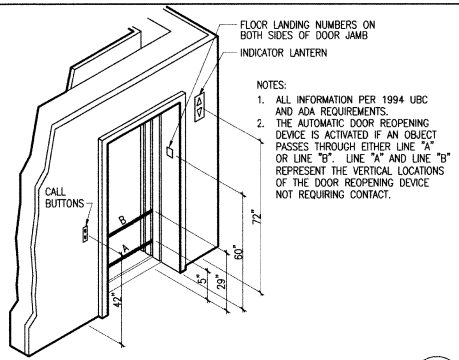

ELEVATOR MISC. DIMENSIONS

NOT TO SCALE

4 A32.3

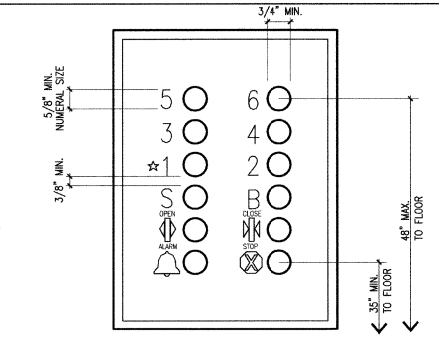

NOTE: ALL INFORMATION PER 1994 UBC AND ADA REQUIREMENTS.

ELEVATOR CONTROL

NOT TO SCALE

5 A32.3

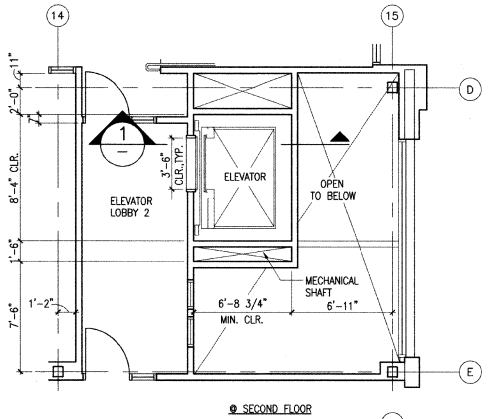

@ SECOND FLOOR

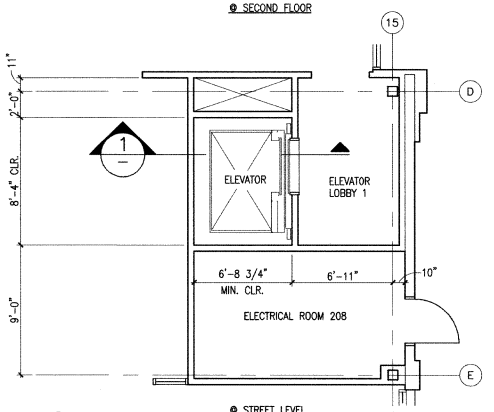

@ STREET LEVEL

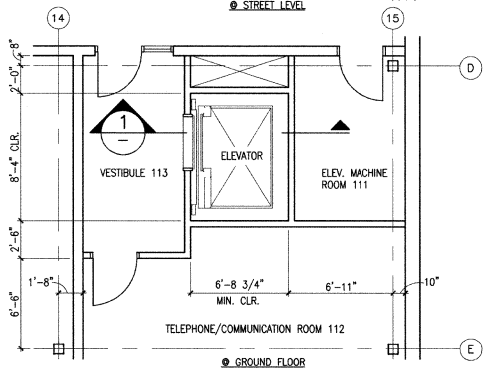

@ GROUND FLOOR

ENLARGED ELEVATOR PLANS

1/4" = 1'-0"

2 A32.3

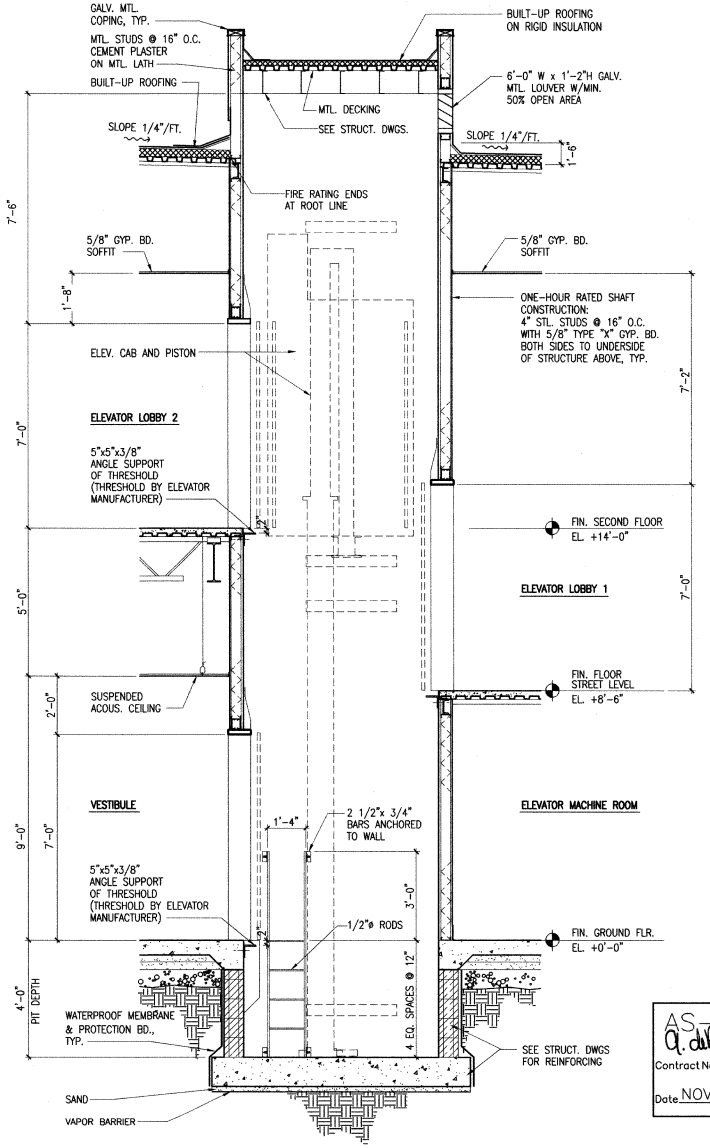

ELEVATOR SECTION

1/2" = 1'-0"

1 A32.3

AS BUILT
Q. deBrand
Contract No. BUS-443B
Date NOV. 2000

CONSTRUCTION CHANGE TABLE		
CHANGE	DATE	SHEET NUMBERS REVISED OR ADDED THIS CHANGE
1	4/97/00	ADDED FLOOR INTERIOR IMPROVEMENTS
2	6/5/00	DIMENSION CLARIFICATION

STV Incorporated
ENGINEERS & PLANNERS
1055 WILSHIRE BLVD., SUITE 1455
LOS ANGELES, CA. 90017

		DATE
DESIGNED BY	K. Kim	6/12/00
DRAWN BY	S. Escobar	6/12/00
CHECKED BY	M. Fernandes	6/12/00
MTDB PRJ. ENG.		

MTDB
Metropolitan Transit Development Board
1255 Imperial Avenue, Suite 1000, San Diego, Ca. 92101-7490 (619)231-1466

IMPERIAL AVENUE DIVISION
BUS MAINTENANCE FACILITY

ENLARGED ELEVATOR PLANS, SECTION AND DETAILS

SCALE	AS NOTED
MTDB CONTRACT NO.	
DRAWING NO. A32.3	SHEET NO. 29

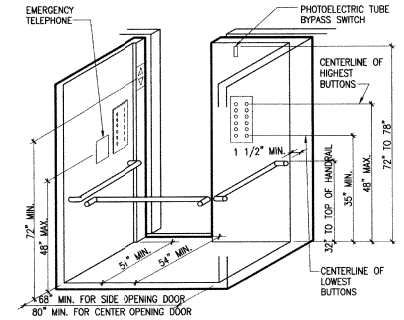

ELEVATOR MISC. DIMENSIONS

NOT TO SCALE

3 / A32.3

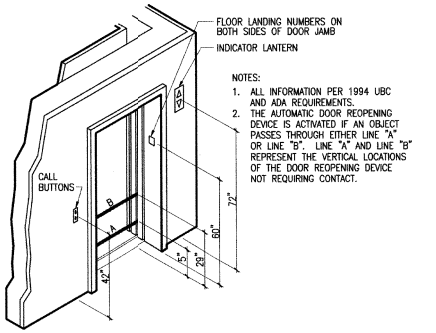

ELEVATOR MISC. DIMENSIONS

NOT TO SCALE

4 / A32.3

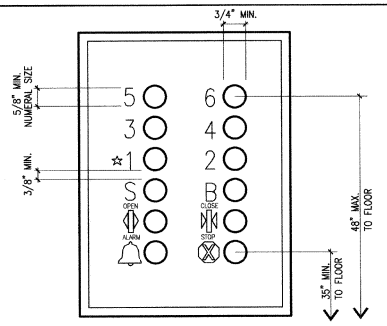

NOTE: ALL INFORMATION PER 1994 UBC AND ADA REQUIREMENTS.

ELEVATOR CONTROL

NOT TO SCALE

5 / A32.3

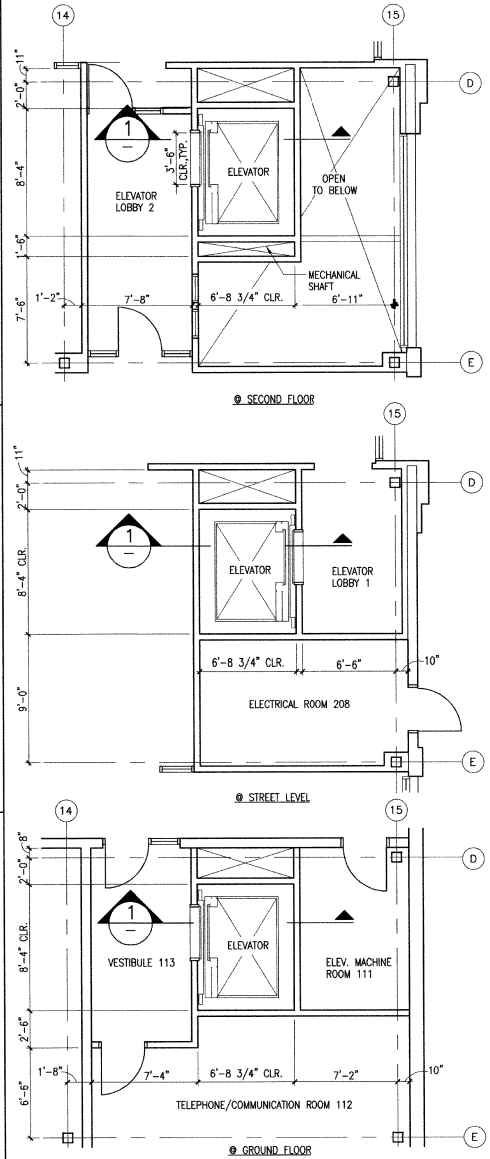

ENLARGED ELEVATOR PLANS

1/4" = 1'-0"

2 / A32.3

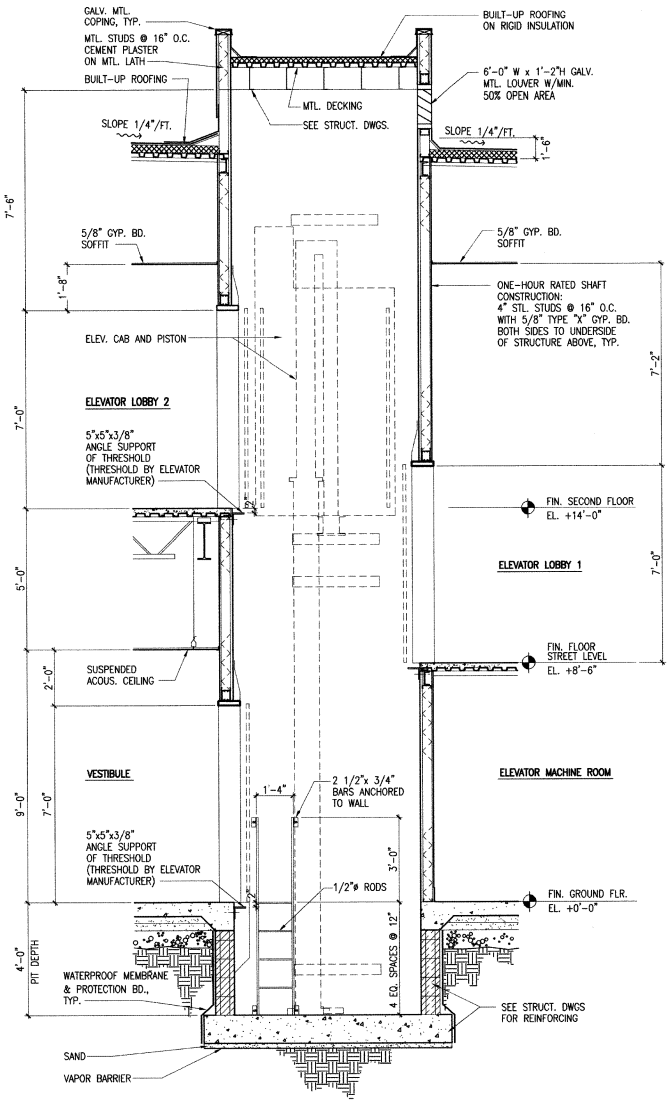

AS-BUILT
Contract No. BUS-443B
Date NOV. 2000

ELEVATOR SECTION

NONE

1 / A32.3

CONSTRUCTION CHANGE TABLE

CHANGE	DATE	SHEET NUMBERS REVISED OR ADDED THIS CHANGE
1	9/29/98	CHG DOOR SWING, RM 208

STV Incorporated
ENGINEERS/ARCHITECTS/PLANNERS/CONSTRUCTION MANAGERS
1055 WILSHIRE BOULEVARD, SUITE 1455
LOS ANGELES, CALIFORNIA 90017-2499

LICENSED ARCHITECT JOHN SOO KIM C-24485 RENEWAL DATE STATE OF CALIFORNIA

		DATE
DESIGNED BY	K. Kim	12/17/98
DRAWN BY	S. Escobar	12/17/98
CHECKED BY	M. Fernandes	12/17/98
MTDB PRJ. ENG.		

MTDB
Metropolitan Transit Development Board
1255 Imperial Avenue, Suite 1000, San Diego, Ca. 92101-7490 (619)231-1466

IMPERIAL AVENUE DIVISION
BUS MAINTENANCE FACILITY

ENLARGED ELEVATOR PLANS, SECTION AND DETAILS

SCALE	AS NOTED
MTDB CONTRACT NO.	BUS-443B
DRAWING NO.	A32.3
SHEET NO.	29

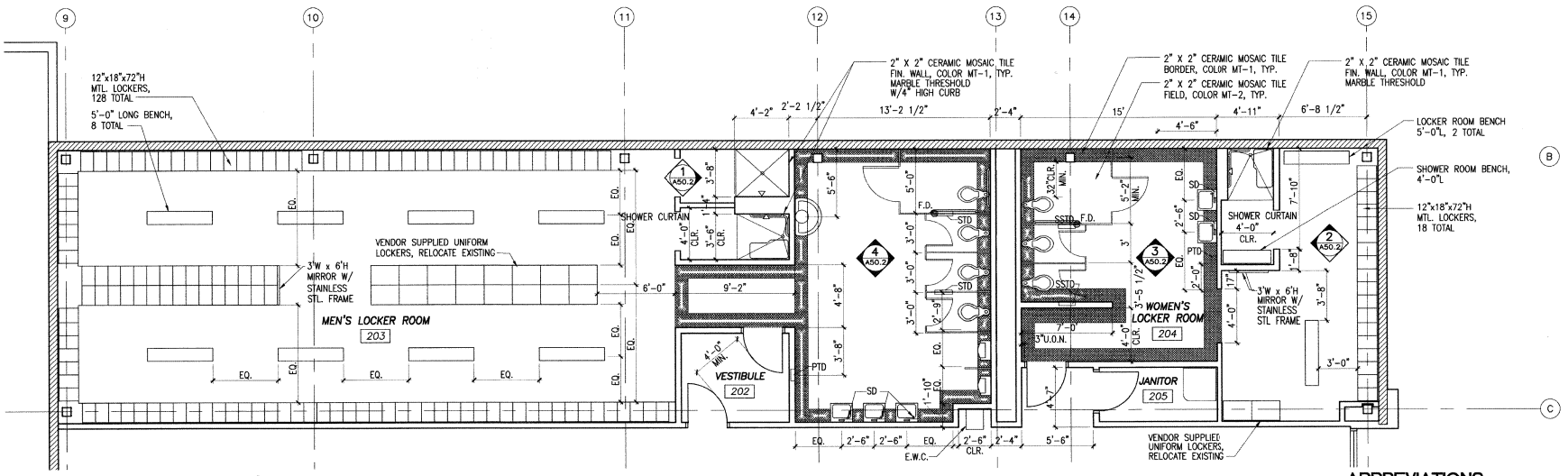

MEN'S & WOMEN'S LOCKER ROOMS ENLARGED PLAN — 1/4"=1'-0" — 1 / A32.4

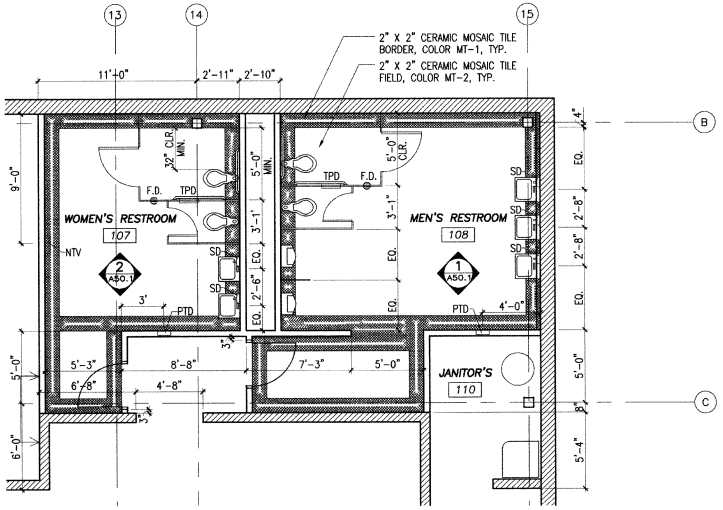

WOMEN'S & MEN'S RESTROOMS ENLARGED PLAN — 1/4"=1'-0" — 2 / A32.4

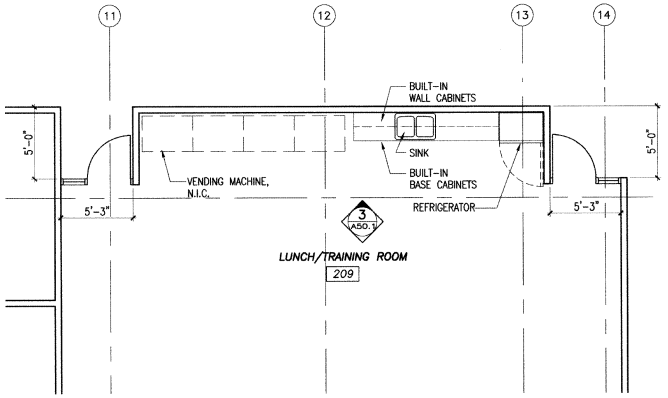

LUNCH/TRAINING ROOM ENLARGED PLAN — 1/4"=1'-0" — 3 / A32.4

ABBREVIATIONS

SD	SOAP DISPENSER
PTD	PAPER TOWEL DISPENSER
NTV	NAPKIN/TAMPON VENDOR
STD	SEAT COVER AND TOILET TISSUE DISPENSER
SSTD	SEAT COVER, TOILET TISSUE DISPENSER AND SANITARY NAPKIN DISPOSAL
F.D.	FLOOR DRAIN

NOTES:

1. WATER CLOSET COMPARTMENTS SHALL BE EQUIPPED WITH A DOOR THAT HAS AN AUTOMATIC-CLOSING DEVICE, AND SHALL HAVE A CLEAR, UNOBSTRUCTED OPENING WIDTH OF 32" WHEN LOCATED AT THE END AND 34" WHEN LOCATED AT THE SIDE WITH THE DOOR POSITIONED AT AN ANGLE OF 90 DEGREES FROM ITS CLOSED POSITION.
2. WHEN STANDARD COMPARTMENT DOORS ARE USED, WITH A MIN. 9" CLEARANCE FOR WHEELCHAIR FOOTRESTS UNDERNEATH AND A SELF-CLOSING DEVICE, CLEARANCE AT THE STRIKE EDGE IS NOT REQUIRED.
3. THE INSIDE AND OUTSIDE OF THE COMPARTMENT DOOR SHALL BE EQUIPPED WITH A LOOP OR U-SHAPED HANDLE IMMEDIATELY BELOW THE LATCH. THE LATCH SHALL BE FLIP-OVER STYLE, SLIDING, OR OTHER HARDWARE NOT REQUIRING THE USER TO GRASP OR TWIST.
4. EXCEPT FOR DOOR OPENING WIDTHS AND DOOR SWINGS, A CLEAR, UNOBSTRUCTED ACCESS NOT LESS THAN 44" SHALL BE PROVIDED TO WATER CLOSET COMPARTMENTS DESIGNED FOR USE BY PERSONS WITH DISABILITIES AND THE SPACE IMMEDIATELY IN FRONT OF A WATER CLOSET COMPARTMENT SHALL BE NOT LESS THAN 48" AS MEASURED AT A RIGHT ANGLE TO COMPARTMENT DOOR IN ITS CLOSED POSITION.
5. THRESHOLDS OR RECESSED DROPS AT COMPARTMENT SHOWERS SHALL BE A MAX OF 1/2" IN HEIGHT AND SHALL BE BEVELED OR SLOPED AT AN ANGLE NOT EXCEEDING 45 DEGREES FROM THE HORIZONTAL.
6. COMPARTMENT SHOWER FLOORS SHALL SLOPE TOWARD THE REAR TO A DRAIN LOCATED 6" OF THE REAR WALL, WITH A MAX. FLOOR SLOPE OF 1/2" PER FOOT IN ANY DIRECTION. THE FLOOR SURFACES SHALL BE A CARBORUNDUM OR GRIT-FACED TILE OR OF MATERIAL PROVIDING EQUIVALENT SLIP-RESISTANT.

AS-BUILT
Contract No BUS-443B
Date NOV. 2000

CONSTRUCTION CHANGE TABLE		
CHANGE	DATE	SHEET NUMBERS REVISED OR ADDED THIS CHANGE

STV Incorporated
ENGINEERS/ARCHITECTS/PLANNERS/CONSTRUCTION MANAGERS
1055 WILSHIRE BOULEVARD, SUITE 1455
LOS ANGELES, CALIFORNIA 90017-2499

LICENSED ARCHITECT — TOM SOO KIM — C-24485 — RENEWAL DATE — STATE OF CALIFORNIA

DESIGNED BY	K. Kim	DATE 12/17/98
DRAWN BY	S. Escobar	12/17/98
CHECKED BY	M. Fernandes	12/17/98
MTDB PRJ. ENG.		

MTDB
Metropolitan Transit Development Board
1255 Imperial Avenue, Suite 1000, San Diego, Ca. 92101-7490 (619)231-1466

IMPERIAL AVENUE DIVISION
BUS MAINTENANCE FACILITY

ENLARGED PLANS

SCALE	1/4"=1'-0"
MTDB CONTRACT NO.	BUS-443B
DRAWING NO.	A32.4
SHEET NO.	30

KEYNOTES

5. METALS

5.1 PAINTED STEEL STRUCTURE
5.2 PAINTED STEEL HANDRAIL
5.3 PAINTED STEEL PLATE
5.4 PAINTED STEEL BRACING
5.5 PAINTED STEEL LADDER
5.6 PAINTED STEEL GUARDRAIL
5.7 PAINTED STEEL CAGE
5.8 PAINTED STEEL PAN STAIR
5.9 METAL DECK
5.10 LOAD-BEARING METAL STUD FRAMING
5.11 SAFETY NOSING
5.12 METAL LOUVER

9. FINISHES

9.1 METAL LATH AND CEMENT PLASTER
9.2 GYPSUM WALLBOARD
9.3 PAINTED FINISH
9.4 SUSPENDED ACOUSTICAL CEILING SYSTEM
9.5 SUSPENDED GYPSUM BOARD CEILING
9.6 CERAMIC TILE
9.7 BASE
9.8 METAL STUDS
9.9 VINYL TILE FLOORING

10. SPECIALTIES

10.1 SOLID PHENOLIC TOILET COMPARTMENT
10.2 COMBINATION SEAT COVER DISPENSER AND TOILET TISSUE DISPENSER, SERVE TWO SIDES
10.3 STAINLESS STEEL FRAMED MIRROR, 7'-6"W x 3'-0"H
10.4 SOAP DISPENSER
10.5 RECESSED PAPER TOWEL DISPENSER / WASTE RECEPTACLE
10.6 SOLID PHENOLIC URINAL SCREEN
10.7 STAINLESS STEEL GRAB BAR
10.8 SANITARY NAPKIN / TAMPON VENDOR, SURFACE MOUNTED
10.9 COMBINATION SEAT COVER DISPENSER, SANITARY NAPKIN DISPOSAL, AND TOILET TSSUE DISPENSER, SERVE TWO SIDES
10.10 STAINLESS STEEL FRAMED MIRROR, 5'-0"W x 3'-0"H
10.11 MOP AND BROOM HOLDERS AND RAG HOOKS
10.12 COMBINATION SEAT COVER DISPENSER, SANITARY NAPKIN DISPOSAL, AND TOILET TSSUE DISPENSER, RECESSED

ABBREVIATIONS

SD	SOAP DISPENSER
PTD	PAPER TOWEL DISPENSER
NTV	NAPKIN/TAMPON VENDOR
STD	SEAT COVER AND TOILET TISSUE DISPENSER
SSTD	SEAT COVER, TOILET TISSUE DISPENSER AND SANITARY NAPKIN DISPOSAL
F.D.	FLOOR DRAIN

NOTES:

1. WATER CLOSET COMPARTMENTS SHALL BE EQUIPPED WITH A DOOR THAT HAS AN AUTOMATIC-CLOSING DEVICE, AND SHALL HAVE A CLEAR, UNOBSTRUCTED OPENING WIDTH OF 32" WHEN LOCATED AT THE END AND 34" WHEN LOCATED AT THE SIDE WITH THE DOOR POSITIONED AT AN ANGLE OF 90 DEGREES FROM ITS CLOSED POSITION.
2. WHEN STANDARD COMPARTMENT DOORS ARE USED, WITH A MIN. 9" CLEARANCE FOR WHEELCHAIR FOOTRESTS UNDERNEATH AND A SELF-CLOSING DEVICE, CLEARANCE AT THE STRIKE EDGE IS NOT REQUIRED.
3. THE INSIDE AND OUTSIDE OF THE COMPARTMENT DOOR SHALL BE EQUIPPED WITH A LOOP OR U-SHAPED HANDLE IMMEDIATELY BELOW THE LATCH. THE LATCH SHALL BE FLIP-OVER STYLE, SLIDING, OR OTHER HARDWARE NOT REQUIRING THE USER TO GRASP OR TWIST.
4. EXCEPT FOR DOOR OPENING WIDTHS AND DOOR SWINGS, A CLEAR, UNOBSTRUCTED ACCESS NOT LESS THAN 44" SHALL BE PROVIDED TO WATER CLOSET COMPARTMENTS DESIGNED FOR USE BY PERSONS WITH DISABILITIES AND THE SPACE IMMEDIATELY IN FRONT OF A WATER CLOSET COMPARTMENT SHALL BE NOT LESS THAN 48" AS MEASURED AT A RIGHT ANGLE TO COMPARTMENT DOOR IN ITS CLOSED POSITION.
5. THRESHOLDS OR RECESSED DROPS AT COMPARTMENT SHOWERS SHALL BE A MAX OF 1/2" IN HEIGHT AND SHALL BE BEVELED OR SLOPED AT AN ANGLE NOT EXCEEDING 45 DEGREES FROM THE HORIZONTAL.
6. COMPARTMENT SHOWER FLOORS SHALL SLOPE TOWARD THE REAR TO A DRAIN LOCATED 6" OF THE REAR WALL, WITH A MAX. FLOOR SLOPE OF 1/2" PER FOOT IN ANY DIRECTION. THE FLOOR SURFACES SHALL BE A CARBORUNDUM OR GRIT-FACED TILE OR OF MATERIAL PROVIDING EQUIVALENT SLIP-RESISTANT.

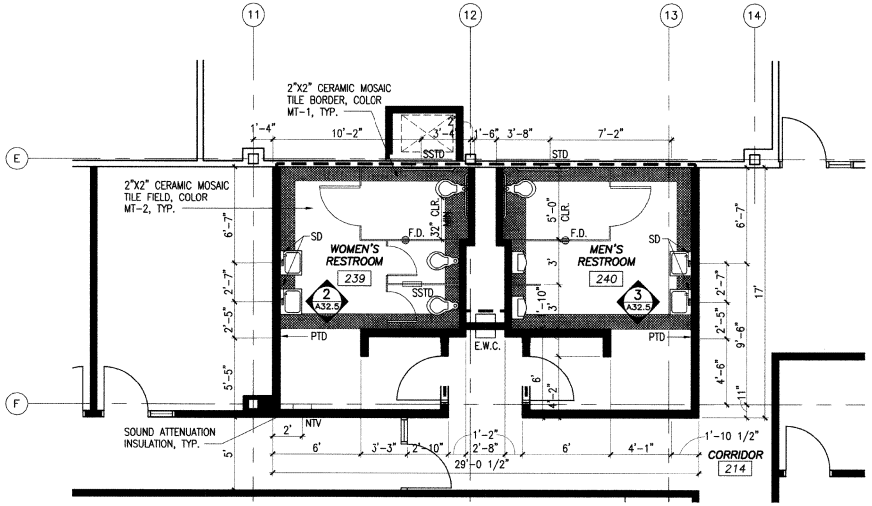

MEN'S AND WOMEN'S RESTROOMS ENLARGED PLAN
1/4"=1'-0"
1 A32.5

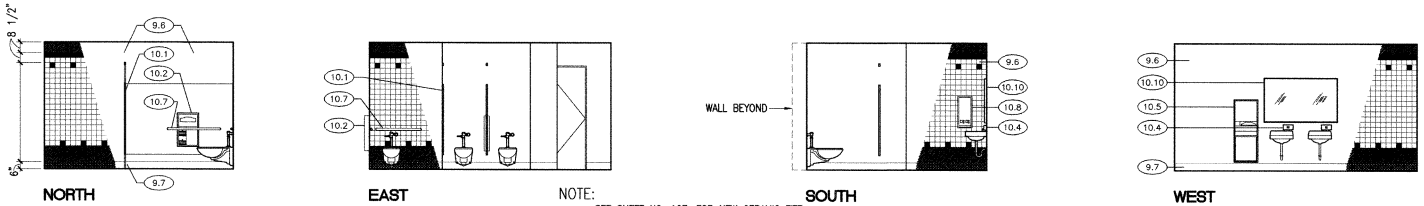

NOTE:
SEE SHEET NO. 107, FOR NEW CERAMIC TITE

WOMEN'S RESTROOM 239 INTERIOR ELEVATIONS
1/4"=1'-0"
2 A32.5

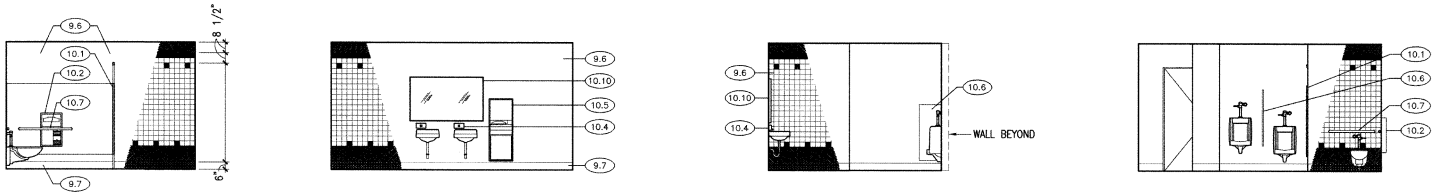

AS-BUILT
Contract No. BUS-443B
Date NOV. 2000

MEN'S RESTROOM 240 INTERIOR ELEVATIONS
1/4"=1'-0"
3 A32.5

CONSTRUCTION CHANGE TABLE		
CHANGE	DATE	SHEET NUMBERS REVISED OR ADDED THIS CHANGE
1	4/17/00	SECOND FLOOR INTERIOR IMPROVEMENTS

STV Incorporated
ENGINEERS/ARCHITECTS/PLANNERS/CONSTRUCTION MANAGERS
1055 WILSHIRE BOULEVARD, SUITE 1455
LOS ANGELES, CALIFORNIA 90017-2499

DESIGNED BY	K. Kim	DATE 6/12/00
DRAWN BY	S. Escobar	6/12/00
CHECKED BY	M. Fernandes	6/12/00
MTDB PRJ. ENG.		

MTDB
Metropolitan Transit Development Board
1255 Imperial Avenue, Suite 1000, San Diego, Ca. 92101-7490 (619)231-1466

IMPERIAL AVENUE DIVISION
BUS MAINTENANCE FACILITY

ENLARGED PLAN AND ELEVATIONS

SCALE 1/4"=1'-0"
MTDB CONTRACT NO. BUS-443B
DRAWING NO. A32.5
SHEET NO. 30A

KEYNOTES

5. METALS

5.1 PAINTED STEEL STRUCTURE
5.2 PAINTED STEEL HANDRAIL
5.3 PAINTED STEEL PLATE
5.4 PAINTED STEEL BRACING
5.5 PAINTED STEEL LADDER
5.6 PAINTED STEEL GUARDRAIL
5.7 PAINTED STEEL CAGE
5.8 PAINTED STEEL PAN STAIR
5.9 METAL DECK
5.10 LOAD-BEARING METAL STUD FRAMING
5.11 SAFETY NOSING
5.12 METAL LOUVER

9. FINISHES

9.1 METAL LATH AND CEMENT PLASTER
9.2 GYPSUM WALLBOARD
9.3 PAINTED FINISH
9.4 SUSPENDED ACOUSTICAL CEILING SYSTEM
9.5 SUSPENDED GYPSUM BOARD CEILING
9.6 CERAMIC TILE
9.7 BASE
9.8 METAL STUDS
9.9 VINYL TILE FLOORING

10. SPECIALTIES

10.1 SOLID PHENOLIC TOILET COMPARTMENT
10.2 COMBINATION SEAT COVER DISPENSER AND TOILET TISSUE DISPENSER, SERVE TWO SIDES
10.3 STAINLESS STEEL FRAMED MIRROR, 7'-6"W x 3"-0"H
10.4 SOAP DISPENSER
10.5 RECESSED PAPER TOWEL DISPENSER / WASTE RECEPTACLE
10.6 SOLID PHENOLIC URINAL SCREEN
10.7 STAINLESS STEEL GRAB BAR
10.8 SANITARY NAPKIN / TAMPON VENDOR, SURFACE MOUNTED
10.9 COMBINATION SEAT COVER DISPENSER, SANITARY NAPKIN DISPOSAL, AND TOILET TISSUE DISPENSER, SERVE TWO SIDES
10.10 STAINLESS STEEL FRAMED MIRROR, 5'-0"W x 3'-0"H
10.11 MOP AND BROOM HOLDERS AND RAG HOOKS
10.12 COMBINATION SEAT COVER DISPENSER, SANITARY NAPKIN DISPOSAL, AND TOILET TISSUE DISPENSER, RECESSED

ABBREVIATONS

SD	SOAP DISPENSER
PTD	PAPER TOWEL DISPENSER
NTV	NAPKIN/TAMPON VENDOR
STD	SEAT COVER AND TOILET TISSUE DISPENSER
SSTD	SEAT COVER, TOILET TISSUE DISPENSER AND SANITARY NAPKIN DISPOSAL
F.D.	FLOOR DRAIN

NOTES:

1. WATER CLOSET COMPARTMENTS SHALL BE EQUIPPED WITH A DOOR THAT HAS AN AUTOMATIC-CLOSING DEVICE, AND SHALL HAVE A CLEAR, UNOBSTRUCTED OPENING WIDTH OF 32" WHEN LOCATED AT THE END AND 34" WHEN LOCATED AT THE SIDE WITH THE DOOR POSITIONED AT AN ANGLE OF 90 DEGREES FROM ITS CLOSED POSITION.

2. WHEN STANDARD COMPARTMENT DOORS ARE USED, WITH A MIN. 9" CLEARANCE FOR WHEELCHAIR FOOTRESTS UNDERNEATH AND A SELF-CLOSING DEVICE, CLEARANCE AT THE STRIKE EDGE IS NOT REQUIRED.

3. THE INSIDE AND OUTSIDE OF THE COMPARTMENT DOOR SHALL BE EQUIPPED WITH A LOOP OR U-SHAPED HANDLE IMMEDIATELY BELOW THE LATCH. THE LATCH SHALL BE FLIP-OVER STYLE, SLIDING, OR OTHER HARDWARE NOT REQUIRING THE USER TO GRASP OR TWIST.

4. EXCEPT FOR DOOR OPENING WIDTHS AND DOOR SWINGS, A CLEAR, UNOBSTRUCTED ACCESS NOT LESS THAN 44" SHALL BE PROVIDED TO WATER CLOSET COMPARTMENTS DESIGNED FOR USE BY PERSONS WITH DISABILITIES AND THE SPACE IMMEDIATELY IN FRONT OF A WATER CLOSET COMPARTMENT SHALL BE NOT LESS THAN 48" AS MEASURED AT A RIGHT ANGLE TO COMPARTMENT DOOR IN ITS CLOSED POSITION.

5. THRESHOLDS OR RECESSED DROPS AT COMPARTMENT SHOWERS SHALL BE A MAX OF 1/2" IN HEIGHT AND SHALL BE BEVELED OR SLOPED AT AN ANGLE NOT EXCEEDING 45 DEGREES FROM THE HORIZONTAL.

6. COMPARTMENT SHOWER FLOORS SHALL SLOPE TOWARD THE REAR TO A DRAIN LOCATED 6" OF THE REAR WALL, WITH A MAX. FLOOR SLOPE OF 1/2" PER FOOT IN ANY DIRECTION. THE FLOOR SURFACES SHALL BE A CARBORUNDUM OR GRIT-FACED TILE OR OF MATERIAL PROVIDING EQUIVALENT SLIP-RESISTANT.

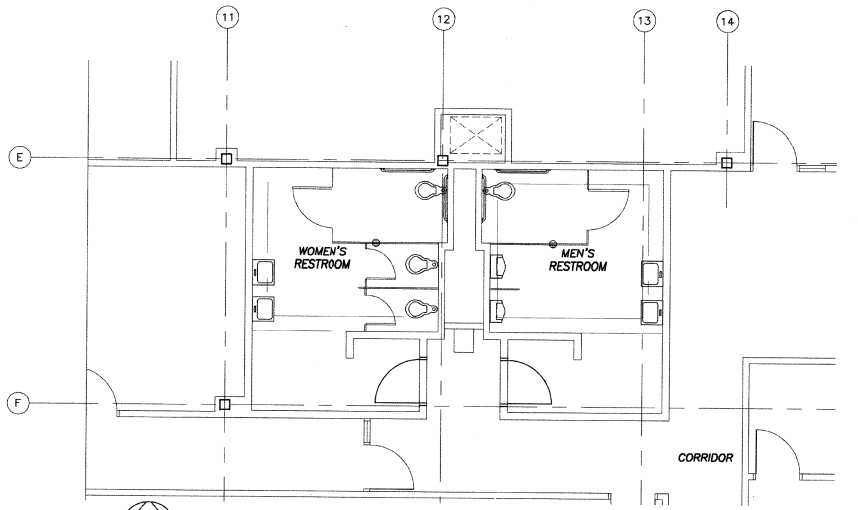

MEN'S AND WOMEN'S RESTROOMS ENLARGED PLAN 1/4"=1'-0" — 1 / A32.5

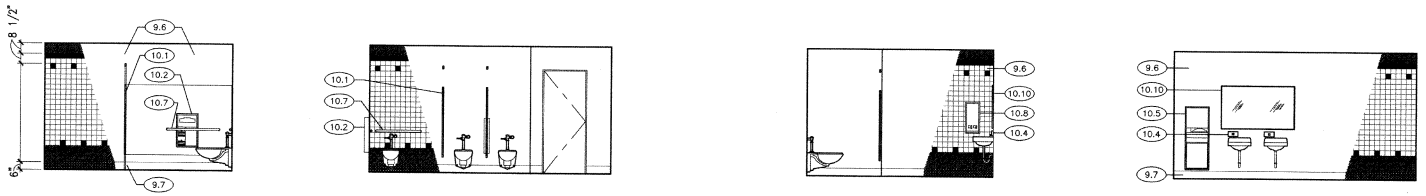

WOMEN'S RESTROOM 239 INTERIOR ELEVATIONS 1/4"=1'-0" — 2 / A32.5

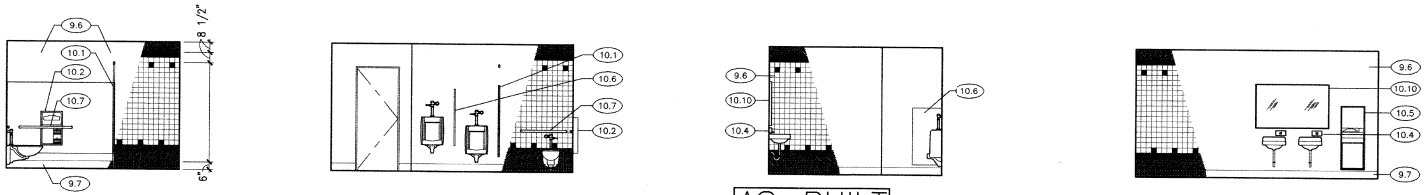

AS-BUILT
Contract No. BUS-4438
Date NOV. 2000

MEN'S RESTROOM 240 INTERIOR ELEVATIONS 1/4"=1'-0"

CONSTRUCTION CHANGE TABLE		
CHANGE	DATE	SHEET NUMBERS REVISED OR ADDED THIS CHANGE
4	4/17/00	SECOND FLOOR INTERIOR IMPROVEMENTS

STV Incorporated
ENGINEERS & PLANNERS
1055 WILSHIRE BLVD., SUITE 1455
LOS ANGELES, CA. 90017

DESIGNED BY	K. Kim	4/17/00
DRAWN BY	S. Escobar	4/17/00
CHECKED BY	M. Fernandes	4/17/00
MTDB PRJ. ENG.		

MTDB
Metropolitan Transit Development Board
1255 Imperial Avenue, Suite 1000, San Diego, Ca. 92101-7490 (619)231-1466

IMPERIAL AVENUE DIVISION
BUS MAINTENANCE FACILITY

ENLARGED PLAN AND ELEVATIONS

SCALE 1/4"=1'-0"
MTDB CONTRACT NO.
DRAWING NO. A32.5
SHEET NO. 30A

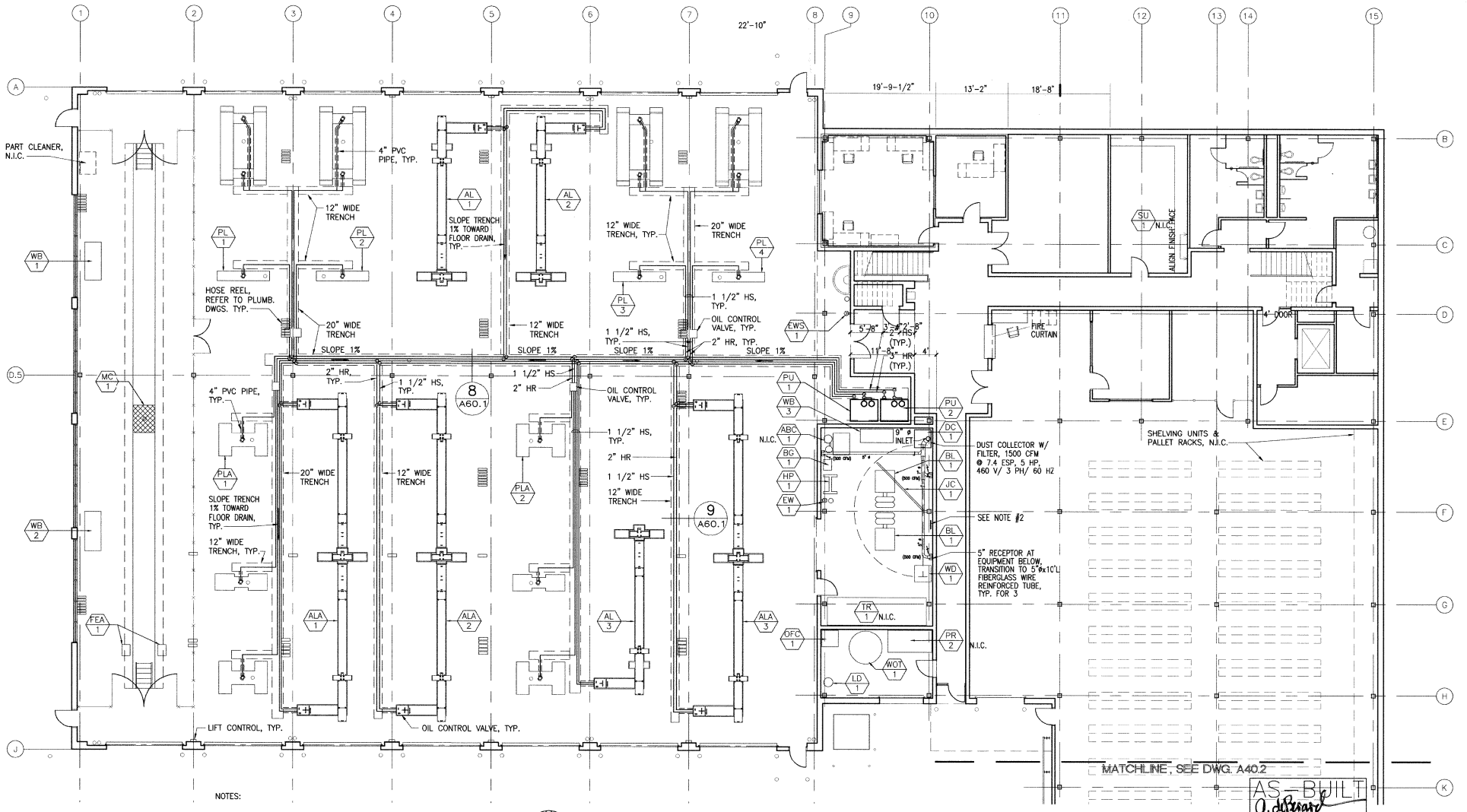

NOTES:

1. SEE DRAWING A40.2 FOR EQUIPMENT SCHEDULE.
2. POST A PERMANENT SIGN STATING "MAXIMUM WEIGHT LIMIT FOR THE CRANE SHALL NOT EXCEED 1,000 LBS.

PARTIAL GROUND FLOOR EQUIPMENT PLAN 1/A40.1

1/8"=1'-0"

AS-BUILT
Contract No BUS-443B
Date NOV. 2000

CONSTRUCTION CHANGE TABLE		
CHANGE	DATE	SHEET NUMBERS REVISED OR ADDED THIS CHANGE
1	6/28/99	ADDENDUM NO. 1

STV Incorporated
ENGINEERS/ARCHITECTS/PLANNERS/CONSTRUCTION MANAGERS
1055 WILSHIRE BOULEVARD, SUITE 1455
LOS ANGELES, CALIFORNIA 90017-2499

LICENSED ARCHITECT TUN SOO KIM C-24485 RENEWAL DATE STATE OF CALIFORNIA

		DATE
DESIGNED BY	K. Kim	12/17/98
DRAWN BY	S. Escobar	12/17/98
CHECKED BY	M. Fernandes	12/17/98
MTDB PRJ. ENG.		

MTDB
Metropolitan Transit Development Board
1255 Imperial Avenue, Suite 1000, San Diego, Ca. 92101-7490 (619)231-1466

IMPERIAL AVENUE DIVISION
BUS MAINTENANCE FACILITY

EQUIPMENT PLAN

SCALE 1/18"=1'-0"
MTDB CONTRACT NO. BUS-443B
DRAWING NO. A40.1
SHEET NO. 31

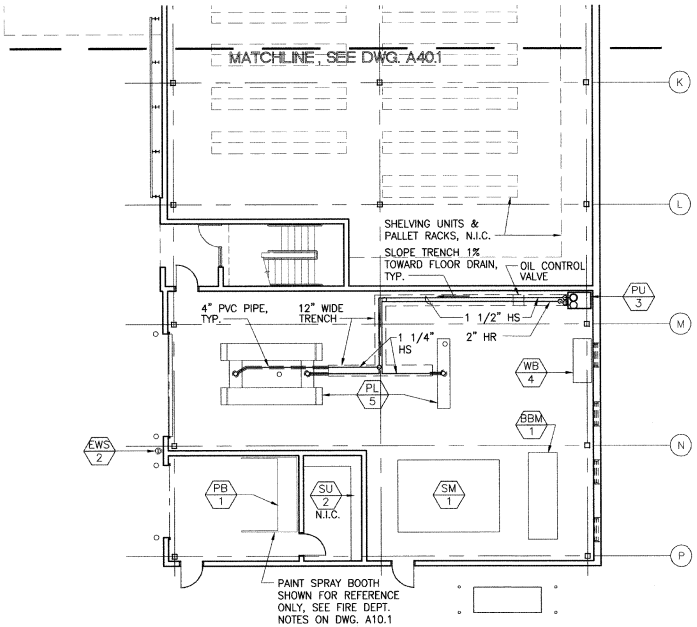

PARTIAL GROUND FLOOR EQUIPMENT PLAN

1/8"=1'-0"

1 / A40.2

EQUIPMENT SCHEDULE

EQUIPMENT TYPE	LOCATION	DESCRIPTION	REMARKS
AL	MAINTENANCE/REPAIR	LIFT, AXLE, TWO-POST ADJUSTABLE	
ALA		LIFT, AXLE, THREE-POST ADJUSTABLE	
PL		LIFT, PLATFORM, TWO-POST	
PLA		LIFT, PLATFORM, THREE-POST	
PU		LIFT POWER UNITS	
WB		WORK BENCH	
FEA		FRONT END ALIGNMENT	RELOCATE EXIST.
MC		MOVABLE CROSSOVER	
EWS		EMERGENCY EYE WASH & SHOWER	SEE PLUMB. DWG.
JC	BRAKE ROOM	JIB CRANE	
BL		BRAKE LATHE	RELOCATE EXIST.
ABC		ABRASIVE BLAST CABINET	SEE NOTE 5
DC		DUST COLLECTOR	
HP		80 TON HYDRAULIC PRESS	RELOCATE EXIST.
BG		BUFFER/GRINDER	
WB		WORK BENCH	
WD		WHEEL DOLLY	RELOCATE EXIST.
TR		TIRE RACK, 5'Dx18'L	SEE NOTE 5
EW		EMERGENCY EYE WASH, PORTABLE	SEE PLUMB. DWG.
OFC	DRUM STORAGE	OIL FILTER CRUSHER	RELOCATE EXIST.
LD		LUBE DRUM W/ PUMP	SEE PLUMB. DWG. AND SPECIFICATIONS
PR		4'x8' PALLET RACK	SEE NOTE 5
WOT		WASTE OIL TANK, 1000 GAL.	RELOCATE EXIST.
SU	SHOP TOOLS	SHELVING UNITS	SEE NOTE 5
PL	BODY SHOP	LIFT, PLATFORM	
BBM		BRAKE BENDING MACHINE	RELOCATE EXIST.
SM		SHEAR MACHINE	RELOCATE EXIST.
WB		WORK BENCH	
PU		LIFT POWER UNIT	
PB	PAINT SHOP	PAINT BOOTH	
SU	PAINT STORAGE	SHELVING UNITS	SEE NOTE 5

EQUIPMENT TYPE	LOCATION	DESCRIPTION	REMARKS
EWS	EXTERIOR	EMERGENCY EYE WASH & SHOWER	SEE PLUMB. DWG.
LK	LOCKER ROOMS	12"Wx18"Dx72"H METAL LOCKER	
ULK		VENDOR SUPPLIED UNIFORM LOCKER	RELOCATE EXIST.
BH		BENCH	

NOTES:

1. EXISTING OWNER SUPPLIED EQUIPMENT TO BE RELOCATED AND INSTALLED WITH ALL UTILITIES BY CONTRACTOR
2. VERIFY EXACT LOCATION OF EQUIPMENT WITH THE OWNER.
3. REFER TO PLUMBING DRAWINGS FOR ADDITIONAL EQUIPMENT INFORMATION.
4. TEMPORARY ONSITE STORAGE SHALL BE PROVIDED BY SDTC FOR EXISTING EQUIPMENT DESIGNATED FOR RELOCATION.
5. EQUIPMENT BY OTHERS. NOT IN CONTRACT.

ABBREVIATIONS

HR	HYDRAULIC RETURN OIL
HS	HYDRAULIC SUPPLY OIL

AS-BUILT
Q. deBrauwere
Contract No. BUS-443B
Date NOV. 2000

CONSTRUCTION CHANGE TABLE

CHANGE	DATE	SHEET NUMBERS REVISED OR ADDED THIS CHANGE
1	6/28/99	ADDENDUM NO. 1

STV Incorporated
ENGINEERS/ARCHITECTS/PLANNERS/CONSTRUCTION MANAGERS
1055 WILSHIRE BOULEVARD, SUITE 1455
LOS ANGELES, CALIFORNIA 90017-2499

LICENSED ARCHITECT C-24485 RENEWAL DATE STATE OF CALIFORNIA

		DATE
DESIGNED BY	K. Kim	12/17/98
DRAWN BY	S. Escobar	12/17/98
CHECKED BY	M. Fernandes	12/17/98
MTDB PRJ. ENG.		

MTDB
Metropolitan Transit Development Board
1255 Imperial Avenue, Suite 1000, San Diego, Ca. 92101-7490 (619)231-1466

IMPERIAL AVENUE DIVISION
BUS MAINTENANCE FACILITY

EQUIPMENT PLAN AND SCHEDULE

SCALE	1/8"=1'-0"
MTDB CONTRACT NO.	BUS-443B
DRAWING NO.	A40.2
SHEET NO.	32

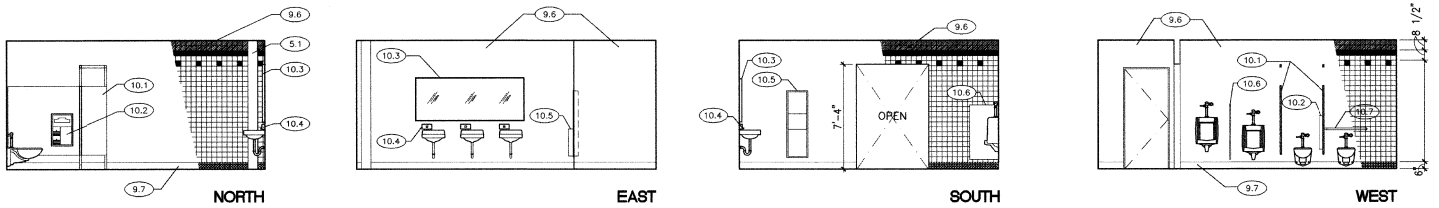

MEN'S RESTROOM 108 INTERIOR ELEVATIONS 1/4"=1'-0" (1 / A50.1)

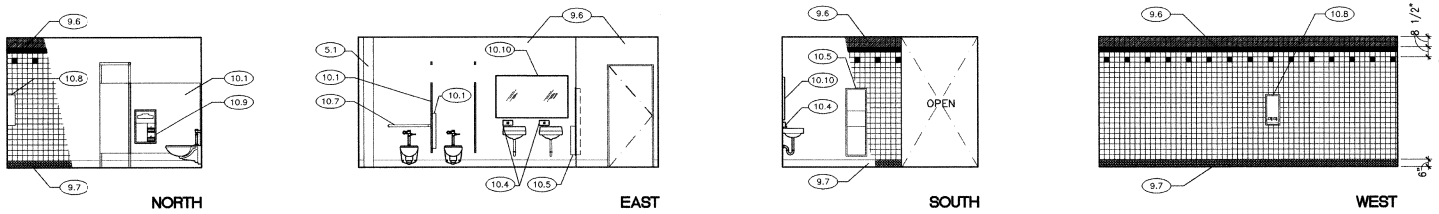

WOMEN'S RESTROOM 107 INTERIOR ELEVATIONS 1/4"=1'-0" (2 / A50.1)

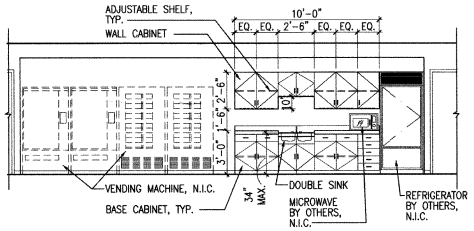

LUNCH/TRAINING ROOM 209 INTERIOR ELEVATION 1/4"=1'-0" (3 / A50.1)

KEYNOTES

5. METALS
- 5.1 PAINTED STEEL STRUCTURE
- 5.2 PAINTED STEEL HANDRAIL
- 5.3 PAINTED STEEL PLATE
- 5.4 PAINTED STEEL BRACING
- 5.5 PAINTED STEEL LADDER
- 5.6 PAINTED STEEL GUARDRAIL
- 5.7 PAINTED STEEL CAGE
- 5.8 PAINTED STEEL PAN STAIR
- 5.9 METAL DECK
- 5.10 LOAD-BEARING METAL STUD FRAMING
- 5.11 SAFETY NOSING
- 5.12 METAL LOUVER

9. FINISHES
- 9.1 METAL LATH AND CEMENT PLASTER
- 9.2 GYPSUM WALLBOARD
- 9.3 PAINTED FINISH
- 9.4 SUSPENDED ACOUSTICAL CEILING SYSTEM
- 9.5 SUSPENDED GYPSUM BOARD CEILING
- 9.6 CERAMIC TILE
- 9.7 BASE
- 9.8 METAL STUDS
- 9.9 VINYL TILE FLOORING

10. SPECIALTIES
- 10.1 SOLID PHENOLIC TOILET COMPARTMENT
- 10.2 COMBINATION SEAT COVER DISPENSER AND TOILET TISSUE DISPENSER, SERVE TWO SIDES
- 10.3 STAINLESS STEEL FRAMED MIRROR, 7'-6"W x 3'-0"H
- 10.4 SOAP DISPENSER
- 10.5 RECESSED PAPER TOWEL DISPENSER / WASTE RECEPTACLE
- 10.6 SOLID PHENOLIC URINAL SCREEN
- 10.7 STAINLESS STEEL GRAB BAR
- 10.8 SANITARY NAPKIN / TAMPON VENDOR, SURFACE MOUNTED
- 10.9 COMBINATION SEAT COVER DISPENSER, SANITARY NAPKIN DISPOSAL, AND TOILET TISSUE DISPENSER, SERVE TWO SIDES
- 10.10 STAINLESS STEEL FRAMED MIRROR, 5'-0"W x 3'-0"H
- 10.11 MOP AND BROOM HOLDERS AND RAG HOOKS
- 10.12 COMBINATION SEAT COVER DISPENSER, SANITARY NAPKIN DISPOSAL, AND TOILET TISSUE DISPENSER, RECESSED

LEGEND

- CERAMIC WALL TILE, 4 1/4"x4 1/4", COLOR CT-1
- CERAMIC WALL TILE, 4 1/4"x4 1/4", COLOR CT-2
- CERAMIC WALL TILE, 4 1/4"x4 1/4", COLOR CT-3
- CERAMIC MOSAIC TILE, 2"x2", COLOR MT-1

NOTES:
1. REFER TO DRAWINGS A63.1 FOR ACCESSIBLE RESTROOM ACCESSORIES MOUNTING HEIGHTS AND ADDITIONAL NOTES.
2. REFER TO DRAWING A51.1 FOR COLORS AND MATERIALS LIST.

AS-BUILT
Contract No. BUS-443B
Date NOV. 2000

CONSTRUCTION CHANGE TABLE		
CHANGE	DATE	SHEET NUMBERS REVISED OR ADDED THIS CHANGE
1	6/28/99	ADDENDUM NO. 1

STV Incorporated
ENGINEERS/ARCHITECTS/PLANNERS/CONSTRUCTION MANAGERS
1055 WILSHIRE BOULEVARD, SUITE 1455
LOS ANGELES, CALIFORNIA 90017-2499

LICENSED ARCHITECT C-24485 RENEWAL DATE STATE OF CALIFORNIA

		DATE
DESIGNED BY	K. Kim	12/17/98
DRAWN BY	S. Escobar	12/17/98
CHECKED BY	M. Fernandes	12/17/98
MTDB PRJ. ENG.		

MTDB
Metropolitan Transit Development Board
1255 Imperial Avenue, Suite 1000, San Diego, Ca. 92101-7490 (619)231-1466

IMPERIAL AVENUE DIVISION
BUS MAINTENANCE FACILITY

INTERIOR ELEVATIONS

SCALE 1/4"=1'-0"
MTDB CONTRACT NO. BUS-443B
DRAWING NO. A50.1
SHEET NO. 33

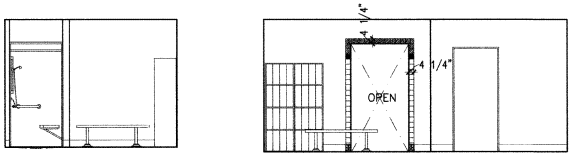

WOMEN'S LOCKER ROOM 204 INTERIOR ELEVATION 2 A50.2
1/4"=1'-0"

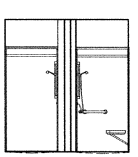

MEN'S LOCKER ROOM 203 INTERIOR ELEVATION 1 A50.2
1/4"=1'-0"

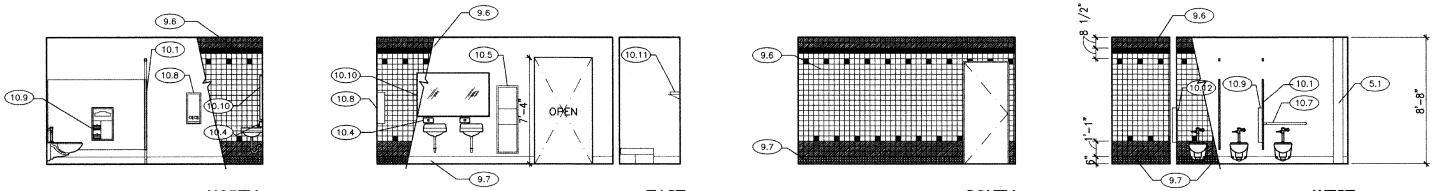

WOMEN'S LOCKER ROOM 204 & JANITOR 205 INTERIOR ELEVATIONS 3 A50.2
1/4"=1'-0"

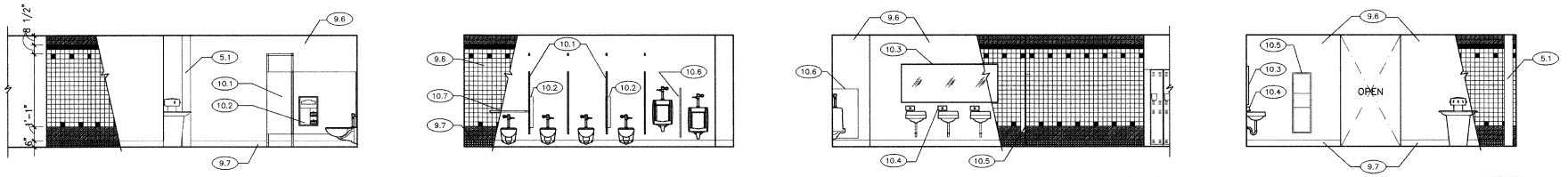

MEN'S LOCKER ROOM 203 INTERIOR ELEVATIONS 4 A50.2
1/4"=1'-0"

KEYNOTES

5. METALS

5.1 PAINTED STEEL STRUCTURE
5.2 PAINTED STEEL HANDRAIL
5.3 PAINTED STEEL PLATE
5.4 PAINTED STEEL BRACING
5.5 PAINTED STEEL LADDER
5.6 PAINTED STEEL GUARDRAIL
5.7 PAINTED STEEL CAGE
5.8 PAINTED STEEL PAN STAIR
5.9 METAL DECK
5.10 LOAD-BEARING METAL STUD FRAMING
5.11 SAFETY NOSING
5.12 METAL LOUVER

9. FINISHES

9.1 METAL LATH AND CEMENT PLASTER
9.2 GYPSUM WALLBOARD
9.3 PAINTED FINISH
9.4 SUSPENDED ACOUSTICAL CEILING SYSTEM
9.5 SUSPENDED GYPSUM BOARD CEILING
9.6 CERAMIC TILE
9.7 BASE
9.8 METAL STUDS
9.9 VINYL TILE FLOORING

10. SPECIALTIES

10.1 SOLID PHENOLIC TOILET COMPARTMENT
10.2 COMBINATION SEAT COVER DISPENSER AND TOILET TISSUE DISPENSER, SERVE TWO SIDES
10.3 STAINLESS STEEL FRAMED MIRROR, 7'-6"W x 3"-0"H
10.4 SOAP DISPENSER
10.5 RECESSED PAPER TOWEL DISPENSER / WASTE RECEPTACLE
10.6 SOLID PHENOLIC URINAL SCREEN
10.7 STAINLESS STEEL GRAB BAR
10.8 SANITARY NAPKIN / TAMPON VENDOR, SURFACE MOUNTED
10.9 COMBINATION SEAT COVER DISPENSER, SANITARY NAPKIN DISPOSAL, AND TOILET TISSUE DISPENSER, SERVE TWO SIDES
10.10 STAINLESS STEEL FRAMED MIRROR, 5'-0"W x 3'-0"H
10.11 MOP AND BROOM HOLDERS AND RAG HOOKS
10.12 COMBINATION SEAT COVER DISPENSER, SANITARY NAPKIN DISPOSAL, AND TOILET TISSUE DISPENSER, RECESSED

LEGEND

CERAMIC WALL TILE, 4 1/4"x4 1/4", COLOR CT-1

CERAMIC WALL TILE, 4 1/4"x4 1/4", COLOR CT-2

CERAMIC WALL TILE, 4 1/4"x4 1/4", COLOR CT-3

CERAMIC MOSAIC TILE, 2"x2", COLOR MT-1

NOTES:

1. REFER TO DRAWINGS A63.1 FOR ACCESSIBLE RESTROOM ACCESSORIES MOUNTING HEIGHTS AND ADDITIONAL NOTES.
2. REFER TO DRAWING A51.1 FOR COLORS AND MATERIALS LIST.

AS-BUILT
Contract No BUS-443B
Date NOV. 2000

CONSTRUCTION CHANGE TABLE		
CHANGE	DATE	SHEET NUMBERS REVISED OR ADDED THIS CHANGE

STV Incorporated
ENGINEERS/ARCHITECTS/PLANNERS/CONSTRUCTION MANAGERS
1055 WILSHIRE BOULEVARD, SUITE 1455
LOS ANGELES, CALIFORNIA 90017-2466

LICENSED ARCHITECT JOHN S. DOE C-24485 RENEWAL DATE STATE OF CALIFORNIA

DESIGNED BY	K. Kim	DATE 12/17/98
DRAWN BY	S. Escobar	12/17/98
CHECKED BY	M. Fernandes	12/17/98
MTDB PRJ. ENG.		

MTDB
Metropolitan Transit Development Board
1255 Imperial Avenue, Suite 1000, San Diego, Ca. 92101-7490 (619)231-1466

IMPERIAL AVENUE DIVISION
BUS MAINTENANCE FACILITY

INTERIOR ELEVATIONS

SCALE 1/4"=1'-0"
MTDB CONTRACT NO. BUS-443B
DRAWING NO. A50.2
SHEET NO. 34

WALL FINISH SCHEDULE

ROOM NO.	ROOM NAME	FLOOR FINISH	NORTH			EAST			SOUTH			WEST			REMARKS
			MATERIAL	FINISH	BASE	MATERIAL	FINISH	BASE	MATERIAL	FINISH	BASE	MATERIAL	FINISH	BASE	
G R O U N D F L O O R															
100	MAINTENANCE/REPAIR	HS	CMU	EP-3,S	–	CMU	P-3,S	–	CMU	EP-3.S	–	CMU	EP-3,S	–	EPOXY PAINT WALL UP TO 7'-2" A.F.F., SEALER ABOVE
101	CORRIDOR	ES	CMU	P-3	RB-1	CMU	P-3	RB-1	CMU	P-3	RB-1	CMU	P-3	RB-1	
102	CORRIDOR	ES	CMU	P-3	–	CMU	P-3	–	CMU	P-3	–	CMU	P-3	RB-1	–
103	FOREMEN'S OFFICE	VCT	GB	P-3	RB-1	GB	P-3	RB-1	GB	P-3	RB-1	GB	P-3	RB-1	–
104	ASSISTANT MANAGER	VCT	GB	P-3	RB-1	GB	P-3	RB-1	GB	P-3	RB-1	GB	P-3	RB-1	–
105	MECHANIC TOOL CARTS	HS	CMU	P-3	RB-1	GB	P-3	RB-1	CMU	P-3	RB-1	GB	P-3	RB-1	–
106	SHOP TOOLS	HS	CMU	P-3	RB-1	GB	P-3	RB-1	CMU	P-3	RB-1	GB	P-3	RB-1	–
107	WOMEN'S RESTROOM	CT	CMU	CT	CT	GB, CMU	CT	CT	GB, CMU	CT	CT	GB	CT	CT	–
108	MEN'S RESTROOM	CT	CMU	CT	CT	CMU	CT	CT	GB, CMU	CT	CT	GB	CT	CT	–
109	VESTIBULE	HS	GB	P-3	RB-1	GB	P-3	RB-1	CMU	P-3	RB-1	GB	P-3	–	–
110	JANITOR'S	S	GB	P-3	RB-1	CMU	P-3	RB-1	CMU	P-3	RB-1	GB, CMU	P-3	RB-1	–
111	ELEVATOR MACHINE ROOM	S	CMU	P-3	RB-1	CMU	P-3	RB-1	GB	P-3	RB-1	GB	P-3	RB-1	–
112	TELEPHONE/COMM. ROOM	S	GB	P-3	RB-1	CMU	P-3	RB-1	CMU	P-3	RB-1	CMU	P-3	RB-1	–
113	VESTIBULE	VCT	CMU	P-3	RB-1	GB	P-3	RB-1	GB	P-3	RB-1	CMU	P-3	RB-1	PAINT ACRYLIC WHITE
114	PARTS OFFICE	VCT	CMU	P-3	RB-1	CMU	P-3	RB-1	GB	P-3	RB-1	GB	P-3	RB-1	–
115	SECURE STORAGE	HS	CMU	P-3	–	GB	P-3	RB-1	WM		–	GB		–	HOT DIPPED GALV.
116	PARTS STORAGE	HS	CMU, GB	P-3	RB-1*	CMU, GB	P-3	RB-1*	CMU	P-3	–	CMU	P-3	–	*RUBBER BASE AT GYP. BD. WALL ONLY
117	BRAKE SHOP	ES	CMU	P-3,S	–	CMU	P-3,S	–	CMU	P-3,S	–	CMU	P-3,S	–	EPOXY PAINT WALL UP TO 7'-2" A.F.F., SEALER ABOVE
118	DRUM STORAGE	HS	CMU	ACRYLICS	–	CMU	S,S	–	CMU	S,S	–	CMU	S,S	–	1-COAT OF ACRYLIC PAINT
119	BODY SHOP	HS	CMU	P-3,S	–	CMU	P-3,S	–	CMU	P-3,S	–	CMU	P-3,S	–	EPOXY PAINT WALL UP TO 7'-2" A.F.F., SEALER ABOVE
120	PAINT SHOP	HS	CMU	ACRYLICS	–	CMU	S,S	–	CMU	S,S	–	CMU	S,S	–	1-COAT OF ACRYLIC PAINT
121	PAINT STORAGE	HS	CMU	ACRYLICS	–	CMU	S,S	–	CMU	S,S	–	CMU	S,S	–	1-COAT OF ACRYLIC PAINT
S T R E E T L E V E L F L O O R															
206	ELEVATOR LOBBY 1	VCT	GB	P-3	RB-1	GB	P-3	RB-1	GB	P-3	RB-1	GB	P-3	RB-1	–
208	ELECTRICAL ROOM	S	GB	P-3	RB-1	CMU	P-3	RB-1	GB	P-3	RB-1	GB	P-3	RB-1	–
S E C O N D F L O O R															
201	CORRIDOR	VCT	GB	P-3	RB-1	GLAZING	–	–	GB	P-3	RB-1	CMU	P-3	RB-1	VCT FLOORING COLOR CHANGED 80% V-938 20% V-964
202	VESTIBULE	VCT	GB	*	RB-1	GB	P-3	RB-1	GB	P-3	RB-1	GB	P-3	RB-1	–
203	MEN'S LOCKER ROOM	CT	CMU, GB	CT,P-3	CT	GB	CT,P-3	CT	GB	CT,P-3	CT	CMU, GB	CT,P-3	CT	SEE INTERIOR ELEVATIONS FOR CERAMIC WALL TILE HEIGHT
204	WOMEN'S LOCKER ROOM	CT	CMU, GB	CT,P-3	CT	CMU, GB	CT,P-3	CT	GB	CT,P-3	CT	CMU, GB	CT,P-3	CT	SEE INTERIOR ELEVATIONS FOR CERAMIC WALL TILE HEIGHT
205	JANITOR'S	S	GB	P-3	RB-1	GB	P-3	RB-1	GB	P-3	RB-1	GB	P-3	RB-1	–
207	ELEVATOR LOBBY 2	VCT	GB	P-7	RB-1	GB	P-3	RB-1	GLAZING,GB	P-3	–	GB	P-3	RB-1	VCT FLOORING COLOR CHANGED 80% V-938 20% V-964
209	LUNCH/TRAINING ROOM	VCT	GB	P-7	RB-1	GB	P-3	RB-1	GB	P-3	RB-1	GB	P-3	RB-1	VCT FLOORING COLOR CHANGED 80% V-938 20% V-964
210	SUPPLY ROOM	VCT	GB	P-7	RB-1	GB	P-3	RB-1	GB	P-3	RB-1	GB	P-3	RB-1	VCT FLOORING COLOR CHANGED 80% V-938 20% V-964
211	ADMINISTRATION OFFICE CARPET	*	GB	P-7	RB-1	GB	P-3	RB-1	GB	P-3	RB-1	GB	P-3	RB-1	*
212	MAINTENANCE MANAGER CARPET	*	GB	P-8	RB-1	GB	P-3	RB-1	GB	P-3	RB-1	GB	P-3	RB-1	*
213	FUTURE OFFICE	–	GB	–	–	EF	–	–	EF	–	–	EF	–	–	–
	STAIR NO. 1	HS	CMU, GB	P-3	–	CMU, GB	P-3	–	CMU, GB	P-3	–	CMU, GB	P-3	–	–
	STAIR NO. 2	HS	CMU, GB	P-3	–	CMU, GB	P-3	–	CMU, GB	P-3	–	CMU, GB	P-3	–	–
	STAIR NO. 3	HS	CMU, GB	P-3	–	CMU, GB	P-3	–	CMU, GB	P-3	–	CMU, GB	P-3	–	–

(*) SEE SHEET 107.

MATERIAL ABBREVIATIONS

CT	CERAMIC TILE
ES	EXPOSED STRUCTURE
EF	EXPOSED METAL STUD FRAMING AND BATT INSULATION
EP	EPOXY PAINT
GB	GYPSUM BOARD
HS	CONCRETE HARDENER/SEALER
P	PAINT
RB	RUBBER BASE
S	SEALER
VCT	VINYL COMPOSITION TILE
WM	WIRED MESH PARTITION

AS-BUILT NOTE:

REVISED THE VINYL TILE FLOOR FINISH FROM CLASSIC BLACK(5191C) TO A PATTERN CONSISTING OF 80% V-938 BALSAM/20% V-964 SKYLINE STEEL IN THE FOLLOWING ROOMS ONLY ON THE SECOND FLOOR:

1. CORRIDOR (ROOM 201)
2. ROOMS 210, 211, 212
3. LUNCH TRAINING ROOM 209
4. ELEVATOR LOBBY 207

COLORS AND MATERIALS

CONCRETE MASONRY UNIT TYPES
(BY ANGELUS BLOCK)

CMU-1: GRAY, MEDIUM WT. (ORANGE PLANT)
CMU-2: 225, MEDIUM WT. (ORANGE PLANT)

MORTAR FOR CONCRETE MASONRY UNITS
(BY SPEC MIX)

M-1: GRAY
M-2: #255

CEMENT PLASTER
(BY LA HABRA STUCCO)

CP-1: X-64 SEQUOIA
CP-2: X-23 ASPEN

ALUMINUM STOREFRONT & WINDOWS
(BY KAWNEER)

AN-1: BLACK

PAINT
(BY DUNN EDWARDS PAINT)

P-1: BLUE (TO MATCH EXIST. BUILDING NO. 1 SERVICE BAYS OVERHEAD DOOR)
P-2: GRANITE, SP 2870
P-3: WHISPER GRAY, SP 856
NOT USED
NOT USED
P-6: YOUR BLUFF, SP2730
P-7: OYSTER, SP-511
P-8: FLAXEN, SP-103

NOTE: SHT.107 ALSO USES DESIGNATIONS P-1,P2, etc. FOR TENANT IMPROVEMENTS.
EP-1: TO MATCH COLOR P-1

VINYL COMPOSITION TILE
(BY ARMSTRONG)

VT-1: CLASSIC WHITE, #51911

RUBBER BASE
(BY ARMSTRONG)

RB-1 642P, CHARCOAL

CERAMIC TILE
(BY DALTILE)

CT-1: ICE GREY, K-776, MATTE
CT-2: DESERT GREY, D-X114, SEMI-GLOSS
CT-3: DENIM, DH-69, SEMI-GLOSS
MT-1: SAPPHIRE, DK-399
MT-2: WHITE ABRASIVE, DK-317

GLAZING
(BY LIBBY OWNS FORD)

GL-1: 1/4" GREY TEMPERED GLASS
GL-2: 1/4" CLEAR WIRE GLASS
GL-3: 1/4" GREY FLOAT GLASS
GL-4: GREY FLOAT – OUTBOARD PANE, CLEAR FLOAT – INBOARD PANE
GL-5: 1/4" CLEAR TEMPERED GLASS

(EPOXY COATING SYSTEM (ES)

ICI DEVOE COATING SYSTEM INCLUDING EPOXY PRIMER, DEVFOR BAR RUST, DEVTHANE 579 URETHANE TOP COAT.

NOTES:

1. ALL INTERIOR FINISH SHALL COMPLY WITH U.B.C. CHAPTER 8.
2. PAINT ALL EXPOSED STRUCTURAL STEELS INCLUDING METAL DECKS, COLUMNS, BEAMS, JOIST, ETC. AND MISCELLANEOUS METALS INCLUDING STAIRS, RAILINGS, ETC. WITH COLOR P-2, UNLESS NOTED OTHERWISE.
3. MANUFACTURES LISTED ABOVE ARE FOR REFERENCE OF FINISH COLORS AND MATERIALS ONLY. SEE SPECIFICATIONS FOR COMPLETE LISTS OF ACCEPTABLE MANUFACTURES.

AS-BUILT
Contract No. BUS-443B
Date NOV. 2000

CONSTRUCTION CHANGE TABLE

CHANGE	DATE	SHEET NUMBERS REVISED OR ADDED THIS CHANGE
1	6/28/99	ADDENDUM NO. 1

STV Incorporated
ENGINEERS/ARCHITECTS/PLANNERS/CONSTRUCTION MANAGERS
1055 WILSHIRE BOULEVARD, SUITE 1455
LOS ANGELES, CALIFORNIA 90017-2499

LICENSED ARCHITECT C-24485 RENEWAL DATE STATE OF CALIFORNIA

DESIGNED BY K. Kim	DATE 12/17/98
DRAWN BY S. Escobar	12/17/98
CHECKED BY M. Fernandes	12/17/98
MTDB PRJ. ENG.	

MTDB
Metropolitan Transit Development Board
1255 Imperial Avenue, Suite 1000, San Diego, Ca. 92101-7490 (619)231-1466

IMPERIAL AVENUE DIVISION
BUS MAINTENANCE FACILITY

WALL FINISH SCHEDULE,
FINISH COLORS AND MATERIALS

SCALE: NO SCALE
MTDB CONTRACT NO. BUS-443B
DRAWING NO. A51.1
SHEET NO. 35

DOOR SCHEDULE

DOOR NO.	LOCATION FROM	LOCATION TO	DOOR TYPE	DOOR WxHxTH	DOOR MATERIAL	DOOR FINISH	FRAME MATERIAL	FRAME FINISH	RATING	HARDWARE GROUP	DETAILS HEAD	DETAILS JAMB	DETAILS TRANSOM	DETAILS THRESHOLD/SILL	REMARKS
GROUND FLOOR															
01	100	EXT	B	3' x 7' x 1 3/4"	HM	PTD P-2	HM	PTD P-2	–	1	1/A60.3	2/A60.3	1/A60.3	3/A60.3	
02	100	EXT	B	3' x 7' x 1 3/4"	HM	PTD P-2	HM	PTD P-2	–	1	1/A60.3	2/A60.3	1/A60.3	3/A60.3	
03	100	EXT	A	14' x 16'	STL	PTD P-2	–	–	–	2	4/A60.3	5/A60.3	–	–	W/12 VISION LITES
04	100	EXT	A	14' x 16'	STL	PTD P-2	–	–	–	2	4/A60.3	5/A60.3	–	–	W/12 VISION LITES
05	100	EXT	A	14' x 16'	STL	PTD P-2	–	–	–	2	4/A60.3	5/A60.3	–	–	W/12 VISION LITES
06	100	EXT	A	14' x 16'	STL	PTD P-2	–	–	–	2	4/A60.3	5/A60.3	–	–	W/12 VISION LITES
07	100	EXT	A	14' x 16'	STL	PTD P-2	–	–	–	2	4/A60.3	5/A60.3	–	–	W/12 VISION LITES
08	100	EXT	A	14' x 16'	STL	PTD P-2	–	–	–	2	4/A60.3	5/A60.3	–	–	W/12 VISION LITES
09	100	EXT	A	14' x 16'	STL	PTD P-2	–	–	–	2	4/A60.3	5/A60.3	–	–	W/12 VISION LITES
10	100	EXT	B	3' x 7' x 1 3/4"	HM	PTD P-2	HM	PTD P-2	–	1	1/A60.3	2/A60.3	1/A60.3	3/A60.3	
11	100	EXT	A	14' x 16'	STL	PTD P-2	–	–	–	2	4/A60.3	5/A60.3	–	–	W/12 VISION LITES
12	100	EXT	A	14' x 16'	STL	PTD P-2	–	–	–	2	4/A60.3	5/A60.3	–	–	W/12 VISION LITES
13	100	EXT	A	14' x 16'	STL	PTD P-2	–	–	–	2	4/A60.3	5/A60.3	–	–	W/12 VISION LITES
14	100	EXT	A	14' x 16'	STL	PTD P-2	–	–	–	2	4/A60.3	5/A60.3	–	–	W/12 VISION LITES
15	100	EXT	A	14' x 16'	STL	PTD P-2	–	–	–	2	4/A60.3	5/A60.3	–	–	W/12 VISION LITES
16	100	EXT	A	14' x 16'	STL	PTD P-2	–	–	–	2	4/A60.3	5/A60.3	–	–	W/12 VISION LITES
17	100	EXT	A	14' x 16'	STL	PTD P-2	–	–	–	2	4/A60.3	5/A60.3	–	–	W/12 VISION LITES
18	100	EXT	B	3' x 7' x 1 3/4"	HM	PTD P-2	HM	PTD P-2	–	1	1/A60.3	2/A60.3	1/A60.3	3/A60.3	
19	100	117	C	3' x 7' x 1 3/4"	HM	PTD P-2	HM	PTD P-2	1 HR.	3	7/A60.3	7/A60.3	–	–	W/6"W x 2'-6"H VISION PANEL
20	100	117	A	10' x 10'	STL	PTD P-2	–	–	1 HR.	2	6/A60.3	5/A60.3	–	–	
21	100	101	D	6' x 7' x 1 3/4"	HM	PTD P-2	HM	PTD P-2	1 HR.	4	7/A60.3	7/A60.3	–	–	W/TWO 10" x 10" VISION PANELS
22	102	101	C	3' x 7' x 1 3/4"	HM	PTD P-3	HM	PTD P-4	20 MIN.	5	7/A60.3	7/A60.3	–	–	
23	101	103	E	3' x 7' x 1 3/4"	HM	PTD P-3	HM	PTD P-4	20 MIN.	6	7/A60.3	7/A60.3	–	–	W/2'-0"W x 2'-6"H VISION PANEL
24	101	104	E	3' x 7' x 1 3/4"	HM	PTD P-3	HM	PTD P-4	20 MIN.	7	7/A60.3	7/A60.3	–	–	W/2'-0"W x 2'-6"H VISION PANEL
25	101	105	D	6' x 7' x 1 3/4"	HM	PTD P-3	HM	PTD P-4	20 MIN.	8	7/A60.3	7/A60.3	–	–	
26	101	106	C	3' x 7' x 1 3/4"	HM	PTD P-3	HM	PTD P-4	20 MIN.	9	7/A60.3	7/A60.3	–	–	
27	109	107	C	3' x 7' x 1 3/4"	HM	PTD P-3	HM	PTD P-4	20 MIN.	10	7/A60.3	7/A60.3	–	10/A60.4	
28	109	108	C	3' x 7' x 1 3/4"	HM	PTD P-3	HM	PTD P-4	20 MIN.	10	7/A60.3	7/A60.3	–	10/A60.4	
29	110	101	C	3' x 7' x 1 3/4"	HM	PTD P-3	HM	PTD P-4	20 MIN.	5	7/A60.3	7/A60.3	–	–	
30	101	111	C	3' x 7' x 1 3/4"	HM	PTD P-3	HM	PTD P-4	20 MIN.	11	7/A60.3	7/A60.3	–	–	
31	101	113	F	3' x 7' x 1 3/4"	STL	PTD P-3	STL	PTD P-4	1 HR.	10	7/A60.3	7,8/A60.3	–	–	
32	113	112	C	3' x 7' x 1 3/4"	HM	PTD P-3	HM	PTD P-4	1 HR.	11	9/A60.3	9/A60.3	–	–	
33	116	114	E	3' x 7' x 1 3/4"	HM	PTD P-3	HM	PTD P-4	1 HR.	3	9/A60.3				
34	116	101	G	6' x 5'	STL	PTD P-2	–	–	1 HR.	2	10/A60.3	11/A60.3	–	12/A60.3	
35	116	101	D	6' x 7'x 1 3/4"	HM	PTD P-3	HM	PTD P-4	1 HR.	12	7/A60.3	7/A60.3	–	–	W/TWO 10" x 10" VISION PANELS
36	102	118	C	3 'x 7' x 1 3/4"	HM	PTD P-2	HM	PTD P-2	–	3	7/A60.3	7/A60.3	–	–	3'-4""W x 3"H CONCRETE CURB AT SILL
36A	118	EXT	A	8' x 9'-4"	STL	PTD P-2	–	–	–	2	6/A60.3	5/A60.3	–	–	SEE 8/A60.4 FOR CONCRETE CURB AT SILL
37	102	EXT	J	3' x 7' x 1 3/4"	ALUM	ANOD AN-1	ALUM	ANOD AN-1	–	14	1/A60.4	1/A60.4	1/A60.4	1/A60.4	
38	116	EXT	A	6'-8" x 12'	STL	PTD P-2	STL	PTD P-2	–	2	6/A60.3	5/A60.3	–	–	
39	116	EXT	C	3' x 7' x 1 3/4"	HM	PTD P-2	HM	PTD P-2	–	1	7/A60.3	7/A60.3	–	3/A60.3	W/6"W x 2'-6"H VISION PANEL
40	STAIR NO.3	EXT	K	3' x 7' x 1 3/4"	ALUM	ANOD AN-1	ALUM	ANOD AN-1	–	14	1/A60.4	1/A60.4	1/A60.4	1/A60.4	
41	119	EXT	B	3' x 7' x 1 3/4"	HM	PTD P-2	HM	PTD P-2	–	15	1/A60.3	2/A60.3	1/A60.3	3/A60.3	PANIC HARDWARE
42	EXT	119	A	14' x 16'	STL	PTD P-2	–	–	–	2	6/A60.3	5/A60.3	–	–	W/12 VISION LITES
43	EXT	120	A	10' x 12'-6"	STL	PTD P-2	–	–	–	2	6/A60.3	5/A60.3	–	–	
44	120	EXT	B	3' x 7' x 1 3/4"	HM	PTD P-2	HM	PTD P-2	45 MIN.	16	1/A60.3	2/A60.3	1/A60.3	3/A60.3	PANIC HARDWARE
45	120	121	C	3' x 7' x 1 3/4"	HM	PTD P-3	HM	PTD P-4	–	17	7/A60.3	7/A60.3	–	–	
46	119	EXT	B	3' x 7' x 1 3/4"	HM	PTD P-2	HM	PTD P-2	45 MIN.	16	1/A60.3	2/A60.3	1/A60.3	3/A60.3	PANIC HARDWARE
STREET LEVEL															
60	206	EXT	M	3' x 7' x 1 3/4"	ALUM	ANOD AN-1	ALUM	ANOD AN-1	–	14					
61	EXT	208	C	4' x 7' x 1 3/4"	HM	PTD P-2	HM	PTD P-2	–	19					W/ 2'x2' MTL LOUVER, 50% MIN. OPEN AREA
SECOND FLOOR															
62	213	207	Q	3' x 7' x 1 3/4"	HM	PTD P-3	HM	PTD P-4	1 HR.	10	9/A60.3	2/A60.4	–	–	
63	213	STAIR NO.1	C	3' x 7' x 1 3/4"	HM	PTD P-3	HM	PTD P-4	1 HR.	20	9/A60.3	9/A60.3	–	–	
64	205	201	C	3' x 7' x 1 3/4"	HM	PTD P-3	HM	PTD P-4	20 MIN.	5	9/A60.3	9/A60.3	–	–	
65	204	201	C	3' x 7' x 1 3/4"	HM	PTD P-3	HM	PTD P-4	20 MIN.	21	5/A60.4	5/A60.4	–	10/A60.4	
66	209	201	P	3' x 7' x 1 3/4"	STL	PTD P-3	STL	PTD P-4	20 MIN.	20	9/A60.3	2/A60.4	–	–	
67	209	211	C	3' x 7' x 1 3/4"	HM	PTD P-3	HM	PTD P-4	1 HR.	17	9/A60.3	9/A60.3	–	–	
68	209	201	P	3' x 7' x 1 3/4"	STL	PTD P-3	STL	PTD P-4	20 MIN.	20	9/A60.3	2/A60.4	–	–	

DOOR SCHEDULE

DOOR NO.	LOCATION FROM	LOCATION TO	DOOR TYPE	DOOR WxHxTH	DOOR MATERIAL	DOOR FINISH	FRAME MATERIAL	FRAME FINISH	RATING	HARDWARE GROUP	DETAILS HEAD	DETAILS JAMB	DETAILS TRANSOM	DETAILS THRESHOLD/SILL	REMARKS
69	201	202	C	3' x 7' x 1 3/4"	HM	PTD P-3	HM	PTD P-4	20 MIN.	10	9/A60.3	9/A60.3	–	–	
70	203	202	C	3' x 7' x 1 3/4"	HM	PTD P-3	HM	PTD P-4	–	22	5/A60.4	5/A60.4	–	10/A60.4	
71	201	212	C	3' x 7' x 1 3/4"	HM	PTD P-3	HM	PTD P-4	20 MIN.	9	9/A60.3	9/A60.3	–	–	
72	212	210	C	3' x 7' x 1 3/4"	HM	PTD P-3	HM	PTD P-4	–	17	9/A60.3	9/A60.3	–	–	
73	214	210	C	3' x 7' x 1 3/4"	WD	CLV	HM	PTD P-4	20 MIN.	21	9/A60.3	9/A60.3	–	–	
74	214	217	C	3' x 7' x 1 3/4"	WD	CLV	HM	PTD P-4	20 MIN.	21	9/A60.3	9/A60.3	–	–	
75	218	216	C	3' x 7' x 1 3/4"	WD	CLV	HM	PTD P-4	20 MIN.	22	9/A60.3	9/A60.3	–	–	
76	214	218	Q	3' x 7' x 1 3/4"	WD	CLV	HM	PTD P-4	20 MIN.	23	9/A60.3	2/A60.4	–	–	W/6"W x 2'-6"H VISION PANEL
77	220	218	C	3' x 7' x 1 3/4"	WD	CLV	HM	PTD P-4		24	9/A60.3	9/A60.3	–	–	
78	220	221	C	3' x 7' x 1 3/4"	WD	CLV	HM	PTD P-4		24	9/A60.3	9/A60.3	–	–	
79	214	220	Q	3' x 7' x 1 3/4"	WD	CLV	HM	PTD P-4	20 MIN.	23	9/A60.3	2/A60.4	–	–	
81	214	221	Q	3' x 7' x 1 3/4"	WD	CLV	HM	PTD P-4	20 MIN.	23	9/A60.3	2/A60.4	–	–	W/6"W x 2'-6"H VISION PANEL
82	214	222	Q	3' x 7' x 1 3/4"	WD	CLV	HM	PTD P-4	20 MIN.	23	9/A60.3	2/A60.4	–	–	W/6"W x 2'-6"H VISION PANEL
83	224	219	C	3' x 7' x 1 3/4"	WD	CLV	HM	PTD P-4		25	9/A60.3	9/A60.3	–	–	
84	214	223	Q	3' x 7' x 1 3/4"	WD	CLV	HM	PTD P-4	20 MIN.	26	9/A60.3	2/A60.4	–	–	
85	214	224	E	3' x 7' x 1 3/4"	WD	CLV	HM	PTD P-4	20 MIN.	26	9/A60.3	9/A60.3	–	–	
86	214	226	E	3' x 7' x 1 3/4"	WD	CLV	HM	PTD P-4	20 MIN.	26	9/A60.3	9/A60.3	–	–	
87	214	225	Q	3' x 7' x 1 3/4"	WD	CLV	HM	PTD P-4	20 MIN.	26	9/A60.3	2/A60.4	–	–	
88	230	227	C	3' x 7' x 1 3/4"	WD	CLV	HM	PTD P-4		25	9/A60.3	9/A60.3	–	–	
89	N	O T		U S E D											
90	N	O T		U S E D											
91	214	230	Q	3' x 7' x 1 3/4"	WD	CLV	HM	PTD P-4	20 MIN.	26	9/A60.3	2/A60.4	–	–	
92	230	231	C	3' x 7' x 1 3/4"	WD	CLV	HM	PTD P-4		27	9/A60.3	9/A60.3	–	–	
93	231	232	E	30" x 7' x 1 3/4"	WD	CLV	HM	PTD P-4		28	9/A60.3	9/A60.3	–	–	
94	232	233	E	30" x 7' x 1 3/4"	WD	CLV	HM	PTD P-4		28	9/A60.3	9/A60.3	–	–	
95	230	234	C	3' x 7' x 1 3/4"	WD	CLV	HM	PTD P-4		24	9/A60.3	9/A60.3	–	–	
96	236	235	Q	3' x 7' x 1 3/4"	WD	CLV	HM	PTD P-4		29	9/A60.3	2/A60.4	–	–	
97	236	211	E	3' x 7' x 1 3/4"	WD	CLV	HM	PTD P-4		29	9/A60.3	9/A60.3	–	–	
98	236	230	Q	3' x 7' x 1 3/4"	WD	CLV	HM	PTD P-4		26	9/A60.3	2/A60.4	–	–	
99	236	237	Q	3' x 7' x 1 3/4"	WD	CLV	HM	PTD P-4		26	9/A60.3	2/A60.4	–	–	
100	236	238	Q	3' x 7' x 1 3/4"	WD	CLV	HM	PTD P-4		26	9/A60.3	2/A60.4	–	–	
101	214	239	C	3' x 7' x 1 3/4"	WD	CLV	HM	PTD P-4	20 MIN.	30	9/A60.3	9/A60.3	–	–	
102	236	214	H	3' x 7' x 1 3/4"	HM	PTD P-3	HM	PTD P-4	20 MIN.	31	9/A60.3	2/A60.4	–	–	
103	214	240	C	3' x 7' x 1 3/4"	WD	CLV	HM	PTD P-4	20 MIN.	30	9/A60.3	9/A60.3	–	–	
104	207	202	Q	3' x 7' x 1 3/4"	HM	PTD P-3	HM	PTD P-4	1-HR	10	9/A60.3	2/A60.4	–	–	
ROOF LEVEL															
80	212	ROOF	C	3' x 7' x 1 3/4"	HM	PTD P-2	HM	PTD P-2		23	6/A60.4	6/A60.4	–	9/A60.4	6"H CURB AT SILL

NOTES

1. SEE SPECIFICATIONS FOR HARDWARE GROUP DESCRIPTION.
2. SEE A51.1 FOR COLORS AND MATERIALS LEGEND AND ABBREVIATIONS.
3. EXIT DOORS TO BE OPENABLE FROM INSIDE WITHOUT USE OF KEYS OR ANY SPECIAL KNOWLEDGE OR EFFORT.
4. THE BOTTOM 10" OF ALL DOORS SHALL HAVE A SMOOTH, UNINTERRUPTED SURFACE TO ALLOW THE DOOR TO BE OPENED BY A WHEELCHAIR FOOTREST WITHOUT CREATING A TRAP OR HAZARDOUS CONDITION. WHERE NARROW FRAME DOORS ARE USED, A 10" HIGH SMOOTH PANEL SHALL BE INSTALLED ON THE PUSH SIDE OF THE DOOR, WHICH WILL ALLOW THE DOOR TO BE OPENED BY A WHEELCHAIR FOOTREST WITHOUT CREATING A TRAP OR HAZARDOUS CONDITION.
5. SEE MECHANICAL DRAWINGS FOR DOOR LOUVER REQUIREMENTS.
6. CLV = CLEAR VARNISH

AS-BUILT
Contract No. BUS-443B
Date NOV. 2000

DOOR TYPES

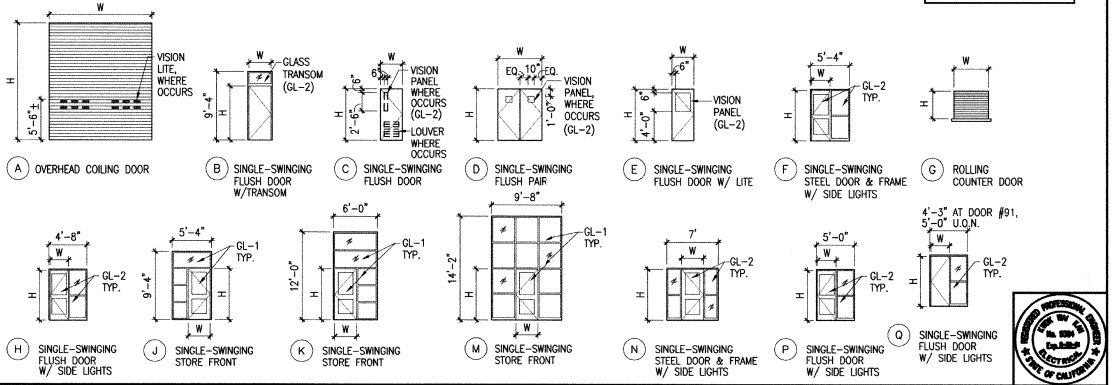

CONSTRUCTION CHANGE TABLE

CHANGE	DATE	SHEET NUMBERS REVISED OR ADDED THIS CHANGE
1	4/[illegible]/00	[illegible]ENTS

STV Incorporated
ENGINEERS & PLANNERS
1055 WILSHIRE BLVD., SUITE 1455
LOS ANGELES, CA. 90017

DESIGNED BY K. Kim	DATE 6/12/00
DRAWN BY S. Escobar	6/12/00
CHECKED BY M. Fernandes	6/12/00
MTDB PRJ. ENG.	

MTDB
Metropolitan Transit Development Board
1255 Imperial Avenue, Suite 1000, San Diego, Ca. 92101-7490 (619)231-1466

IMPERIAL AVENUE DIVISION
BUS MAINTENANCE FACILITY

DOOR SCHEDULE AND TYPES

SCALE NO SCALE
MTDB CONTRACT NO.
DRAWING NO. A51.2
SHEET NO. 36

DOOR SCHEDULE

DOOR NO.	LOCATION FROM	LOCATION TO	DOOR TYPE	DOOR WxHxTH	DOOR MATERIAL	DOOR FINISH	FRAME MATERIAL	FRAME FINISH	RATING	HARDWARE GROUP	DETAILS HEAD	DETAILS JAMB	DETAILS TRANSOM	DETAILS THRESHOLD/SILL	REMARKS
GROUND FLOOR															NOTES: 1. SEE SPECS. FOR HARDWARE GROUP DESCRIPTION 2. ALL GLAZING TO BE G-3 UNLESS NOTED OTHERWISE 3. SEE MECHANICAL DWGS. FOR DOOR LOUVER REQUIREMENTS
01	100	EXT	B	3' x 7' x 1 3/4"	HM	PTD P-2	HM	PTD P-2	–	1	1/A60.3	2/A60.3	1/A60.3	3/A60.3	
02	100	EXT	B	3' x 7' x 1 3/4"	HM	PTD P-2	HM	PTD P-2	–	1	1/A60.3	2/A60.3	1/A60.3	3/A60.3	
03	100	EXT	A	14' x 16'	STL	PTD P-2	SEE NOTE	–	–	2	4/A60.3	5/A60.3	–	–	W/12 VISION LITES
04	100	EXT	A	14' x 16'	STL	PTD P-2		–	–	2	4/A60.3	5/A60.3	–	–	W/12 VISION LITES
05	100	EXT	A	14' x 16'	STL	PTD P-2		–	–	2	4/A60.3	5/A60.3	–	–	W/12 VISION LITES
06	100	EXT	A	14' x 16'	STL	PTD P-2		–	–	2	4/A60.3	5/A60.3	–	–	W/12 VISION LITES
07	100	EXT	A	14' x 16'	STL	PTD P-2		–	–	2	4/A60.3	5/A60.3	–	–	W/12 VISION LITES
08	100	EXT	A	14' x 16'	STL	PTD P-2		–	–	2	4/A60.3	5/A60.3	–	–	W/12 VISION LITES
09	100	EXT	A	14' x 16'	STL	PTD P-2		–	–	2	4/A60.3	5/A60.3	–	–	W/12 VISION LITES
10	100	EXT	B	3' x 7' x 1 3/4"	HM	PTD P-2	HM	PTD P-2	–	1	1/A60.3	2/A60.3	1/A60.3	3/A60.3	
11	100	EXT	A	14' x 16'	STL	PTD P-2		–	–	2	4/A60.3	5/A60.3	–	–	W/12 VISION LITES
12	100	EXT	A	14' x 16'	STL	PTD P-2		–	–	2	4/A60.3	5/A60.3	–	–	W/12 VISION LITES
13	100	EXT	A	14' x 16'	STL	PTD P-2		–	–	2	4/A60.3	5/A60.3	–	–	W/12 VISION LITES
14	100	EXT	A	14' x 16'	STL	PTD P-2		–	–	2	4/A60.3	5/A60.3	–	–	W/12 VISION LITES
15	100	EXT	A	14' x 16'	STL	PTD P-2		–	–	2	4/A60.3	5/A60.3	–	–	W/12 VISION LITES
16	100	EXT	A	14' x 16'	STL	PTD P-2		–	–	2	4/A60.3	5/A60.3	–	–	W/12 VISION LITES
17	100	EXT	A	14' x 16'	STL	PTD P-2		–	–	2	4/A60.3	5/A60.3	–	–	W/12 VISION LITES
18	100	EXT	B	3' x 7' x 1 3/4"	HM	PTD P-2	HM	PTD P-2	–	1	1/A60.3	2/A60.3	1/A60.3	3/A60.3	
19	100	117	C	3' x 7' x 1 3/4"	HM	PTD P-2	HM	PTD P-2	1 HR.	3	7/A60.3	7/A60.3	–	–	W/6"W x 2'-6"H VISION PANEL
20	100	117	A	10' x 10'	STL	PTD P-2		–	1 HR.	2	6/A60.3	5/A60.3	–	–	
21	100	101	D	6' x 7' x 1 3/4"	HM	PTD P-2	HM	PTD P-2	1 HR.	4	7/A60.3	7/A60.3	–	–	W/TWO 10" x 10" VISION PANELS
22	102	101	C	3' x 7' x 1 3/4"	HM	PTD P-3	HM	PTD P-4	20 MIN.	5	7/A60.3	7/A60.3	–	–	
23	101	103	E	3' x 7' x 1 3/4"	HM	PTD P-3	HM	PTD P-4	20 MIN.	6	7/A60.3	7/A60.3	–	–	W/2'-0"W x 2'-6"H VISION PANEL
24	101	104	E	3' x 7' x 1 3/4"	HM	PTD P-3	HM	PTD P-4	20 MIN.	7	7/A60.3	7/A60.3	–	–	W/2'-0"W x 2'-6"H VISION PANEL
25	101	105	D	6' x 7' x 1 3/4"	HM	PTD P-3	HM	PTD P-4	20 MIN.	8	7/A60.3	7/A60.3	–	–	
26	101	106	C	3' x 7' x 1 3/4"	HM	PTD P-3	HM	PTD P-4	20 MIN.	9	7/A60.3	7/A60.3	–	–	
27	109	107	C	3' x 7' x 1 3/4"	HM	PTD P-3	HM	PTD P-4	20 MIN.	10	7/A60.3	7/A60.3	–	10/A60.4	
28	109	108	C	3' x 7' x 1 3/4"	HM	PTD P-3	HM	PTD P-4	20 MIN.	10	7/A60.3	7/A60.3	–	10/A60.4	
29	110	101	C	3' x 7' x 1 3/4"	HM	PTD P-3	HM	PTD P-4	20 MIN.	5	7/A60.3	7/A60.3	–	–	
30	101	111	C	3' x 7' x 1 3/4"	HM	PTD P-3	HM	PTD P-4	20 MIN.	11	7/A60.3	7/A60.3	–	–	
31	101	113	F	3' x 7' x 1 3/4"	STL	PTD P-3	STL	PTD P-4	1 HR.	10	7/A60.3	7,8/A60.3	–	–	
32	113	112	C	3' x 7' x 1 3/4"	HM	PTD P-3	HM	PTD P-4	1 HR.	11	9/A60.3	9/A60.3	–	–	
33	116	114	E	3' x 7' x 1 3/4"	HM	PTD P-3	HM	PTD P-4	1 HR.	3	9/A60.3				
34	116	101	G	6' x 5'	STL	PTD P-2	–	–	1 HR.	2	10/A60.3	11/A60.3	–	12/A60.3	
35	116	101	D	6' x 7x 1 3/4"	HM	PTD P-3	HM	PTD P-4	1 HR.	12	7/A60.3	7/A60.3	–	–	W/TWO 10" x 10" VISION PANELS
36	102	118	C	3 'x 7' x 1 3/4"	HM	PTD P-3	HM	PTD P-2	–	3	7/A60.3	7/A60.3	–	–	3'-4""W x 3"H CONCRETE CURB AT SILL
36A	118	EXT	A	8' x 9'-4"	STL	PTD P-2	SEE NOTE	–	–	2	6/A60.3	5/A60.3	–	–	SEE 8/A60.4 FOR CONCRETE CURB AT SILL
37	102	EXT	J	3' x 7' x 1 3/4"	ALUM	ANOD AN-1	ALUM	ANOD AN-1	–	14	1/A60.4	1/A60.4	1/A60.4	1/A60.4	
38	116	EXT	A	8'-8" x 11'-7"	STL	PTD P-2	STL	PTD P-2	SEE NOTE	2	6/A60.3	5/A60.3	–	–	
39	116	EXT	C	3' x 7' x 1 3/4"	HM	PTD P-2	HM	PTD P-2	–	1	7/A60.3	7/A60.3	–	3/A60.3	W/6"W x 2'-6"H VISION PANEL
40	STAIR NO.3	EXT	K	3' x 7' x 1 3/4"	ALUM	ANOD AN-1	ALUM	ANOD AN-1	–	14	1/A60.4	1/A60.4	1/A60.4	1/A60.4	
41	119	EXT	B	3' x 7' x 1 3/4"	HM	PTD P-2	HM	PTD P-2	–	15	1/A60.3	2/A60.3	1/A60.3	3/A60.3	PANIC HARDWARE
42	EXT	119	A	14' x 16'	STL	PTD P-2	SEE NOTE	–	–	2	6/A60.3	5/A60.3	–	–	W/12 VISION LITES
43	EXT	120	A	10' x 12'-6"	STL	PTD P-2		–	–	2	6/A60.3	5/A60.3	–	–	
44	120	EXT	B	3' x 7' x 1 3/4"	HM	PTD P-2	HM	PTD P-2	45 MIN.	16	1/A60.3	2/A60.3	1/A60.3	3/A60.3	PANIC HARDWARE
45	120	121	C	3' x 7' x 1 3/4"	HM	PTD P-3	HM	PTD P-4	–	17	7/A60.3	7/A60.3	–	–	
46	119	EXT	B	3' x 7' x 1 3/4"	HM	PTD P-2	HM	PTD P-2	45 MIN.	16	1/A60.3	2/A60.3	1/A60.3	3/A60.3	PANIC HARDWARE
STREET LEVEL															
60	206	EXT	M	3' x 7' x 1 3/4"	ALUM	ANOD AN-1	ALUM	ANOD AN-1	–	14					
61	EXT	208	C	4' x 7' x 1 3/4"	HM	PTD P-2	HM	PTD P-2	–	19					W/ 2'x2' MTL LOUVER, 50% MIN. OPEN AREA
															SCHLAGE LOCK TO CONFORM TO SDGE REQUIREMENTS
															SIGN ON EXT SIDE OF DOOR NO 61 TO READ "ELECTRIC METER ROOM"

DOOR SCHEDULE

DOOR NO.	LOCATION FROM	LOCATION TO	DOOR TYPE	DOOR WxHxTH	DOOR MATERIAL	DOOR FINISH	FRAME MATERIAL	FRAME FINISH	RATING	HARDWARE GROUP	DETAILS HEAD	DETAILS JAMB	DETAILS TRANSOM	DETAILS THRESHOLD/SILL	REMARKS
SECOND FLOOR															NOTES: 1. SEE SPECS. FOR HARDWARE GROUP DESCRIPTION 2. ALL GLAZING TO BE G-3 UNLESS NOTED OTHERWISE 3. SEE MECHANICAL DWGS. FOR DOOR LOUVER REQUIREMENTS
62	213	207	N	3' x 7' x 1 3/4"	STL	PTD P-3	STL	PTD P-4	20 MIN.	20	9/A60.3	9/A60.3	–	–	
63	213	STAIR NO.1	C	3' x 7' x 1 3/4"	HM	PTD P-3	HM	PTD P-4	1 HR.	20	9/A60.3	9/A60.3	–	–	
64	205	201	C	3' x 7' x 1 3/4"	HM	PTD P-3	HM	PTD P-4	20 MIN.	5	9/A60.3	9/A60.3	–	–	
65	204	201	C	3' x 7' x 1 3/4"	HM	PTD P-3	HM	PTD P-4	20 MIN.	21	5/A60.4	5/A60.4	–	10/A60.4	
66	209	201	P	3' x 7' x 1 3/4"	STL	PTD P-3	STL	PTD P-4	20 MIN.	20	9/A60.3	2/A60.4	–	–	
67	209	211	C	3' x 7' x 1 3/4"	HM	PTD P-3	HM	PTD P-4	1 HR.	17	9/A60.3	9/A60.3	–	–	
68	209	201	P	3' x 7' x 1 3/4"	STL	PTD P-3	STL	PTD P-4	20 MIN.	20	9/A60.3	2/A60.4	–	–	
69	201	202	C	3' x 7' x 1 3/4"	HM	PTD P-3	HM	PTD P-4	20 MIN.	10	9/A60.3	9/A60.3	–	–	
70	203	202	C	3' x 7' x 1 3/4"	HM	PTD P-3	HM	PTD P-4	–	22	5/A60.4	5/A60.4	–	10/A60.4	
71	201	212	C	3' x 7' x 1 3/4"	HM	PTD P-3	HM	PTD P-4	20 MIN.	9	9/A60.3	9/A60.3	–	–	
72	212	210	C	3' x 7' x 1 3/4"	HM	PTD P-3	HM	PTD P-4	–	17	9/A60.3	9/A60.3	–	–	
ROOF LEVEL															
80	212	ROOF	C	3' x 7' x 1 3/4"	HM	PTD P-2	HM	PTD P-2		23	9/A60.3	9/A60.3	–	–	3"H CON. CURB AT SILL

DOOR TYPES

NOTE:
TYPE (A) DOORS
PAINT COLOR CHANGE TO SP 2730, DUNN EDWARDS BLUFF.

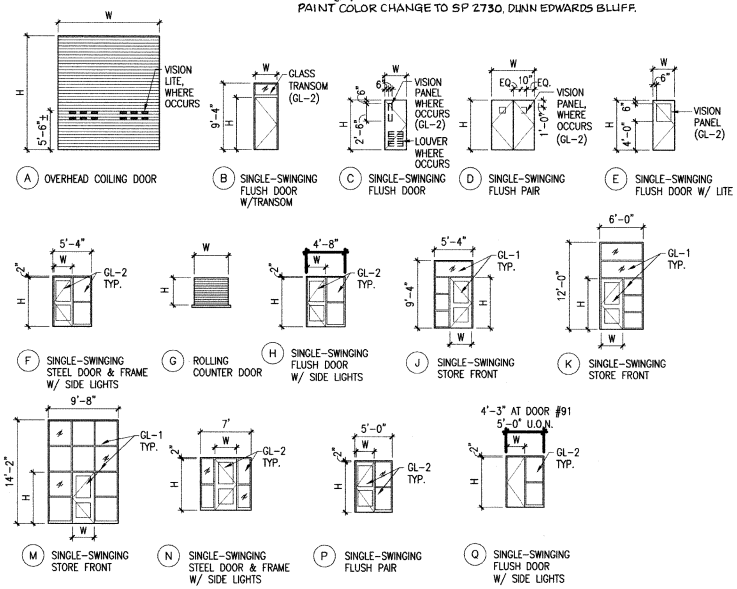

(A) OVERHEAD COILING DOOR
(B) SINGLE-SWINGING FLUSH DOOR W/TRANSOM
(C) SINGLE-SWINGING FLUSH DOOR
(D) SINGLE-SWINGING FLUSH PAIR
(E) SINGLE-SWINGING FLUSH DOOR W/ LITE
(F) SINGLE-SWINGING STEEL DOOR & FRAME W/ SIDE LIGHTS
(G) ROLLING COUNTER DOOR
(H) SINGLE-SWINGING FLUSH DOOR W/ SIDE LIGHTS
(J) SINGLE-SWINGING STORE FRONT
(K) SINGLE-SWINGING STORE FRONT
(M) SINGLE-SWINGING STORE FRONT
(N) SINGLE-SWINGING STEEL DOOR & FRAME W/ SIDE LIGHTS
(P) SINGLE-SWINGING FLUSH PAIR
(Q) SINGLE-SWINGING FLUSH DOOR W/ SIDE LIGHTS

AS-BUILT
A. deBrauw
Contract No. BUS-443B
Date NOV. 2000

CONSTRUCTION CHANGE TABLE

CHANGE	DATE	SHEET NUMBERS REVISED OR ADDED THIS CHANGE
1	9/29/99	ADD NOTES DOOR 61

STV Incorporated
ENGINEERS/ARCHITECTS/PLANNERS/CONSTRUCTION MANAGERS
1055 WILSHIRE BOULEVARD, SUITE 1455
LOS ANGELES, CALIFORNIA 90017-2499

LICENSED ARCHITECT JOHN SOO PAE C-24485 GENERAL DATE STATE OF CALIFORNIA

		DATE
DESIGNED BY	K. Kim	12/17/98
DRAWN BY	S. Escobar	12/17/98
CHECKED BY	M. Fernandes	12/17/98
MTDB PRJ. ENG.		

MTDB
Metropolitan Transit Development Board
1255 Imperial Avenue, Suite 1000, San Diego, Ca. 92101-7490 (619)231-1466

IMPERIAL AVENUE DIVISION
BUS MAINTENANCE FACILITY

DOOR SCHEDULE AND TYPES

SCALE	NO SCALE
MTDB CONTRACT NO.	BUS-443B
DRAWING NO.	A51.2
SHEET NO.	36

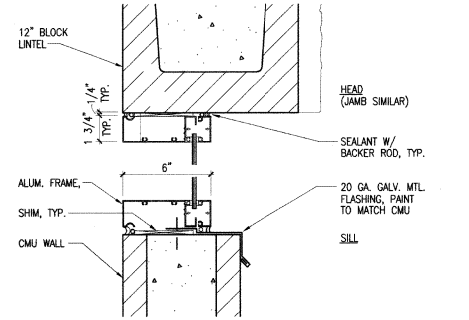

ALUMINUM WINDOW 6 A51.3
3"=1'-0"

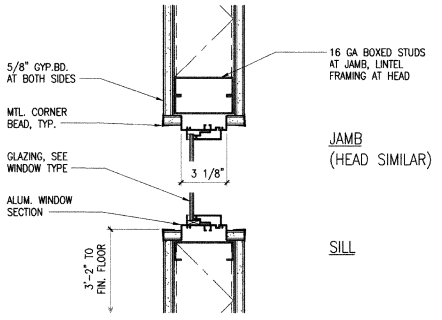

ALUMINUM WINDOW 3 A51.3
3"=1'-0"

WINDOW SCHEDULE

WINDOW TYPE	SIZE W x H	MATERIAL	FINISH	RATING	DETAILS HEAD	DETAILS JAMB	DETAILS SILL	WINDOW BLINDS	REMARKS
A	8'-0"W x 4'-6"H	STL	FACT	1HR	1/A51.3	2/A51.3	1/A51.3	Y	
B	6'-0"W x 4'-0"H	ALUM	ANOD AN-1	–	3/A51.3	3/A51.3	3/A51.3	Y	1/4" CLEAR TEMPERED GLASS
C	3'-4"W x 3'-4"H	ALUM	ANOD AN-1	–	4/A51.3	4/A51.3	4/A51.3	–	1/4" GREY FLOAT GLASS
D	14'-8"W x 4'-8"H	ALUM	ANOD AN-1	–	5/A51.3	5/A51.3	5/A51.3	Y	
E	12'-0"W x 4'-8"H	ALUM	ANOD AN-1	–	5/A51.3	5/A51.3	5/A51.3	Y	
F	8'-0"W x 4'-0"H	STL	FACT	1HR	1/A51.3	2/A51.3	1/51.3	Y	
G	18'-10"W x 4'-8"H	ALUM	ANOD AN-1	–	6/A51.3	6/A51.3	6/A51.3	–	
H	8'-0"W x 4'-0"H	ALUM	ANOD AN-1	–	3/A51.3	3/A51.3	3/A51.3	–	
J	1'-9"W x 3'-0"H	STL	FACT	1HR					
K	6'-0"W x 5'-0"H	ALUM	ANOD AN-1	–	3/A51.3	3/A51.3	3/A51.3	Y	1/4" CLEAR TEMPERED GLASS

WINDOW TYPES

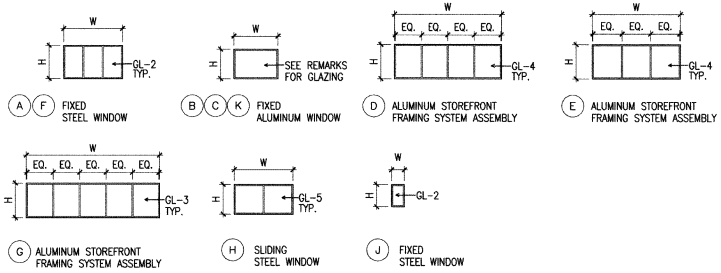

(A) (F) FIXED STEEL WINDOW
(B) (C) (K) FIXED ALUMINUM WINDOW
(D) ALUMINUM STOREFRONT FRAMING SYSTEM ASSEMBLY
(E) ALUMINUM STOREFRONT FRAMING SYSTEM ASSEMBLY
(G) ALUMINUM STOREFRONT FRAMING SYSTEM ASSEMBLY
(H) SLIDING STEEL WINDOW
(J) FIXED STEEL WINDOW

AS-BUILT
Contract No. BUS-443B
Date NOV. 2000

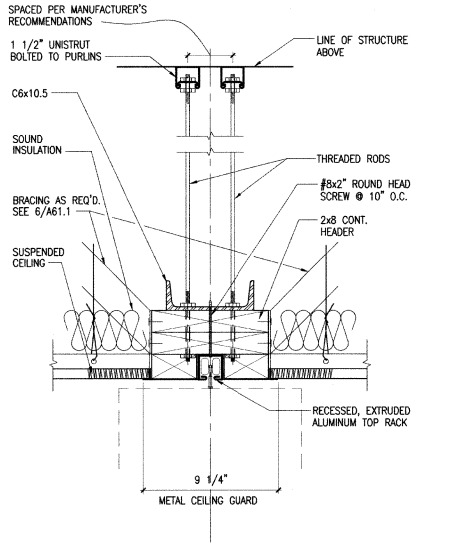

ACCORDION PARTITION TRACK 7 A51.3

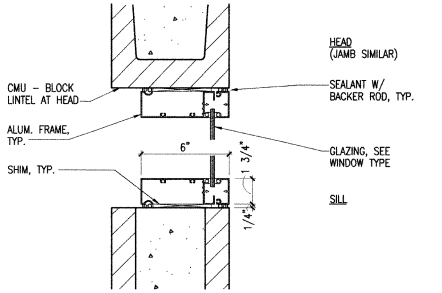

ALUMINUM WINDOW 4 A51.3
3"=1'-0"

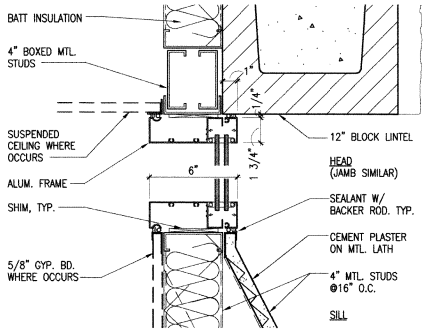

ALUMINUM WINDOW 5 A51.3
3"=1'-0"

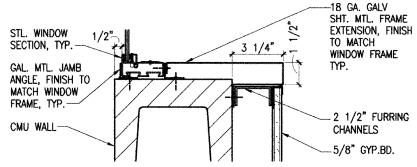

FIRE RATED WINDOW JAMB 2 A51.3
3"=1'-0"

FIRE RATED WIN. HEAD & SILL

1 A51.3
3"=1'-0"

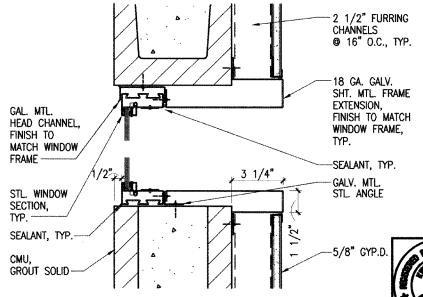

CONSTRUCTION CHANGE TABLE		
CHANGE	DATE	SHEET NUMBERS REVISED OR ADDED THIS CHANGE
1	4/27/00	[redacted]

STV Incorporated
ENGINEERS & PLANNERS
1055 WILSHIRE BLVD., SUITE 1455
LOS ANGELES, CA. 90017

		DATE
DESIGNED BY	K. Kim	6/12/00
DRAWN BY	S. Escobar	6/12/00
CHECKED BY	M. Fernandes	6/12/00
MTDB PRJ. ENG.		

MTDB
Metropolitan Transit Development Board
1255 Imperial Avenue, Suite 1000, San Diego, Ca. 92101-7490 (619)231-1466

IMPERIAL AVENUE DIVISION
BUS MAINTENANCE FACILITY

WINDOW SCHEDULE, TYPES AND DETAILS

SCALE	AS NOTED
MTDB CONTRACT NO.	
DRAWING NO.	A51.3
SHEET NO.	37

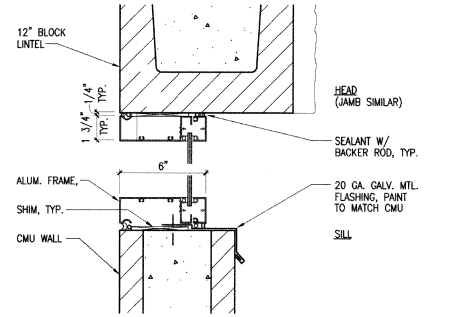

ALUMINUM WINDOW 6 A51.3
3"=1'-0"

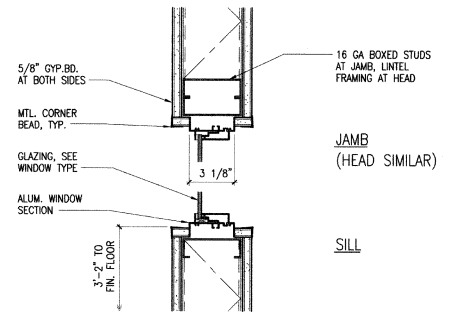

ALUMINUM WINDOW 3 A51.3
3"=1'-0"

WINDOW SCHEDULE

WINDOW TYPE	SIZE W x H	MATERIAL	FINISH	RATING	DETAILS HEAD	DETAILS JAMB	DETAILS SILL	WINDOW BLINDS	REMARKS
A	8'-0"W x 4'-6"H	STL	FACT	1HR	1/A51.3	2/A51.3	1/A51.3	Y	
B	6'-0"W x 4'-0"H	ALUM	ANOD AN-1	–	3/A51.3	3/A51.3	3/A51.3	Y	1/4" CLEAR TEMPERED GLASS
C	3'-4"W x 3'-4"H	ALUM	ANOD AN-1	–	4/A51.3	4/A51.3	4/A51.3	–	1/4" GREY FLOAT GLASS
D	14'-8"W x 4'-8"H	ALUM	ANOD AN-1	–	5/A51.3	5/A51.3	5/A51.3	–	
E	12'-0"W x 4'-8"H	ALUM	ANOD AN-1	–	5/A51.3	5/A51.3	5/A51.3	–	
F	8'-0"W x 4'-0"H	STL	FACT	1HR	1/A51.3	2/A51.3	1/51.3	Y	
G	18'-10"W x 4'-8"H	ALUM	ANOD AN-1	–	6/A51.3	6/A51.3	6/A51.3	–	
H	8'-0"W x 4'-0"H	ALUM	ANOD AN-1	–	3/A51.3	3/A51.3	3/A51.3	–	
J	1'-9"W x 3'-0"H	STL	FACT	1HR					

WINDOW TYPES

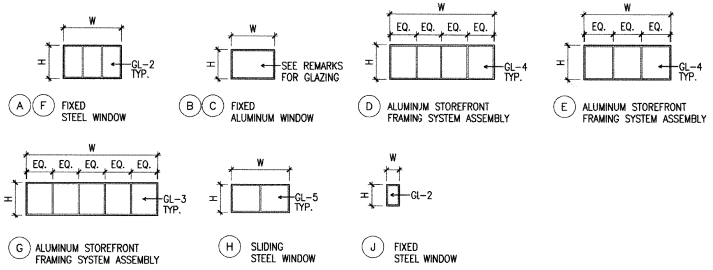

AS-BUILT
A. deBeaud
Contract No. BUS-443B
Date NOV. 2000

NOT USED 7 A51.3

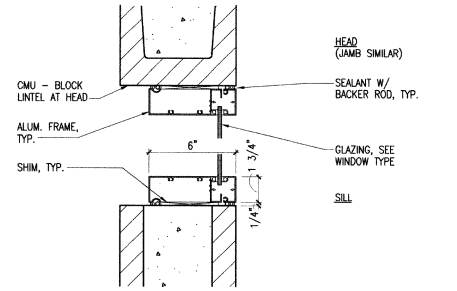

ALUMINUM WINDOW 4 A51.3
3"=1'-0"

NOT USED 8 A51.3

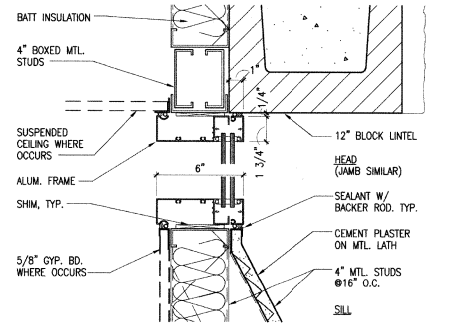

ALUMINUM WINDOW 5 A51.3
3"=1'-0"

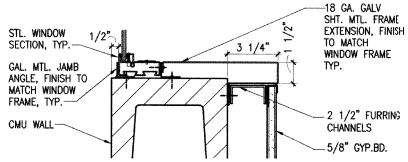

FIRE RATED WINDOW JAMB 2 A51.3
3"=1'-0"

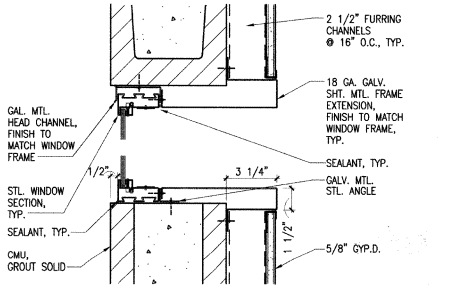

FIRE RATED WIN. HEAD & SILL 1 A51.3
3"=1'-0"

CONSTRUCTION CHANGE TABLE		
CHANGE	DATE	SHEET NUMBERS REVISED OR ADDED THIS CHANGE

STV Incorporated
ENGINEERS/ARCHITECTS/PLANNERS/CONSTRUCTION MANAGERS
1055 WILSHIRE BOULEVARD, SUITE 1455
LOS ANGELES, CALIFORNIA 90017-2499

LICENSED ARCHITECT C-24485 RENEWAL DATE STATE OF CALIFORNIA

		DATE
DESIGNED BY	K. Kim	12/17/98
DRAWN BY	S. Escobar	12/17/98
CHECKED BY	M. Fernandes	12/17/98
MTDB PRJ. ENG.		

MTDB
Metropolitan Transit Development Board
1255 Imperial Avenue, Suite 1000, San Diego, Ca. 92101-7490 (619)231-1466

IMPERIAL AVENUE DIVISION
BUS MAINTENANCE FACILITY

WINDOW SCHEDULE, TYPES AND DETAILS

SCALE	AS NOTED
MTDB CONTRACT NO.	BUS-443B
DRAWING NO.	A51.3
SHEET NO.	37

WALL FINISH SCHEDULE

ROOM NO.	ROOM NAME	FLOOR FINISH	NORTH			EAST			SOUTH			WEST			REMARKS
			MATERIAL	FINISH	BASE	MATERIAL	FINISH	BASE	MATERIAL	FINISH	BASE	MATERIAL	FINISH	BASE	
SECOND FLOOR															
214	CORRIDOR		GB			GB			GB			GB			
215	CUSTOMER SERVICE REPRESENTATIVE		GB			GB			GB			GB			
216	STORAGE		GB			GB			GB			GB			
217	DAY TRIPPER		GB			GB			GB			GB			
218	COMPUTER CLASSROOM		GB	AP*		GB	AP*		GB	AP*		GB	AP*		*PROVIDE ACOUSTICAL PANELS UP TO CEILING
219	STORAGE		GB			GB			GB			GB			
220	INSTRUCTOR'S OFFICE		GB			GB			GB			GB			
221	COMPUTER TRAINING ROOM		GB	AP*		GB	AP*		GB	AP*		GB	AP*		*PROVIDE ACOUSTICAL PANELS UP TO CEILING
222	DRIVER'S CLASSROOM		GB	AP*		GB	AP*		GB	AP*		GB	AP*		*PROVIDE ACOUSTICAL PANELS UP TO CEILING
223	TRAINING OFFICE		GB			GB			GB			GB			
224	Q.C. & PROJECT DEVELOPMENT		GB			GB			GB			GB			
225	OFFICE		GB			GB			GB			GB			
226	Q.C. WARRANTY		GB			GB			GB			GB			
227	STORAGE		GB			GB			GB			GB			
228	NOTUS		D												
229	NOTUS		D												
230	TELEPHONE INFORMATION		GB	AP*	RB-1	GB	AP*		GB	AP*		GB	AP*		*PROVIDE ACOUSTICAL PANELS UP TO CEILING
231	OFFICE		GB		RB-1	GB			GB			GB			
232	ATIS		GB		RB-1	GB			GB			GB			
233	INFORMATION EXPRESS		GB		RB-1	GB			GB			GB			
234	TEL. INFO. TRAINING CLASSROOM		GB		RB-1	GB			GB			GB			
235	CONFERENCE ROOM		GB	AP*	RB-1	GB	AP*		GB	AP*		GB	AP*		*PROVIDE ACOUSTICAL PANELS UP TO CEILING
236	CORRIDOR		GB		RB-1	GB			GB			GB			
237	TRAINING MANAGER		GB		RB-1	GB			GB			GB			
238	COMPUTER TRAINER		GB		RB-1	GB			GB			GB			
239	WOMEN'S RESTROOM		GB	CT	CT	GB	CT	CT	GB	CT	CT	GB	CT	CT	SEE ENLARGED PLANS & INTERIOR ELEVATIONS FOT TILE SIZES & COLORS
240	MEN'S RESTROOM		GB	CT	CT	GB	CT	CT	GB	CT	CT	GB	CT	CT	SEE ENLARGED PLANS & INTERIOR ELEVATIONS FOT TILE SIZES & COLORS

FOR PAINT SCHEDULE (SEE SHEET 107)
FOR FINISH SCHEDULE (SEE SHEET 107)

MATERIAL ABBREVIATIONS

AP	ACOUSTICAL PANEL
CP	CEMENT PLASTER
CRP	CARPET
CT	CERAMIC TILE
EF	EXPOSED METAL STUD FRAMING AND BATT INSULATION
EP	EPOXY PAINT
ES	EXPOSED STRUCTURE
GB	GYPSUM BOARD
HS	CONCRETE HARDENER/SEALER
P	PAINT
RB	RUBBER BASE
S	SEALER
SRC	STATIC RESISTANT CARPET TILE
VCT	VINYL COMPOSITION TILE
WM	WIRED MESH PARTITION

COLORS AND MATERIALS

CONCRETE MASONRY UNIT TYPES
(BY ANGELUS BLOCK)

- CMU-1: GRAY, MEDIUM WT. (ORANGE PLANT)
- CMU-2: 225, MEDIUM WT. (ORANGE PLANT)

MORTAR FOR CONCRETE MASONRY UNITS
(BY SPEC MIX)

- M-1: GRAY
- M-2: #255

CEMENT PLASTER
(BY LA HABRA STUCCO)

- CP-1: X-64 SEQUOIA
- CP-2: X-23 ASPEN

ALUMINUM STOREFRONT & WINDOWS
(BY KAWNEER)

- AN-1: BLACK

CERAMIC TILE
(BY DALTILE)

- CT-1: ICE GREY, K-776, MATTE
- CT-2: DESERT GREY, D-X114, SEMI-GLOSS
- CT-3: DENIM, DH-69, SEMI-GLOSS
- MT-1: SAPPHIRE, DK-399
- MT-2: WHITE ABRASIVE, DK-317

GLAZING
(BY LIBBY OWNS FORD)

- GL-1: 1/4" GREY TEMPERED GLASS
- GL-2: 1/4" CLEAR WIRE GLASS
- GL-3: 1/4" GREY FLOAT GLASS
- GL-4: GREY FLOAT - OUTBOARD PANE, CLEAR FLOAT - INBOARD PANE
- GL-5: 1/4" CLEAR TEMPERED GLASS

NOTES:

1. ALL INTERIOR FINISH SHALL COMPLY WITH U.B.C. CHAPTER 8.
2. PAINT ALL EXPOSED STRUCTURAL STEELS INCLUDING METAL DECKS, COLUMNS, BEAMS, JOIST, ETC. AND MISCELLANEOUS METALS INCLUDING STAIRS, RAILINGS, ETC. WITH COLOR P-2, UNLESS NOTED OTHERWISE.
3. MANUFACTURES LISTED ABOVE ARE FOR REFERENCE OF FINISH COLORS AND MATERIALS ONLY. SEE SPECIFICATIONS FOR COMPLETE LISTS OF ACCEPTABLE MANUFACTURES.

AS BUILT
G. deBrand
Contract No.
Date Nov. 2001

CONSTRUCTION CHANGE TABLE		
CHANGE	DATE	SHEET NUMBERS REVISED OR ADDED THIS CHANGE
1	4/17/00	SECOND FLOOR INTERIOR IMPROVEMENTS

STV Incorporated
ENGINEERS/ARCHITECTS/PLANNERS/CONSTRUCTION MANAGERS
1055 WILSHIRE BOULEVARD, SUITE 1455
LOS ANGELES, CALIFORNIA 90017-2499

REGISTERED ARCHITECT JOHN SOO KIM C-24286 7-31-01 RENEWAL STATE OF CALIFORNIA

		DATE
DESIGNED BY	K. Kim	6/12/00
DRAWN BY	S. Escobar	6/12/00
CHECKED BY	M. Fernandes	6/12/00
MTDB PRJ. ENG.		

MTDB
Metropolitan Transit Development Board
1255 Imperial Avenue, Suite 1000, San Diego, Ca. 92101-7490 (619)231-1466

IMPERIAL AVENUE DIVISION
BUS MAINTENANCE FACILITY

WALL FINISH SCHEDULE,
FINISH COLORS AND MATERIALS

SCALE	NO SCALE
MTDB CONTRACT NO.	BUS-443B
DRAWING NO.	A51.4
SHEET NO.	37A

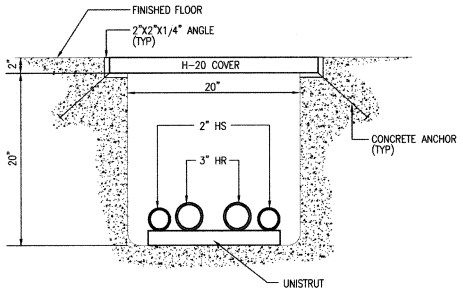

TRENCH SECTION 8 A60.1
NTS

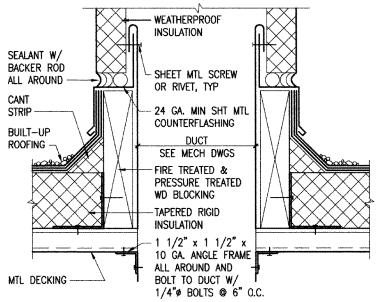

DUCT PENETRATION THRU ROOF 6 A60.1
3" = 1'-0"

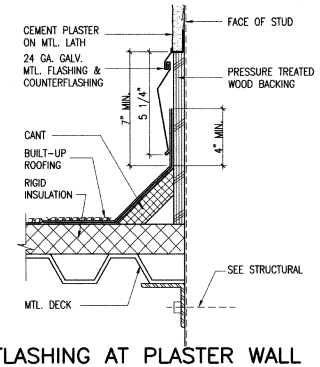

FLASHING AT PLASTER WALL 4 A60.1
3" = 1'-0"

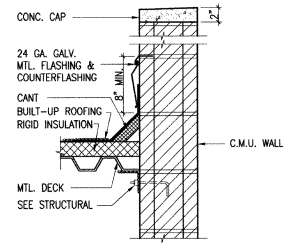

CMU PARAPET & FLASHING 1 A60.1
1 1/2"=1'-0"

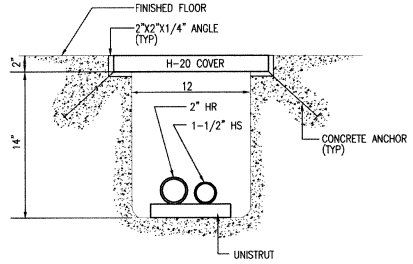

TRENCH SECTION 9 A60.1
NTS

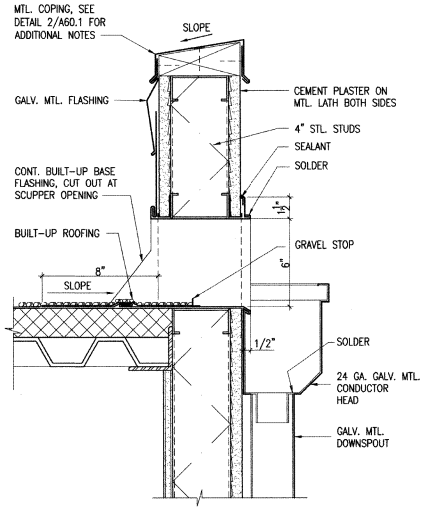

SCUPPER 7 A60.1
3" = 1'-0"

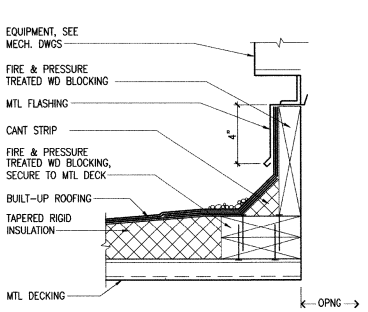

EQUIPMENT CURB 5 A60.1
3" = 1'-0"

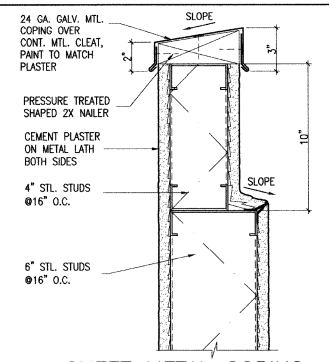

SHEET METAL COPING 2 A60.1
3"=1'-0"

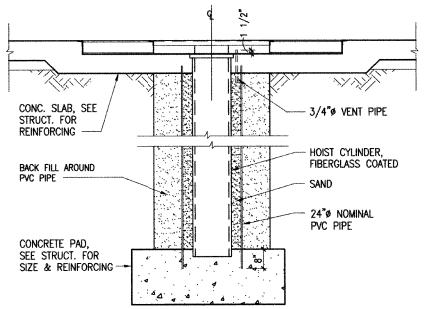

LIFT PIT 10 A60.1
1/2"=1'-0"

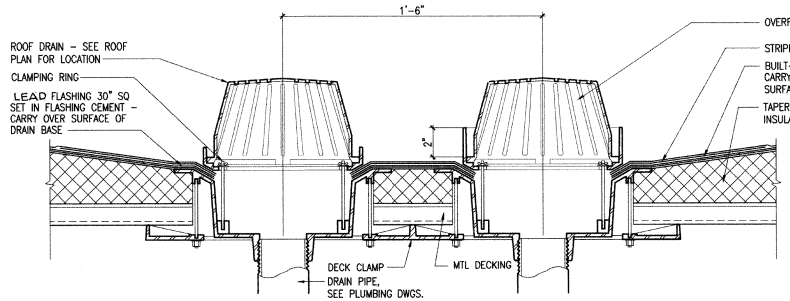

ROOF DRAIN & OVERFLOW DRAIN 3 A60.1
3" = 1'-0"

AS BUILT
Q. deBraal
Contract No. BUS-443B
Date NOV. 2000

CONSTRUCTION CHANGE TABLE		
CHANGE	DATE	SHEET NUMBERS REVISED OR ADDED THIS CHANGE

STV Incorporated
ENGINEERS/ARCHITECTS/PLANNERS/CONSTRUCTION MANAGERS
1055 WILSHIRE BOULEVARD, SUITE 1455
LOS ANGELES, CALIFORNIA 90017-2499

LICENSED ARCHITECT C-24485 STATE OF CALIFORNIA RENEWAL DATE

DESIGNED BY	K. Kim	12/17/98
DRAWN BY	S. Escobar	12/17/98
CHECKED BY	M. Fernandes	12/17/98
MTDB PRJ. ENG.		

MTDB
Metropolitan Transit Development Board
1255 Imperial Avenue, Suite 1000, San Diego, Ca. 92101-7490 (619)231-1466

IMPERIAL AVENUE DIVISION
BUS MAINTENANCE FACILITY

EXTERIOR AND TRENCH DETAILS

SCALE	AS NOTED
MTDB CONTRACT NO.	BUS-443B
DRAWING NO.	A60.1
SHEET NO.	38

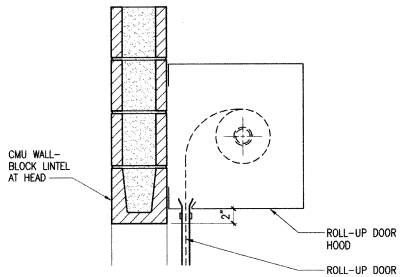

COUNTER FIRE DOOR HEAD 10 A60.3
1 1/2" = 1'-0"

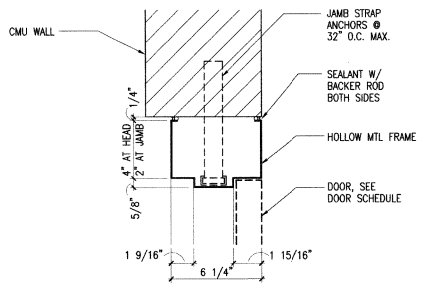

DOOR JAMB / HEAD SIMILAR 7 A60.3
3" = 1'-0"

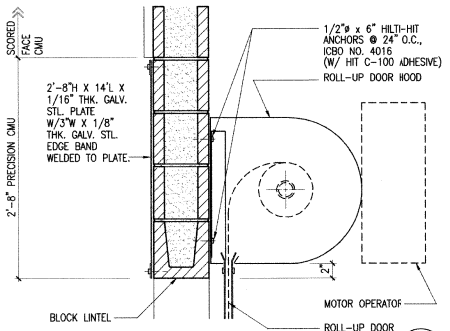

ROLL-UP DOOR HEAD 4 A60.3
1 1/2" = 1'-0"

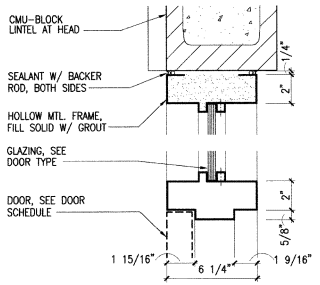

DOOR HEAD / TRANSOM 1 A60.3
3" = 1'-0"

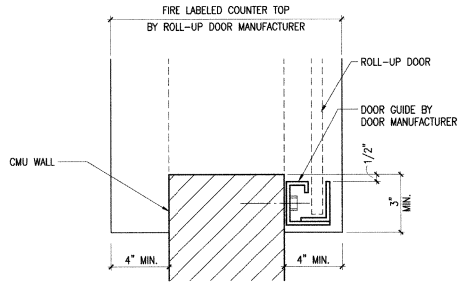

COUNTER FIRE DOOR JAMB 11 A60.3
3" = 1'-0"

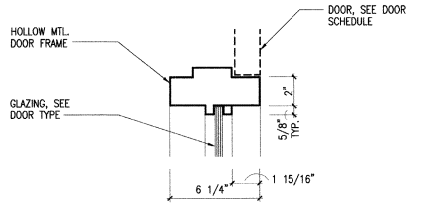

DOOR JAMB AT SIDE LITE 8 A60.3
3" = 1'-0"

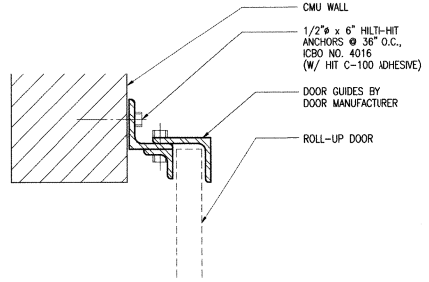

ROLL-UP DOOR JAMB 5 A60.3
3" = 1'-0"

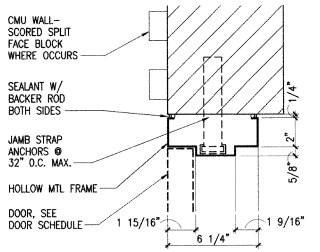

DOOR JAMB 2 A60.3
3" = 1'-0"

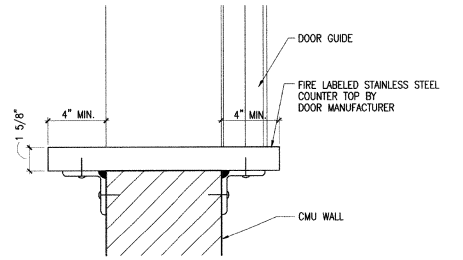

FIRE RATED COUNTER 12 A60.3
3" = 1'-0"

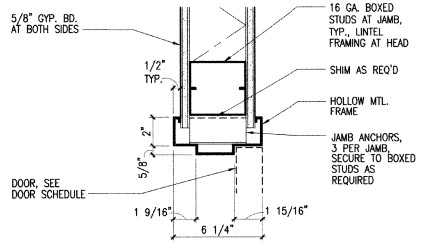

DOOR JAMB / HEAD SIMILAR 9 A60.3
3" = 1'-0"

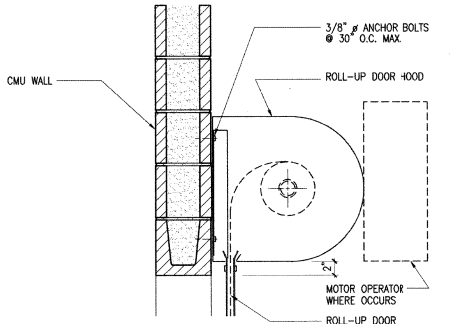

ROLL-UP DOOR HEAD 6 A60.3
1 1/2" = 1'-0"

AS-BUILT
Q. dBrand
Contract No BUS-443B
Date NOV. 2000

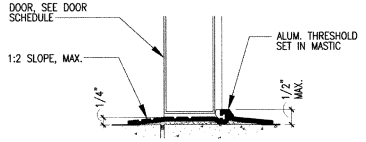

THRESHOLD 3 A60.3
HALF FULL SCALE

CONSTRUCTION CHANGE TABLE		
CHANGE	DATE	SHEET NUMBERS REVISED OR ADDED THIS CHANGE

STV Incorporated
ENGINEERS/ARCHITECTS/PLANNERS/CONSTRUCTION MANAGERS
1055 WILSHIRE BOULEVARD, SUITE 1455
LOS ANGELES, CALIFORNIA 90017-2499

LICENSED ARCHITECT RICHARD SODA C-24485 RENEWAL DATE STATE OF CALIFORNIA

		DATE
DESIGNED BY	K. Kim	12/17/98
DRAWN BY	S. Escobar	12/17/98
CHECKED BY	M. Fernandes	12/17/98
MTDB PRJ. ENG.		

MTDB
Metropolitan Transit Development Board
1255 Imperial Avenue, Suite 1000, San Diego, Ca. 92101-7490 (619)231-1466

IMPERIAL AVENUE DIVISION
BUS MAINTENANCE FACILITY

DOOR DETAILS

SCALE	AS NOTED
MTDB CONTRACT NO.	BUS-443B
DRAWING NO.	A60.3
SHEET NO.	39

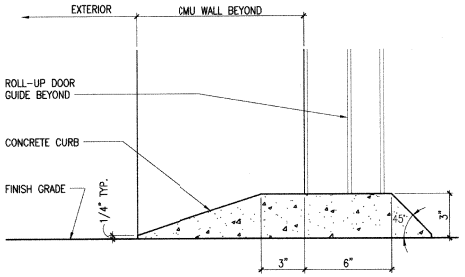

CONCRETE CURB 8 A60.4
3" = 1'-0"

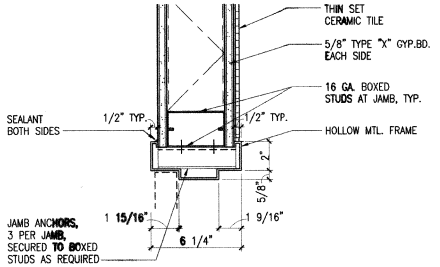

DOOR JAMB / HEAD SIMILAR 5 A60.4
3" = 1'-0"

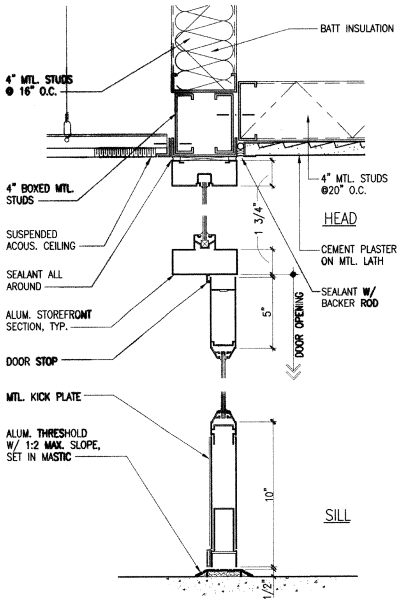

STOREFRONT HEAD 3 A60.4
3" = 1'-0"

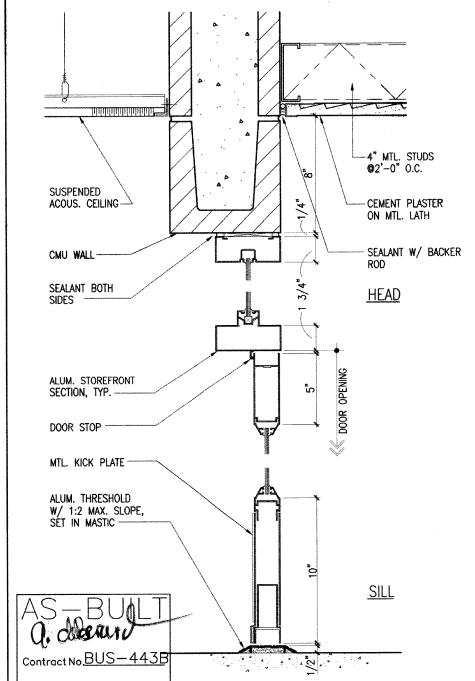

AS-BUILT
Contract No. BUS-443B
Date NOV. 2000

STOREFRONT 1 A60.4
3" = 1'-0"

NOT USED 9 A60.4

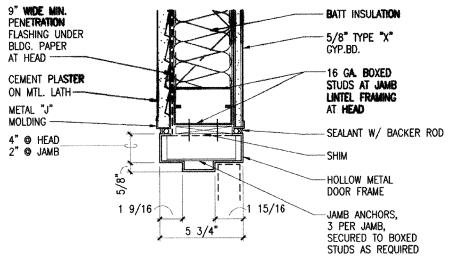

DOOR HEAD / JAMB SIMILAR 6 A60.4
3" = 1'-0"

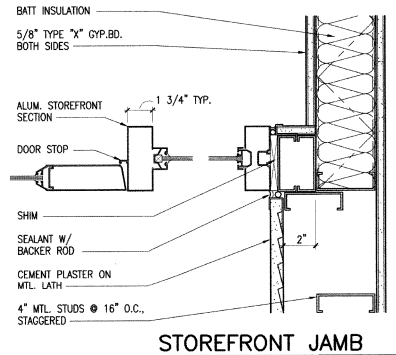

STOREFRONT JAMB 4 A60.4
3" = 1'-0"

NOT USED 10 A60.4

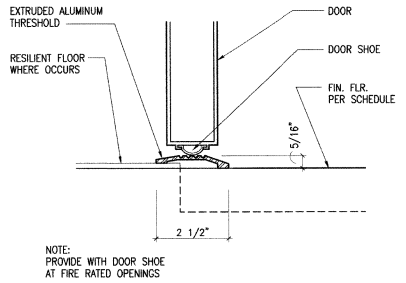

THRESHOLD 7 A60.4
HALF FULL SCALE

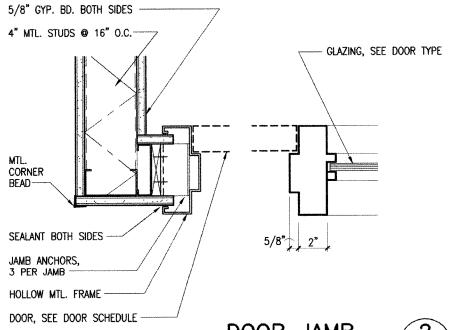

DOOR JAMB 2 A60.4
3" = 1' - 0"

CONSTRUCTION CHANGE TABLE		
CHANGE	DATE	SHEET NUMBERS RE/ISED OR ADDED THIS CHANGE

STV Incorporated
ENGINEERS/ARCHITECTS/PLANNERS/CONSTRUCTION MANAGERS
1055 WILSHIRE BOULEVARD, SUITE 1455
LOS ANGELES, CALIFORNIA 90017-2499

LICENSED ARCHITECT TOM SOO, K.W. C-24485 RENEWAL DATE STATE OF CALIFORNIA

		DATE
DESIGNED BY	K. Kim	12/17/98
DRAWN BY	S. Escobar	12/17/98
CHECKED BY	M. Fernandes	12/17/98
MTDB PRJ. ENG.		

MTDB
Metropolitan Transit Development Board
1255 Imperial Avenue, Suite 1000, San Diego, Ca. 92101-7490 (619)231-1466

IMPERIAL AVENUE DIVISION
BUS MAINTENANCE FACILITY

DOOR AND WINDOW DETAILS

SCALE	AS NOTED
MTDB CONTRACT NO.	BUS-443B
DRAWING NO.	A60.4
SHEET NO.	40

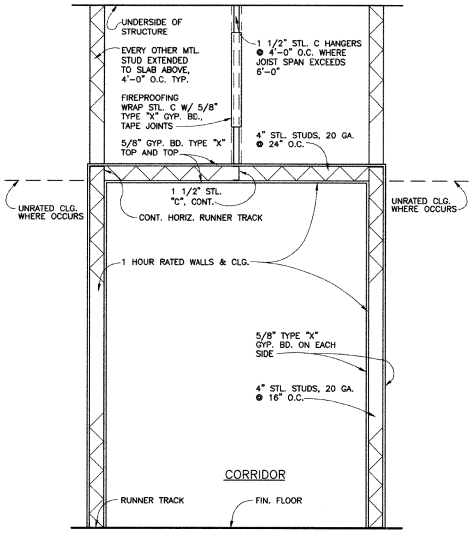

ONE-HOUR RATED CORRIDOR 8 / A61.1

3" = 1'-0"

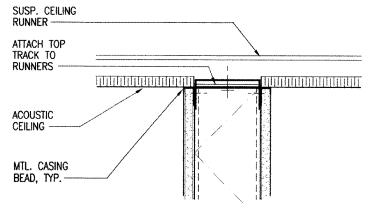

PARTITION AT SUSPENDED CLG. 5 / A61.1

3" = 1'-0"

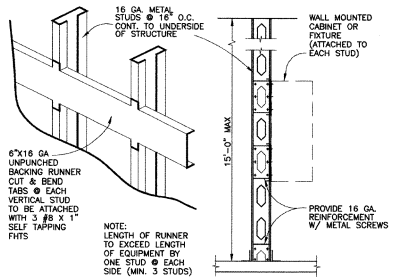

TYPICAL STUD BACKING DETAIL 2 / A61.1

NOT TO SCALE

PARTITION TYPES

1. 2-1/2" FURRING CHANNELS, 20 GA., AT 16" O.C. ON CONCRETE MASONRY UNITS, 5/8" GYPSUM WALLBOARD ONE SIDE, HEIGHT TO 6" ABOVE CEILING. CERAMIC TILE FINISH WHERE OCCURS, PER WALL FINISH SCHEDULE.
2. NOT USED
3. 3-5/8" STEEL STUDS, 20 GA., AT 16" O.C., HEIGHT TO UNDERSIDE OF SUSPENDED CEILING RUNNER. 5/8" GYPSUM WALLBOARD EACH SIDE. SEE DETAIL 5/A61.1.
4. 3-5/8" STEEL STUDS, 20 GA., AT 16" O.C., HEIGHT TO UNDERSIDE OF OVERHEAD STRUCTURE. 5/8" GYPSUM WALLBOARD; HEIGHT TO 6" ABOVE CEILING ONE SIDE, TO FULL HEIGHT THE OTHER SIDE. CERAMIC TILE FINISH WHERE OCCURS, PER WALL FINISH SCHEDULE.
5. 3-5/8" STEEL STUDS, 20 GA., AT 16" O.C., HEIGHT TO UNDERSIDE OF OVERHEAD STRUCTURE. 5/8" GYPSUM WALLBOARD ONE SIDE, HEIGHT TO 6" ABOVE CEILING. CERAMIC TILE FINISH WHERE OCCURS, PER WALL FINISH SCHEDULE.
6. DRY SET CERAMIC TILE FINISH ON CONCRETE MASONRY UNITS, HEIGHT TO UNDERSIDE OF CEILING.
7. 3-5/8" STEEL STUDS, 20 GA., AT 16" O.C., HEIGHT TO UNDERSIDE OF SUSPENDED CEILING RUNNER. 5/8" GYPSUM WALLBOARD EACH SIDE. CERAMIC TILE FINISH WHERE OCCURS, PER WALL FINISH SCHEDULE.
8. 3-5/8" STEEL STUDS, 20 GA., AT 16" O.C., HEIGHT TO UNDERSIDE OF OVERHEAD STRUCTURE. 5/8" TYPE "X" GYPSUM WALLBOARD EACH SIDE TO FULL HEIGHT. CERAMIC TILE FINISH WHERE OCCURS, PER WALL FINISH SCHEDULE. SEE DETAILS 3 & 4/A61.1 FOR PARTITION TOP AND BASE DETAILS. (ONE-HOUR RATED PARTITION CONSTRUCTION PER UBC TABLE 7-B, ITEM NO. 16-1.1)
9. 3-5/8" STEEL STUDS, 20 GA., AT 16" O.C., HEIGHT TO UNDERSIDE OF OVERHEAD STRUCTURE. 5/8" GYPSUM WALLBOARD EACH SIDE TO FULL HEIGHT.
10. ONE-HOUR RATED CORRIDOR CONSTRUCTION. SEE DETAIL 8/A61.1.
11. 3-5/8" STEEL STUDS, 20 GA., AT 16" O.C., HEIGHT TO 6" ABOVE CEILING, BRACE AS REQUIRED TO OVERHEAD STRUCTURE AT 4'-0" O.C. MINIMUM, STAGGERED. 5/8" GYPSUM WALLBOARD EACH SIDE, HEIGHT TO 6" ABOVE CEILING. CERAMIC TILE FINISH WHERE OCCURS, PER WALL FINISH SCHEDULE.
12. 3-5/8" STEEL STUDS, 20 GA., AT 16" O.C., HEIGHT TO UNDERSIDE OF OVERHEAD STRUCTURE. 5/8" GYPSUM WALLBOARD ONE SIDE, HEIGHT TO 6" ABOVE CEILING.
13. 3-5/8" STEEL STUDS, 20 GA., AT 16" O.C., HEIGHT TO 6" ABOVE CEILING, BRACE AS REQUIRED. 5/8" GYPSUM WALLBOARD ONE SIDE, HEIGHT TO 6" ABOVE CEILING.

AS-BUILT
Contract No. BUS-443B
Date NOV. 2000

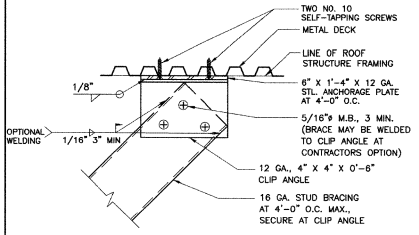

TYPICAL BRACING TO UNDERSIDE OF STRUCTURE 6 / A61.1

3" = 1'-0"

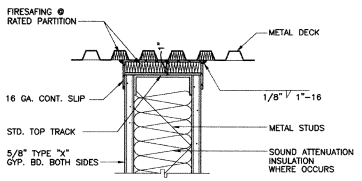

PARTITION AT METAL DECK 3 / A61.1

NOT TO SCALE

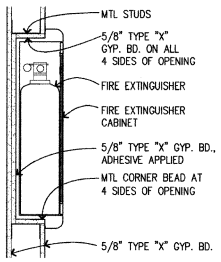

FIRE EXTINGUISHER CABINET 9 / A61.1

1 1/2" = 1'-0"

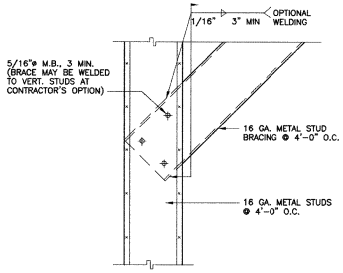

TYPICAL STUD BRACING 7 / A61.1

3" = 1'-0"

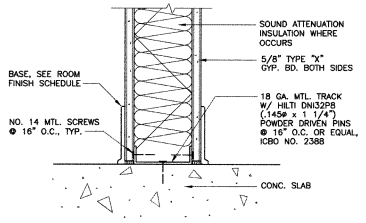

TYPICAL PARTITION BASE 4 / A61.1

3" = 1'-0"

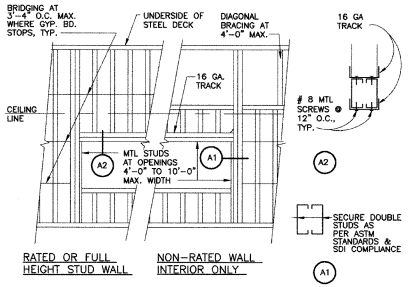

TYPICAL STUD FRAMING 1 / A61.1

NOT TO SCALE

CONSTRUCTION CHANGE TABLE		
CHANGE	DATE	SHEET NUMBERS REVISED OR ADDED THIS CHANGE
1	6/28/99	ADDENDUM NO. 1
2	4/17/00	SECOND FLOOR INTERIOR IMPROVEMENTS

STV Incorporated
ENGINEERS/ARCHITECTS/PLANNERS/CONSTRUCTION MANAGERS
1055 WILSHIRE BOULEVARD, SUITE 1455
LOS ANGELES, CALIFORNIA 90017-2499

LICENSED ARCHITECT — JOHN SOO KIM — C-24485 — RENEWAL DATE — STATE OF CALIFORNIA

		DATE
DESIGNED BY	K. Kim	12/17/98
DRAWN BY	S. Escobar	12/17/98
CHECKED BY	M. Fernandes	12/17/98
MTDB PRJ. ENG.		

MTDB
Metropolitan Transit Development Board
1255 Imperial Avenue, Suite 1000, San Diego, Ca. 92101-7490 (619)231-1466

IMPERIAL AVENUE DIVISION
BUS MAINTENANCE FACILITY

PARTITION TYPES AND
METAL STUD FRAMING DETAILS

SCALE	AS NOTED
MTDB CONTRACT NO.	BUS-443B
DRAWING NO.	A61.1
SHEET NO.	41

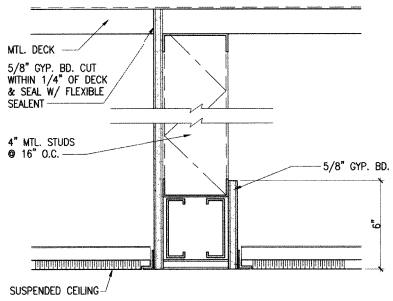

DRAFT STOP 10 A61.2
3" = 1'-0"

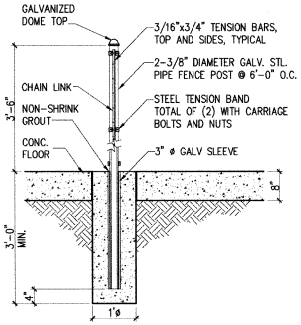

CHAIN LINK FENCE 7 A61.2
3/4" = 1'-0"

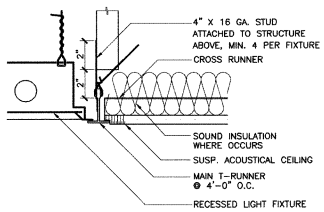

RECESSED LIGHT FIXTURE AT ACOUSTICAL CEILING 4 A61.2
3" = 1'-0"

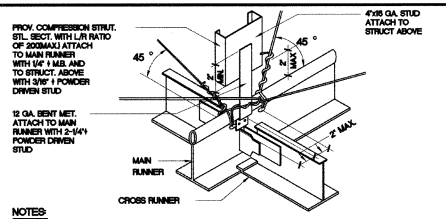

NOTES:
1. #12 GA. SPLAY WIRE BRACING IN PLANE OF EACH RUNNER VERTICAL ANGLE-45 AT EVERY 44 SQ.FT. OF SUSPENDED ACOUSTICAL CEILING. PERIMETER END BRACING STARTS 4'-0" FROM WALL AND 12'-0" O.C. TO ROOMS
2. PROVIDE UNISTRUT HORIZONTAL MEMBERS TO SUPPORT SPLAY WIRES WHENEVER THERE IS A CONFLICT WITH DUCT LOCATION AND/OR FLEXIBLE PIPING.
3. AT PLASTER SOFFIT + ROOF PROVIDE THE FOLLOWING:
   a) COMPRESSION STRUTS @ 4'-0" X 4'-0"
   b) P1001 UNISTRUT CEILING MAIN RUNNERS @ 4'-0" O.C.
   c) 12 GA. WIRE BRACINGS (4'-0" X 4'-0" MODULE)
4. POWDER DRIVEN FASTNERS: HILTI DN27P5 PINS OR EQUAL (ICBO NO 2388)

SEISMIC BRACING AT TEE BARS 1 A61.2
3" = 1'-0"

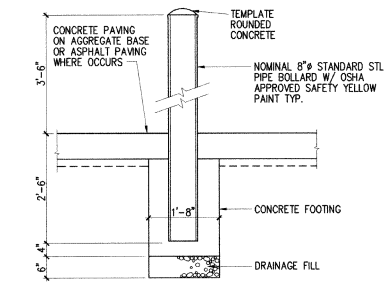

STEEL BOLLARD 11 A61.2
3/4"=1'-0"

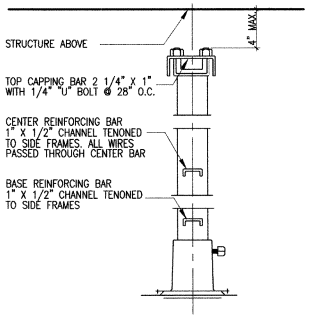

WIRE MESH SUPPORT 8 A61.2
HALF FULL SCALE

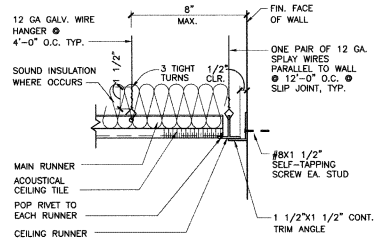

SUSPENDED JOINT AT CORRIDOR WALL 5 A61.2
3" = 1'-0"

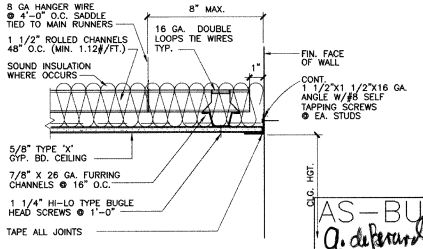

AS-BUILT
A. deBernardi
Contract No. BUS-443B
Date NOV. 2000

GYPSUM BOARD CEILING AT PERIMETER 2 A61.2
3" = 1'-0"

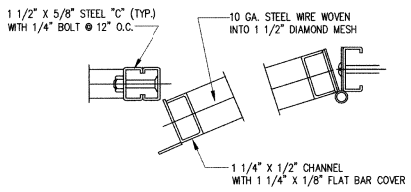

WIRE MESH GATE 12 A61.2
HALF FULL SCALE

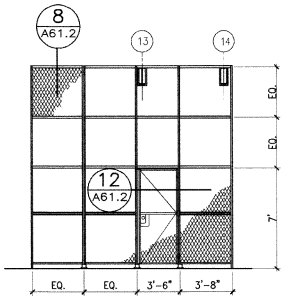

WIRE MESH PARTITION ELEVATION 9 A61.2
1/4"=1'-0"

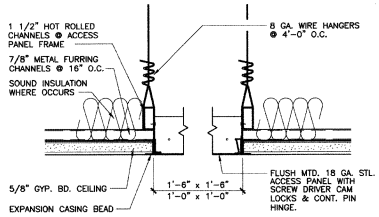

CEILING ACCESS PANEL – SUSPENDED GYP. BD. CEILING 6 A61.2
3" = 1'-0"

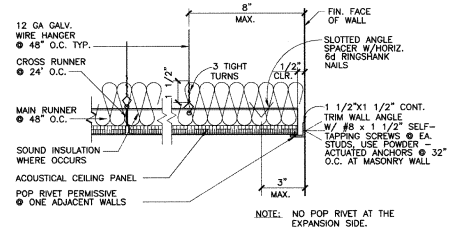

NOTE: NO POP RIVET AT THE EXPANSION SIDE.

ACOUSTICAL CEILING AT PERIMETER EXPANSION 3 A61.2
3" = 1'-0"

CONSTRUCTION CHANGE TABLE		
CHANGE	DATE	SHEET NUMBERS REVISED OR ADDED THIS CHANGE

STV Incorporated
ENGINEERS/ARCHITECTS/PLANNERS/CONSTRUCTION MANAGERS
1055 WILSHIRE BOULEVARD, SUITE 1455
LOS ANGELES, CALIFORNIA 90017-2499

REGISTERED ARCHITECT C-24485 RENEWAL DATE STATE OF CALIFORNIA

DESIGNED BY	K. Kim	12/17/98
DRAWN BY	S. Escobar	12/17/98
CHECKED BY	M. Fernandes	12/17/98
MTDB PRJ. ENG.		

MTDB
Metropolitan Transit Development Board
1255 Imperial Avenue, Suite 1000, San Diego, Ca. 92101-7490 (619)231-1466

IMPERIAL AVENUE DIVISION
BUS MAINTENANCE FACILITY

CEILING AND MISCELLANEOUS DETAILS

SCALE	AS NOTED
MTDB CONTRACT NO.	BUS-443B
DRAWING NO.	A61.2
SHEET NO.	42

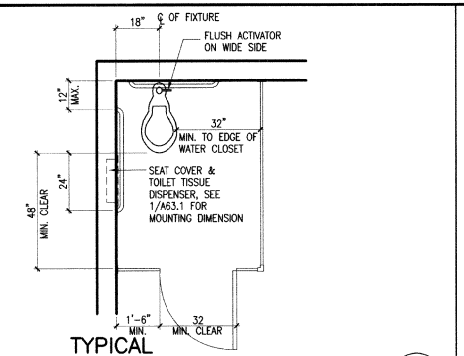

TYPICAL ACCESSIBLE TOILET PLAN

NOT TO SCALE

8 A63.1

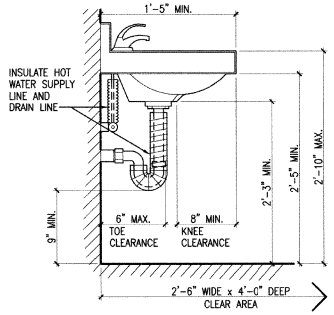

LAVATORY

NOT TO SCALE

5 A63.1

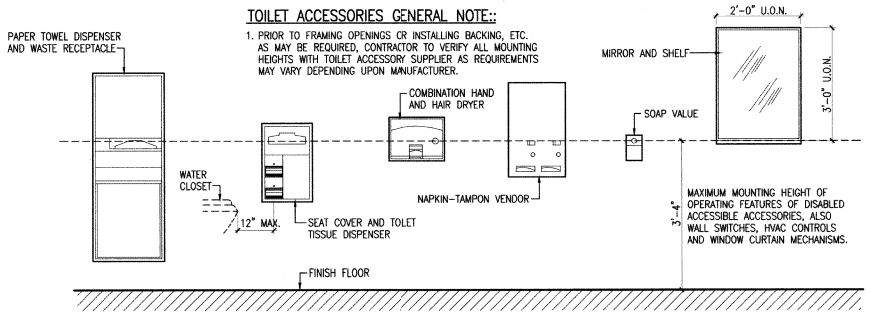

TOILET ACCESSORIES

(MOUNTING HEIGHTS FOR ACCESSORIES FOR DISABLED ACCESSIBILITY)

NOT TO SCALE

1 A63.1

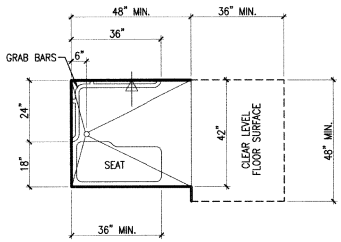

TYPICAL ACCESSIBLE SHOWER PLAN

NOT TO SCALE

9 A63.1

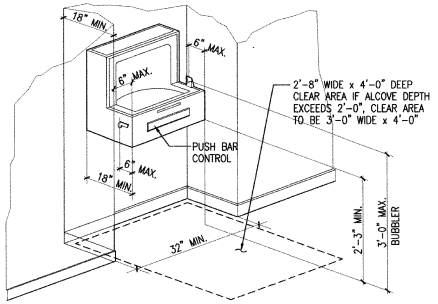

ELECTRIC WATER COOLER

NOT TO SCALE

6 A63.1

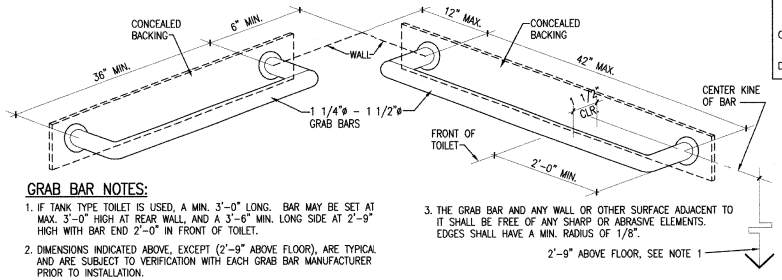

GRAB BAR NOTES:

1. IF TANK TYPE TOILET IS USED, A MIN. 3'-0" LONG. BAR MAY BE SET AT MAX. 3'-0" HIGH AT REAR WALL, AND A 3'-6" MIN. LONG SIDE AT 2'-9" HIGH WITH BAR END 2'-0" IN FRONT OF TOILET.
2. DIMENSIONS INDICATED ABOVE, EXCEPT (2'-9" ABOVE FLOOR), ARE TYPICAL AND ARE SUBJECT TO VERIFICATION WITH EACH GRAB BAR MANUFACTURER PRIOR TO INSTALLATION.
3. THE GRAB BAR AND ANY WALL OR OTHER SURFACE ADJACENT TO IT SHALL BE FREE OF ANY SHARP OR ABRASIVE ELEMENTS. EDGES SHALL HAVE A MIN. RADIUS OF 1/8".

AS-BUILT
Q. deBoard
Contract No. BUS-443B
Date NOV. 2000

TOILET ACCESSORIES (GRAB BAR)

NOT TO SCALE

2 A63.1

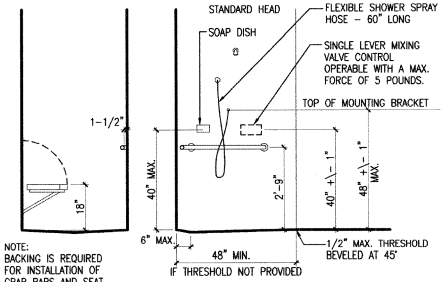

NOTE:
BACKING IS REQUIRED FOR INSTALLATION OF GRAB BARS AND SEAT

TYPICAL ACCESSIBLE SHOWER ELEVATIONS

NOT TO SCALE

10 A63.1

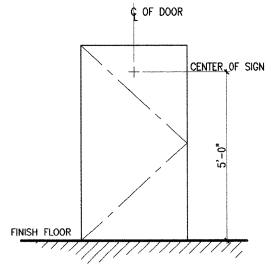

RESTROOM SIGN LOCATION

NOT TO SCALE

7 A63.1

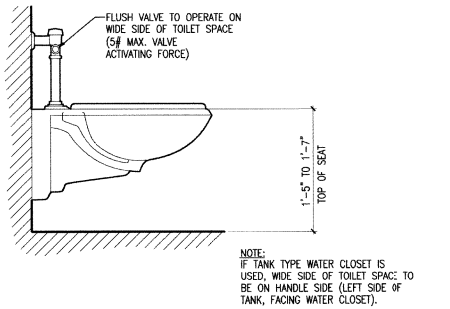

NOTE:
IF TANK TYPE WATER CLOSET IS USED, WIDE SIDE OF TOILET SPACE TO BE ON HANDLE SIDE (LEFT SIDE OF TANK, FACING WATER CLOSET).

WATER CLOSET

NOT TO SCALE

4 A63.1

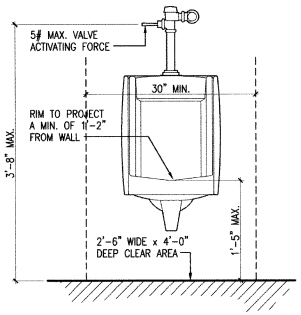

URINAL

NOT TO SCALE

3 A63.1

CONSTRUCTION CHANGE TABLE		
CHANGE	DATE	SHEET NUMBERS REVISED OR ADDED THIS CHANGE

STV Incorporated
ENGINEERS/ARCHITECTS/PLANNERS/CONSTRUCTION MANAGERS
1055 WILSHIRE BOULEVARD, SUITE 1455
LOS ANGELES, CALIFORNIA 90017-2499

LICENSED ARCHITECT — NEW SOD TYPE — C-24485 — RENEWAL DATE — STATE OF CALIFORNIA

DESIGNED BY	K. Kim	12/17/98
DRAWN BY		
CHECKED BY	M. Fernandes	12/17/98
MTDB PRJ. ENG.		

MTDB
Metropolitan Transit Development Board
1255 Imperial Avenue, Suite 1000, San Diego, Ca. 92101-7490 (619)231-1466

IMPERIAL AVENUE DIVISION
BUS MAINTENANCE FACILITY

TYPICAL DISABLED ACCESS DETAILS

SCALE	AS NOTED
MTDB CONTRACT NO.	BUS-443B
DRAWING NO.	A63.1
SHEET NO.	43

ATTACHMENT A

SUMMARY OF SPECIAL INSPECTION

1 CONCRETE
2 BOLTS INSTALLED IN CONCRETE
3 CONCRETE MOMENT RESISTING SPACE FRAME
4 REINFORCING STEEL AND PRESTRESSING STEEL
5A WELD TESTING. DUCTILE MOMENT RESISTING STEEL FRAMES
5B ALL STRUCTURAL WELDING INCLUDING REINFORCING STEEL
6 HIGH-STRENGTH BOLTING
7 STRUCTURAL MASONRY
8 REINFORCED GYPSUM CONCRETE
9 INSULATING CONCRETE FILL
10 SPRAY-APPLIED FIREPROOFING
11 DEEP FOUNDATIONS (PILING, DRILLED PIERS & CAISSONS)
12 SHOTCRETE

13A VERIFY SOIL CONDITIONS ARE SUBSTANTIALLY IN CONFORMANCE WITH THE SOIL INVESTIGATION REPORT
13B VERIFY THAT FOUNDATION EXCAVATIONS EXTEND TO PROPER DEPTH AND BEARING STRATA
13C PROVIDE SOIL COMPACTION TEST RESULTS, DEPTH OF FILL, RELATIVE DENSITY, BEARING VALUES
13D PROVIDE SOIL EXPANSION TEST RESULTS, EXPANSION INDEX, RECOMMENDATIONS FOR FOUNDATIONS, ON GRADE FLOOR SLAB DESIGN FOR EACH BUILDING SITE
14 SPECIAL CASES (DESCRIBE)
15 OFF-SITE FABRICATION OF BUILDING COMPONENTS
16 OTHER STRUCTURAL INSPECTIONS AS REQUIRED BY DESIGNER

NO.	ITEM	CONTINUOUS INSPECTION	PERIODIC INSPECTION	REMARK
1	CONCRETE (ALL CONC. UNO)	YES	-----	DESIGN = 3000 PSI
2	EXPANSION AND EPOXY ANCHORS	YES	----	---
3	CONCRETE (SLAB-ON-GRADE)	NO	YES	DESIGN = 2000 PSI QUALITY = 3000 PSI
7	STRUCTURAL MASONRY (ALL MASONRY)	YES	---	f'm = 2000 PSI
	FIELD WELDING	YES	----	E70XX
	CONCRETE DECK	NO	YES	DESIGN = 3000 PSI

A. THE CONSTRUCTION INSPECTIONS LISTED ARE IN ADDITION TO THE CALLED INSPECTIONS REQUIRED BY SECTION 1701 OF THE UNIFORM BUILDING CODE. SPECIAL INSPECTION IS NOT A SUBSTITUTE FOR INSPECTION BY A CITY INSPECTOR. SPECIALLY INSPECTED WORK WHICH IS INSTALLED OR COVERED WITHOUT THE APPROVAL OF THE CITY INSPECTOR IS SUBJECT TO REMOVAL OR EXPOSURE.

B. CONTINUOUS INSPECTION IS ALWAYS REQUIRED DURING THE PERFORMANCE OF THE WORK UNLESS OTHERWISE SPECIFIED.

C. THE SPECIAL INSPECTORS MUST BE CERTIFIED BY THE BUILDING OFFICIAL TO PERFORM THE TYPES OF INSPECTION SPECIFIED.

D. IT IS THE RESPONSIBILITY OF THE CONTRACTOR TO INFORM THE SPECIAL INSPECTOR OR INSPECTION AGENCY AT LEAST ONE WORKING DAY PRIOR TO PERFORMING ANY WORK THAT REQUIRES SPECIAL INSPECTION. ALL WORK PERFORMED WITHOUT REQUIRED SPECIAL INSPECTION IS SUBJECT TO REMOVAL.

SPECIAL INSPECTIONS:

1. SPECIAL INSPECTION: PER UBC CHAPTER 17 SECTION 1701.
DUTIES & RESPONSIBILITIES OF THE INSPECTOR:
A. THE SPECIAL INSPECTOR SHALL OBSERVE THE WORK ASSIGNED FOR CONFORMANCE WITH THE APPROVED DESIGN DRAWINGS AND SPECIFICATIONS.
B. THE SPECIAL INSPECTOR SHALL FURNISH INSPECTION REPORTS TO THE BUILDING OFFICIAL. THE ENGINEER OR ARCHITECT OF RECORD & OTHER DESIGNATED PERSONS. ALL DISCREPANCIES SHALL BE BROUGHT TO THE IMMEDIATE ATENTION OF THE CONTRACTOR FOR CORRECTION, THEN IF UNCORRECTED TO THE PROPER DESIGN AUTHORITY AND TO THE BUILDING OFFICIAL.
C. THE SPECIAL INSPECTOR SHALL SUBMIT A FINAL SIGNED REPORT STATING WHETHER THE WORK REQUIRING SPECIAL INSPECTION WAS, TO THE BEST O' THE INSPECTOR'S KNOWLEDGE, IN CONFORMANCE WITH THE APPROVED PLANS AND SPECIFICATIONS AND THE APPLICABLE WORKMANSHP PROVISION OF THE CURRENT BUILDING CODE.

2. IN ADDITION TO INSPECTIONS REQUIRED BY UBC 94, CHAPTER 17, SPECIAL INSPECTIONS SHALL BE PROVIDED BY SPECIAL INSPECTORS DURING CONSTRUCTION ON THE FOLLOWING TYPES OF WORK:

A. CONCRETE: DURING THE TAKING OF TEST SPECIMENS AND PLACING OF REINFORCED CONCRETE.

B. BOLTS INSTALLED IN CONCRETE: DURING INSTALLATION OF BOLTS AND PLACING OF CONCRETE AROUND SUCH BOLTS.

C. REINFORCING STEEL: DURING PLACING OF REINFORCING STEEL FOR ALL CONCRETE REQUIRED TO HAVE SPECIAL INSPECTION BY ITEM NO. 1.

D. WELDING: ALL STRUCTURAL WELDING, INCLUDING WELDING OF REINFORCING STEEL, EXCEPT WHEN WELDING IS DONE IN AN APPROVED FABRICATOR'S SHOP.

3. SPECIAL INSPECTOR: THE SPECIAL INSPECTOR SHALL BE A QUALIFIED PERSON WHO SHALL DEMONSTRATE HIS COMPETENCE, TO THE SATISFACTION OF THE BUILDING OFFICIAL, FOR INSPECTION OF THE PARTICULAR TYPE OF CONSTRUCTION OR OPERATION REQUIRING SPECIAL INSPECTION.

STRUCTURAL OBSERVATION: PER UBC CHAPTER 17 SECTION 1701.6 THE OWNER SHALL EMPLOY \ LICENSED ENGINEER OR ARCHITECT RESPONSIBLE FOR THE STRUCTURAL DESIGN, OR HIS DESIGNATED ENGINEER OR ARCHITECT TO MAKE SITE VISITS TO OBSERVE GENERAL COMPLIANCE WITH THE APPROVED STRUCTURAL PLANS ,SPECIFICATIONS AND CHANGE ORDERS. THE ENGINEER OR ARCHITECT SHALL SUBMIT A STATEMENT IN WRITING TO THE BUILDING OFFICIAL STATING THAT THE SITE VISIT HAVE BEEN MADE AND THAT ANY DEFICIENCIES NOTED HAVE BEEN CORRECTED.

GENERAL FOUNDATION NOTES

1. ATTACH ONE COPY OF SOILS REPORT TO THE APPROVED SET. SOILS REPORT SHALL BE PART OF THESE NOTES. PRIOR TO THE POURING OF CONCRETE AND PRIOR TO THE CONTRACTOR REQUESTING A BUILDING DEPARTMENT FOUNDATION INSPECTION, THE GEOTECHNICAL ENGINEER SHALL INSPECT AND APPROVE THE FOOTING EXCAVATIONS. HE SHALL POST NOTICE ON THE JOB SITE AND ADVISE BUILDING INSPECTOR IN WRITING THAT THE WORK SO INSPECTED MEETS THE CONDITIONS OF THE REPORT. A WRITTEN CERTIFICATION TO VERIFY THAT:
A. THE BUILDING PAD WAS PREPARED IN ACCORDANCE WITH THE SOIL REPORT .
B. THE UTILITY TRENCHES HAVE BEEN PROPERLY BACKFILLED AND COMPACTED, AND
C. THE FOUNDATION EXCAVATIONS COMPLY WITH THE INTENT OF THE SOILS REPORT.
THE WRITTEN CERTIFICATION SHALL BE FILED WITH THE BUILDING DEPARTMENT UPON COMPLETION OF THE WORKS. THIS INSPECTION DOES NOT WAIVE THE REQUIRED INSPECTION BY THE BUILDING INSPECTOR.

2. GEOTECHNICAL REPORT:
GEOTECHNICAL AND LIMITED ENVIRONMENTAL EXPLORATION PROGRAM, PROPOSED BUILDING 2 BUS MAINTENANCE FACILITY, IMPERIAL AVENUE DIVISION, 100 16th STREET, SAN DIEGO, CALIFORNIA, BY EARTH TECH, DATED NOVEMBER 17, 1997.

3. SOIL REMOVAL AND RECOMPACTION SHALL BE DONE PER SOILS REPORT RECOMMENDATIONS UNDER GEOTECHNICAL ENGINEER'S SUPERVISION AND INSPECTION.

4. TYPE OF FOOTING:
A. SHALLOW FOOTING SYSTEM MINIMUM EMBEDMENT: 18" BELOW LOWEST ADJACENT GRADE DESIGN SOIL PRESSURE:

FOOTING TYPE	STATIC BEARING PRESSURE (PSF)
SPREAD FOOTINGS	2500
CONTINUOUS FOOTING	2000

5. SLAB BASE AND COMPACTION TO BE IN ACCORDANCE WITH SOIL REPORT

6. FOR ALL DIMENSIONS, CURBS, SLAB DEPRESSIONS, STEPS, FLOOR DRAINS, SINKS, TRENCHES, UNDERFLOOR DUCTS AND CONDUITS. SEE ARCHITECTURAL, MECHANICAL, REFRIGERATION, AIR CONDITIONING, PLUMBING & ELECTRICAL DRAWINGS, TRENCH BACKFILL AS PER SOIL REPORT REQUIREMENTS.

7. BRIDGE CONTINUOUS FOOTING OVER TRENCH WITH 4 - #6 X16' -0" LONG BARS AT BOTTOM. CENTER BARS ON TRENCH. VERIFY ALL CONDITIONS IN FIELD.

8. ALL PLANTERS IN CLOSE PROXIMITY TO THE STRUCTURE SHALL HAVE ADEQUATE DRAINAGE OF SURFACE WATER TO PREVENT SATURATION OF SOIL UNDER FOUNDATION.

9. USE STEPPED FOOTING DETAIL, AS REQUIRED, SEE GRADING PLAN.

REINFORCED CONCRETE

1. ALL CONCRETE WORK SHALL CONFORM TO ALL REQUIREMENTS OF ACI 301-89 "SPECIFICATIONS FOR STRUCTURAL CONCRETE FOR BUILDINGS", EXCEPT AS MODIFIED BY THE SUPPLEMENTAL REQUIREMENTS CONTAINED HEREIN OR SHOWN ON THE DRAWINGS.
2. ALL CONCRETE SHALL BE 150 PCF HARDROCK, MIXED PER ASTM C 94, AND SHALL HAVE A MINIMUM COMPRESSIVE STRENGTH OF 3000 PSI AT 28 DAYS.
3. THE MAXIMUM SIZE AGGREGATE IN FOUNDATION AND MASS CONCRETE WORK SHALL BE 1 INCH. THE MAXIMUM SIZE AGGREGATE IN SLABS ON GRADE, WALLS AND ALL OTHER CONCRETE SHALL BE 3/4 INCH.
4. CEMENT SHALL CONFORM TO ASTM C150, TYPE II. AGGREGATES ASTM C33.
5. ADMIXTURES AND COLORS (EXCEPT AS NOTED HEREIN) SHALL NOT BE USED UNLESS SUBSTANTIATING DATA IS SUBMITTED TO AND ACCEPTED BY THE ENGINEER AND ARCHITECT OF RECORD.
6. ALL EXPOSED CONCRETE SHALL HAVE A SMOOTH FORM FINISH USING B-B PLYFORM, CLASS I, EXT-APA PLYWOOD.
7. ALL SLABS SHALL HAVE A TROWELED FINISH EXCEPT AS NOTED ON THE DRAWINGS.
8. ALL REINFORCING STEEL, ANCHOR BOLTS, DOWELS AND INSERTS SHALL BE WELL SECURED IN POSITION PRIOR TO PLACING CONCRETE.
9. REFER TO DETAILS ON DRAWINGS FOR MOLDS, ORNAMENTS, GROOVES, CLIPS, GROUNDS, ETC., TO BE CAST IN THE CONCRETE.
10. UNLESS OTHERWISE SHOWN IN DETAILS, FURNISH NO. 2 SPACER TIES AT APPROXIMATELY 2'-6" ON CENTER AND ANY ADDITIONAL TIES OR CHAIRS REQUIRED TO KEEP REINFORCING IN PLACE DURING CASTING OF THE CONCRETE.
11. IF THE CONTRACTOR DESIRES TO MAKE ANY CONSTRUCTION JOINTS OTHER THAN THOSE SHOWN ON THESE DRAWINGS, HE SHALL SUBMIT DETAILS OF CHANGES TO THE ENGINEER OF RECORD FOR REVIEW BEFORE STARTING WORK.
12. NO BRICK OR POROUS MATERIAL SHALL BE USED TO SUPPORT FOOTING STEEL OFF THE GROUND.
13. COVER FOR REINFORCING STEEL :

FOOTINGS :	INCHES
AGAINST EARTH (FORMED)	2
PLACED AGAINST EARTH	3
SLABS & JOINTS NOT EXPOSED TO WEATHER	3/4

14. ALL REINFORCING SHALL BE PLACED IN ACCORDANCE WITH THE RECOMMENDED PRACTICE FOR PLACING REINFORCING BARS (LATEST EDITION) OF THE CONCRETE REINFORCING STEEL INSTITUTE.
15. WELDED WIRE MESH SHALL CONFORM TO ASTM A185.
16. PROVIDE 3/4 INCH CHAMFER ON ALL EXPOSED CORNERS.
17. ADEQUATE BRACING AND SHORING SHALL BE INSTALLED AND MAINTAINED BY THE CONTRACTOR UNTIL PERMANENT CONNECTIONS TO THE STRUCTURE ARE EFFECTIVE.
18. SLEEVE PLUMBING OPENINGS IN SLABS BEFORE PLACING CONCRETE AND BEND REINFORCING AROUND SLEEVES.
19. CONCRETE CURING : TYPICALLY REQUIRED FOR 10 DAYS.

GENERAL NOTES

1. THE CONTRACTOR SHALL REVIEW EXISTING CONDITIONS ON THE SITE DURING THE BIDDING. THE CONTRACTOR SHALL VERIFY ALL DIMENSIONS PRIOR TO STARTING WORK AND THE ARCHITECT AND ENGINEER SHALL BE NOTIFIED OF ANY DISCREPANCIES OR INCONSISTENCIES PRIOR TO PROCEEDING.
2. UNLESS OTHERWISE SHOWN OR NOTED, ALL PHASES OF WORK ARE TO CONFORM TO THE MINIMUM STANDARDS OF THE UNIFORM BUILDING CODE (1994 EDITION UBC), RELATED UNIFORM BUILDING CODE STANDARDS (1994 EDITION), AND ANY ASTM SPECIFICATIONS WHICH THESE STANDARDS ARE BASED. WHERE CONFLICT BETWEEN BUILDING CODES AND SPECIFICATIONS OCCUR, THE MOST STRINGENT REQUIREMENTS SHALL GOVERN.
3. ALL ASTM DESIGNATIONS REFERRED TO ON THESE DRAWINGS SHALL BE THE LATEST ADOPTED OR REVISED SPECIFICATION, AS OF THE DATE OF THESE DRAWINGS.
4. ALL DIMENSIONS SHALL TAKE PRECEDENCE OVER SCALE SHOWN ON PLANS, SECTIONS AND DETAILS.
5. NOTES AND DETAILS ON DRAWINGS SHALL TAKE PRECEDENCE OVER GENERAL NOTES AND TYPICAL DETAILS.
6. SEE ARCHITECTURAL DRAWINGS FOR THE FOLLOWING :
A. SIZE AND LOCATION OF ALL OPENINGS.
B. SIZE AND LOCATION OF ALL NON-BEARING PARTITIONS.
C. SIZE AND LOCATION OF ALL CONCRETE CURBS, WALKS, ROOF AND FLOOR DRAINS, SLOPES, DEPRESSED SLAB AREAS, ETC.
D. FLOOR, ROOF AND WALL FINISHES.
7. THE CONTRACT STRUCTURAL DRAWINGS AND SPECIFICATIONS REPRESENT THE FINISHED STRUCTURE. UNLESS OTHERWISE INDICATED, THEY DO NOT INDICATE THE METHOD OF CONSTRUCTION. THE CONTRACTOR SHALL PROVIDE ALL MEASURES NECESSARY TO PROTECT LIFE AND THE STRUCTURE DURING CONSTRUCTION. SUCH MEASURES SHALL INCLUDE, BUT NOT BE LIMITED TO BRACING AND SHORING OF LOADS DUE TO CONSTRUCTION, EQUIPMENT, WIND, EARTHQUAKE, ETC. CONTRACTOR AT HIS OWN EXPENSE, SHALL ENGAGE PROPERLY QUALIFIED PERSONS TO DETERMINE WHERE AND HOW TEMPORARY PRECAUTIONARY MEASURES SHALL BE USED AND INSPECT SAME IN FIELD. CONTRACTOR SHALL CONFORM TO ALL SAFETY ORDINANCES, RULES AND CODES. OBSERVATION VISITS TO THE SITE BY THE STRUCTURAL ENGINEER SHALL NOT INCLUDE INSPECTION OF THE ABOVE SAFETY ITEMS.
8. SATISFACTORY EXECUTION OF CONSTRUCTION IS DEPENDENT UPON CONFORMANCE WITH THE INTENT OF THESE PLANS. OWNER OR CONTRACTOR SHALL RETAIN A CALIFORNIA LICENSED CIVIL OR STRUCTURAL ENGINEER DURING CONSTRUCTION TO OBSERVE THE CONSTRUCTION AND STATE THAT THE STRUCTURE HAS BEEN BUILT IN GENERAL CONFORMANCE WITH THE INTENT OF THESE DRAWINGS.
9. THIS FIRM DOES NOT PRACTICE OR CONSULT IN THE FIELD OF SAFETY ENGINEERING. WE DO NOT DIRECT THE CONTRACTOR'S OPERATIONS AND WE CANNOT BE RESPONSIBLE FOR THE SAFETY OF PERSONNEL OTHER THAN OUR OWN ON THE SITE. THE SAFETY OF OTHERS IS THE RESPONSIBILITY OF THE CONTRACTOR. THE CONTRACTOR SHOULD NOTIFY THE OWNER IF HE CONSIDERS ANY OF THE RECOMMENDED ACTIONS PRESENTED HEREIN TO BE UNSAFE.
10. CONSTRUCTION MATERIALS SHALL BE SPREAD OUT IF PLACED ON FRAMED FLOORS OR ROOF. LOAD SHALL NOT EXCEED DESIGN LIVE LOAD FOR EACH PARTICULAR LEVEL. WHEN WEIGHT OF MATERIALS OR EQUIPMENT MAY EXCEED DESIGN LOAD, STRUCTURAL SYSTEMS SHALL BE SHORED.
11. WHERE NO CONSTRUCTION DETAILS ARE SHOWN OR NOTED FOR ANY PART OF THE WORK, THE DETAILS SHALL BE THE SAME AS FOR OTHER SIMILAR WORK.

AS-BUILT
A. deBard
Contract No. BUS-443B
Date NOV. 2000

DESIGN LOADS

1. MINIMUM ROOF LOADS:
DEAD LOAD = 20 PSF
LIVE LOAD = 20 PSF
2. MINIMUM FLOOR LOADS:
DEAD LOAD = 50 PSF
LIVE LOAD = 50 PSF
3. MINIMUM WIND LOADS (EXP. C, WIND SPEED = 70MPH):
USE P = Ce*Cq*qs*Iw PER 1994 UBC
Iw = 1.15
4. SEISMIC LOADS (ZONE 4, NON-ESSENTIAL FACILITY):
I = 1.0
ZIC/Rw = 0.183
5. ROOF TRUSS LOADING:
TOP CHORD DEAD LOAD = 15.0 PSF
BOTTOM CHORD DEAD LOAD = 10.0 PSF
TOP CHORD LIVE LOAD = 20.0 PSF
NOTE: ADDITIONAL POINT LOADS DUE TO MECH/HVAC EQUIPMENT WEIGHT SHALL BE CONSIDERED AS ADDITIONAL DEAD LOAD. SEE PLANS FOR LOCATIONS.

DEFERRED APPROVAL

NO.	ITEM TO BE DEFERRED
1	PRE-ENGINEERED STEEL ROOF TRUSSES
2	PRE-ENGINEERED METAL STAIRS

1. SUBMITTAL DOCUMENTS FOR DEFERRED SUBMITTAL ITEMS SHALL BE SUBMITTED TO THE ARCHITECT OR ENGINEER OF RECORD, WHO SHALL REVIEW THEM AND FORWARD THEM TO THE BUILDING OFFICAL WITH A NOTATION INDICATING THAT THE DEFERRED SUBMITTAL DOCUMENTS HAVE BEEN REVIEWED AND THAT THEY HAVE BEEN FOUND TO BE IN GENERAL CONFORMANCE WITH THE DESIGN OF THE BUILDING. THE DEFERRED SUBMITTAL ITEMS SHALL NOT BE INSTALLED UNTIL THEIR DESIGN AND SUBMITTAL DOCUMENTS HAVE BEEN APPROVED BY THE BUILDING OFFICIAL.

METAL DECKING

1. ALL METAL DECK SHALL BE APPROVED BY THE ICBO AND/OR ALL GOVERNING AGENCIES.
2. FLOOR DECK:
A. STEEL FLOOR DECK AND ALL FLASHING SHALL BE FORMED FROM STEEL SHEETS CONFORMING TO ASTM A-446 GRADE A, BEFORE FORMING, THE STEEL SHEET SHALL BE COATED WITH ZINC COATING CONFORMING TO ASTM A-525 AND CLASS G-60 COATING AND TO FEDERAL SPECIFICATION QQ-S-775D TYPE I. CLASS E, (SEE PLANS FOR TYPE AND GAGE OF DECK).
B. FLOOR UNITS SHALL BE FORMED WITH INTEGRAL LOCKING LUGS OR EMBOSSMENTS TO PROVIDE A MECHANICAL LOCK BETWEEN THE STEEL, FLOOR AND THE CONCRETE SLAB.
C. STEEL FLOORS UNITS SHALL BE FASTENED TO THE STEEL FRAME WORK AT EVERY FLUTE, AND AT ALL SUPPORTS BY " DIA. PUDDLE WELDS, WHERE FLUTES ARE PARALLEL TO SUPPORTS, THE WELDS SHALL BE SPACED NOT MORE THAN 12" ACROSS THE WITH OF THE FLOOR UNIT. WHERE TWO UNITS LAP THEY SHALL BE BUTTON-PUNCHED AT 2'-0" INTERVALS OR SEAM WELDED AT 4'-0" O.C. MAXIMUM (MINIMUM TWO WELDS PER SPAN).
3. ROOF DECK:
A. ROOF DECK AND ACCESSORIES SHALL BE FORMED FROM STEEL SHEETS CONFORMING TO ASTM A-446 GRADE B OR BETTER U.N.O. ON PLANS. THE DECK SHALL BE GALVANIZED COATED IN ACCORDANCE WITH ASTM A-525 CLASS G-60 LIGHT COMMERCIAL.
B. WHERE VERMICULITE CONCRETE IS TO BE PLACED OVER THE TOP OF METAL DECK, IT SHALL BE COMPOSED OF ONE PART PORTLAND CEMENT TO SIX PARTS OF THE VERMICULITE AGGREGATE WITH SUFFICIENT WATER AND 0.56 PARTS OF AIR ENTRAINING AGENT PER SACK OF CEMENT. MINIMUM COMPRESSIVE STRENGTH = 140 PSI.
C. SEE PANS FOR TYPE, GAGE AND WELDING OF DECK, DECK MANUFACTURER TO PROVIDE AT LEAST 1.5% VENTILATION IN THE BOTTOM OF THE DECK FOR TYPE B DECK WHERE USED.
D. CONTINUOUS INSPECTION IS REQUIRED FOR ROOF DECK WELDING.
4. SCREED CONCRETE PARALLEL TO METAL DECKING TO THICKNESS INDICATED ON THE PLANS WHEN SHORING IS REQUIRED, SEE STANDARD DETAIL.
5. ALL METAL DECK GAGES SHOWN ON FLOOR AND ROOF PLANS ASSUME A CONTINUOUS DECK SPANNING OVER THREE APPROXIMATED EQUAL SPANS. THE CONTRACTOR SHALL PROVIDE HEAVIER GAGES WHERE THIS CONDITION IS NOT ATTAINED UNLESS ADEQUATE SHORING IS PROVIDED.

STRUCTURAL STEEL

1. FABRICATION AND ERECTION TO CONFORM TO AMERICAN INSTITUTE OF STEEL CONSTRUCTION LATEST EDITION "SPECIFICATION FOR THE DESIGN, FABRICATION AND ERECTION OF STRUCTURAL STEEL BUILDINGS" AND "CODE OF STANDARD PRACTICE FOR STEEL BUILDINGS AND BRIDGES" EXCEPT AS OTHERWISE SHOWN OR SPECIFIED.
2. QUALIFIED AND CERTIFIED WELDERS SHALL BE USED FOR ALL WELDING. WELDING TO BE PERFORMED IN THE SHOP OF A STATE LICENSED FABRICATOR. ALL WELDING TO CONFORM TO THE LATEST EDITION OF THE AMERICAN WELDING SOCIETY STRUCTURAL WELDING CODE AWS 1.1.
3. MATERIALS :

A.	STRUCTURAL STEEL SHAPES AND PLATES :	ASTM A 36
B.	STRUCTURAL STEEL PIPES :	ASTM A 53 GRADE B
C.	WELDING ELECTRODES :	AWS A 5.1 OR A 5.5
D.	NUTS AND BOLTS :	ASTM A 307
E.	GALVANIZING :	ASTM A 123
F.	RUST-INHIBITING PRIMER :	TT-P-645
G.	STEEL TUBING :	ASTM A500 GRADE B (fy = 46 ksi)

4. GALVANIZE AFTER FABRICATION ALL STRUCTURAL STEEL AND FASTENINGS EXPOSED TO WEATHER. TOUCH UP DAMAGED GALVANIZING WITH GALVALLOY AFTER ERECTION IS COMPLETE.
5. CONNECTED MEMBERS SHALL BEAR ONLY UPON UNTHREADED PORTION OF BOLTS.
6. BURNING OF HOLES IS NOT ALLOWED.
7. INSPECTION OF WELDING SHALL CONFORM TO UBC REQUIREMENTS (CHAPTER 17).

EPOXY ANCHORS

1. ADHESIVE ANCHORS SHALL CONSIST OF "ALL THREAD" OR DEFORMED REBAR WITH NUT, WASHER AND ADHESIVE.
2. THREADED ANCHOR RODS SHALL BE MANUFACTURED FROM:
SAE 1018 MEETING THE MECHANICAL REQUIREMENTS OF ASTM A307, GRADE A APPLICATION
3. REBAR SHALL BE GRADE 60 OR OTHER APPROVED MATERIAL. REBAR SHALL BE DEFORMED AND CAN BE COATED OR UNCOATED.
4. THE ADHESIVE SHALL BE A TWO COMPONENT, HIGH STRENGTH, LOW DEFLECTION CERAMIC FILLED EPOXY AS SUPPLIED BY ITW RAWSET/RED HEAD IDENTIFIED AS EPCON CERAMIC 6 (ICBO #4285), COVERT EPOXY (ICBO #4846), HILTI HIT C-100 (ICBO #4016) OR EQUAL.

INSTALLATION:
ADHESIVE ANCHORS SHALL BE INSTALLED IN HOLES DRILLED WITH CARBIDE BITS CONFORMING TO ANSI B94.12-1977. ANCHORS SHALL BE INSTALLED PER SPECIFICATIONS AND THE MANUFACTURERS PROCEDURES.

EXPANSION ANCHORS

1. EXPANSION ANCHORS SHALL BE HILTI KBII, (ICBO #4627).

REINFORCING STEEL

1. FABRICATION AND PLACEMENT SHALL CONFORM TO CRSI "MANUAL OF STANDARD PRACTICE" AND "CRSI RECOMMENDED PRACTICE FOR PLACING REINFORCING BARS".
2. REINFORCING STEEL SHALL BE INTERMEDIATE GRADE COMPLYING WITH ASTM A 615, GRADE 60. BEND BARS COLD.
3. REINFORCING STEEL IN CONCRETE SHALL LAP WHERE SPLICED 36 DIAMETERS BUT NOT LESS THAN 2'-0".
4. WALL STEEL IN CAST CONCRETE SHALL LAP AROUND CORNERS 36 DIAMETERS BUT NOT LESS THAN 2-0".
5. STAGGER ADJACENT SPLICE LOCATIONS AT LEAST 24 INCHES.
6. FOR FOOTINGS AND SLABS THE MINIMUM CLEAR DISTANCE BETWEEN PARALLEL BARS SHALL BE AT LEAST THE DIAMETER OF THE BAR, OR 1-1/3 TIMES THE AGGREGATE SIZE BUT IN NO CASE LESS THAN TWO INCHES.
7. REINFORCING TO BE WELDED SHALL BE ASTM A706.

CONCRETE BLOCK MASONRY

1. CONCRETE BLOCK UNITS SHALL BE GRADE N-I UNITS IN ACCORDANCE WITH ASTM SPECIFICATION C 90. f'm = 1800 psi.
2. ALL VERTICAL CELLS SHALL BE GROUTED SOLID IN LIFTS NOT EXCEEDING 8'-0" IN HEIGHT.
3. VERTICAL BARS IN MASONRY SHALL BE TIED OR OTHERWISE FIXED IN POSITION AT INTERVALS OF NOT LESS THAN 4'-0" AND AT TOP AND BOTTOM.
4. PROVIDE INSPECTION AND CLEANOUT HOLES AT BASE OF VERTICAL CELL GROUT LIFTS WHICH ARE MORE THAN 4'-0" IN HEIGHT.
5. WHEN GROUTING IS STOPPED FOR ONE HOUR OR LONGER HORIZONTAL CONSTRUCTION JOINTS SHALL BE FORMED BY STOPPING THE POUR OF GROUT 1-1/2" BELOW THE TOP OF THE UPPERMOST UNIT.
6. MORTAR SHALL BE TYPE S PER UNIFORM BUILDING CODE TABLE 21-A WITH A 28 DAYS COMPRESSIVE STRENGTH OF 1800 PSI.
7. REINFORCEMENT WELDING SHALL COMPLY WITH AWS D12.1-(LATEST EDITION).
8. ALL HEAD JOINTS SHALL BE FULL BUTTERED OR OPEN END UNITS SHALL BE USED.
9. CONCRETE BLOCK UNITS, GRADE N, GROUTED SOLID, OPEN END BLOCK.
10. GROUT SHALL BE A MIXTURE OF CEMENT, SAND PEA GRAVEL AND WATER WHICH WILL COMPLETELY FILL ALL VOIDS IN THE WALL AND DEVELOP A 28 DAY COMPRESSIVE STRENGTH OF 2000 psi (MINIMUM 6-1/2 SACKS OF CEMENT PER CUBIC YARD).
11. REINFORCING STEEL ASTM A 615, GRADE 60. SPLICE IN REINFORCEMENT SHALL BE LAPPED 40 DIAMETERS MIN.
12. ALL VERTICAL WALL REINFORCEMENT SHALL BE DOWELED TO THE FOUNDATION WITH THE SAME SIZE AND NUMBER OF BARS AS SHOWN IN THE WALLS.
13. PROVIDE ONE INCH MINIMUM GROUT COVER ON ALL BOLTS AND PLATES.
14. FIELD WELDING OF REINFORCING BARS U.O.N. ON PLANS.

CONSTRUCTION CHANGE TABLE

CHANGE	DATE	SHEET NUMBERS REVISED OR ADDED THIS CHANGE

SIMON WONG ENGINEERING
STRUCTURAL AND BRIDGE ENGINEERS
9968 Hibert Street, Suite 202
San Diego, CA 92131 (619) 566-3113

REGISTERED PROFESSIONAL ENGINEER
DONALD R. GRIS
No. S3838
EXP. 12-31-02
STRUCTURAL
STATE OF CALIFORNIA

DESIGNED BY	DRO	DATE 6/99
DRAWN BY	DPM	6/99
CHECKED BY	DRO	6/99
MTDB PRJ. ENG.		

MTDB
Metropolitan Transit Development Board
1255 Imperial Avenue, Suite 1000, San Diego, Ca. 92101-7490 (619)231-1466

IMPERIAL AVENUE DIVISION
BUS MAINTENANCE FACILITY

TYPICAL STRUCTURAL NOTES

SCALE NO SCALE
MTDB CONTRACT NO. BUS-443B
DRAWING NO. S10.1 SHEET NO. 44

SWE JOB No.204-02

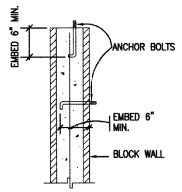

ANCHOR BOLT DETAIL (1)

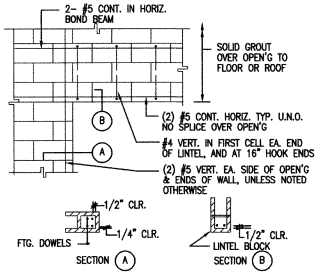

TYP. CMU LINTEL (2)

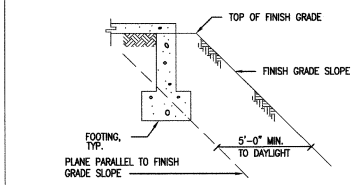

TYP. FTG-TO-SLOPE DETAIL (3)

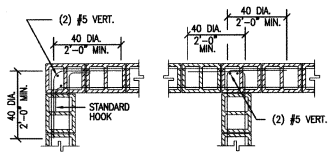

NOTE:
WHERE SINGLE LAYER OF REINFORCING OCCURS, BEND REINFORCEMENT AS SHOWN FOR OUTSIDE BARS.

REINF. AT CMU WALL INTERSECTIONS (4)

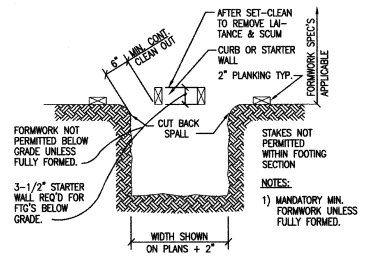

TRENCH AT CONTINUOUS FTG. (5)

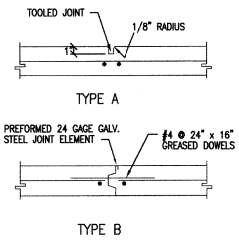

SLAB CONSTRUCTION/CONTROL JOINT (6)

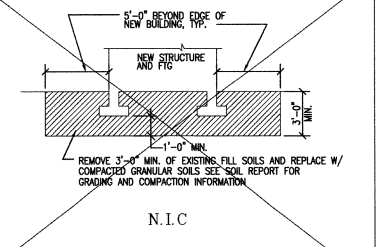

SOIL SITE PREPARATION (7)

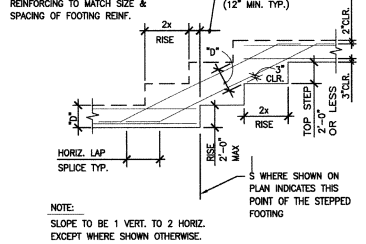

TYP. STEPPED WALL FOOTING (8)

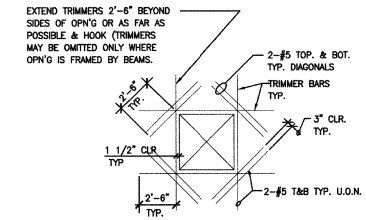

TYP. REINFORCING @ OPENING IN STRUCTURAL FLOOR SLAB (9)

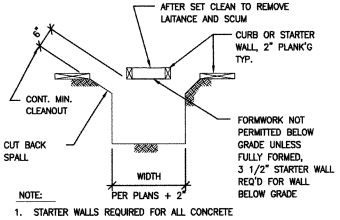

TYP. MIN. FORMWORK @ FOOTING PLACED AGAINST EARTH (10)

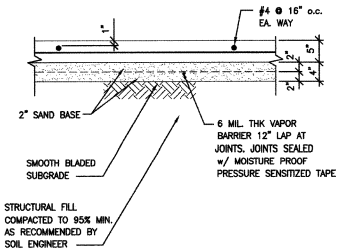

TYP. SLAB-ON-GRADE (11)

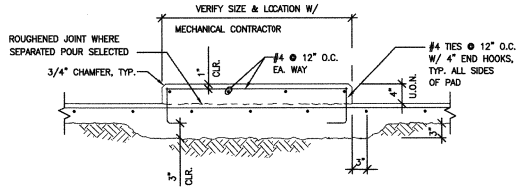

NOTES: 1. CONTRACTOR'S OPTION TO POUR PADS SEPARATELY FROM FLOOR SLAB AT PADS ON STRUCTURAL FLOOR.
2. EQUIPMENT ANCHORAGE EMBEDS ARE UNIQUE TO EACH PIECE OF EQUIPMENT, AND ARE NOT SHOWN IN DETAIL ABOVE.

PAD ON SLAB-ON-GRADE (12)

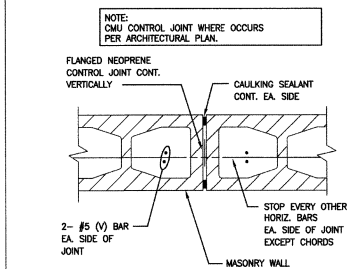

CMU CONTROL JOINT (13)

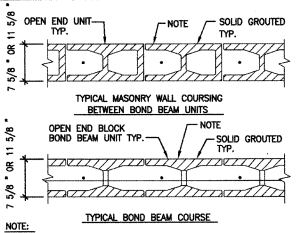

TYP. MASONRY COURSING (14)

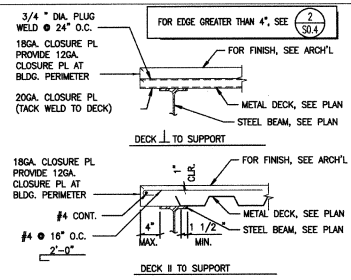

CLOSURE PLATE DETAILS (15)

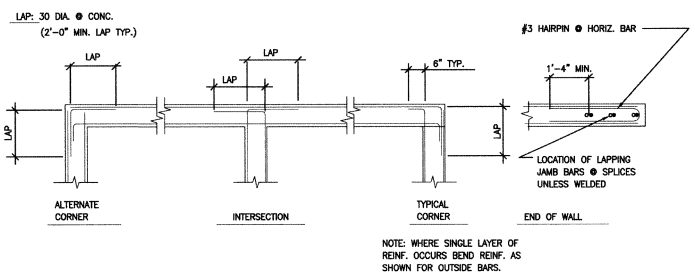

NOTE: WHERE SINGLE LAYER OF REINF. OCCURS BEND REINF. AS SHOWN FOR OUTSIDE BARS.

REINFORCING @ INTERSECTIONS OF BEAMS AND FOOTINGS AT CONCRETE WALLS (16)

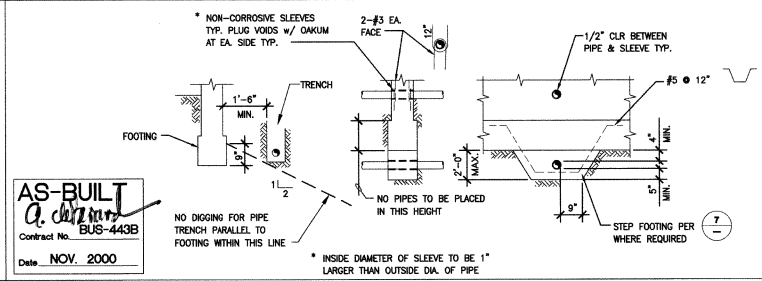

AS-BUILT
A. Contract No. BUS-443B
Date NOV. 2000

DETAIL OF PIPING @ FOOTING (17)

CONSTRUCTION CHANGE TABLE		
CHANGE	DATE	SHEET NUMBERS REVISED OR ADDED THIS CHANGE
1	5/24	ADDENDUM 1

SIMON WONG ENGINEERING
STRUCTURAL AND BRIDGE ENGINEERS
9968 Hibert Street, Suite 202
San Diego, CA 92131
(619) 566-3113

REGISTERED PROFESSIONAL ENGINEER — DONALD R. ORR — No. S3838 — EXP. 12-31-02 — STRUCTURAL — STATE OF CALIFORNIA

DESIGNED BY	DRO	6/99
DRAWN BY	DPM	6/99
CHECKED BY	DRO	6/99
MTDB PRJ. ENG.		

MTDB
Metropolitan Transit Development Board
1255 Imperial Avenue, Suite 1000, San Diego, Ca. 92101-7490 (619)231-1466

IMPERIAL AVENUE DIVISION
BUS MAINTENANCE FACILITY

TYPICAL STRUCTURAL DETAILS – 1

SCALE	NO SCALE
MTDB CONTRACT NO.	BUS-443B
DRAWING NO.	SHEET NO.
S10.2	45

SWE JOB No.204-02

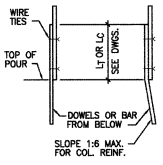

f_y = 60 KSI

BAR SIZE	TENSION LAP L (IN.) f'_c=3000	f'_c=4000	COMPRESSION LAP Lc (IN.)
#3	16	24	8
#4	21	24	11
#5	27	24	14
#6	32	28	16
#7	37	32	19
#8	45	39	22
#9	57	49	25
#10	72	63	28
#11	89	77	31

NOTES:
1. ALL VERTICAL REINFORCING FOR COLUMNS, PIERS AND WALLS SHALL BE DOWELED AS SHOWN UNLESS OTHERWISE NOTED ON DRAWINGS.
2. WHEN L_c OR L_t IS NOT SPECIFIED ON DRAWING, USE TENSION LAP L_t.

VERTICAL REINF. TENSION AND COMPRESSION LAP SPLICE (1)

HARDROCK CONCRETE fy 60,000 PSI (CLASS "B")

CMU: LAP 50d MIN., HORIZ. & VERT. REINF.

CONC. f'c PSI	BAR SIZE 3	4	5	6	7	8	9	10
	TENSION LAP SPLICES, INCHES							
3000	24	28	35	42	49	58	74	94
4000	24	24	30	36	42	51	64	81

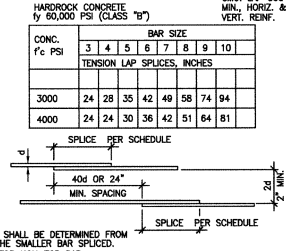

NOTES
1. SPLICE LENGTH SHALL BE DETERMINED FROM THE SIZE OF THE SMALLER BAR SPLICED.
2. DIVIDE BY 1.3 FOR NON-TOP BAR (LESS THAN 12" OF CONC. CAST BELOW)

HORIZONTAL REINF. LAP SPLICE (2)

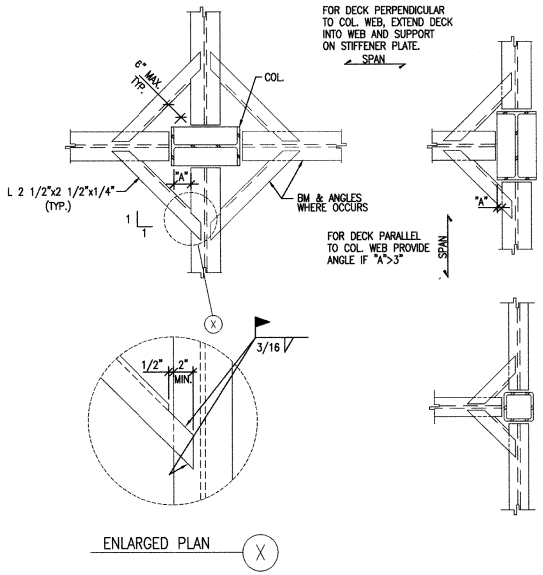

TYP. METAL DECK SUPPORT @ COLUMNS (5)

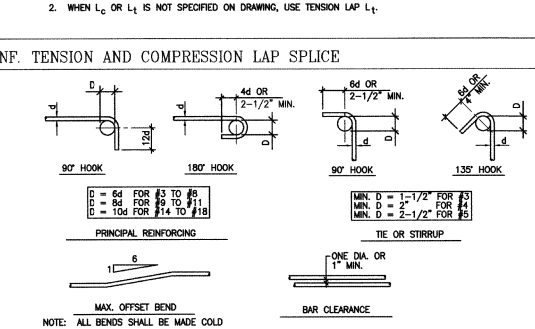

NOTE: ALL BENDS SHALL BE MADE COLD

BAR BENDS (3)

NOT USED (4)

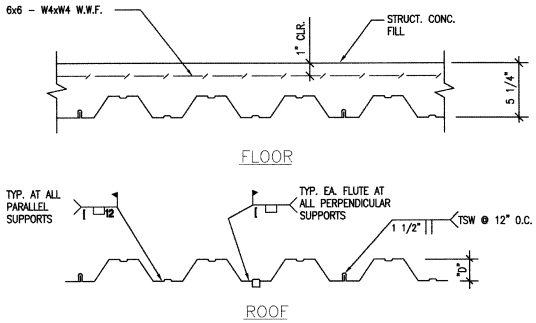

1. ALL 3/4"ϕ PLUG WELDS SHALL BE 1/2"ϕ EFFECTIVE.
2. PLUG WELDS MAY BE ELIMINATED WHERE THEY COINCIDE WITH SHEAR STUDS.
3. PERPENDICULAR DECK PENETRATIONS GREATER THAN 12" SHALL BE REINFORCED PER 7/S10.3

MINIMUM PROPERTIES							
LOCATION WHERE USED	DEPTH "D"	GA.	WEIGHT (P.S.F.)	I (IN^4)/FT.	+S (IN^3)/FT.	-S (IN^3)/FT.	REMARKS
ROOF	1 1/2"	18	2.8	0.302	0.322	0.335	
FLOORS	3"	20	2.3	0.896	0.534	0.564	

TYP. METAL FLOOR DECK PROPERTIES AND WELDS (6)

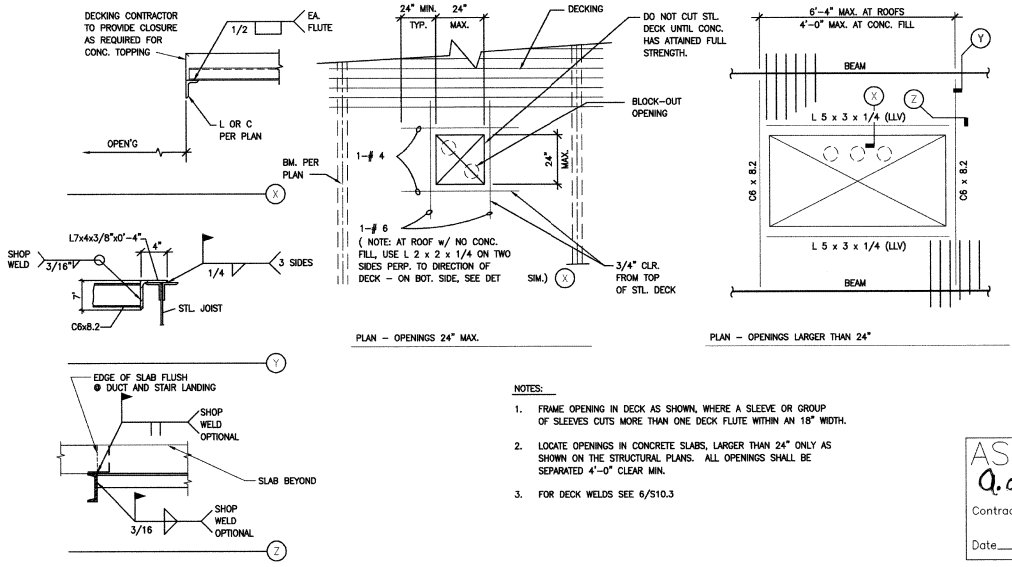

NOTES:
1. FRAME OPENING IN DECK AS SHOWN, WHERE A SLEEVE OR GROUP OF SLEEVES CUTS MORE THAN ONE DECK FLUTE WITHIN AN 18" WIDTH.
2. LOCATE OPENINGS IN CONCRETE SLABS, LARGER THAN 24" ONLY AS SHOWN ON THE STRUCTURAL PLANS. ALL OPENINGS SHALL BE SEPARATED 4'-0" CLEAR MIN.
3. FOR DECK WELDS SEE 6/S10.3

AS-BUILT
Contract No BUS-443B
Date NOV. 2000

TYP. FLOOR AND ROOF OPENINGS IN METAL DECK (7)

CONSTRUCTION CHANGE TABLE

CHANGE	DATE	SHEET NUMBERS REVISED OR ADDED THIS CHANGE

SIMON WONG ENGINEERING
STRUCTURAL AND BRIDGE ENGINEERS
9968 Hibert Street, Suite 202
San Diego, CA 92131
(619) 566-3113

REGISTERED PROFESSIONAL ENGINEER DONALD R. DRU No. S3838 EXP. 12-31-02 STRUCTURAL STATE OF CALIFORNIA

DESIGNED BY	DRO	6/99
DRAWN BY	DPM	6/99
CHECKED BY	DRO	6/99
MTDB PRJ. ENG.		

MTDB
Metropolitan Transit Development Board
1255 Imperial Avenue, Suite 1000, San Diego, Ca. 92101-7490 (619)231-1466

IMPERIAL AVENUE DIVISION
BUS MAINTENANCE FACILITY

TYPICAL STRUCTURAL DETAILS – 2

SCALE	NO SCALE
MTDB CONTRACT NO.	BUS-443B
DRAWING NO.	S10.3
SHEET NO.	46

SWE JOB No.204-02

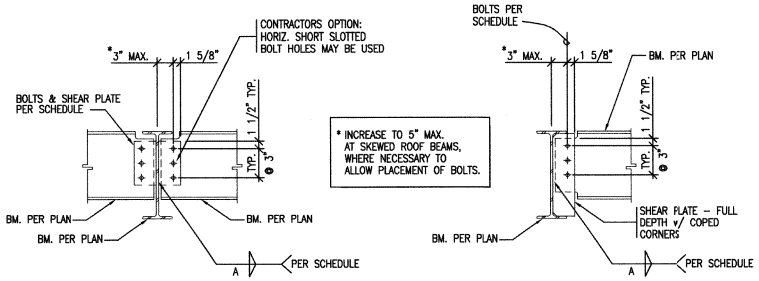

(A) BM. TO BM. CONN. (TWO SIDES)

(B) BM. TO BM. CONN. (ONE SIDE)

TYP. BOLT/SHEAR PLATE CONN. SCHEDULE

BEAM SIZE	SHEAR PLATE THICKNESS	BOLTS			WELD "A"	CAPACITY KIPS
		No.	DIA.	TYPE		
W8	1/4"	2	3/4"	A325N	1/4"	8.2
W10	1/4"	2	3/4"	A325N	1/4"	8.2
W12	1/4"	3	3/4"	A325N	1/4"	16.3
W14	1/4"	3	3/4"	A325N	1/4"	8.2
W16	1/4"	4	3/4"	A325N	1/4"	26.1
W18	5/16"	5	3/4"	A325N	1/4"	36.3
W21	5/16"	6	3/4"	A325N	1/4"	---
W24	3/8"	6	3/4"	A325N	1/4"	---

NOTES:
1. METAL DECK AND CONCRETE TOPPING OMITTED FOR CLARITY.
2. AT SMRF's DO NOT USE TYPE (A) CONNECTION ONLY.

USE FULL DEPTH SHEAR PLATE PLUS EXTENSION BELOW, NOTCH & WELD ALL AROUND TO BOTTOM FLANGE

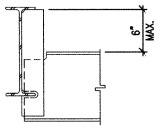

WHERE SPACE BELOW NOT ADEQUATE FOR BOLT, REPLACE SHEAR PLATE CONN. WITH DBL. ANGLE CONN. HAVING ONE LESS NO. OF ROWS.

DEPRESSED BEAM
(SIM. DEPTH)

SHEAR PLATE CONNECTION SCHEDULE (1)

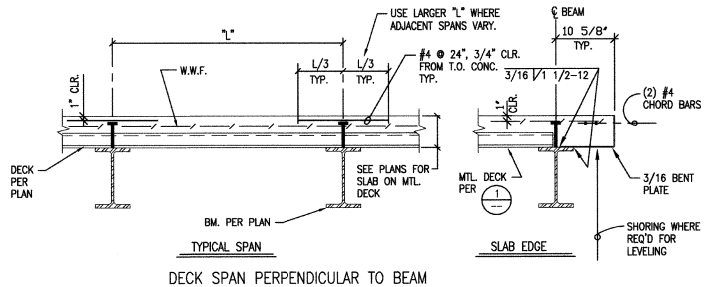

DECK SPAN PERPENDICULAR TO BEAM

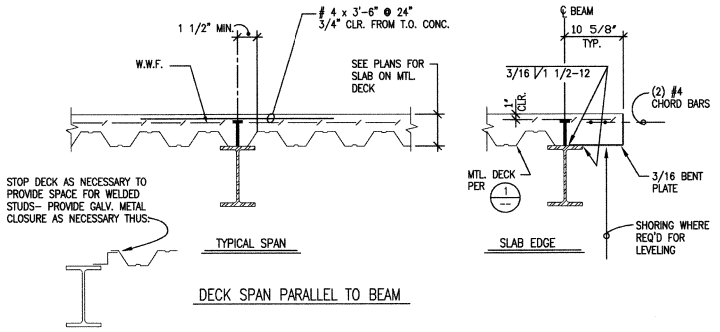

DECK SPAN PARALLEL TO BEAM

AS-BUILT
A. Dillard
Contract No. BUS-443B
Date NOV. 2000

TYPICAL SLAB REINFORCING WITH METAL DECKING (2)

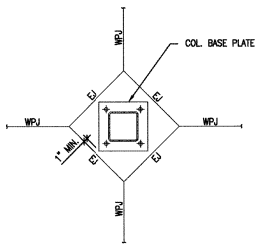

SLAB BLOCKOUT @ TS COL. BASE (3)

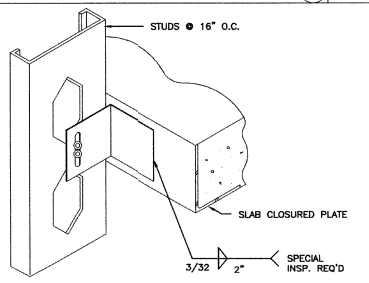

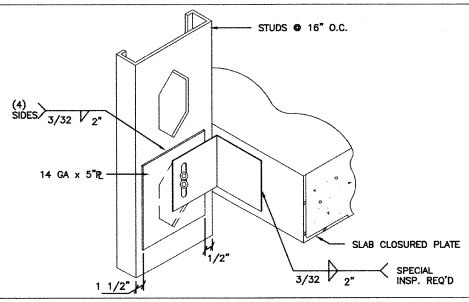

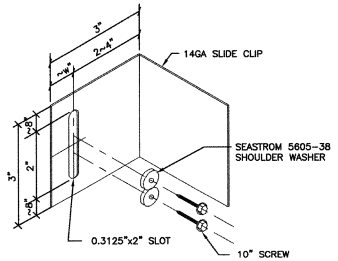

TYPICAL EXTERIOR METAL STUD TO DECK CONNECTION (4)

CONSTRUCTION CHANGE TABLE		
CHANGE	DATE	SHEET NUMBERS REVISED OR ADDED THIS CHANGE
1	11/3/99	ADDED W21/W24 DATA TO TABLE 1/S10.4

SIMON WONG ENGINEERING
STRUCTURAL AND BRIDGE ENGINEERS
9968 Hibert Street, Suite 202
San Diego, CA 92131
(619) 566-3113

REGISTERED PROFESSIONAL ENGINEER DONALD R. ORR No. S3838 EXP. 12-31-02 STRUCTURAL STATE OF CALIFORNIA

DESIGNED BY	DRO	6/99
DRAWN BY	DPM	6/99
CHECKED BY	DRO	6/99
MTDB PRJ. ENG.		

MTDB
Metropolitan Transit Development Board
1255 Imperial Avenue, Suite 1000, San Diego, Ca. 92101-7490 (619)231-1466

IMPERIAL AVENUE DIVISION
BUS MAINTENANCE FACILITY

TYPICAL STRUCTURAL DETAILS – 3

SCALE	
NO SCALE	
MTDB CONTRACT NO. BUS-443B	
DRAWING NO. S10.4	SHEET NO. 47

SWE JOB No.204-02

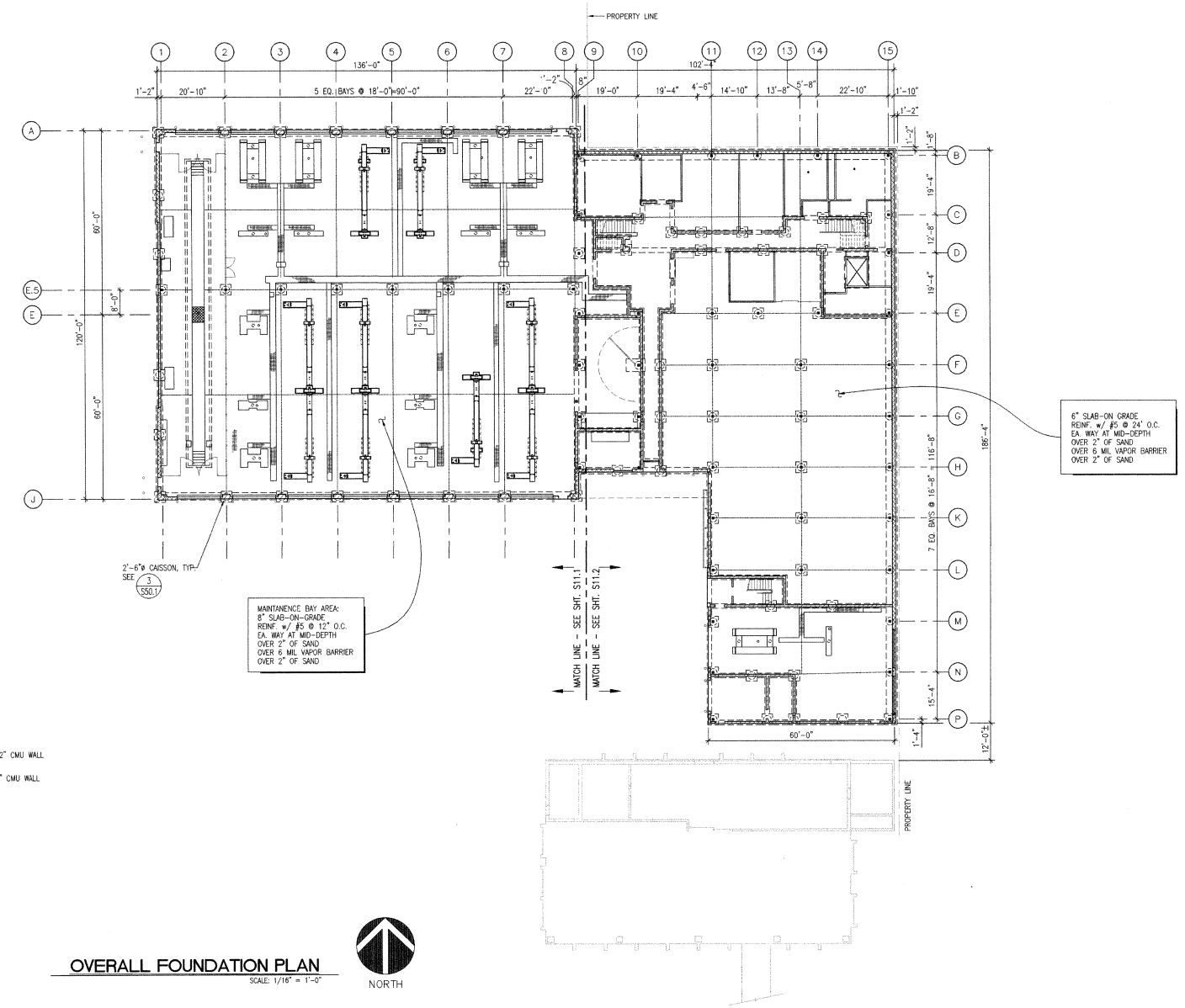

NOTES:
1. INDICATES 12" CMU WALL
2. INDICATES 8" CMU WALL

AS BUILT
Contract No.
Date Nov, 2000

OVERALL FOUNDATION PLAN

SCALE: 1/16" = 1'-0"

NORTH

KEY PLAN

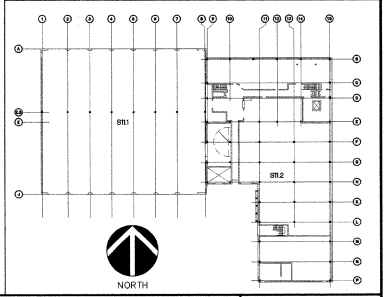

CONSTRUCTION CHANGE TABLE		
CHANGE	DATE	SHEET NUMBERS REVISED OR ADDED THIS CHANGE
JUL 01	1999	Conformed

SIMON WONG ENGINEERING
STRUCTURAL AND BRIDGE ENGINEERS
9968 Hibert Street, Suite 202
San Diego, CA 92131
(619) 566-3113

REGISTERED PROFESSIONAL ENGINEER
DONALD R. ORIE
No. S3868
EXP. 12-31-02
STRUCTURAL
STATE OF CALIFORNIA

	DATE
DESIGNED BY DRO	6/99
DRAWN BY DPM	6/99
CHECKED BY DRO	6/99
MTDB PRJ. ENG.	

MTDB
Metropolitan Transit Development Board
1255 Imperial Avenue, Suite 1000, San Diego, Ca. 92101-7490 (619)231-1466

IMPERIAL AVENUE DIVISION
BUS MAINTENANCE FACILITY

OVERALL FOUNDATION PLAN

SCALE 1/16" = 1'-0"
MTDB CONTRACT NO. BUS-443B
DRAWING NO. S11.0
SHEET NO. 48
SWE JOB No. 204-02

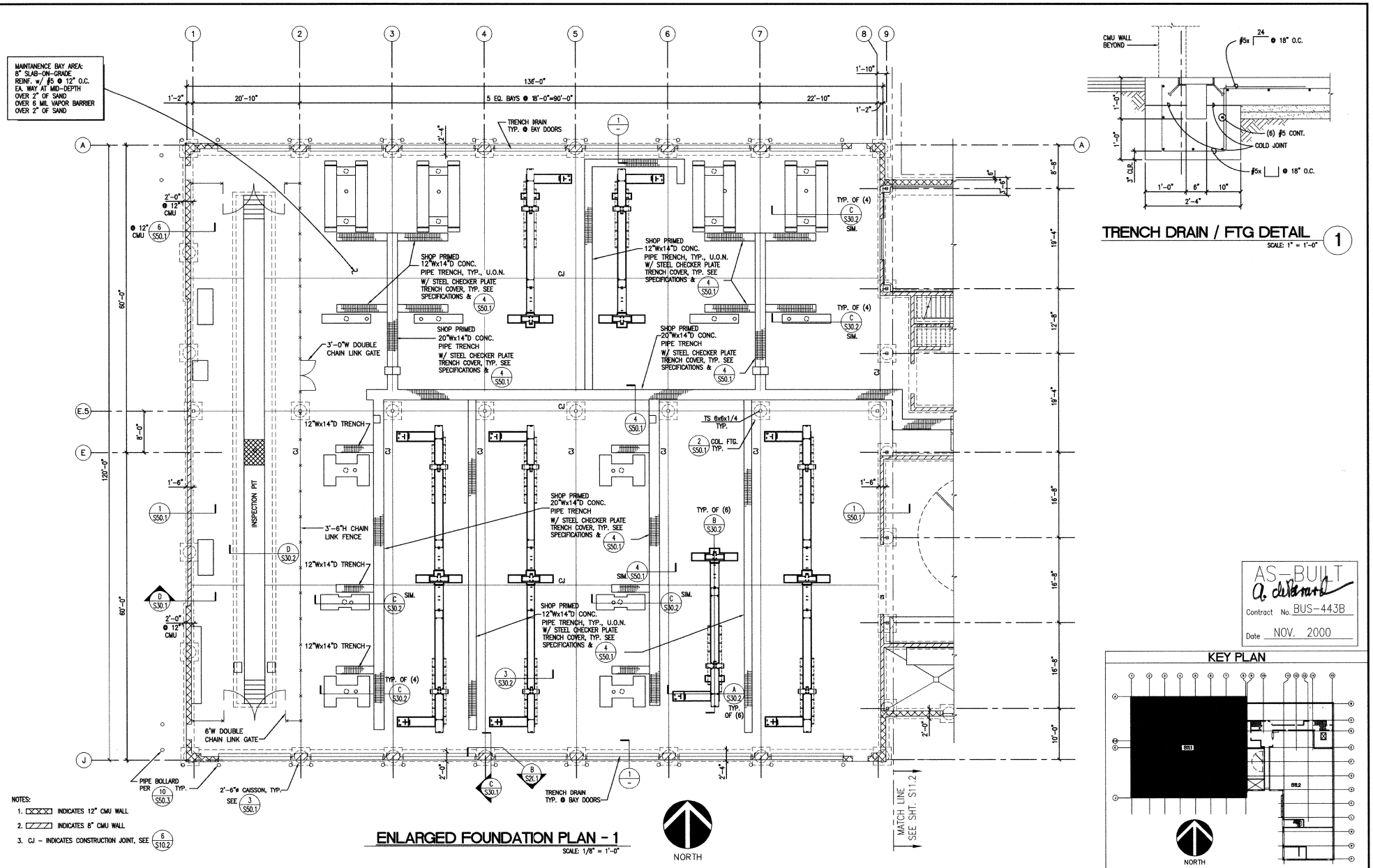

ENLARGED FOUNDATION PLAN - 1

SCALE: 1/8" = 1'-0"

TRENCH DRAIN / FTG DETAIL 1

SCALE: 1" = 1'-0"

AS-BUILT
A. deBernardi
Contract No. BUS-443B
Date NOV. 2000

KEY PLAN

CONSTRUCTION CHANGE TABLE		
CHANGE	DATE	SHEET NUMBERS REVISED OR ADDED THIS CHANGE
2	5/24	ADDENDUM 2

SIMON WONG ENGINEERING
STRUCTURAL AND BRIDGE ENGINEERS
9968 Hibert Street, Suite 202
San Diego, CA 92131
(619) 566-3113

REGISTERED PROFESSIONAL ENGINEER
DONALD R. GRIS
No. S3838
EXP. 12-31-02
STRUCTURAL
STATE OF CALIFORNIA

DESIGNED BY	DRO	6/99
DRAWN BY	DPM	6/99
CHECKED BY	DRO	6/99
MTDB PRJ. ENG.		

MTDB
Metropolitan Transit Development Board
1255 Imperial Avenue, Suite 1000, San Diego, Ca. 92101-7490 (619)231-1466

IMPERIAL AVENUE DIVISION
BUS MAINTENANCE FACILITY

ENLARGED FOUNDATION PLAN - 1

SCALE	1/8" = 1'-0"
MTDB CONTRACT NO.	BUS-443B
DRAWING NO.	S11.1
SHEET NO.	49

SWE JOB No.204-02

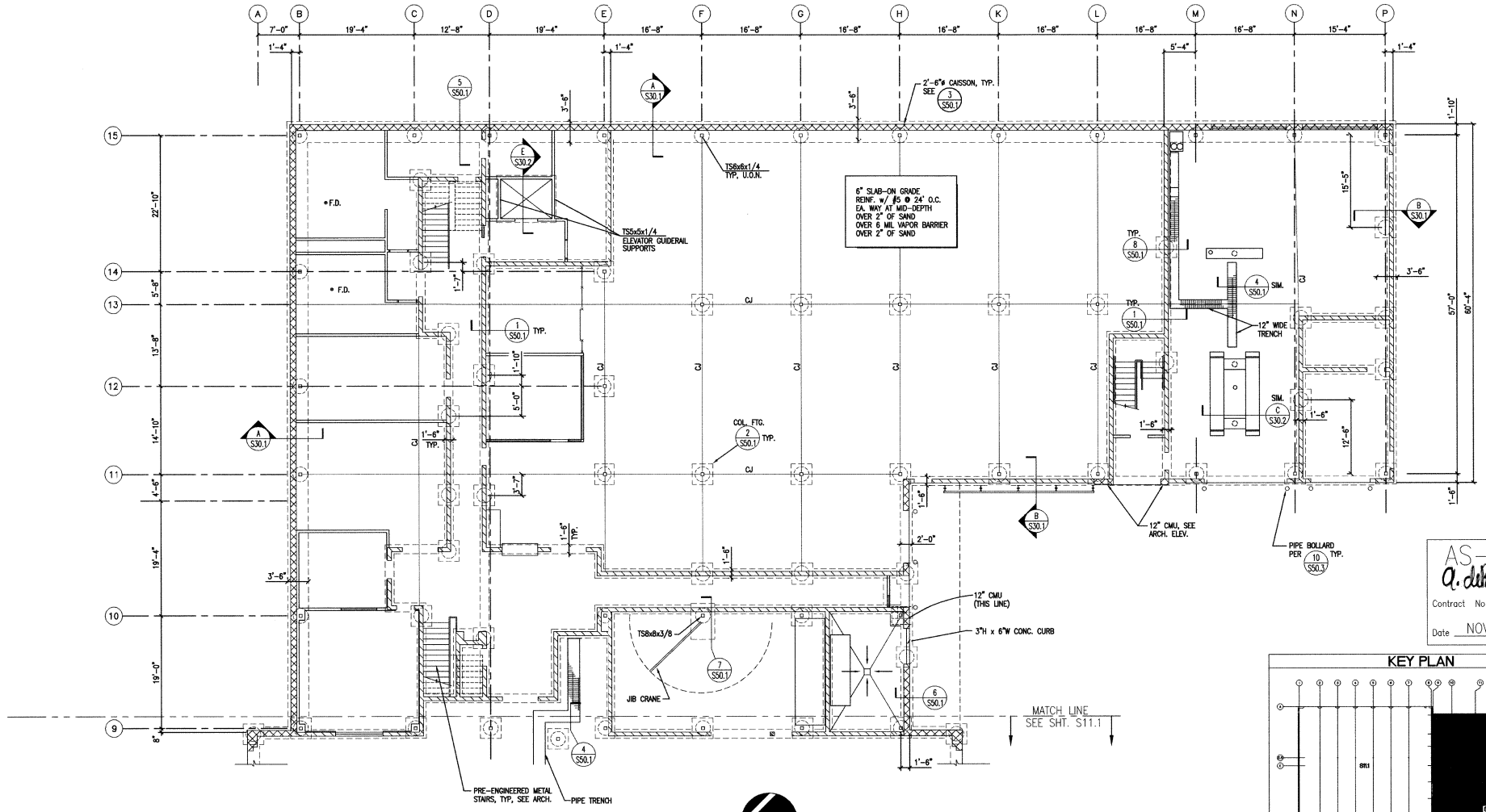

AS-BUILT
Contract No. BUS-443B
Date NOV. 2000

KEY PLAN

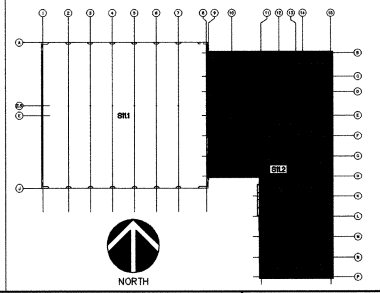

NOTES:
1. ⊠ INDICATES 12" CMU WALL
2. ▨ INDICATES 8" CMU WALL
3. CJ – INDICATES CONSTRUCTION JOINT, SEE 6 S10.2

ENLARGED FOUNDATION PLAN – 2

SCALE: 1/8" = 1'-0"

NORTH

CONSTRUCTION CHANGE TABLE		
CHANGE	DATE	SHEET NUMBERS REVISED OR ADDED THIS CHANGE

SIMON WONG ENGINEERING
STRUCTURAL AND BRIDGE ENGINEERS
9968 Hibert Street, Suite 202
San Diego, CA 92131
(619) 566-3113

REGISTERED PROFESSIONAL ENGINEER
DONALD R. ORTH
No. S3838
EXP. 12-31-02
STRUCTURAL
STATE OF CALIFORNIA

DESIGNED BY	DRO	6/99
DRAWN BY	DPM	6/99
CHECKED BY	DRO	6/99
MTDB PRJ. ENG.		

MTDB
Metropolitan Transit Development Board
1255 Imperial Avenue, Suite 1000, San Diego, Ca. 92101-7490 (619)231-1466

IMPERIAL AVENUE DIVISION
BUS MAINTENANCE FACILITY

ENLARGED FOUNDATION PLAN – 2

SCALE	1/8" = 1'-0"
MTDB CONTRACT NO.	BUS-443B
DRAWING NO.	SHEET NO.
S11.2	50

SWE JOB No.204-02

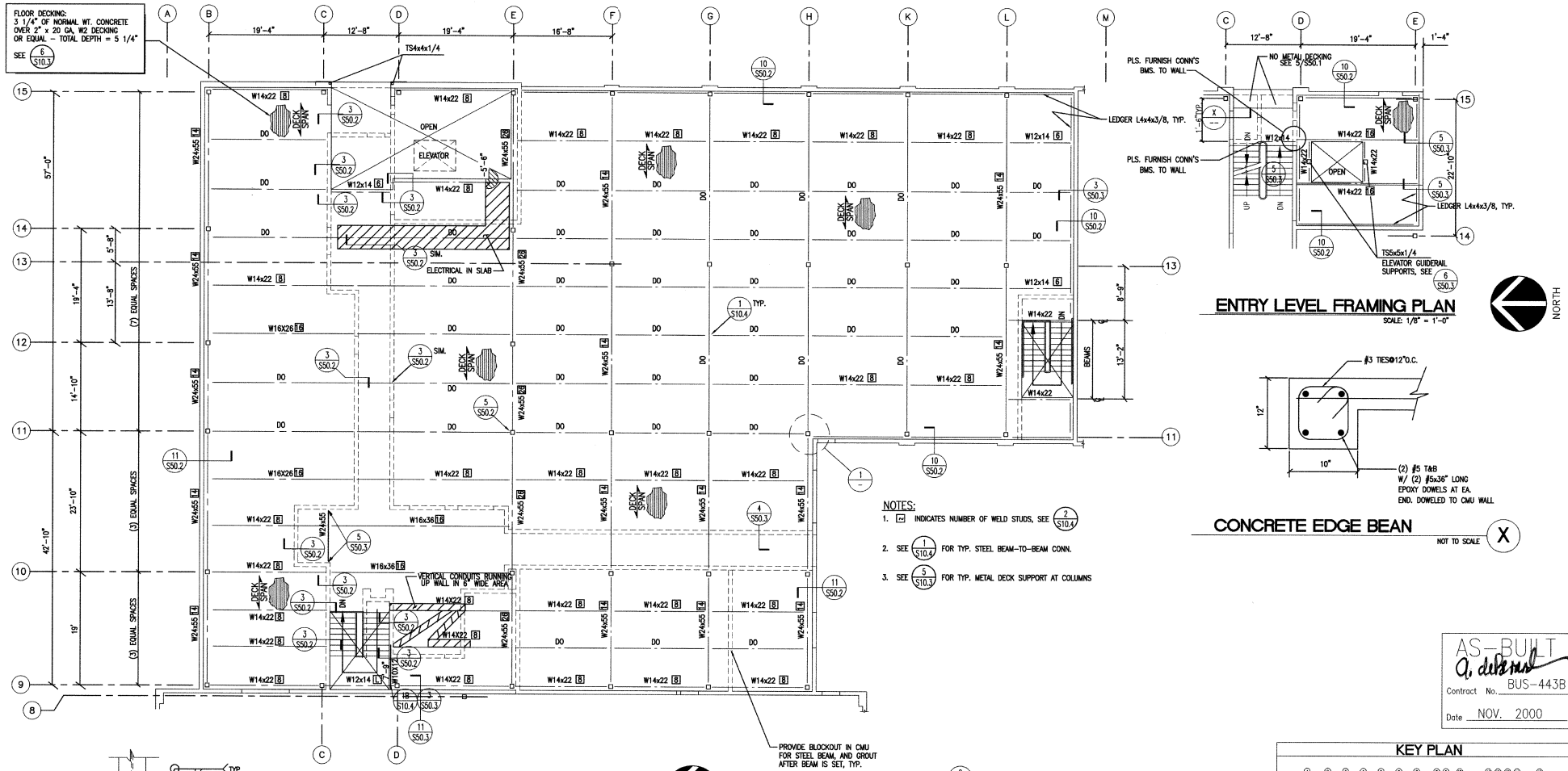

ENTRY LEVEL FRAMING PLAN
SCALE: 1/8" = 1'-0"

CONCRETE EDGE BEAN
NOT TO SCALE (X)

2ND LEVEL FRAMING PLAN
SCALE: 1/8" = 1'-0"

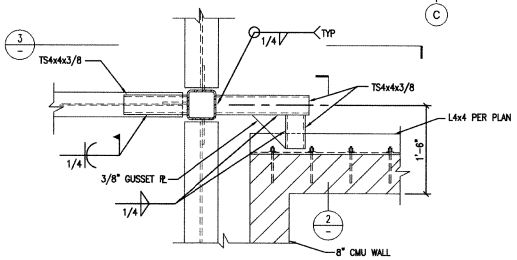

DRAG CONNECTION DETAIL (PLAN VIEW) 1
SCALE: 1" = 1'-0"

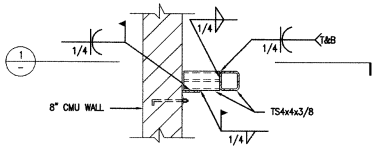

DRAG CONNECTION DETAIL 2
SCALE: 1" = 1'-0"

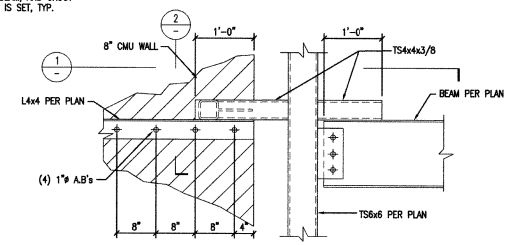

DRAG CONNECTION DETAIL (ELEV.) 3
SCALE: 1" = 1'-0"

KEY PLAN

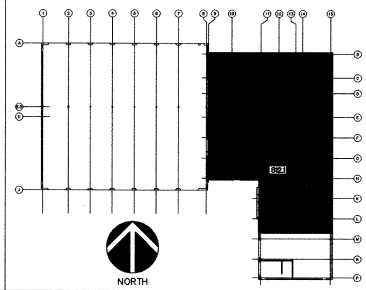

AS-BUILT
Contract No. BUS-443B
Date NOV. 2000

CONSTRUCTION CHANGE TABLE		
CHANGE	DATE	SHEET NUMBERS REVISED OR ADDED THIS CHANGE

SIMON WONG ENGINEERING
STRUCTURAL AND BRIDGE ENGINEERS
9968 Hibert Street, Suite 202
San Diego, CA 92131
(619) 566-3113

REGISTERED PROFESSIONAL ENGINEER RONALD R. ORIS No. S3838 EXP. 12-31-02 STRUCTURAL STATE OF CALIFORNIA

DESIGNED BY DRO	DATE 6/99
DRAWN BY DPM	6/99
CHECKED BY DRO	6/99
MTDB PRJ. ENG.	

MTDB
Metropolitan Transit Development Board
1255 Imperial Avenue, Suite 1000, San Diego, Ca. 92101-7490 (619)231-1466

IMPERIAL AVENUE DIVISION
BUS MAINTENANCE FACILITY

ENLARGED 2ND LEVEL FRAMING PLAN – 1

SCALE	
1/8" = 1'-0"	
MTDB CONTRACT NO. BUS-443B	
DRAWING NO. S12.1	SHEET NO. 51

SWE JOB No.204-02

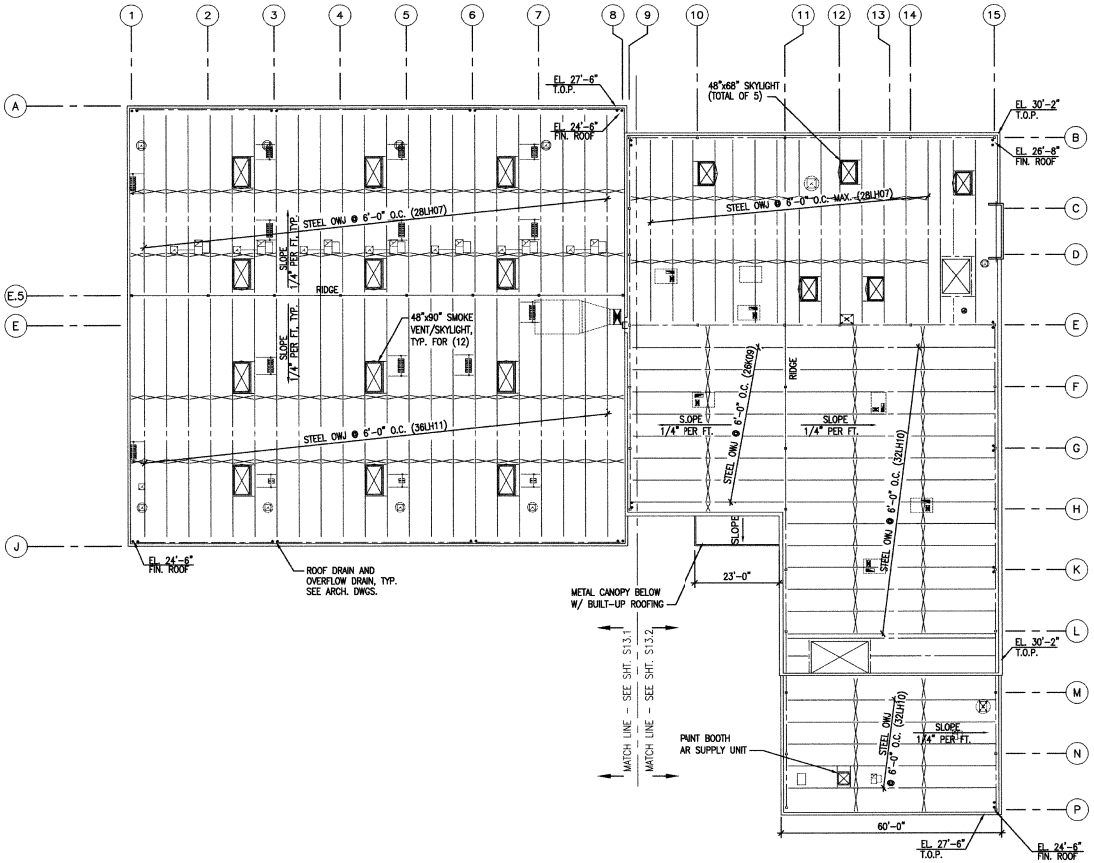

OVERALL ROOF FRAMING PLAN

SCALE: 1/16" = 1'-0"

NORTH

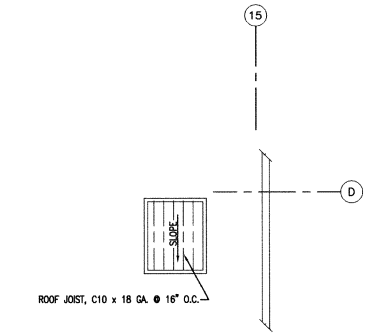

ELEVATOR SHAFT ROOF FRAMING PLAN

SCALE: 1/8" = 1'-0"

NORTH

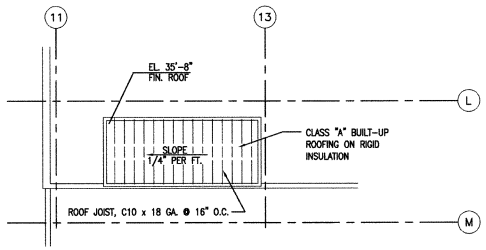

STAIR ROOF FRAMING PLAN

SCALE: 1/8" = 1'-0"

NORTH

AS-BUILT
Contract No. BUS-443B
Date NOV. 2000

NOTE:
1. ALL ROOF TRUSSES TO BE MANUFACTURED BY "VULCRAFT" OR APPROVED EQUAL. (32LH10) INDICATES TRUSS TYPE.

KEY PLAN

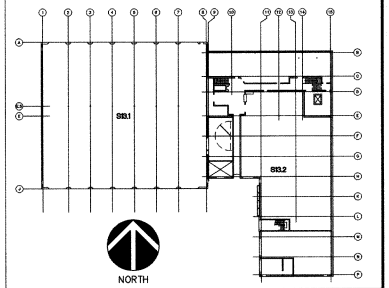

NORTH

CONSTRUCTION CHANGE TABLE		
CHANGE	DATE	SHEET NUMBERS REVISED OR ADDED THIS CHANGE

SIMON WONG ENGINEERING
STRUCTURAL AND BRIDGE ENGINEERS
9968 Hibert Street, Suite 202
San Diego, CA 92131
(619) 566-3113

REGISTERED PROFESSIONAL ENGINEER DONALD R. ORTH No. S3838 EXP. 12-31-02 STRUCTURAL STATE OF CALIFORNIA

DESIGNED BY	DRO	6/99
DRAWN BY	DPM	6/99
CHECKED BY	DRO	6/99
MTDB PRJ. ENG.		

MTDB
Metropolitan Transit Development Board
1255 Imperial Avenue, Suite 1000, San Diego, Ca. 92101-7490 (619)231-1466

IMPERIAL AVENUE DIVISION
BUS MAINTENANCE FACILITY

OVERALL ROOF FRAMING PLAN

SCALE	1/16" = 1'-0"
MTDB CONTRACT NO.	BUS-443B
DRAWING NO.	SHEET NO.
S13.0	52

SWE JOB No.204-02

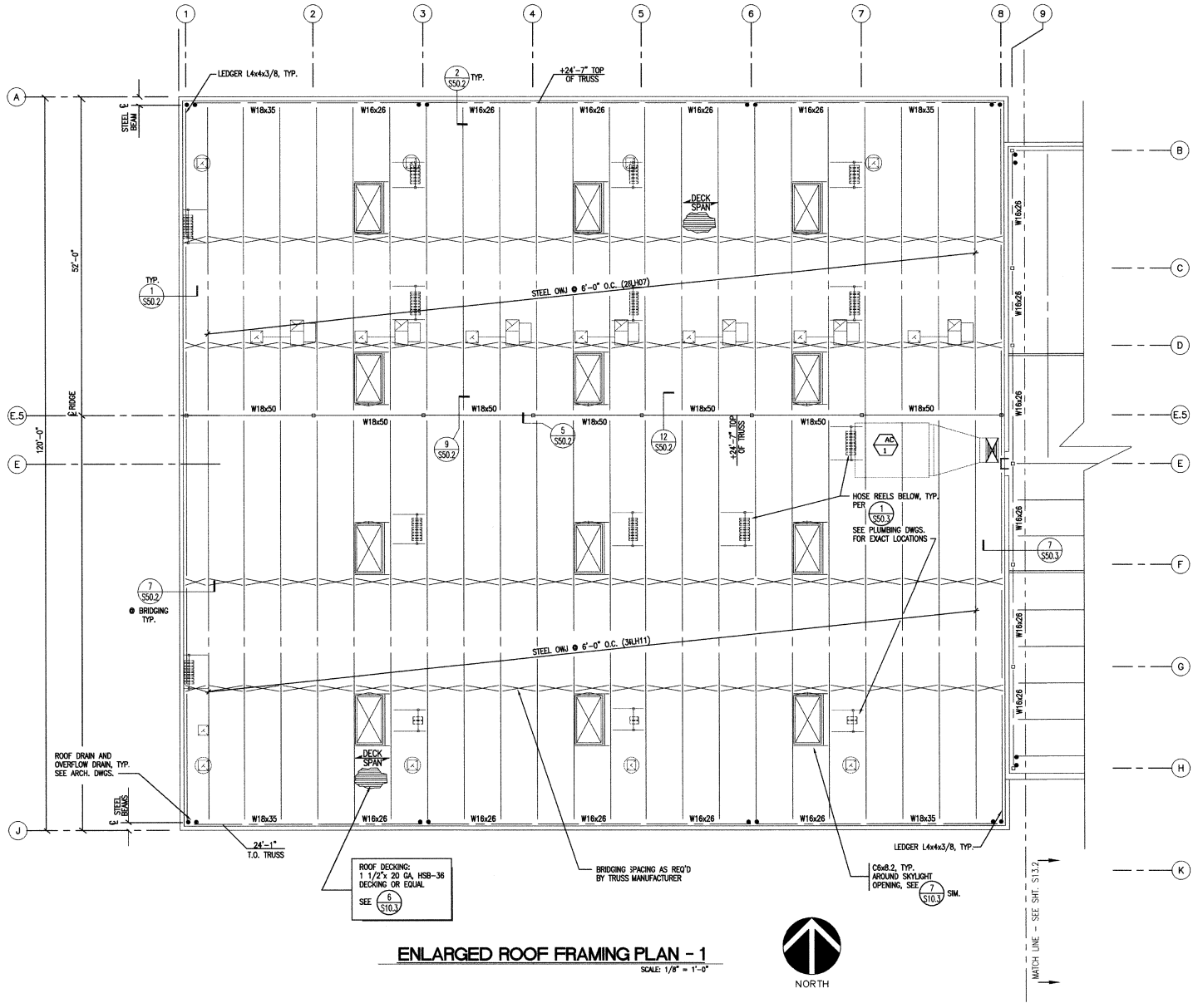

ENLARGED ROOF FRAMING PLAN - 1

SCALE: 1/8" = 1'-0"

NORTH

AS-BUILT
Contract No. BUS-443B
Date NOV. 2000

KEY PLAN

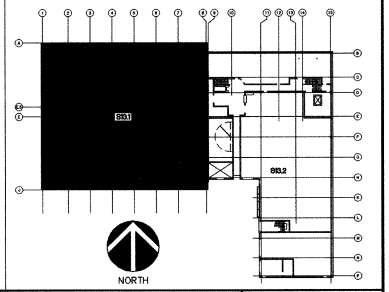

CONSTRUCTION CHANGE TABLE		
CHANGE	DATE	SHEET NUMBERS REVISED OR ADDED THIS CHANGE

SIMON WONG ENGINEERING
STRUCTURAL AND BRIDGE ENGINEERS
9968 Hibert Street, Suite 202
San Diego, CA 92131
(619) 566-3113

REGISTERED PROFESSIONAL ENGINEER
DONALD R. ORLE
No. S3838
EXP. 12-31-02
STRUCTURAL
STATE OF CALIFORNIA

DESIGNED BY	DRO	6/99
DRAWN BY	DPM	6/99
CHECKED BY	DRO	6/99
MTDB PRJ. ENG.		

MTDB
Metropolitan Transit Development Board
1255 Imperial Avenue, Suite 1000, San Diego, Ca. 92101-7490 (619)231-1466

IMPERIAL AVENUE DIVISION
BUS MAINTENANCE FACILITY

ENLARGED ROOF FRAMING PLAN - 1

SCALE	
1/8" = 1'-0"	
MTDB CONTRACT NO.	
BUS-443B	
DRAWING NO.	SHEET NO.
S13.1	53

SWE JOB No.204-02

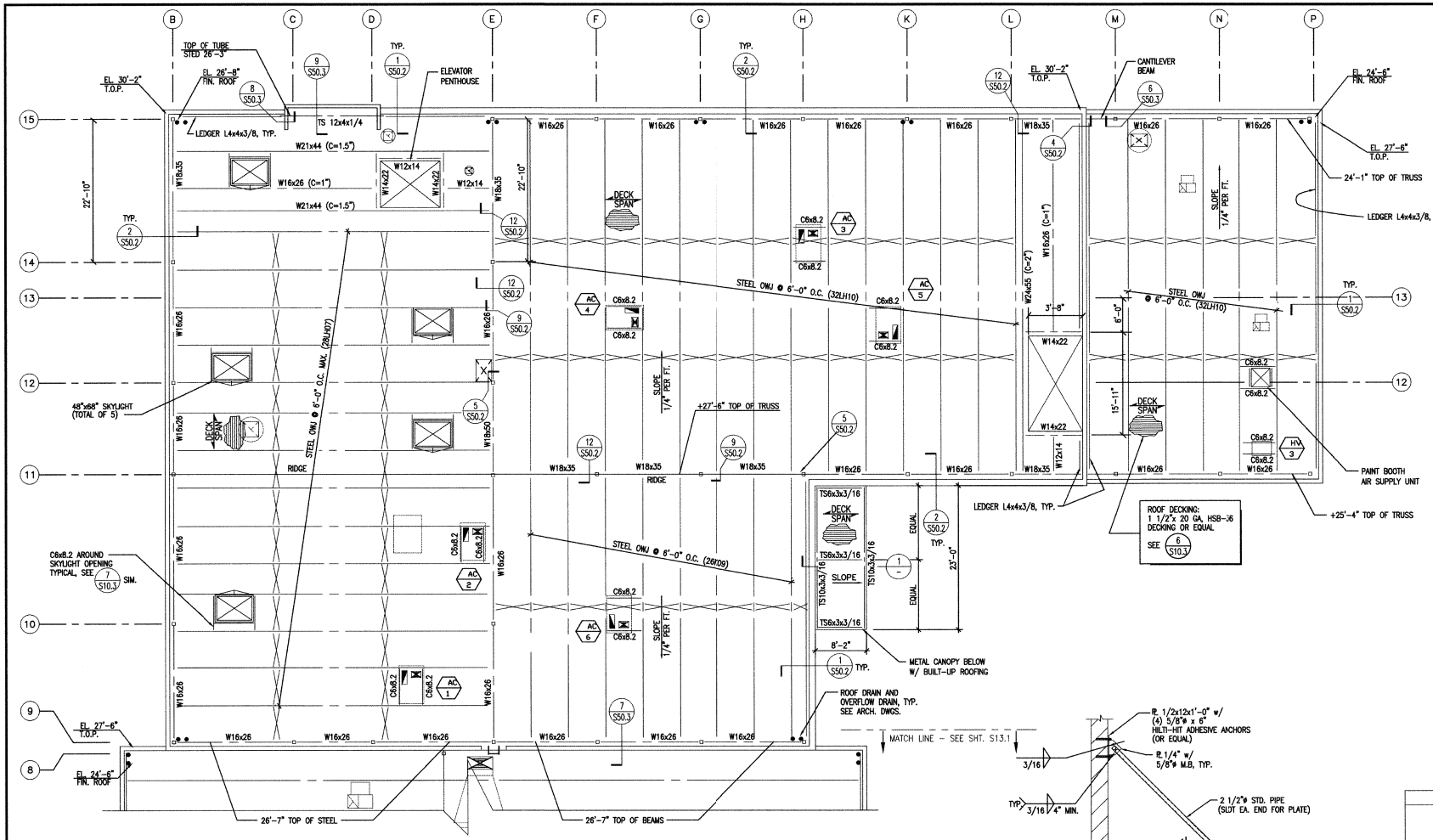

ENLARGED ROOF FRAMING PLAN - 2

SCALE: 1/8" = 1'-0"

NORTH

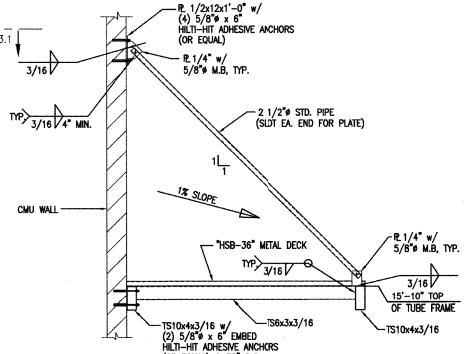

CANOPY SECTION 1

SCALE: 1/2" = 1'-0"

AS-BUILT
Contract No. BUS-443B
Date NOV. 2000

KEY PLAN

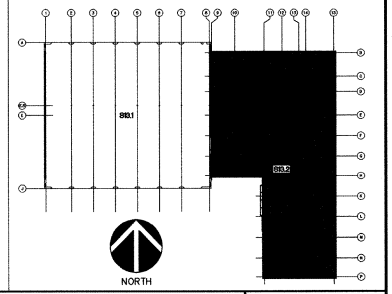

NORTH

CONSTRUCTION CHANGE TABLE		
CHANGE	DATE	SHEET NUMBERS REVISED OR ADDED THIS CHANGE

SIMON WONG ENGINEERING
STRUCTURAL AND BRIDGE ENGINEERS
9968 Hilbert Street, Suite 202
San Diego, CA 92131
(619) 566-3113

REGISTERED PROFESSIONAL ENGINEER DONALD R. ORLE No. S3838 EXP. 12-31-02 STRUCTURAL STATE OF CALIFORNIA

DESIGNED BY	DRO	6/99
DRAWN BY	DPM	6/99
CHECKED BY	DRO	6/99
MTDB PRJ. ENG.		

MTDB
Metropolitan Transit Development Board
1255 Imperial Avenue, Suite 1000, San Diego, Ca. 92101-7490 (619)231-1466

IMPERIAL AVENUE DIVISION
BUS MAINTENANCE FACILITY

ENLARGED ROOF FRAMING PLAN - 2

SCALE	1/8" = 1'-0"
MTDB CONTRACT NO.	BUS-443B
DRAWING NO.	S13.2
SHEET NO.	54

SWE JOB No.204-02

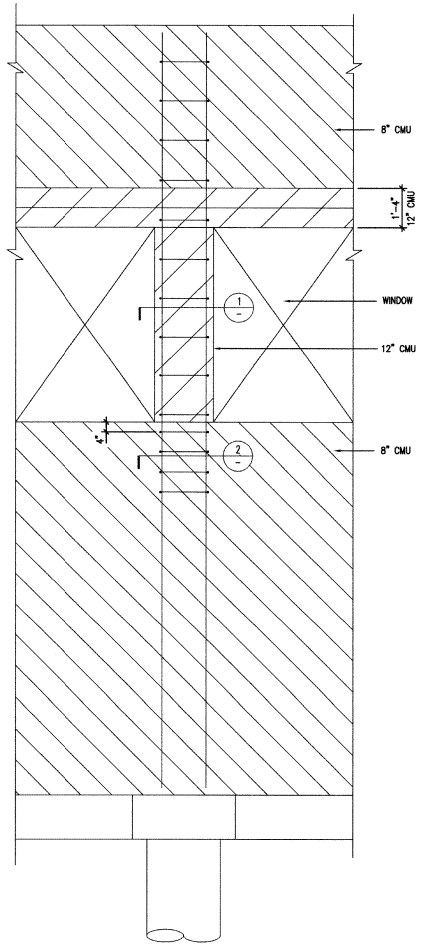

PARTIAL WALL ELEVATION A
SCALE: 1/2" = 1'-0"

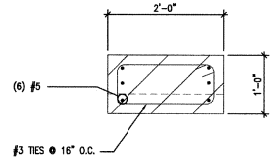

DETAIL 1
SCALE: 1" = 1'-0"

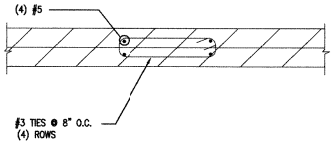

DETAIL 2
SCALE: 1" = 1'-0"

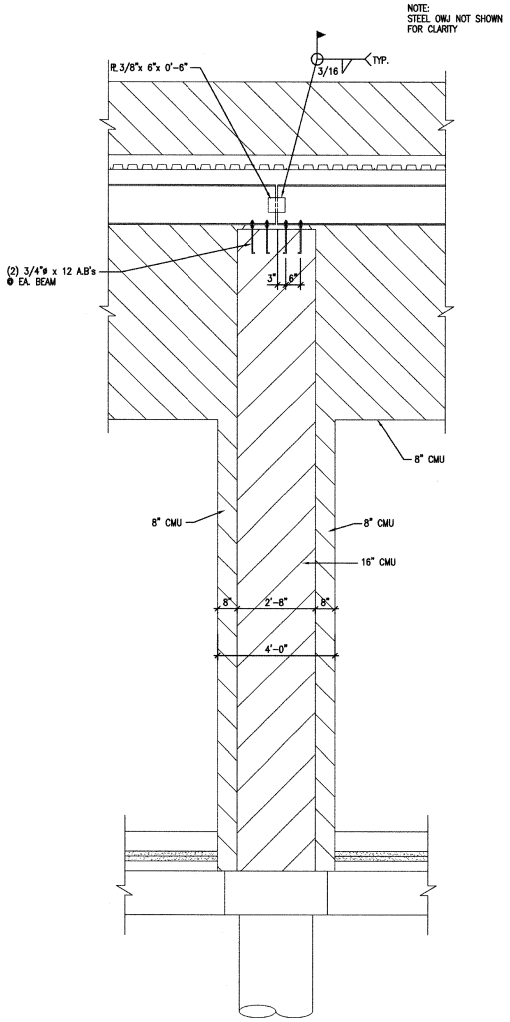

PARTIAL WALL ELEVATION B
SCALE: 1/2" = 1'-0"

AS-BUILT
Contract No. BUS-443B
Date NOV. 2000

CONSTRUCTION CHANGE TABLE		
CHANGE	DATE	SHEET NUMBERS REVISED OR ADDED THIS CHANGE

SIMON WONG ENGINEERING
STRUCTURAL AND BRIDGE ENGINEERS
9968 Hibert Street, Suite 202
San Diego, CA 92131
(619) 566-3113

REGISTERED PROFESSIONAL ENGINEER
RONALD R. GIES
No. S3838
EXP. 12-31-02
STRUCTURAL
STATE OF CALIFORNIA

DESIGNED BY	DRO	DATE 6/99
DRAWN BY	DPM	6/99
CHECKED BY	DRO	6/99
MTDB PRJ. ENG.		

MTDB
Metropolitan Transit Development Board
1255 Imperial Avenue, Suite 1000, San Diego, Ca. 92101-7490 (619)231-1466

IMPERIAL AVENUE DIVISION
BUS MAINTENANCE FACILITY

STRUCTURAL ELEVATIONS – 1

SCALE 1/2" = 1'-0"
MTDB CONTRACT NO. BUS-443B
DRAWING NO. S20.1
SHEET NO. 55
SWE JOB No.204-02

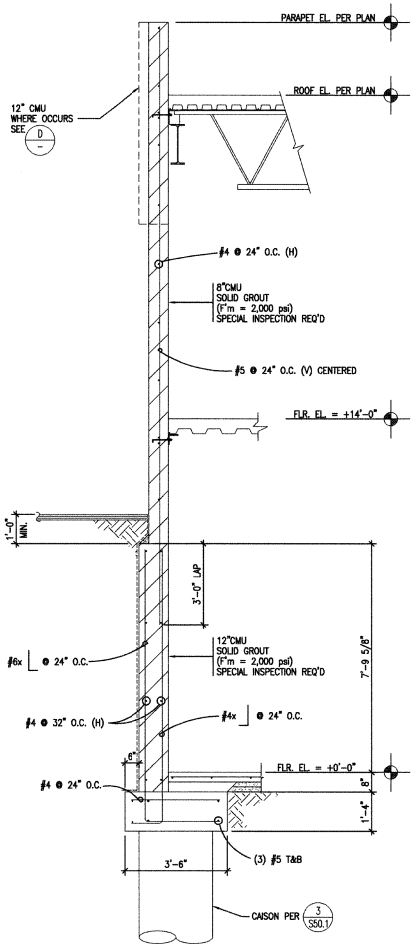

WALL SECTION A
SCALE: 1/2" = 1'-0"

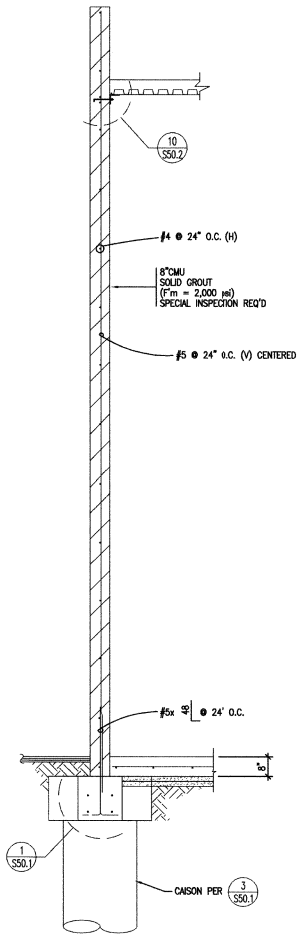

WALL SECTION B
SCALE: 1/2" = 1'-0"

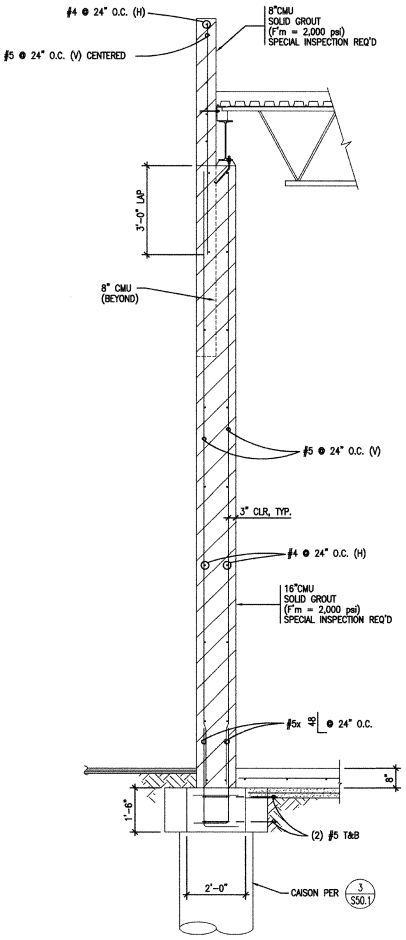

WALL SECTION C
SCALE: 1/2" = 1'-0"

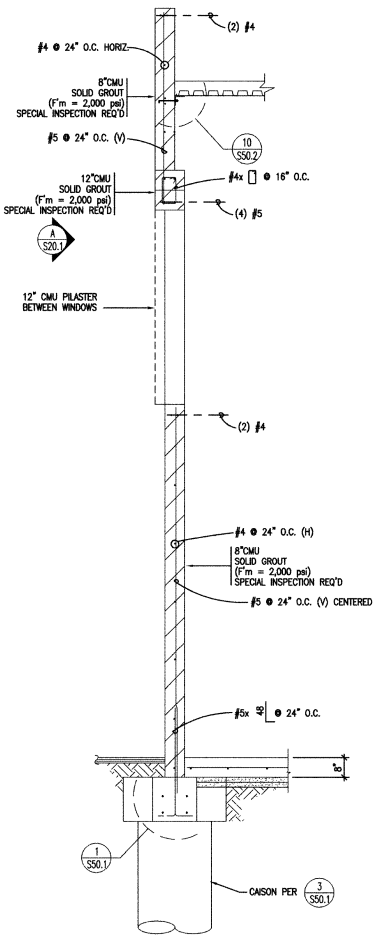

WALL SECTION D
SCALE: 1/2" = 1'-0"

AS-BUILT
Q. deBrant
Contract No. BUS-443B
Date NOV. 2000

CONSTRUCTION CHANGE TABLE		
CHANGE	DATE	SHEET NUMBERS REVISED OR ADDED THIS CHANGE

SIMON WONG ENGINEERING
STRUCTURAL AND BRIDGE ENGINEERS
9968 Hibert Street, Suite 202
San Diego, CA 92131
(619) 566-3113

REGISTERED PROFESSIONAL ENGINEER RONALD R. DELK No. S3838 EXP. 12-31-02 STRUCTURAL STATE OF CALIFORNIA

DESIGNED BY	DRO	6/99
DRAWN BY	DPM	6/99
CHECKED BY	DRO	6/99
MTDB PRJ. ENG.		

MTDB
Metropolitan Transit Development Board
1255 Imperial Avenue, Suite 1000, San Diego, Ca. 92101-7490 (619)231-1466

IMPERIAL AVENUE DIVISION
BUS MAINTENANCE FACILITY

STRUCTURAL SECTIONS – 1

SCALE	1/2" = 1'-0"
MTDB CONTRACT NO.	BUS-443B
DRAWING NO.	S30.1
SHEET NO.	56

SWE JOB No.204-02

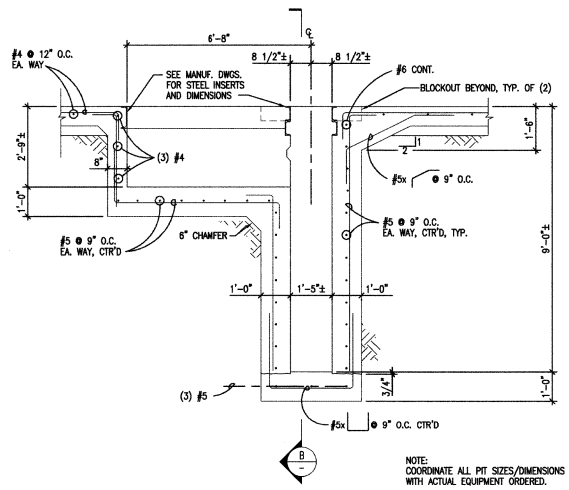

SECTION • PIT A

SCALE: 1/2" = 1'-0"

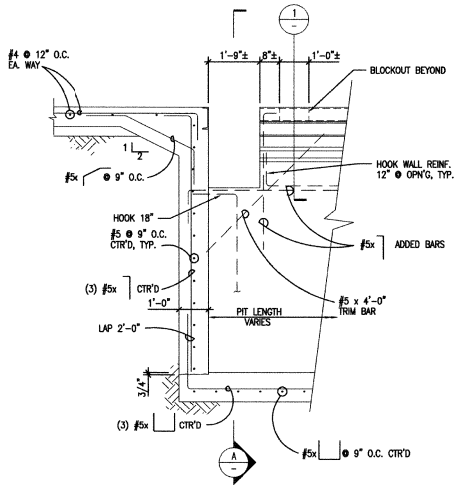

SECTION • PIT B

SCALE: 1/2" = 1'-0"

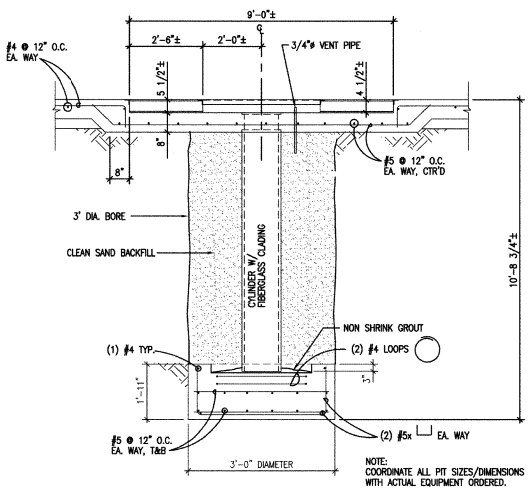

SECTION • PIT C

SCALE: 1/2" = 1'-0"

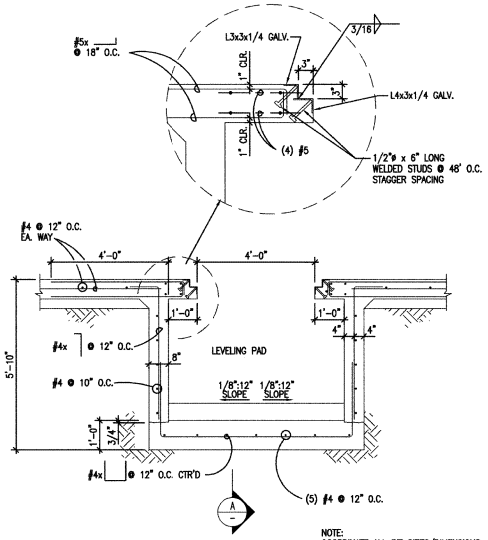

SECTION • PIT D

SCALE: 1/2" = 1'-0"

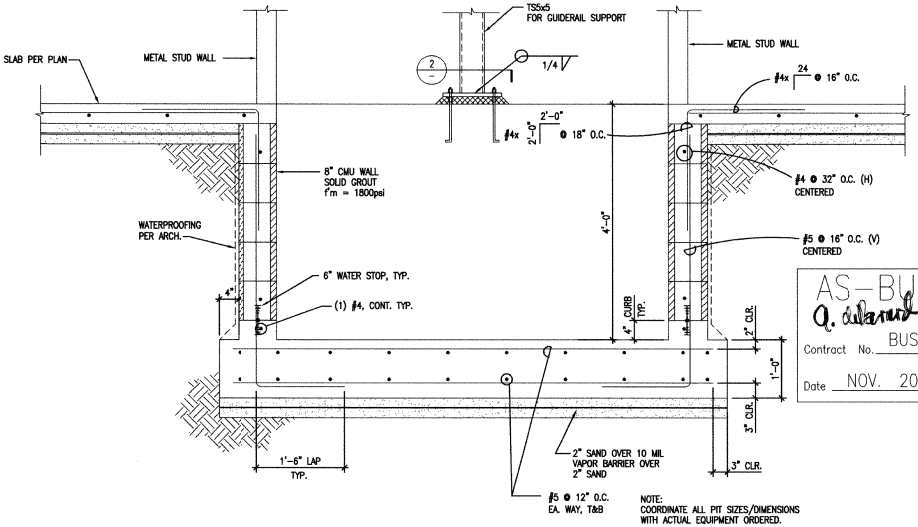

ELEVATOR PIT E

SCALE: 1" = 1'-0"

AS-BUILT
Q. Edwards
Contract No. BUS-443B
Date NOV. 2000

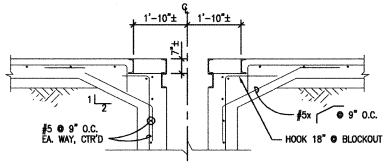

DETAIL • BLOCKOUT 1

SCALE: 1/2" = 1'-0"

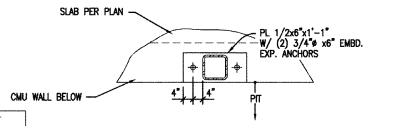

DETAIL • TS COLUMN 2

SCALE: 1/2" = 1'-0"

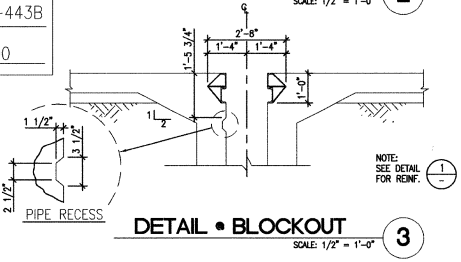

DETAIL • BLOCKOUT 3

SCALE: 1/2" = 1'-0"

CONSTRUCTION CHANGE TABLE		
CHANGE	DATE	SHEET NUMBERS REVISED OR ADDED THIS CHANGE

SIMON WONG ENGINEERING
STRUCTURAL AND BRIDGE ENGINEERS
9968 Hibert Street, Suite 202
San Diego, CA 92131 (619) 566-3113

REGISTERED PROFESSIONAL ENGINEER DONALD R. GRAY No. S3838 EXP. 12-31-02 STRUCTURAL STATE OF CALIFORNIA

DESIGNED BY	DRO	6/99
DRAWN BY	DPM	6/99
CHECKED BY	DRO	6/99
MTDB PRJ. ENG.		

MTDB
Metropolitan Transit Development Board
1255 Imperial Avenue, Suite 1000, San Diego, Ca. 92101-7490 (619)231-1466

IMPERIAL AVENUE DIVISION
BUS MAINTENANCE FACILITY

STRUCTURAL SECTIONS – 2

SCALE	1/2" = 1'-0"
MTDB CONTRACT NO.	BUS-443B
DRAWING NO.	S30.2
SHEET NO.	57

SWE JOB No.204-02

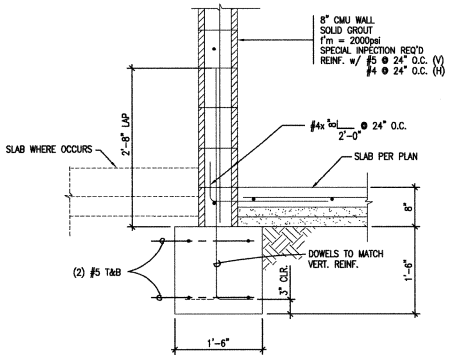

FOOTING DETAIL SCALE: 1" = 1'-0" (1)

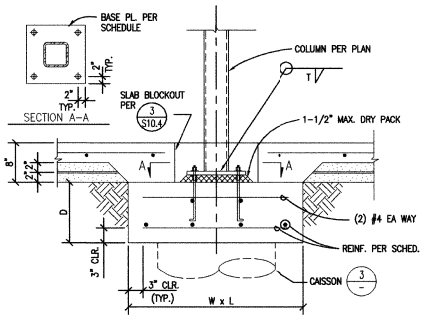

COLUMN SCHEDULE				
MARK	COLUMN	BASE PLATE SIZE	ANCHOR BOLT SIZE	WELD T
C-1	TS 6x6x1/4	PL 7/8"x 14"x 1'-2"	(4) 7/8"ø x 12"	1/4

FOOTING SCHEDULE			
MARK	W x L	" D "	FTG. REINF.
F-1	3'-6" x 3'-6"	1'-4"	(4) #6 EA. WAY

COLUMN FOOTING DETAIL SCALE: 1" = 1'-0" (2)

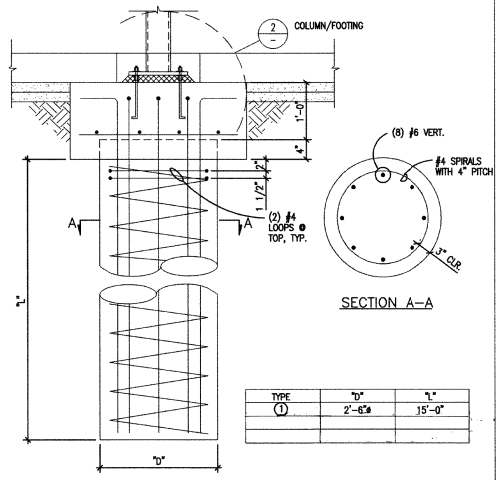

TYPE	"D"	"L"
1	2'-6"ø	15'-0"

CAISSON DETAIL SCALE: 1" = 1'-0" (3)

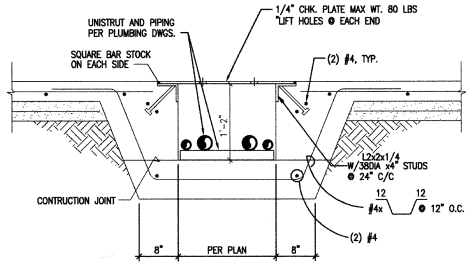

TRENCH DRAIN DETAIL SCALE: 1" = 1'-0" (4)

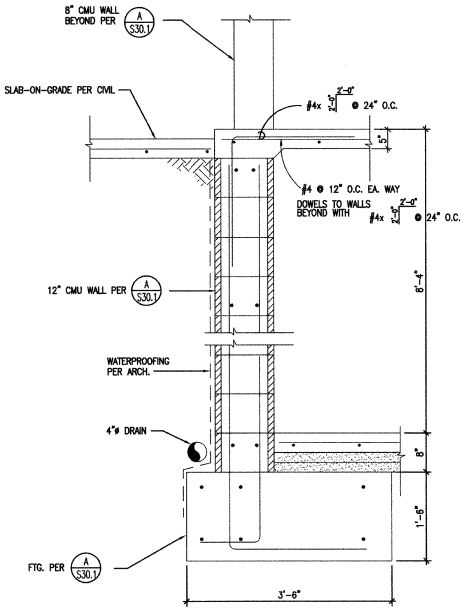

RETAINING WALL DETAIL SCALE: 1" = 1'-0" (5)

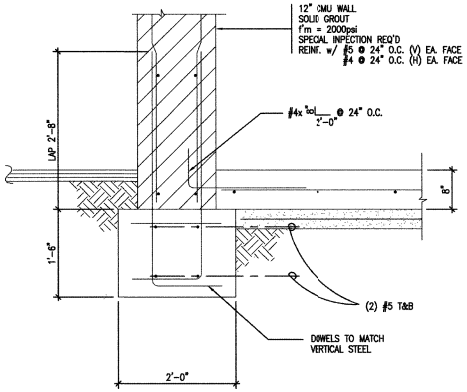

FOOTING DETAIL SCALE: 1" = 1'-0" (6)

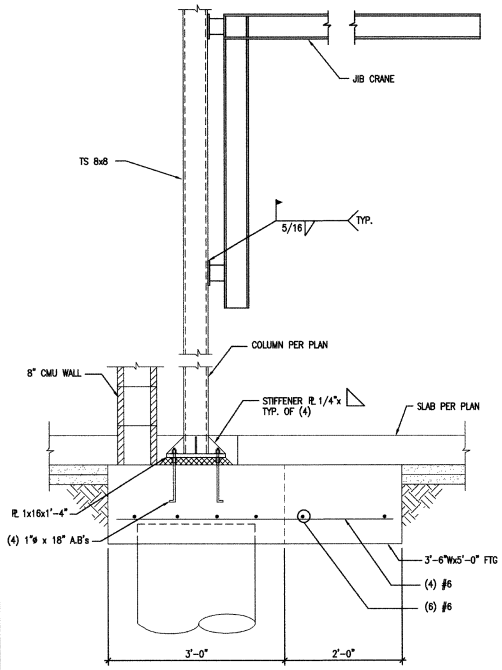

FOOTING DETAIL SCALE: 1" = 1'-0" (7)

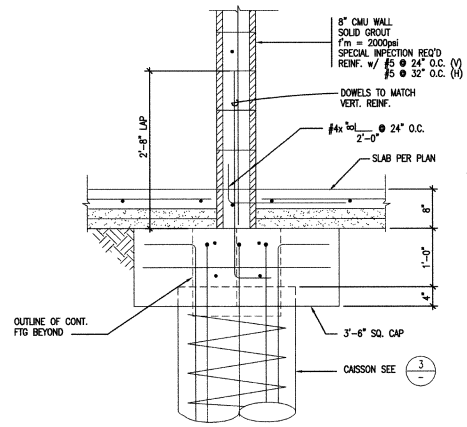

AS-BUILT
Q. dellamonica
Contract No. BUS-443B
Date NOV. 2000

FOOTING DETAIL SCALE: 1" = 1'-0" (8)

CONSTRUCTION CHANGE TABLE		
CHANGE	DATE	SHEET NUMBERS REVISED OR ADDED THIS CHANGE
1	5/24	ADDENDUM 1
2	5/24	ADDENDUM 2

SIMON WONG ENGINEERING
STRUCTURAL AND BRIDGE ENGINEERS
9968 Hibert Street, Suite 202
San Diego, CA 92131
(619) 566-3113

REGISTERED PROFESSIONAL ENGINEER DONALD R. ORIS No. S3838 EXP. 12-31-02 STRUCTURAL STATE OF CALIFORNIA

DESIGNED BY DRO	DATE 6/99
DRAWN BY DPM	6/99
CHECKED BY DRO	6/99
MTDB PRJ. ENG.	

MTDB
Metropolitan Transit Development Board
1255 Imperial Avenue, Suite 1000, San Diego, Ca. 92101-7490 (619)231-1466

IMPERIAL AVENUE DIVISION
BUS MAINTENANCE FACILITY

STRUCTURAL DETAILS – 1

SCALE	1" = 1'-0"
MTDB CONTRACT NO.	BUS-443B
DRAWING NO.	S50.1
SHEET NO.	58

SWE JOB No.204-02

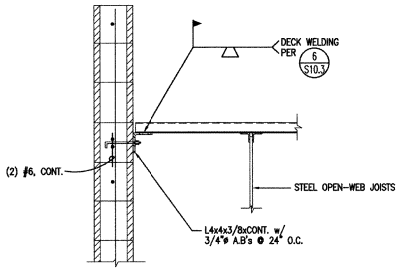

DECK SUPPORT DETAIL @ ROOF SCALE: 1" = 1'-0" (1)

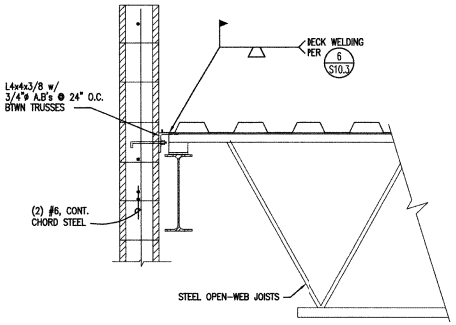

DECK SUPPORT DETAIL @ ROOF SCALE: 1" = 1'-0" (2)

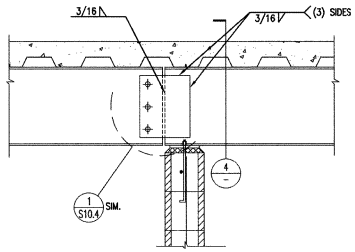

BEAM-TO-CMU WALL CONN. SCALE: 1" = 1'-0" (3)

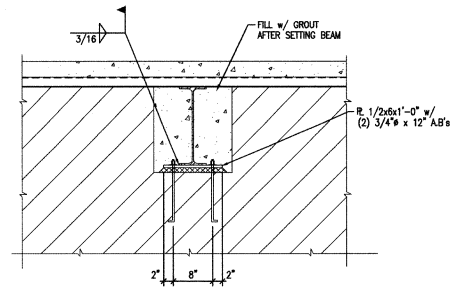

BEAM-TO-CMU WALL CONN. SCALE: 1" = 1'-0" (4)

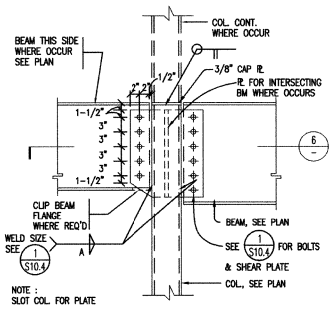

BM-TO-TS COL. CONNECTION SCALE: 1" = 1'-0" (5)

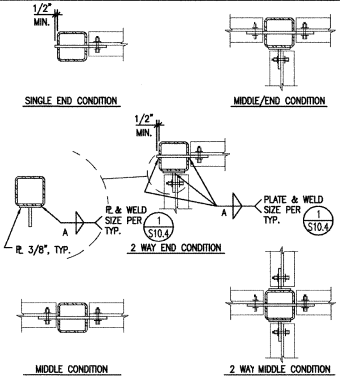

BM-TO-TS COL. CONNECTION SCALE: 1" = 1'-0" (6)

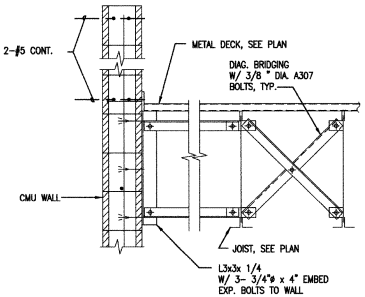

SECTION @ DIAGONAL BRIDGING SCALE: 1" = 1'-0" (7)

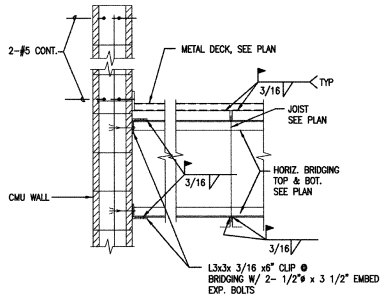

SECTION @ HORIZONTAL BRIDGING SCALE: 1" = 1'-0" (8)

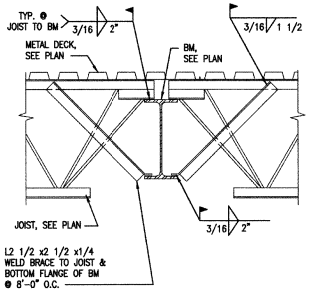

JOIST-TO-STEEL BM DETAIL SCALE: 1" = 1'-0" (9)

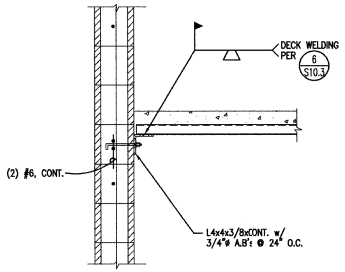

DECK SUPPORT DETAIL (AT 2ND FLR) SCALE: 1" = 1'-0" (10)

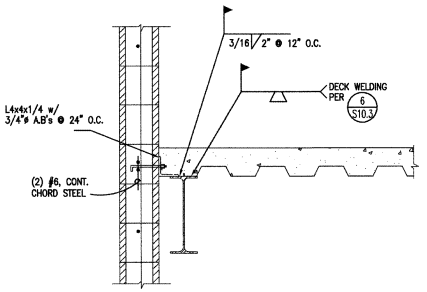

DECK SUPPORT DETAIL (AT 2ND FLR) SCALE: 1" = 1'-0" (11)

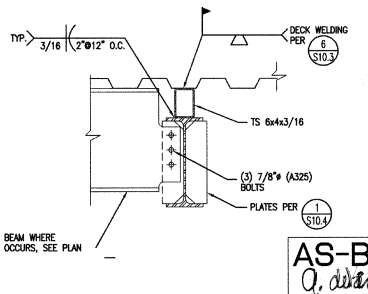

DECK-TO-BEAM SUPPORT DETAIL SCALE: 1" = 1'-0" (12)

AS-BUILT
Contract No. BUS-443B
Date NOV. 2000

CONSTRUCTION CHANGE TABLE		
CHANGE	DATE	SHEET NUMBERS REVISED OR ADDED THIS CHANGE

SIMON WONG ENGINEERING
STRUCTURAL AND BRIDGE ENGINEERS
9968 Hibert Street, Suite 202
San Diego, CA 92131
(619) 566-3113

REGISTERED PROFESSIONAL ENGINEER — RONALD R. DRO — No. S3838 — EXP. 12-31-02 — STRUCTURAL — STATE OF CALIFORNIA

DESIGNED BY DRO	DATE 6/99
DRAWN BY DPM	6/99
CHECKED BY DRO	6/99
MTDB PRJ. ENG.	

MTDB
Metropolitan Transit Development Board
1255 Imperial Avenue, Suite 1000, San Diego, Ca. 92101-7490 (619)231-1466

IMPERIAL AVENUE DIVISION
BUS MAINTENANCE FACILITY

STRUCTURAL DETAILS - 2

SCALE 1" = 1'-0"
MTDB CONTRACT NO. BUS-443B
DRAWING NO. S50.2
SHEET NO. 59
SWE JOB No.204-02

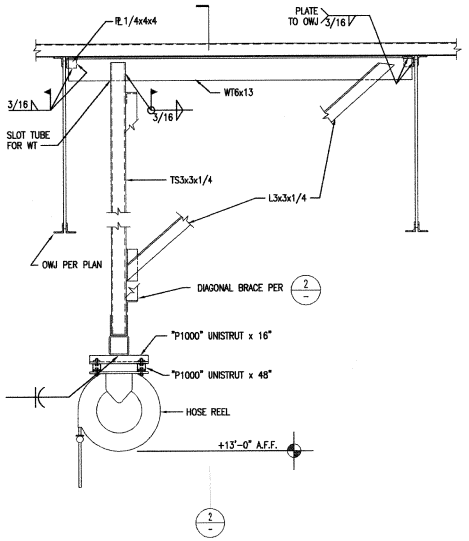

HOSE REEL SUPPORT DETAIL SCALE: 1" = 1'-0" (1)

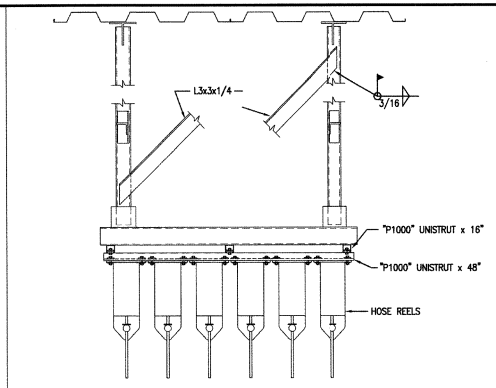

HOSE REEL SUPPORT DETAIL SCALE: 1" = 1'-0" (2)

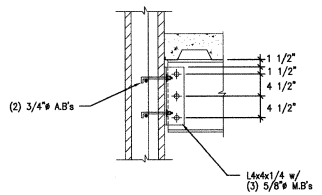

BEAM-TO-CMU WALL CONN. DETAIL SCALE: 1" = 1'-0" (3)

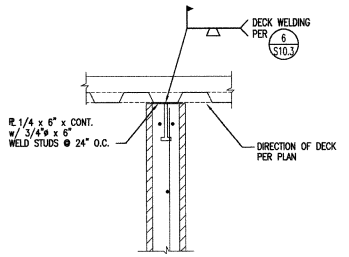

DECK-TO-CMU WALL CONN. DETAIL SCALE: 1" = 1'-0" (4)

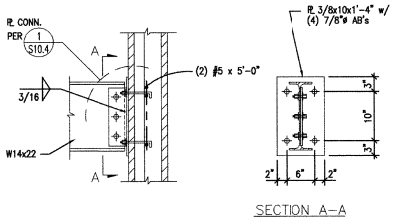

BM-TO-TS COL. CONNECTION SCALE: 1" = 1'-0" (5)

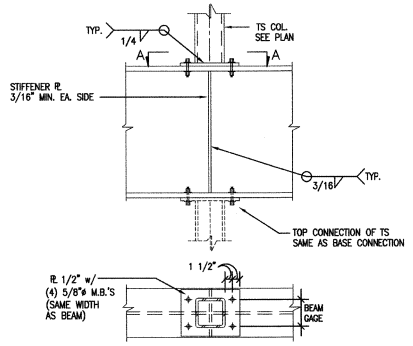

TS COLUMN-TO-BEAM CONN. DETAIL SCALE: 1" = 1'-0" (6)

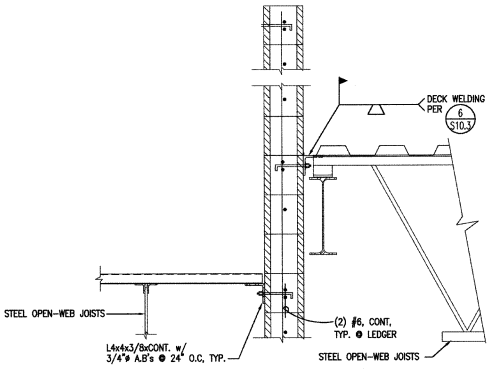

DECK-TO-CMU WALL CONN. DETAIL SCALE: 1" = 1'-0" (7)

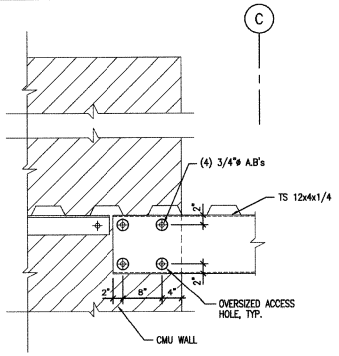

CHANNEL-TO-CMU WALL CONNECTION SCALE: 1" = 1'-0" (8)

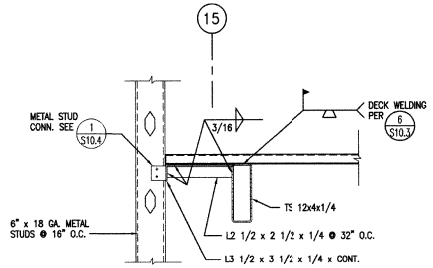

METAL STUD SUPPORT DETAIL SCALE: 1" = 1'-0" (9)

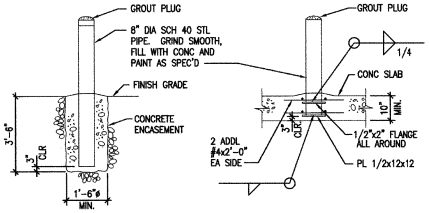

BOLLARD DETAIL SCALE: NO SCALE (10)

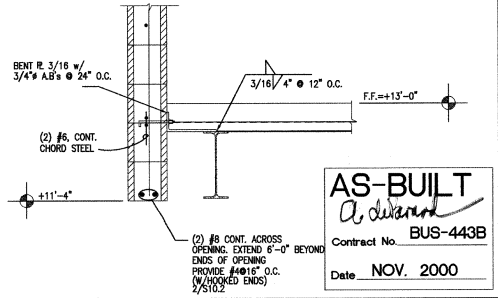

LINTEL DETAIL AT LINE (8) SCALE: 1" = 1'-0" (11)

CONSTRUCTION CHANGE TABLE		
CHANGE	DATE	SHEET NUMBERS REVISED OR ADDED THIS CHANGE

SIMON WONG ENGINEERING
STRUCTURAL AND BRIDGE ENGINEERS
9968 Hibert Street, Suite 202
San Diego, CA 92131
(619) 566-3113

REGISTERED PROFESSIONAL ENGINEER DONALD R. GILL No. S3838 EXP. 12-31-02 STRUCTURAL STATE OF CALIFORNIA

DESIGNED BY	DRO	6/99
DRAWN BY	DPM	6/99
CHECKED BY	DRO	6/99
MTDB PRJ. ENG.		

MTDB
Metropolitan Transit Development Board
1255 Imperial Avenue, Suite 1000, San Diego, Ca. 92101-7490 (619)231-1466

IMPERIAL AVENUE DIVISION
BUS MAINTENANCE FACILITY

STRUCTURAL DETAILS – 3

SCALE	1" = 1'-0"
MTDB CONTRACT NO.	BUS-443B
DRAWING NO.	S50.3
SHEET NO.	60

SWE JOB No.204-02

PACKAGED AIR CONDITIONING UNIT

MARK	DESCRIPTION	CFM	OSA CFM	ESP (IN. WG.)	SEER / AFUE %	COOLING CAPACITY (MBH) TOTAL	COOLING CAPACITY (MBH) SENSIBLE	EDB / EWB	LDB / LWB	HEATING CAPACITY (MBH) INPUT	HEATING CAPACITY (MBH) OUTPUT	ELECTRICAL DATA MCA	MCOP	VOLT	PH	HZ	AMB. TEMP. (°F)	OPER. WEIGHT (LBS.)	BASED ON: MANUFACTURER	MODEL	REMARKS
AC 1	GAS HEATING ELECTRIC COOLING	1,675	250	.50	9.7 / 80	48.96	36.02	76.4 / 63.6	56.5 / 53.7	72.0	59.2	11.4	15	460	3	60	90	730	CARRIER	48TJD 0025	WITH ROOF CURB, ECONOMIZER, COPPER/COPPER COIL
AC 2	GAS HEATING ELECTRIC COOLING	1,200	600	.50	8.7 / 80	35.0	26.0	79.1 / 66.5	53.6 / 53.1	72.0	59.2	8.5	15	460	3	60	90	720	CARRIER	48TJD 0024	WITH ROOF CURB, ECONOMIZER, COPPER/COPPER COIL
AC 3	GAS HEATING ELECTRIC COOLING	1,745	180	.50	8.5 / 80	56.54	44.67	75.6 / 62.7	53.4 / 53.1	72.0	59.2	14.8	20	460	3	60	90	760	CARRIER	48TJD 0026	WITH ROOF CURB, ECONOMIZER, COPPER/COPPER COIL
AC 4	GAS HEATING ELECTRIC COOLING	3,535	600	.75	9.0 / 80	113.85	88.84	76.2 / 63.4	53.6 / 53.1	180.0	144.0	23.4	30	460	3	60	90	2105	CARRIER	48TJD 0112	WITH ROOF CURB, ECONOMIZER, COPPER/COPPER COIL, POWER EXHAUST
AC 5	GAS HEATING ELECTRIC COOLING	1,970	405	.75	8.5 / 80	56.54	44.67	75.8 / 62.7	53.6 / 53.0	72.0	59.2	14.8	20	460	3	60	90	760	CARRIER	48TJD 0026	WITH ROOF CURB, ECONOMIZER, COPPER/COPPER COIL
AC 6	GAS HEATING ELECTRIC COOLING	1,570	150	-	8.5 / 80	56.22	44.38	75.5 / 62.5	53.6 / 53.0	72.0	59.2	14.8	20	460	3	60	90	760	CARRIER	48TJD 0026	WITH ROOF CURB, ECONOMIZER, COPPER/COPPER COIL

GAS FIRED MAKE-UP AIR UNIT SCHEDULE

MARK	DESCRIPTION	SERVICE	CFM	CFM OSA	ESP (IN. WG.)	FUEL	HEATING CAPACITY MBH INPUT	HEATING CAPACITY MBH OUTPUT	AFUE (%)	ELECTRICAL DATA HP	VOLT	PH	HZ	OPER. WEIGHT (LBS.)	BASED ON: MANUFACTURER	MODEL	REMARKS
HV 1	DIRECT-FIRED	MAINTENANCE BAY	23350	100 %	1.0	NATURAL GAS	1210	1008	80	10	460	3	60	4300	WEATHER RITE	HH224	HORIZONTAL DISCHARGE DAMPER, FILTER RACK, REMOTE CONTROLER
HV 2	DIRECT-FIRED	STORAGE, LOCKERROOM	1215	100 %	1.25	NATURAL GAS	671	560	80	1-1/2	460	3	60	1850	WEATHER RITE	HH218	HORIZONTAL DISCHARGE DAMPER, FILTER RACK, REMOTE CONTROLER
HV 3	DIRECT-FIRED	PAINT BOOTH	1500	100 %	.75	NATURAL GAS	388	324	80	5	460	3	60	1250	WEATHER RITE	HH215	HORIZONTAL DISCHARGE DAMPER, FILTER RACK, REMOTE CONTROLER

NOTE: PROVIDE WITH OUTSIDE AIR HOOD WITH 2 POSITION MOTORIZED OUTSIDE AIR DAMPER. PROVIDE FILTER RACK WITH 2" PLEATED FILTERS. MOTORS TO BE SPARK RESISTANT AND EXPLOSION PROF.

FAN SCHEDULE

MARK	DESCRIPTION	QUANTITY	CFM	ESP	RPM	ELECTRICAL DATA HP	VOLT	PH	HZ	OPER. WEIGHT (LBS.)	BASED ON: MANUFACTURER	MODEL	REMARKS
EF 1	UTILITY	8	3960	.375	1800	3/4	460	3	60	450	GREENHECK	SWB 20	W/ WEATHER HOOD, DRAIN, EXPLOSION PROOF MOTOR, 2 SPEED MOTOR 4 (2) SPEED STARTERS AMCA RATING, ALUMINUM WHEEL, INLET CONE, BACKDRAFT DAMPER.
EF 2	ROOF EXHAUSTER	8	2000	.25	520	1/4	120	1	60	101	GREENHECK	GB-200	W/ ROOF CURB AND BACKDRAFT DAMPER
EF 3	UTILITY	1	7100	4.0	1200	1 1/2	460	3	60	775	CARMON	CMB-40F	BACKDRAFT DAMPER, EXPLOSION PROOF MOTOR, WEATHER HOOD, EPOXY COATING
EF 4	ROOF EXHAUSTER	1	1400	.25	665	1/4	120	1	60	90	GREENHECK	GB-160	W/ ROOF CURB AND BACKDRAFT DAMPER EXPLOSION PROOF
EF 5	ROOF EXHAUSTER	1	2880	.5	930	3/4	460	3	60	101	GREENHECK	GB-180	W/ ROOF CURB AND BACKDRAFT DAMPER
EF 6	ROOF EXHAUSTER	1	10850	.875	480	3	480	3	60	331	GREENHECK	GB-420	W/ ROOF CURB AND BACKDRAFT DAMPER
EF 7	ROOF EXHAUSTER	1	500	.25	960	1/4	460	3	60	30	GREENHECK	GB-90	W/ ROOF CURB AND BACKDRAFT DAMPER
EF 8	ROOF EXHAUSTER	1	700	.25	1160	1/4	120	1	60	30	GREENHECK	GB-90	W/ ROOF CURB AND BACKDRAFT DAMPER
EF 9	UTILITY	1	8000	1.0	850	3	460	3	60	600	GREENHECK	SWB 27	W/ WEATHER HOOD, DRAIN, EXPLOSION PROOF MOTOR AMCA RATING, ALUMINUM WHEEL, BACKDRAFT DAMPER
EF 10	UTILITY	1	600	3.0	2,735	3/4	120	3	60	120	CARMON	CMB-10	W/EXOPY COATING, WEATHER HOOD, DRAIN, EXPLOSION PROOF MOTOR BACKDRAFT DAMPER
EF 11	ROOF EXHAUSTER	1	700	Ø.35	1200	1/4	120	1	60	30	GREENHECK	GB-90	W/ ROOF CURB AND BACKDRAFT DAMPER

DIFFUSERS, GRILLES & REGISTERS

MARK	NECK SIZE	DAMPER	BASED ON: MANUFACTURER	MODEL	REMARKS	MARK	NECK SIZE	DAMPER	BASED ON: MANUFACTURER	MODEL	REMARKS
A	8"X8"	-	TITUS	MCD	-	AA	22"X22"	-	TITUS	50F	-
B	10"X10"	-	TITUS	MCD		BB	10"X10"		TITUS	50F	
C	12"X12"	-	TITUS	MCD		CC	12"X12"		TITUS	50F	
D	14"X14"	-	TITUS	MCD		DD	14"X14"		TITUS	50F	
E	12"X12"	-	THERMA-FUSER	TFC-HC		EE	24"X16"		TITUS	50F	
						FF	24"X12"		TITUS	350RL	FOR BLADE ADJUSTMENT SEE DETAIL #3 SHEET M-6

NOTE: DIFFUSERS & GRILLES SHALL HAVE FRAMES TO MATCH THE CEILINGS IN WHICH THEY ARE INSTALLED. I.E.: T-BAR CEILING: LAY-IN FRAMES, GYPSUM BOARD CEILING: FLUSH MOUNTED FRAMES.

GENERAL NOTES

1. DUCT FABRICATION AND INSTALLATION SHALL CONFORM TO THE "HVAC DUCT CONSTRUCTION STANDARDS - METAL AND FLEXIBLE" AS PUBLISHED BY SMACNA 1995 EDITION.
2. DUCT LINER APPLICATION SHALL CONFORM TO THE "HVAC DUCT CONSTRUCTION STANDARDS - METAL AND FLEXIBLE" AS PUBLISHED BY SMACNA 1995 EDITION.
3. MECHANICAL SYSTEM SEISMIC RESTRAINTS SHALL CONFORM TO "GUIDELINES FOR SEISMIC RESTRAINTS OF MECHANICAL SYSTEMS" AS PUBLISHED BY SMACNA 1996 EDITION OSA APPROVED MARCH 1996.
4. BRANCHES TO DIFFUSER, REGISTERS AND GRILLES SHALL BE SUPPLIED WITH MANUAL VOLUME DAMPERS, DAMPER QUADRANT SHALL BE 3/8 MINIMUM, POSITION TO BE INDICATED BY QUADRANT. ALL DAMPERS THAT ARE INACCESSIBLE SHALL BE PROVIDED WITH REMOTE OPERATORS SIMILAR TO YOUNG REGULATOR.
5. EQUIPMENT ACCESS SHALL CONFORM TO UMC SECTION 309.
6. MISCELLANEOUS METAL, ANGLES, BRACING OR SUPPORTS EXPOSED TO THE WEATHER SHALL BE GALVANIZED IRON OR BLACK IRON PAINTED WITH ONE COAT OF RUST INHIBITING PAINT AND ONE COAT OF GRAY PRIMER.
7. FIRE DAMPERS SHALL BE INSTALLED IN DUCTS PENETRATING RATED FIRE SEPARATIONS. ACCESS DOORS SHALL BE PROVIDED FOR INSPECTION AND REPLACEMENT OF THE FUSIBLE LINK. FIRE DAMPER ASSEMBLIES, INCLUDING SLEEVES, AND INSTALLATION PROCEDURES SHALL BE APPROVED BY THE BUILDING INSPECTOR PRIOR TO INSTALLATION.
8. ALL SUPPLY AND RETURN AND EXHAUST DUCTS SHALL BE SEALED AIRTIGHT AT ALL DUCT JOINTS, BRANCH TAKEOFFS AND CONNECTIONS TO EQUIPMENT WITH A NON-HARDENING, NON-MIGRATING MASTIC OR LIQUID ELASTIC SEALANT, AS RECOMMENDED BY THE MANUFACTURER SPECIFICALLY FOR SEALING JOINTS AND SEAMS IN DUCTWORK. DUCT TAPE SHALL NOT BE USED AS A SEALER.
9. DUCT SEAMS AND JOINTS EXPOSED TO WEATHER SHALL BE CAULKED WATERTIGHT WITH ACRYLIC SEALANT AND SHALL HAVE 4 INCH MINIMUM WIDTH OF 6 OUNCE CANVAS PASTED ON WITH LAGGING ADHESIVE. PAINT WITH ASPHALT BASED ALUMINUM PAINT TO MATCH ADJACENT WORK.
10. GAS FIRED EQUIPMENT SHALL HAVE CLEARANCES PER MANUFACTURER'S SPECIFICATIONS BASED ON AGA APPROVAL.
11. MECHANICAL CONTRACTOR SHALL COORDINATE THEIR INSTALLATION LOCATIONS WITH OTHER TRADES PRIOR TO INSTALLATION OF EQUIPMENT.
12. INSULATED DUCT SHALL REMAIN UNCOVERED UNTIL DUCT JOINTS HAVE BEEN APPROVED BY THE ENGINEER. IF WORK REQUIRED TO BE INSPECTED IS COVERED BEFORE THE APPROVAL OF THE ENGINEER, IT SHALL BE UNCOVERED FOR INSPECTION AT THIS CONTRACTOR'S EXPENSE.
13. ALL CONTROL WIRING SHALL BE IN CONDUIT AND ARE THE RESPONSIBILITY OF THE MECHANICAL CONTRACTOR. ALL THERMOSTATS SHALL BE MOUNTED 48 INCHES ABOVE FINISHED FLOOR.
14. INTERCONNECTING WIRING SAFETY SWITCHES, RELAYS, CONTROLLERS AND MOTOR STARTERS WHICH ARE INTEGRAL COMPONENTS OF PACKAGED EQUIPMENT SHALL BE PROVIDED AS AN INTEGRAL PART OF THAT EQUIPMENT.
15. ALL ELECTRICAL, MECHANICAL AND PLUMBING PENETRATIONS THROUGH FIRE RATED AREA SEPARATION AND CORRIDOR ASSEMBLIES INCLUDING CONDUITS AND PIPING SHALL BE TIGHTLY AND SOLIDLY SEALED WITH FIRESTOPPING WALLBOARD COMPOUND AND SHALL BE AN APPROVED MATERIAL AS PRESCRIBED IN STATE FIRE MARSHAL STANDARD 7-1. WHERE PLUMBING PENETRATES AN AREA SEPARATION WALL SURFACE, THE SECTION PASSING THROUGH THE WALL SURFACE AND THE FIXTURE CONNECTIONS THERETO SHALL BE ONLY OF METAL.
16. ALL CONSTRUCTION SHALL BE DONE IN ACCORDANCE WITH:

    ALL WORK AND MATERIALS SHALL BE IN FULL ACCORDANCE WITH THE REQUIREMENTS OF THESE CODES AND ALL APPLICABLE LOCAL ORDINANCES. WHERE CONTRACT DOCUMENTS EXCEED WITHOUT VIOLATING CODE AND REGULATION REQUIREMENTS, CONTRACT DOCUMENTS TAKE PRECEDENCE, WHERE CODES CONFLICT, THE MORE STRINGENT SHALL APPLY.

    UNIFORM BUILDING CODE - 1994 EDITION
    UNIFORM MECHANICAL CODE - 1994 EDITION
    UNIFORM PLUMBING CODE - 1994 EDITION
    UNIFORM FIRE CODE - 1994 EDITION
    NATIONAL ELECTRICAL CODE - 1993 EDITION

AS-BUILT
A. deBerard
Contract No. BUS-443B
Date NOV. 2000

LEGEND

SYMBOL	ABBR.	DESCRIPTION
X / X		EQUIPMENT SYMBOL / NUMBER
		DUCT (RECTANGULAR OR ROUND)
	(L)	DUCT (LINED)
	(L)	DUCT (LINED)
		FLEXIBLE DUCT
	FC	DUCT FLEXIBLE CONNECTION
		SQUARE ELBOW WITH TURNING VANES
		RADIUS ELBOW
		DUCT TRANSITION
		45 DEGREE BRANCH TAKE-OFF
		END DOUBLE BRANCH WITH TURNING VANES
	VD	MANUAL VOLUME DAMPER
M	MD	MOTORIZED DAMPER
	F&D	FIRE SMOKE/DAMPER
	FD	FIRE DAMPER
	SA	SUPPLY AIR DIFFUSER/DUCT
	RA	RETURN AIR GRILLE/DUCT
	EA	EXHAUST AIR GRILLE/DUCT
	UP	DUCT RISE/UP THRU ROOF OR FLOOR
	DN	DUCT DROP/DOWN THRU ROOF OR FLOOR
	SM	SHEETMETAL
SD		SMOKE DETECTOR
S		SWITCH
T		THERMOSTAT (MOUNT @ 48" A.F.F.)
	CFM	CUBIC FEET PER MINUTE
	D/L	DOOR LOUVER
AD	AD	ACCESS DOOR
POC	POC	POINT OF CONNECTION
	U/C	UNDERCUT
	ϕ	DIAMETER
	DWG	DRAWING
	ARCH	ARCHITECTURAL
	AFF	ABOVE FINISHED FLOOR

T-24 NOTES

THE FOLLOWING SHALL BE COMPLIED WITH UNLESS MORE RESTRICTIVE REQUIREMENTS ARE SHOWN ON THE PLANS OR CALLED FOR IN THE SPECIFICATIONS.

1. INSULATION MATERIAL SHALL MEET THE CALIFORNIA QUALITY STANDARD PER SECTION 118 E.E.S.
2. ALL PIPING AND DUCTWORK SHALL BE INSULATED CONSISTENT WITH THE REQUIREMENTS OF SECTIONS 118, 123 AND 124 E.E.S. AND TABLE 10D.U.M.C.
3. ALL HVAC SYSTEMS SHALL MEET THE CONTROL REQUIREMENTS PER SECTIONS 112 AND 122 E.E.S.
4. ALL HVAC EQUIPMENT AND APPLIANCES SHALL MEET THE REQUIREMENTS PER SECTIONS 111-113, 115 AND 120-129 E.E.S.

TMAD Engineers, Inc.
Mechanical and Electrical Consulting Engineers
Project Number 2000.017
TELEPHONE (858) 271-9808
FAX: (858) 271-8932
8845 ERMA ROAD SUITE 200 SAN DIEGO, CA 92131
tmad@cts.com

CONSTRUCTION CHANGE TABLE

CHANGE	DATE	SHEET NUMBERS REVISED OR ADDED THIS CHANGE
4	4/17/00	SECOND FLOOR INTERIOR IMPROVEMENTS

STV Incorporated
ENGINEERS/ARCHITECTS/PLANNERS/CONSTRUCTION MANAGERS
1055 WILSHIRE BOULEVARD, SUITE 1455
LOS ANGELES, CALIFORNIA 90017-2499

LICENSED ARCHITECT FOR 500 YEARS C-24485 RENEWAL DATE STATE OF CALIFORNIA

		DATE
DESIGNED BY	BM	
DRAWN BY	TW	
CHECKED BY	BM	
MTDB PRJ. ENG.		

MTDB
Metropolitan Transit Development Board
1255 Imperial Avenue, Suite 1000, San Diego, Ca. 92101-7490 (619)231-1466

IMPERIAL AVENUE DIVISION
BUS MAINTENANCE FACILITY

MECHANICAL SCHEDULES
LEGEND AND NOTES

SCALE: NONE
MTDB CONTRACT NO.: BUS-443B
DRAWING NO.: M-1
SHEET NO.: 61

Y:\2000\2100.017\MPE\017M-1.dwg 04/20/00 1:16PM

VOLUME AND BYPASS DAMPERS

MARK	AREA SERVED	TERMINAL UNIT SIZE	TOTAL AIR PRESSURE DROP IN. W.G.	MAXIMUM CFM	MINIMUM CFM	TYPE OF CONTROL	BASED ON: MANUFACTURER	BASED ON: MODEL	REMARKS
VD 1	COMPUTER TRAINING ROOM 22	12"ϕ	0.035	615	300	ELECTRIC	CARRIER	DAMPBAR12INC	-
VD 2	DRIVERS CLASSROOM	12"ϕ	0.035	630	305	ELECTRIC	CARRIER	DAMPBAR12INC	-
VD 3	OFFICES 224 AND 226	12"ϕ	0.035	740	310	ELECTRIC	CARRIER	DAMPBAR12INC	-

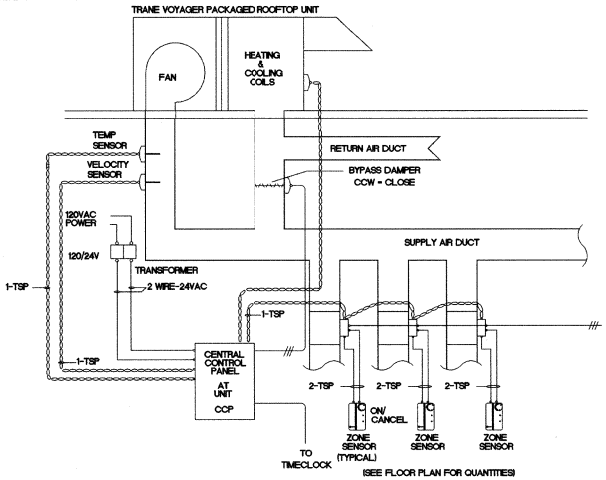

VT SYSTEM FOR AC-5

NO SCALE

CERTIFICATE OF COMPLIANCE — PART 1 OF 2 — ENV-1

PROJECT NAME: MTDB BMF IAD
DATE: 22 JUNE 1998
PROJECT ADDRESS: IMPERIAL AVE, SAN DIEGO, CA.
PRINCIPAL DESIGNER–ENVELOPE: STV
TELEPHONE:
BUILDING PERMIT #:
DOCUMENTATION AUTHOR: TMAD ENGINEERS, INC.
TELEPHONE: 619-271-9808
CHECKED BY/DATE:
ENFORCEMENT AGENCY USE:

GENERAL INFORMATION

DATE OF PLANS	BUILDING CONDITIONED FLOOR AREA	CLIMATE ZONE
22 JUNE 1998	44,816 sqft.	#07

BUILDING TYPE	PHASE OF CONSTRUCTION	METHOD OF ENVELOPE COMPLIANCE
☒ NONRESIDENTIAL	☒ NEW CONSTRUCTION	☒ COMPONENT
☐ HIGH RISE RESIDENTIAL	☐ ADDITION	☐ OVERALL ENVELOPE
☐ HOTEL/MOTEL GUEST ROOM	☐ ALTERATION	☐ PERFORMANCE
	☐ UNCONDITIONED(FILE AFFADAVIT)	

STATEMENT OF COMPLIANCE

THIS CERTIFICATE OF COMPLIANCE LISTS THE BUILDINGS FEATURES AND PERFORMANCE SPECIFICATIONS NEEDED TO COMPLY WITH TITLE 24, PARTS 1 AND 6 OF THE CALIFORNIA CODE OF REGULATIONS. THIS CERTIFICATE APPLIES ONLY TO THE BUILDING ENVELOPE REQUIREMENTS.

THE PRINCIPLE ENVELOPE DESIGNER HEREBY CERTIFIES THAT THE PROPOSED BUILDING DESIGN REPRESENTED IN THIS SET OF CONSTRUCTION DOCUMENTS IS CONSISTENT WITH THE OTHER COMPLIANCE FORMS AND WORKSHEETS, WITH THE SPECIFICATIONS, AND WITH ANY OTHER CALCULATIONS SUBMITTED WITH THIS PERMIT APPLICATION. THE PROPOSED BUILDING HAS BEEN DESIGNED TO MEET THE ENVELOPE REQUIREMENTS CONTAINED IN SECTIONS 110, 116 THROUGH 118, AND 143 OR 149 PART 6, CHAPTER 1.

PLEASE CHECK ONE:

☐ I HEREBY AFFIRM THAT I AM ELIGIBLE UNDER THE PROVISIONS OF DIVISION 3 OF THE BUSINESS AND PROFESSIONAL CODE TO SIGN THIS DOCUMENT AS THE PERSON RESPONSIBLE FOR ITS PREPARATION: AND THAT I AM A CIVIL ENGINEER OR ARCHITECT.

☐ I AFFIRM THAT I AM ELIGIBLE UNDER THE EXEMPTION TO DIVISION 3 OF THE BUSINESS AND PROFESSIONAL CODE BY SECTION 5537.2 OF THE BUSINESS AND PROFESSIONAL CODE TO SIGN THIS DOCUMENT AS THE PERSON RESPONSIBLE FOR ITS PREPARATION: AND THAT I AM A LICENSED CONTRACTOR PREPARING DOCUMENTS FOR WORK THAT I HAVE CONTRACTED TO PREFORM.

☐ I AFFIRM THAT I AM ELIGIBLE UNDER THE EXEMPTION TO DIVISION 3 OF THE BUSINESS AND PROFESSIONAL CODE BY SECTION_____ OF THE_____ CODE TO SIGN THIS DOCUMENT AS THE PERSON RESPONSIBLE FOR ITS PREPARATION: AND FOR THE FOLLOWING REASON_____

PRINCIPAL ENVELOPE DESIGNER–NAME	SIGNATURE	LICENSE NO.	DATE
KEVIN KIM			

ENVELOPE MANDATORY MEASURES

INDICATE LOCATION ON PLANS OF NOTE BLOCK FOR MANDATORY MEASURES

INSTRUCTIONS TO APPLICANT

FOR DETAILED INSTRUCTIONS ON THE USE OF THIS AND ALL ENERGY EFFICIENCY STANDARDS COMPLIANCE FORMS, PLEASE REFER TO THE NONRESIDENTIAL MANUAL PUBLISHED BY THE CALIFORNIA ENERGY COMMISSION.

ENV–1: REQUIRED ON PLANS FOR ALL SUBMITTALS. PART 2 MAY BE INCORPORATED IN SCHEDULES ON PLANS.
ENV–2: USED FOR ALL SUBMITTALS; CHOOSE APPROPRIATE VERSION DEPENDING ON METHOD OF ENVELOPE COMPLIANCE.
ENV–3: OPTIONAL. USE IF DEFAULT U–VALUES ARE NOT USED. CHOOSE APPROPRIATE VERSION FOR ASSEMBLY U–VALUE TO BE CALCULATED.

NONRESIDENTIAL COMPLIANCE FORM — DECEMBER 1991

CERTIFICATE OF COMPLIANCE — PART 1 OF 3 — MECH-1

PROJECT NAME: MTDB BMF IAD
DATE: 22 JUNE 1998
PROJECT ADDRESS: IMPERIAL AVE, SAN DIEGO, CA.
PRINCIPLE DESIGNER–MECHANICAL: TMAD ENGINEERS, INC.
TELEPHONE: 619-271-9808
BUILDING PERMIT #:
DOCUMENTATION AUTHOR: TMAD ENGINEERS, INC.
TELEPHONE: 619-271-9808
CHECKED BY/DATE:
ENFORCEMENT AGENCY USE:

GENERAL INFORMATION

DATE OF PLANS	BUILDING CONDITIONED FLOOR AREA
22 JUNE 1998	44,816 SQ. FT.

BUILDING TYPE	PHASE OF CONSTRUCTION	METHOD OF MECHANICAL COMPLIANCE	PROOF OF ENVELOPE COMPLIANCE
☒ NONRESIDENTIAL	☒ NEW CONSTRUCTION	☒ PRESCRIPTIVE	☐ PREVIOUS ENVELOPE PERMIT
☐ HIGH RISE RESIDENTIAL	☐ ADDITION	☐ PERFORMANCE	☒ ENVELOPE COMPLIANCE ATTACHED
☐ HOTEL/MOTEL GUEST ROOM	☐ ALTERATION		
	☐ UNCONDITIONED (FILE AFFADAVIT)		

STATEMENT OF COMPLIANCE

THIS CERTIFICATE OF COMPLIANCE LISTS THE BUILDINGS FEATURES AND PERFORMANCE SPECIFICATIONS NEEDED TO COMPLY WITH TITLE 24, PARTS 1 AND 6 OF THE CALIFORNIA CODE OF REGULATIONS. THIS CERTIFICATE APPLIES ONLY TO THE BUILDING MECHANICAL REQUIREMENTS.

THE DOCUMENTATION PREPARER HEREBY CERTIFIES THAT THE DOCUMENTATION IS ACCURATE AND COMPLETE

DOCUMENTATION AUTHOR	SIGNATURE	DATE
BONG MANLULU		22 JUNE 1998

THE PRINCIPLE MECHANICAL DESIGNER HEREBY CERTIFIES THAT THE PROPOSED BUILDING DESIGN REPRESENTED IN THIS SET OF CONSTRUCTION DOCUMENTS IS CONSISTENT WITH THE OTHER COMPLIANCE FORMS AND WORKSHEETS, WITH THE SPECIFICATIONS, AND WITH ANY OTHER CALCULATIONS SUBMITTED WITH THIS PERMIT APPLICATION. THE PROPOSED BUILDING HAS BEEN DESIGNED TO MEET THE MECHANICAL REQUIREMENTS CONTAINED IN SECTIONS 110 THROUGH 115, 120 THROUGH 124, 140 THROUGH 142,144 AND 145.

PLEASE CHECK ONE:

☐ I HEREBY AFFIRM THAT I AM ELIGIBLE UNDER THE PROVISIONS OF DIVISION 3 OF THE BUSINESS AND PROFESSIONAL CODE TO SIGN THIS DOCUMENT AS THE PERSON RESPONSIBLE FOR ITS PREPARATION: AND THAT I AM A CIVIL ENGINEER, MECHANICAL ENGINEER, OR ARCHITECT.

☐ I AFFIRM THAT I AM ELIGIBLE UNDER THE EXEMPTION TO DIVISION 3 OF THE BUSINESS AND PROFESSIONAL CODE BY SECTION 5537.2 OF THE BUSINESS AND PROFESSIONAL CODE TO SIGN THIS DOCUMENT AS THE PERSON RESPONSIBLE FOR ITS PREPARATION: AND THAT I AM A LICENSED CONTRACTOR PREPARING DOCUMENTS FOR WORK THAT I HAVE CONTRACTED TO PREFORM.

☐ I AFFIRM THAT I AM ELIGIBLE UNDER THE EXEMPTION TO DIVISION 3 OF THE BUSINESS AND PROFESSIONAL CODE BY SECTION_____ OF THE_____ CODE TO SIGN THIS DOCUMENT AS THE PERSON RESPONSIBLE FOR ITS PREPARATION: AND FOR THE FOLLOWING REASON_____

PRINCIPAL MECHANICAL DESIGNER–NAME	SIGNATURE	LICENSE NO.	DATE
CHRIS RADTKE, PE		M24519	9/30/101

MECHANICAL MANDATORY MEASURES

INDICATE LOCATION ON PLANS OF NOTE BLOCK FOR MANDATORY MEASURES: M-1

INSTRUCTIONS TO APPLICANT

FOR DETAILED INSTRUCTIONS ON THE USE OF THIS AND ALL ENERGY EFFICIENCY STANDARDS COMPLIANCE FORMS, PLEASE REFER TO THE NONRESIDENTIAL MANUAL PUBLISHED BY THE CALIFORNIA ENERGY COMMISSION.

MECH–1: REQUIRED ON PLANS FOR ALL SUBMITTALS. PARTS 2 & 3 MAY BE INCORPORATED IN SCHEDULES ON PLANS.
MECH–2: REQUIRED FOR ALL SUBMITTALS; CHOOSE APPROPRIATE VERSION DEPENDING ON METHOD OF MECHANICAL COMPLIANCE.
MECH–3: REQUIRED FOR ALL SUBMITTALS, BUT FORM DOES NOT HAVE TO BE COMPLETED IF LOCATION OF MECHANICAL EQUIPMENT SCHEDULE IS INDICATED ON THE FORM PER SECTION 4.3.3.
MECH–4: REQUIRED FOR ALL SUBMITTALS UNLESS REQUIRED OUTDOOR VENTILATION RATES AND AIRFLOWS ARE SHOWN ON PLANS PER SECTION 4.3.4.

NONRESIDENTIAL COMPLIANCE FORM — DECEMBER 1991

CONTROLS DIAGRAM

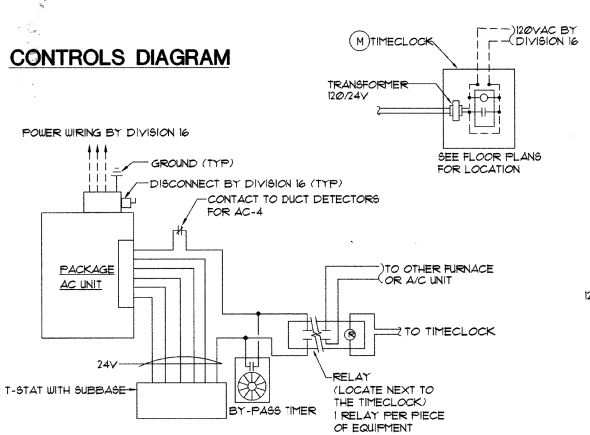

NOTE: ALL WIRING TO BE IN CONDUIT (3/4" MINIMUM SIZE). WIRING TO MEET ALL REQUIREMENTS FOR NEC OR CEC AND DIVISION 16 SPECIFICATIONS.

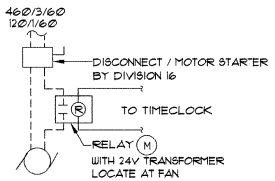

NOTE: EF-2, EF-3, EF-6 AND EF-10 SHALL BE INTERLOCKED WITH METHANE DETECTORS SEE ELECTRICAL DRAWINGS

EXHAUST FANS (GENERAL EXHAUST)

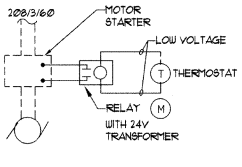

EXHAUST FANS (EF-7 AND EF-8)

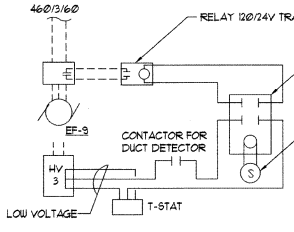

HV-3 AND EF-9

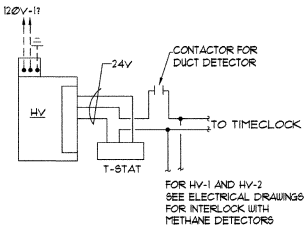

FOR HV-1 AND HV-2 SEE ELECTRICAL DRAWINGS FOR INTERLOCK WITH METHANE DETECTORS

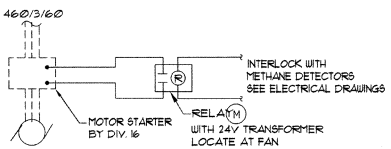

EXHAUST FAN EF-1 (CNG EXHAUST)

M BY MECHANICAL CONTRACTOR
---- BY ELECTRICAL
——— BY MECHANICAL

HEATING AND VENTILATING UNIT

SEQUENCE OF OPERATION

AC-1 to 6, EF-2, 3. 4, 5, 6 AND 10, HV-1, 2 SHALL BE STARTED/STOPPED BY AN AUTOMATIC TIME SWITCH WITH 4 HOUR BYPASS TIMER FOR OFF-HOURS OPERATION. THE TIME SWITCH SHALL BE CAPABLE OF PROGRAMMING DIFFERENT SCHEDULE FOR WEEKDAYS, WEEKENDS, AND HOLIDAYS. AC UNITS SHALL THEN BE CONTROLLED BY THEIR RESPECTIVE THERMOSTAT. THERMOSTAT SHALL BE SET PER TITLE 24.

EXHAUST FANS AND MAKE-UP AIR UNITS, WILL RUN SIMULTANEOUSLY. HEATING WILL BE PROVIDED WHEN THERMOSTAT SENSES A DROP IN TEMPERATURE BELOW 65 DEGREES F. THERMOSTAT WILL HAVE ON/OFF SWITCH WHICH WILL BE OVERRIDDEN BY METHANE DETECTOR CONTROL SYSTEM (HV-1#2). THERMOSTAT FOR MAKE-UP AIR UNITS WILL HAVE SWITCHING FOR ON/OFF AND HEAT.

INTERLOCK EXHAUST FANS (EF-1) WITH THE METHANE DETECTORS AND ALARM SYSTEM. UPON METHANE DETECTION OF 20 PERCENT OF LEL, THE MAKE-UP AIR UNIT WILL BE ENERGIZED AND THE EXHAUST FANS WILL BE AT HIGH SPEED TO PROVIDE A MINIMUM OF 6 AIR CHANGES PER HOUR OF VENTILATION. UPON A 40 PERCENT LEL READING, AN AUTOMATIC SWITCH WILL SHUT OFF ALL POWER TO MAINTENANCE BAYS, EXCEPT FOR VENTILATION SYSTEM.

THERMOSTATS TO HAVE FAN CONTROLS OF ON/OFF, AND AUTO CHANGEOVER FOR HEATING AND COOLING. AND 5 DEGREES DEADBAND.

HV-3 & EF-9 SHALLL INTERLOCK AND RUN CONTINOUSLY. A MANUAL SHUTOFF (SEE PLAN FOR LOCATION) W/ BREAKABLE GLASS , SHALL DE-ENERGIZE AND ENERGIZE HV-3 AND EF-9.

AS-BUILT
Contract No. BUS-443B
Date NOV. 2000

TMAD Engineers, Inc.
Mechanical and Electrical Consulting Engineers
Project Number 2000.017
TELEPHONE (858) 271-9808
FAX: (858) 271-9932
9645 ERMA ROAD SUITE 200 SAN DIEGO, CA 92131
tmad@cts.com

CONSTRUCTION CHANGE TABLE

CHANGE	DATE	SHEET NUMBERS REVISED OR ADDED THIS CHANGE
4	4/17/00	SECOND FLOOR INTERIOR IMPROVEMENTS

STV Incorporated
ENGINEERS/ARCHITECTS/PLANNERS/CONSTRUCTION MANAGERS
1055 WILSHIRE BOULEVARD, SUITE 1455
LOS ANGELES, CALIFORNIA 90017-2499

LICENSED ARCHITECT — TIN SOO YU — C-24485 — RENEWAL DATE — STATE OF CALIFORNIA

DESIGNED BY	DATE
BM	
DRAWN BY TW	
CHECKED BY BM	
MTDB PRJ. ENG.	

MTDB
Metropolitan Transit Development Board
1255 Imperial Avenue, Suite 1000, San Diego, Ca. 92101-7490 (619)231-1466

IMPERIAL AVENUE DIVISION
BUS MAINTENANCE FACILITY

MECHANICAL SCHEDULES
LEGEND AND NOTES

SCALE	NONE
MTDB CONTRACT NO.	BUS-443B
DRAWING NO.	M-1.1
SHEET NO.	62

Y:\2000\2100.017\MPE\017M-1_1.dwg 04/20/00 1:16PM

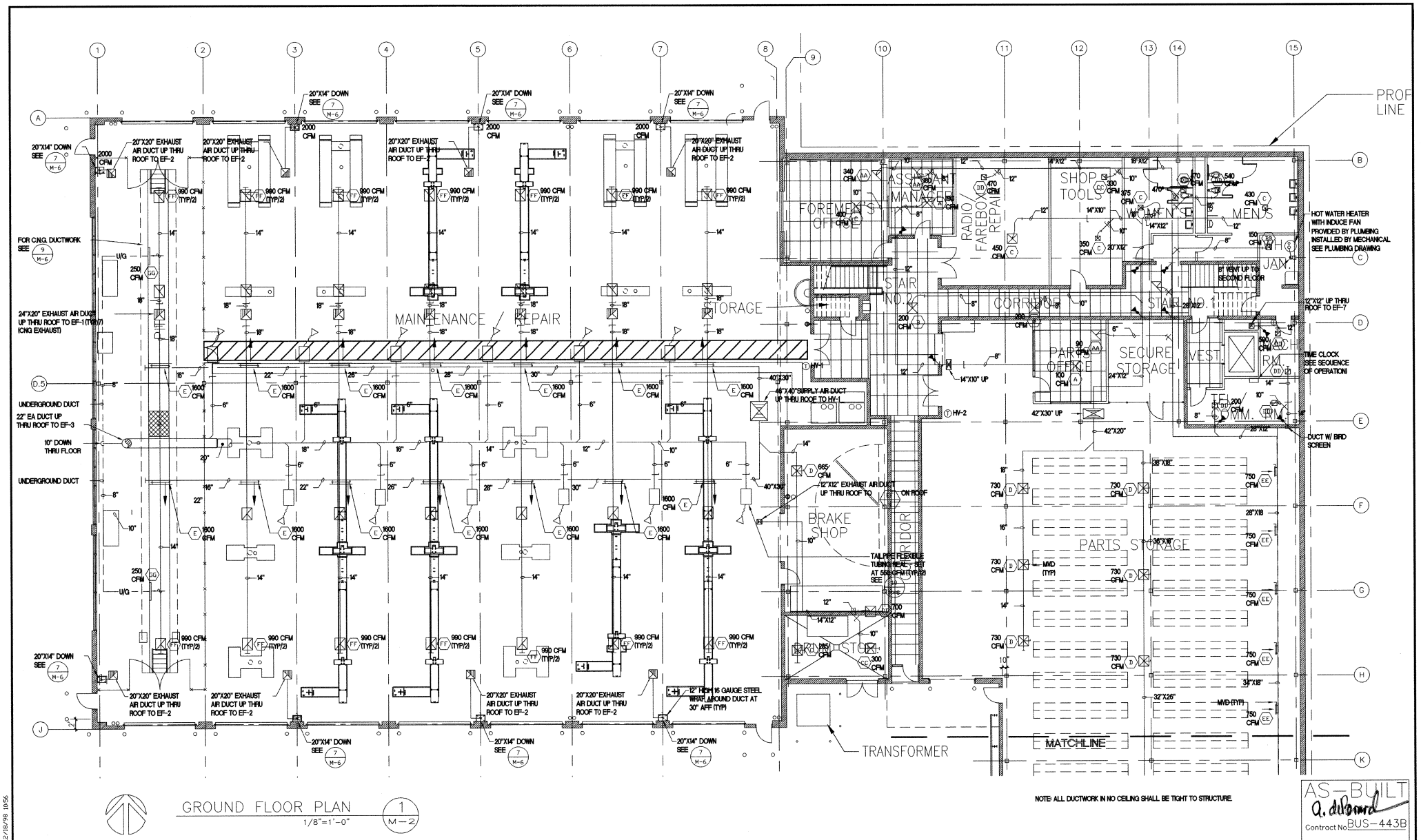

GROUND FLOOR PLAN 1/8"=1'-0" (1/M-2)

NOTE: ALL DUCTWORK IN NO CEILING SHALL BE TIGHT TO STRUCTURE.

AS-BUILT
A. deBoard
Contract No BUS-443B
Date NOV. 2000

CONSTRUCTION CHANGE TABLE		
CHANGE	DATE	SHEET NUMBERS REVISED OR ADDED THIS CHANGE

TMAD Engineers, Inc.
Mechanical and Electrical Consulting Engineers
Project Number 97087
TELEPHONE (619) 271-9808
FAX (619) 271-9932
9845 ERMA ROAD SUITE 200 SAN DIEGO, CA 92131

		DATE
DESIGNED BY	BM	12/18/98
DRAWN BY	TW	12/18/98
CHECKED BY	MK	12/18/98
MTDB PRJ. ENG.		

MTDB
Metropolitan Transit Development Board
1255 Imperial Avenue, Suite 1000, San Diego, Ca. 92101-7490 (619)231-1466

IMPERIAL AVENUE DIVISION
BUS MAINTENANCE FACILITY

MECHANICAL GROUND FLOOR PLANS

SCALE	1/8"=1'-0"
MTDB CONTRACT NO.	BUS-443B
DRAWING NO.	M-2
SHEET NO.	63

V:\97087\MFL\97MFP-LBVG 12/18/98 10:56

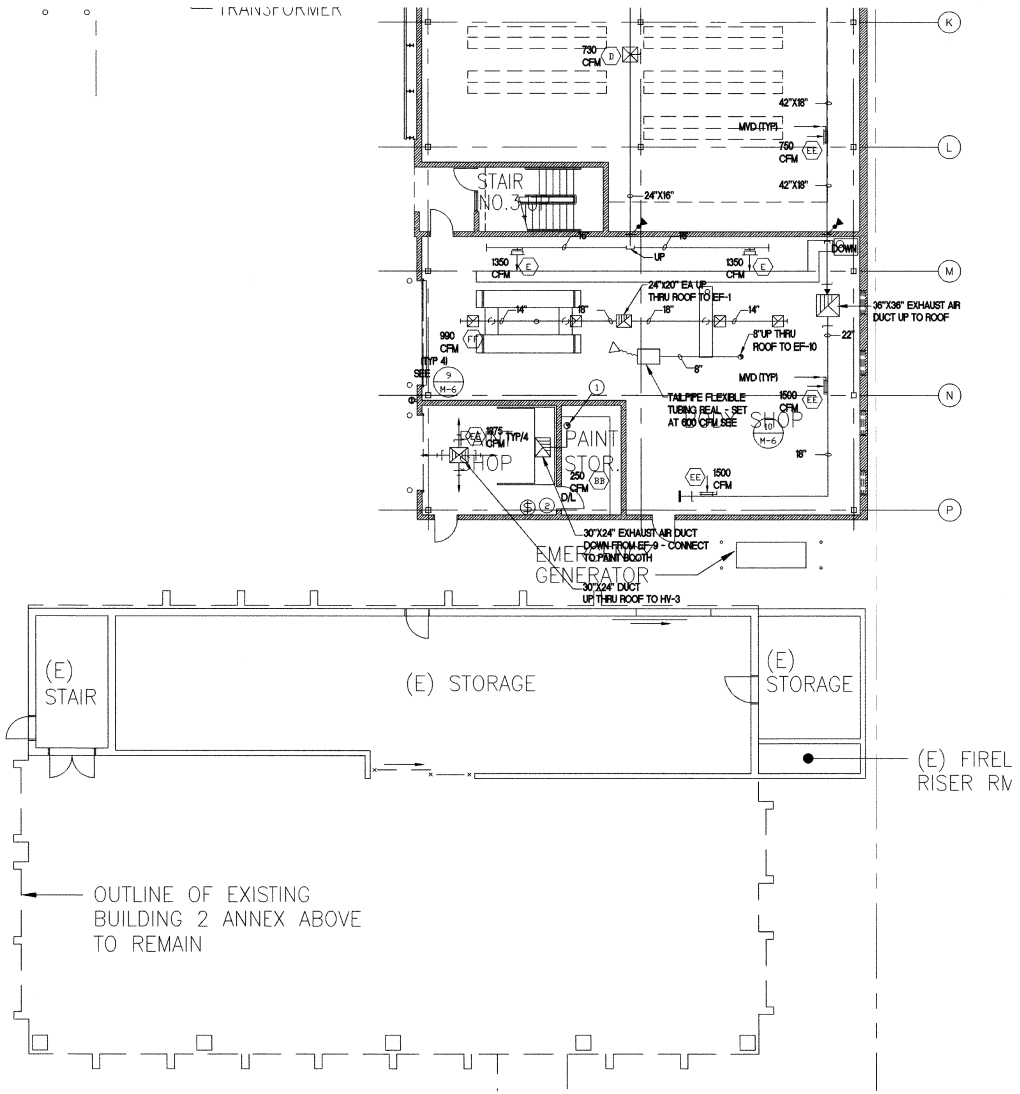

GROUND FLOOR PLAN
1/8"=1'-0"
1 / M-3

KEYNOTES

1. 10" DIA W/ BIRDSCREEN. TERMINATE AT 12" AFF.
2. MANUAL SWITCH WITH BREAKABLE GLASS AND LABEL "VENTILATION SYSTEM EMERGENCY SHUTOFF". SEE SEQUENCE OF OPERATION.

AS-BUILT
A. deStefano
Contract No BUS-443B
Date NOV. 2000

CONSTRUCTION CHANGE TABLE		
CHANGE	DATE	SHEET NUMBERS REVISED OR ADDED THIS CHANGE

TMAD Engineers, Inc.
Mechanical and Electrical Consulting Engineers
Project Number 97087
TELEPHONE (619) 271-9808
FAX: (619) 271-9832
9845 ERMA ROAD SUITE 200 SAN DIEGO, CA 92131

DESIGNED BY	BM	DATE 12/18/98
DRAWN BY	TW	12/18/98
CHECKED BY	MK	12/18/98
MTDB PRJ. ENG.		

MTDB
Metropolitan Transit Development Board
1255 Imperial Avenue, Suite 1000, San Diego, Ca. 92101-7490 (619)231-1466

IMPERIAL AVENUE DIVISION
BUS MAINTENANCE FACILITY

MECANICHAL GROUND FLOOR PLANS

SCALE	1/18"=1'-0"
MTDB CONTRACT NO.	BUS-443B
DRAWING NO.	M-3
SHEET NO.	64

X:\97087\MFE\787MFP-2.DWG 02/03/99 1:38PM

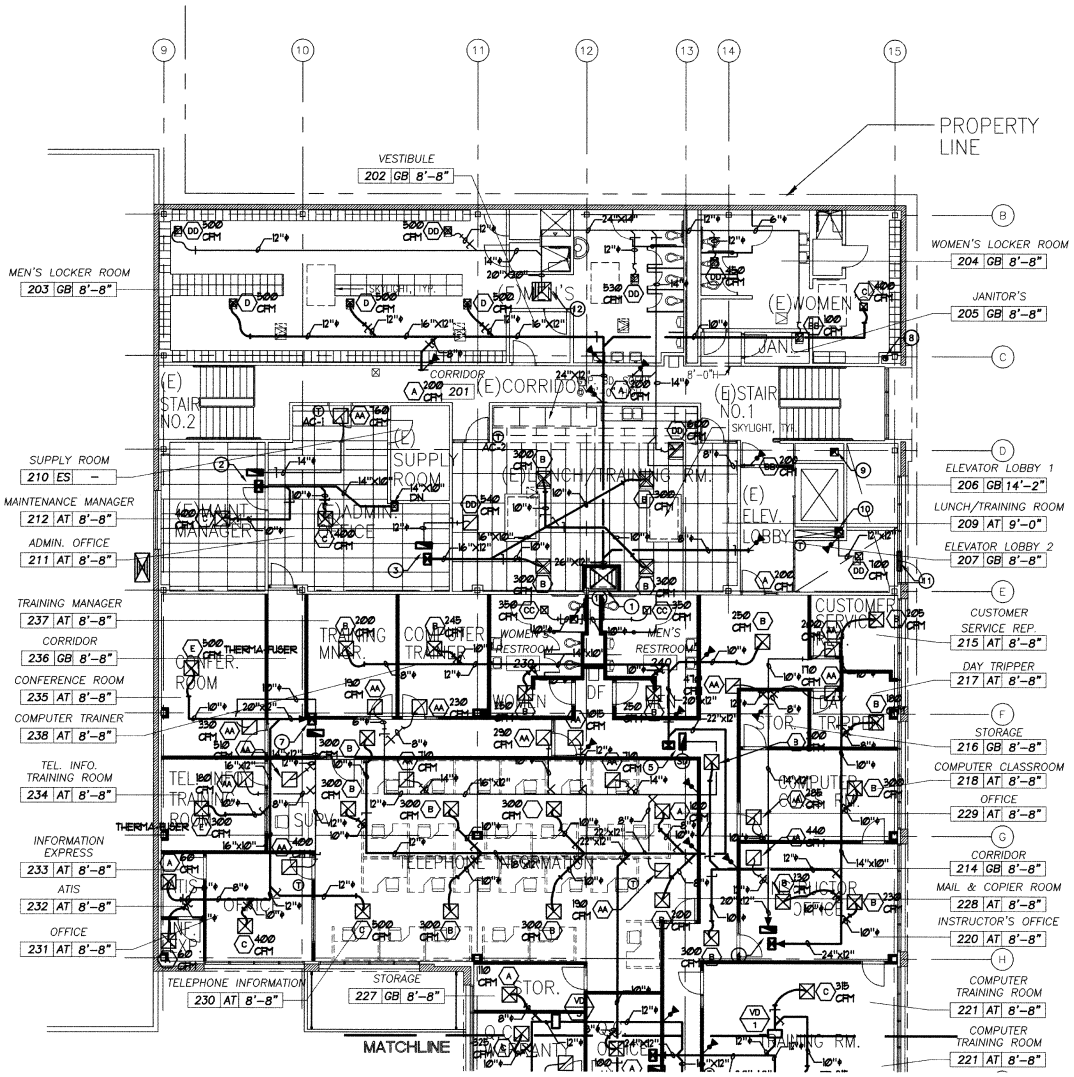

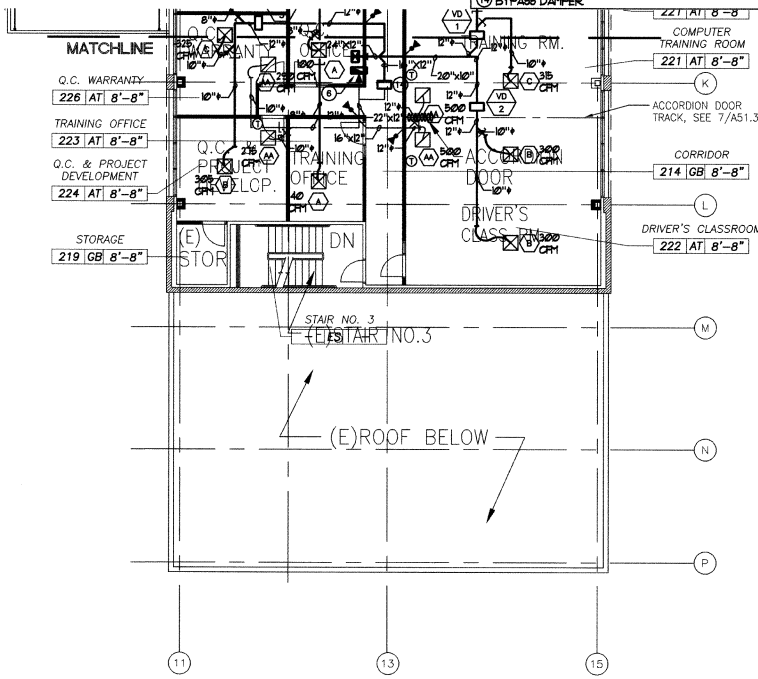

KEYNOTES

1. 42"x36" SUPPLY AIR DUCT UP THRU ROOF AND 42"x36" DOWN TO GROUND FLOOR.
2. 18"x12" SUPPLY AIR DUCT, 24"x10" RETURN AIR DUCT UP THRU ROOF TO AC-1.
3. 18"x12" SUPPLY AIR DUCT AND 24"x10" RETURN AIR DUCT UP THRU ROOF TO AC-2.
4. 36"x12" SUPPLY AIR DUCT AND 24"x14" RETURN AIR DUCT UP THRU ROOF TO AC-3, CAP FOR FUTURE.
5. 36"x12" SUPPLY AIR DUCT AND 24"x14" RETURN AIR DUCT UP THRU ROOF TO AC-4, CAP FOR FUTURE.
6. 18"x12" SUPPLY AIR DUCT AND 24"x10" RETURN AIR DUCT UP THRU ROOF TO AC-5, CAP FOR FUTURE.
7. 18"x12" SUPPLY AIR DUCT AND 24"x10" RETURN AIR DUCT UP THRU ROOF TO AC-6, CAP FOR FUTURE.
8. 8"ø VENT THRU ROOF.
9. 12"x12" EXHAUST AIR DUCT UP THRU ROOF.
10. 12"x12" EXHAUST AIR DUCT UP THRU ROOF.
11. WALL LOUVER, SEE ARCHITECTURAL DRAWINGS.
12. 20"x20" UP EXHAUST AIR DUCT UP THRU ROOF.
13. 12"x12" EXHAUST AIR DUCT UP THRU ROOF TO EF-11.
14. BYPASS DAMPER.

AS-BUILT
a. dittmann
Contract No BUS-443B
Date NOV. 2000

SECOND FLOOR REFLECTED CEILING PLAN
1/8"=1'-0"
1 / A13.2

TMAD Engineers, Inc.
Mechanical and Electrical Consulting Engineers
Project Number 2000.017
TELEPHONE (858) 271-8808
FAX: (858) 271-9932
9845 ERMA ROAD SUITE 200 SAN DIEGO, CA 92131
sandiego@tmadengineers.com

CONSTRUCTION CHANGE TABLE

CHANGE	DATE	SHEET NUMBERS REVISED OR ADDED THIS CHANGE
4	4/17/00	SECOND FLOOR INTERIOR IMPROVEMENTS

STV Incorporated
ENGINEERS/ARCHITECTS/PLANNERS/CONSTRUCTION MANAGERS
1055 WILSHIRE BOULEVARD, SUITE 1455
LOS ANGELES, CALIFORNIA 90017-2499

LICENSED ARCHITECT TIM SOO KIM C-24485 RENEWAL DATE STATE OF CALIFORNIA

		DATE
DESIGNED BY	BM	5/2/00
DRAWN BY	TW	5/2/00
CHECKED BY	BM	5/2/00
MTDB PRJ. ENG.		

MTDB
Metropolitan Transit Development Board
1255 Imperial Avenue, Suite 1000, San Diego, Ca. 92101-7490 (619)231-1466

IMPERIAL AVENUE DIVISION
BUS MAINTENANCE FACILITY

SECOND FLOOR
REFLECTED CEILING PLAN

SCALE	1/8"=1'-0"
MTDB CONTRACT NO.	BUS-443B
DRAWING NO.	M-4
SHEET NO.	65

Y:\2000\2100.017\MPE\017M-4.DWG 06/14/00 11:02AM

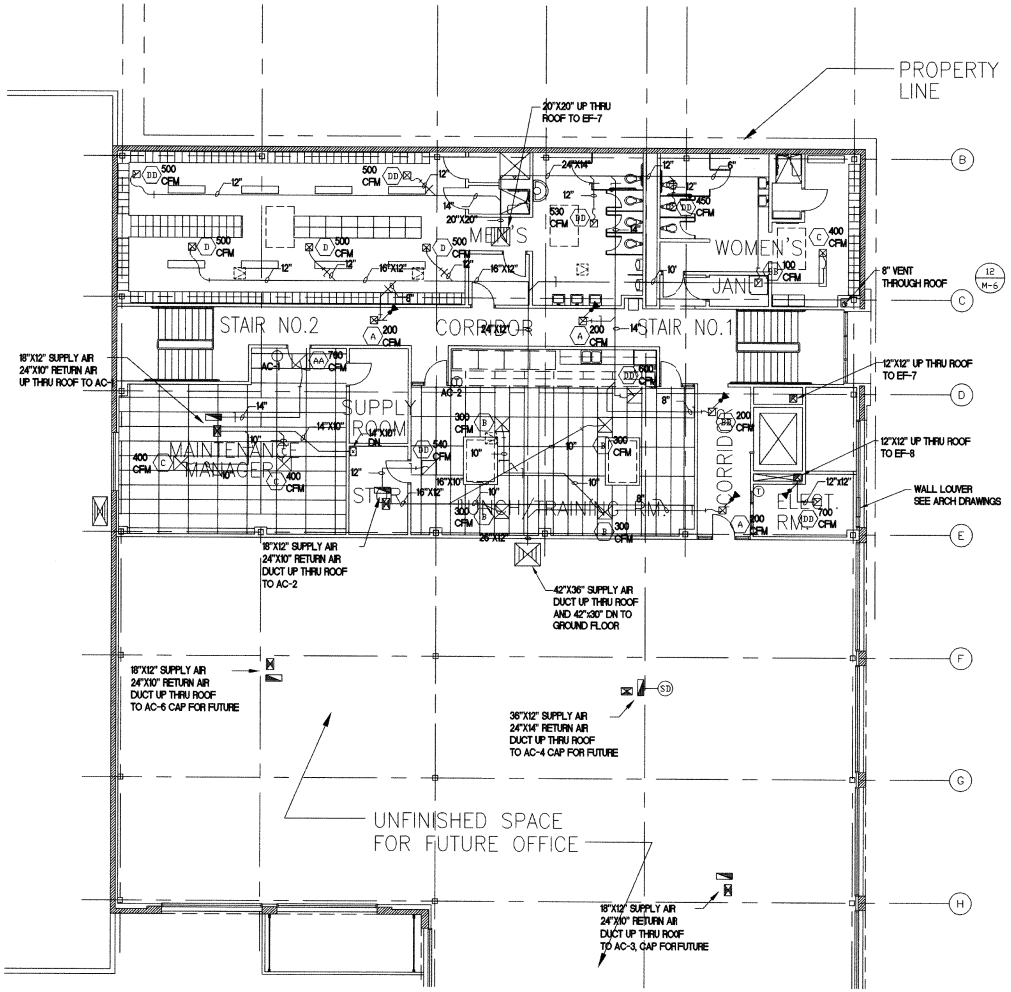

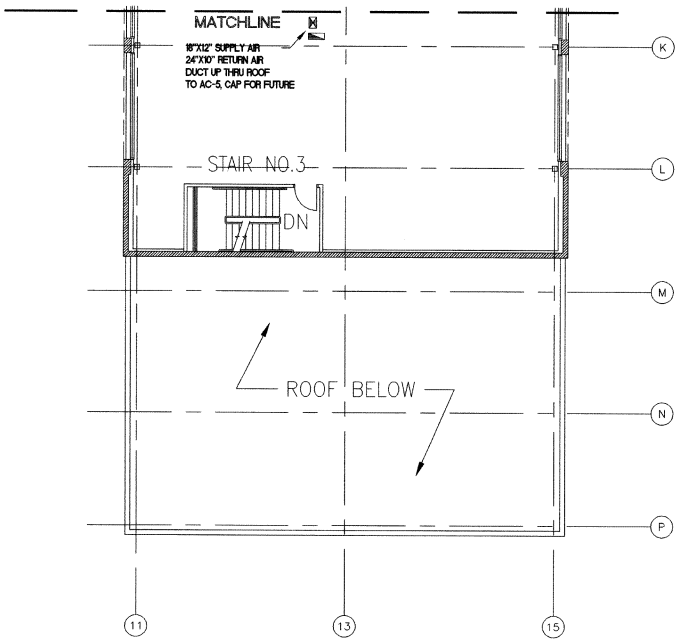

SECOND FLOOR PLAN – HVAC 1/8"=1'-0" (1 / M-4)

AS-BUILT
Contract No BUS-443B
Date NOV. 2000

CONSTRUCTION CHANGE TABLE		
CHANGE	DATE	SHEET NUMBERS REVISED OR ADDED THIS CHANGE

TMAD Engineers, Inc.
Mechanical and Electrical Consulting Engineers
Project Number 97087
TELEPHONE (619) 271-9808 FAX (619) 271-9932
9845 ERMA ROAD SUITE 300 SAN DIEGO, CA 92131

DESIGNED BY BM	DATE 12/18/98
DRAWN BY TW	12/18/98
CHECKED BY MK	12/18/98
MTDB PRJ. ENG.	

MTDB
Metropolitan Transit Development Board
1255 Imperial Avenue, Suite 1000, San Diego, Ca. 92101-7490 (619)231-1466

IMPERIAL AVENUE DIVISION
BUS MAINTENANCE FACILITY

MECHANICAL SECOND FLOOR PLANS

SCALE	1/16"=1'-0"
MTDB CONTRACT NO.	BUS-443B
DRAWING NO.	M-4
SHEET NO.	65

MDWG 96/12/10 DWG-3-M-4 \\MH\...\XX

KEYNOTES

1. MOUNT ON PLATFORM WITH VIBRATION ISOLATOR SEE DETAIL 6/M-6
2. FOR MOUNTING SEE DETAIL 3/M-6
3. FOR MOUNTING SEE DETAIL 4/M-6

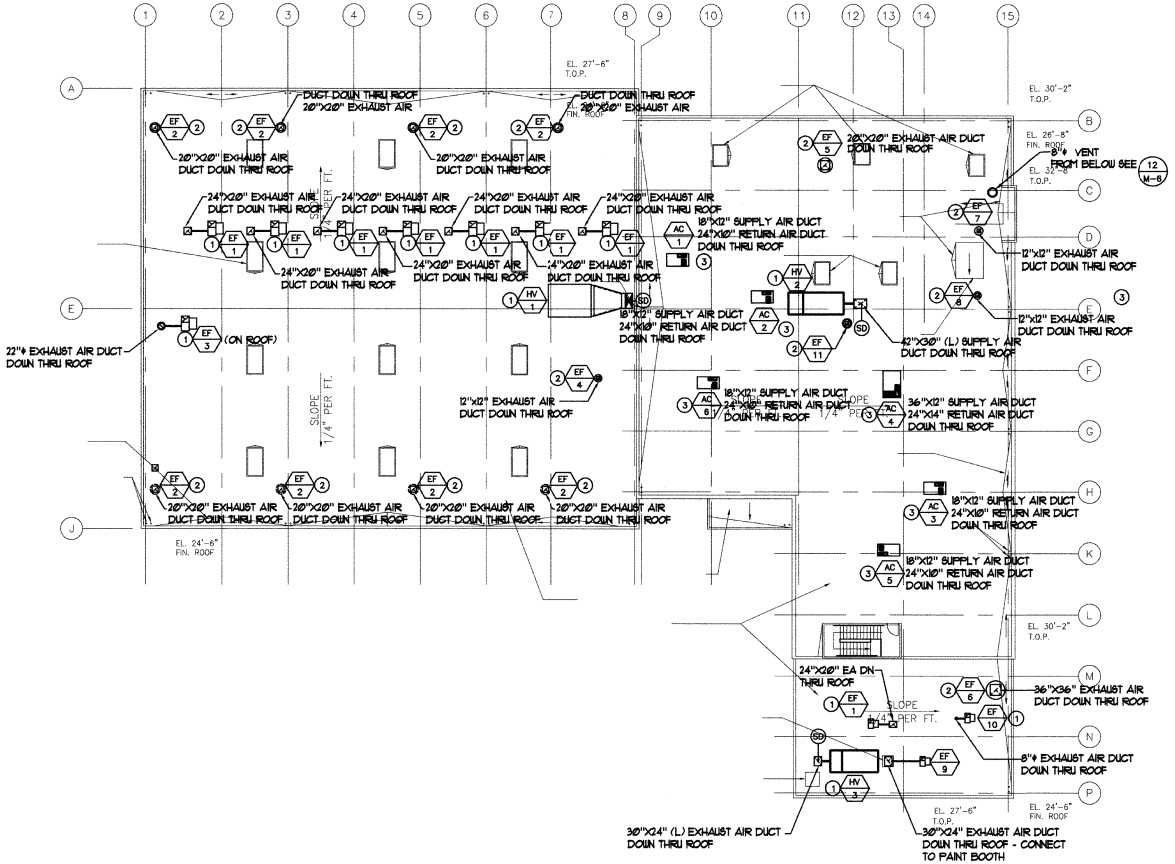

ROOF PLAN 1/M-5
1/16"=1'-0"

AS-BUILT
Q. deHerrera
Contract No BUS-443B
Date NOV. 2000

TMAD Engineers, Inc.
Mechanical and Electrical Consulting Engineers
Project Number 2000.017
TELEPHONE (858) 271-9808
FAX: (858) 271-9932
9845 ERMA ROAD SUITE 200 SAN DIEGO, CA 92131
sandiego@tmadengineers.com

CONSTRUCTION CHANGE TABLE

CHANGE	DATE	SHEET NUMBERS REVISED OR ADDED THIS CHANGE
4	4/17/00	SECOND FLOOR INTERIOR IMPROVEMENTS

STV Incorporated
ENGINEERS/ARCHITECTS/PLANNERS/CONSTRUCTION MANAGERS
1055 WILSHIRE BOULEVARD, SUITE 1455
LOS ANGELES, CALIFORNIA 90017-2499

LICENSED ARCHITECT TOM SOO YUM C-24485 RENEWAL DATE STATE OF CALIFORNIA

DESIGNED BY BM	DATE 5/2/00
DRAWN BY TW	5/2/00
CHECKED BY BM	5/2/00
MTDB PRJ. ENG.	

MTDB
Metropolitan Transit Development Board
1255 Imperial Avenue, Suite 1000, San Diego, Ca. 92101-7490 (619)231-1466

IMPERIAL AVENUE DIVISION BUS MAINTENANCE FACILITY

MECHANICAL ROOF PLAN

SCALE 1/8"=1'-0"
MTDB CONTRACT NO. BUS-443B
DRAWING NO. M-5
SHEET NO. 66

Y:\2000\2100.017\MPE\017M-5.DWG 06/14/00 10:53AM

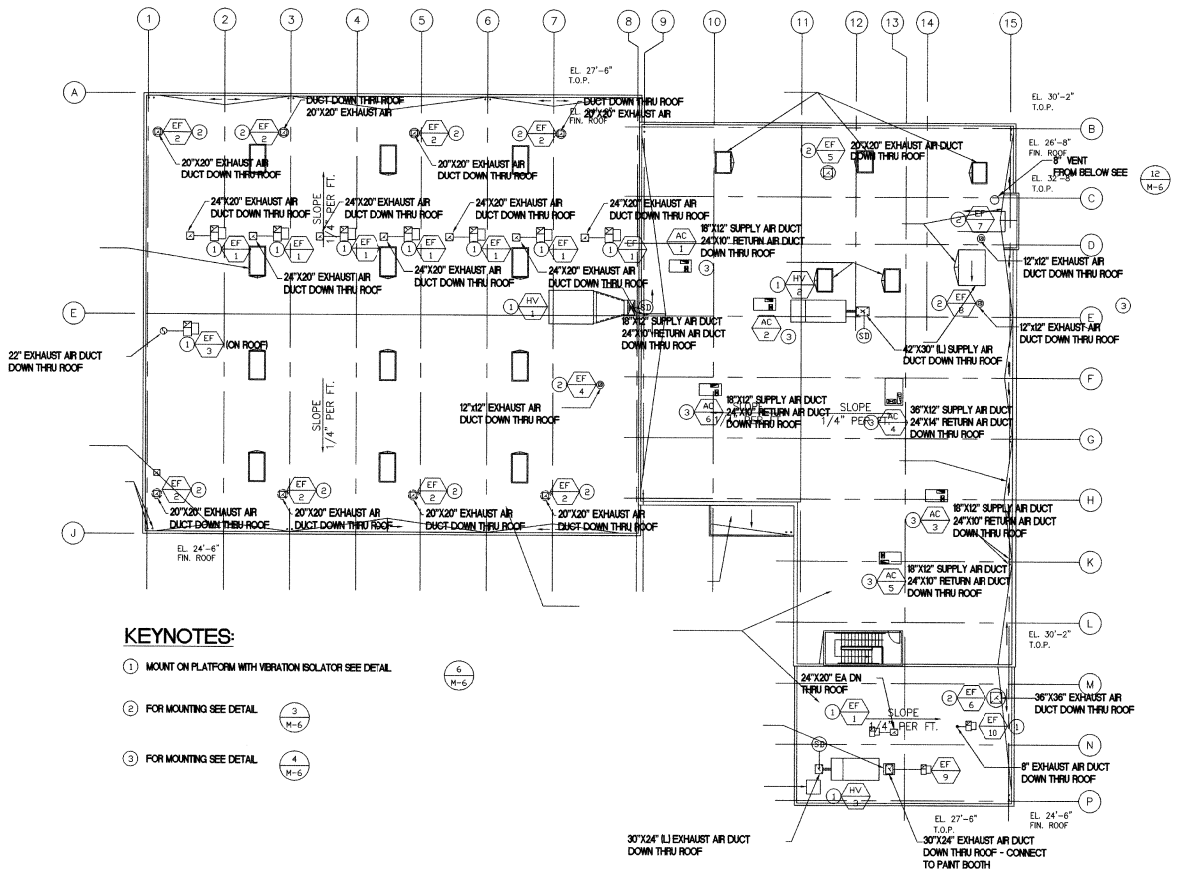

KEYNOTES:

1. MOUNT ON PLATFORM WITH VIBRATION ISOLATOR SEE DETAIL 6/M-6
2. FOR MOUNTING SEE DETAIL 3/M-6
3. FOR MOUNTING SEE DETAIL 4/M-6

ROOF PLAN 1/M-5
1/16"=1'-0"

AS-BUILT
Contract No. BUS-443B
Date NOV. 2000

CONSTRUCTION CHANGE TABLE		
CHANGE	DATE	SHEET NUMBERS REVISED OR ADDED THIS CHANGE

TMAD Engineers, Inc.
Mechanical and Electrical Consulting Engineers
Project Number 97087
TELEPHONE (619) 271-9808
FAX: (619) 271-9932
9845 ERMA ROAD SUITE 200 SAN DIEGO, CA 92131

DESIGNED BY	BM	DATE 12/18/98
DRAWN BY	TW	12/18/98
CHECKED BY	MK	12/18/98
MTDB PRJ. ENG.		

MTDB
Metropolitan Transit Development Board
1255 Imperial Avenue, Suite 1000, San Diego, Ca. 92101-7490 (619)231-1466

IMPERIAL AVENUE DIVISION
BUS MAINTENANCE FACILITY

MECHANICAL ROOF PLANS

SCALE 1/16"=1'-0"
MTDB CONTRACT NO. BUS-443B
DRAWING NO. M-5
SHEET NO. 66

MASTER SHEET 10/31/98 PLOTTED: 24-NOV-98 BY TAMAYO, ALEX

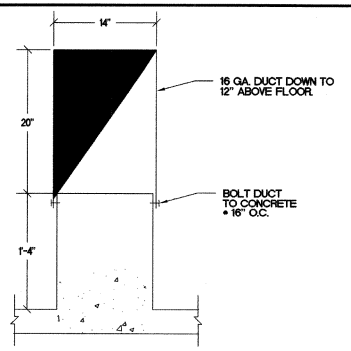

10 WALL PLAN VIEW
NO SCALE

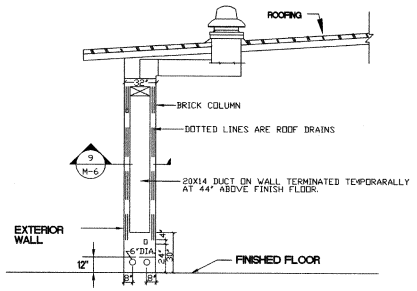

7 WALL SECTION
NO SCALE

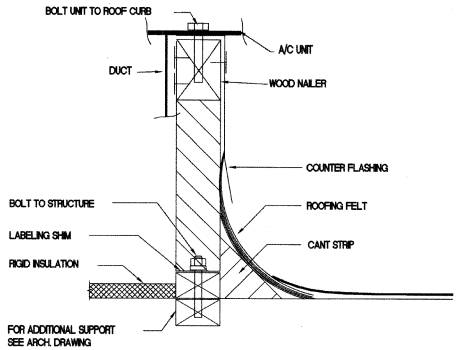

4 A/C UNIT MOUNTING
NO SCALE

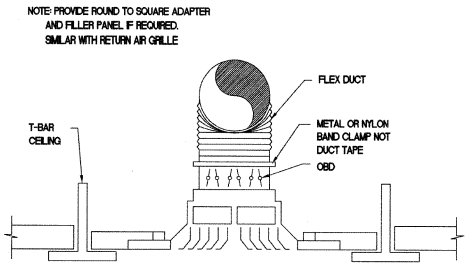

1 DIFFUSER MOUNTING
NO SCALE

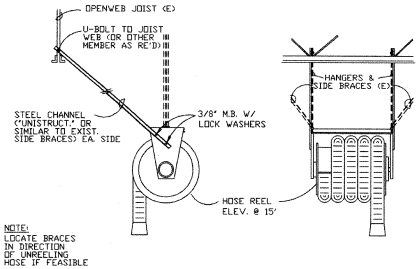

11 EXHAUST HOSE REEL BRACES
NO SCALE

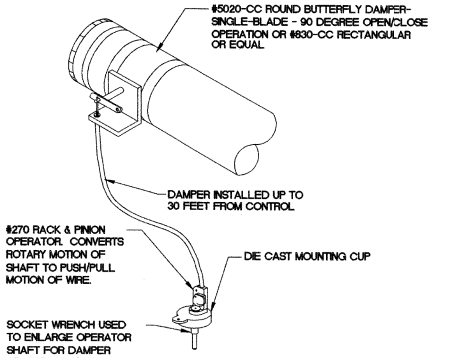

8 REMOTE VOLUME CONTROLLER
NO SCALE

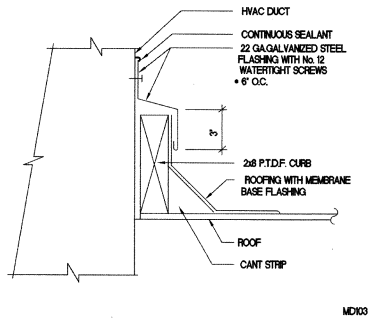

5 DUCT THRU ROOF
NO SCALE

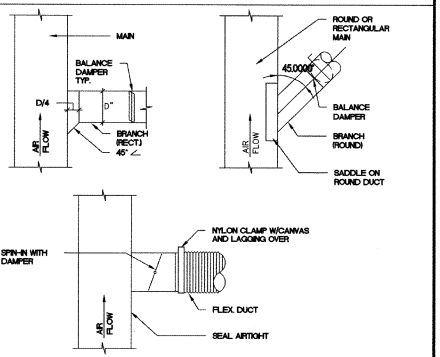

2 TYPICAL DUCT TAKEOFFS
NO SCALE

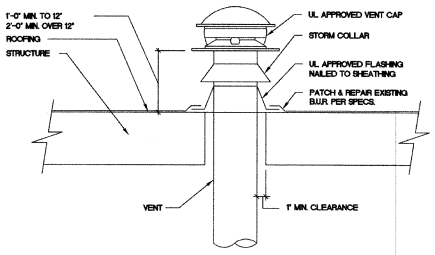

12 VENT THRU ROOF
NO SCALE

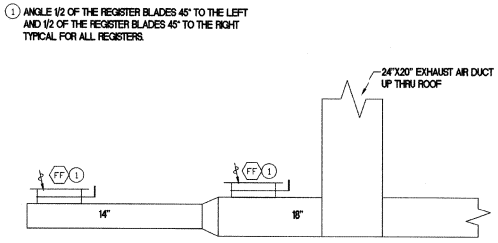

9 CNG EXHAUST SYSTEM
NO SCALE

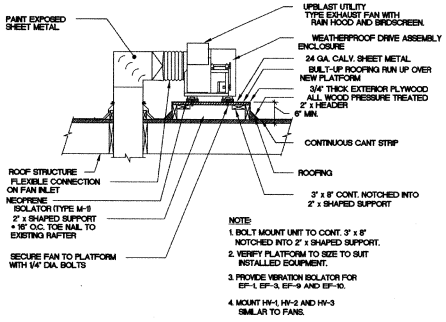

6 UTILITY EXHAUST FAN
NO SCALE

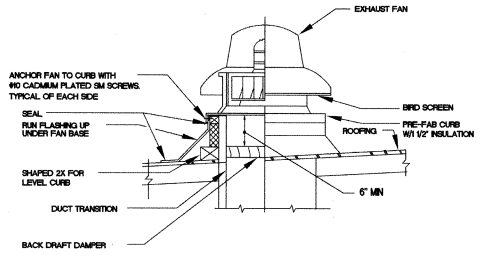

3 EXHAUST FAN MOUNTING
NO SCALE

AS-BUILT
A. Ustarroz
Contract No. BUS-443B
Date NOV. 2000

CONSTRUCTION CHANGE TABLE

CHANGE	DATE	SHEET NUMBERS REVISED OR ADDED THIS CHANGE

TMAD Engineers, Inc.
Mechanical and Electrical Consulting Engineers
Project Number 97087
TELEPHONE (619) 271-9808
FAX: (619) 271-9832
9645 ERMA ROAD SUITE 300 SAN DIEGO, CA 92131

DESIGNED BY	BM	DATE 12/18/98
DRAWN BY	TW	12/18/98
CHECKED BY	MK	12/18/98
MTDB PRJ. ENG.		

MTDB
Metropolitan Transit Development Board
1255 Imperial Avenue, Suite 1000, San Diego, Ca. 92101-7490 (619)231-1466

IMPERIAL AVENUE DIVISION
BUS MAINTENANCE FACILITY

MECHANICAL DETAILS

SCALE NONE
MTDB CONTRACT NO. BUS-443B
DRAWING NO. M-6
SHEET NO. 67

W:\97087\MPE\787MDET1.DWG 12/18/98 10:56

REGULATORY NOTES

FIRE PROTECTION SYSTEM

A. THE INSTALLATION OF THE FIRE SPRINKLER SYSTEM SHALL NOT COMMENCE UNTIL DETAILED PLANS, CALCULATIONS AND SPECIFICATIONS HAVE BEEN APPROVED BY THE LOCAL FIRE PREVENTION DIVISION.

B. THE DETAILED PLANS, CALCULATIONS AND SPECIFICATIONS SHALL BE STAMPED AND SIGNED BY THE ARCHITECT AND ENGINEER OF RECORD PRIOR TO SUBMITTAL TO THE LOCAL FIRE PREVENTION DIVISION.

CODE ANALYSIS

THE CONSTRUCTION OF THIS PROJECT SHALL CONFORM TO THE REQUIREMENTS OF:

A. UNIFORM BUILDING CODE - 1994 EDITION
B. UNIFORM PLUMBING CODE - 1994 EDITION
C. UNIFORM FIRE CODE - 1994 EDITION
D. AMERICANS WITH DISABILITIES ACT (ADA) TITLE II, 1990 EDITION.

SEISMIC RESTRAINTS

PIPING

A. SEISMIC BRACING AND ANCHORAGE OF FIRE SPRINKLER PLUMBING PIPING SHALL BE IN ACCORDANCE WITH THE "GUIDELINES FOR SEISMIC RESTRAINTS OF MECHANICAL SYSTEMS AND PLUMBING PIPING SYSTEMS," PUBLISHED BY SMACNA.

SERVICE WATER HEATING EQUIPMENT

A. WATER HEATERS AND STORAGE TANKS SHALL BE ANCHORED AND/OR STRAPPED TO RESIST HORIZONTAL DISPLACEMENT DUE TO EARTHQUAKE MOTION.

AREA SEPARATION PENETRATIONS

LOCATION AND RATING OF WALLS, ARE IDENTIFIED ON ARCHITECTURAL FLOOR PLANS.

FIXTURES

A. FIXTURE CONNECTIONS TO THE AREA SEPARATION WALL SURFACES OR THE SECTION PASSING THROUGH THE WALL SHALL ONLY BE OF METAL.

PIPING

A. WHERE PIPING PENETRATES THE AREA SEPARATION WALL, FLOOR OR ROOF SURFACE THE SECTION PASSING THROUGH THE WALL SHALL BE ONLY OF METAL.

B. PENETRATIONS OF RATED ASSEMBLIES SHALL INCLUDE UL THROUGH-PENETRATION FIRE STOP DEVICES AND OR [FIRE STOP] SYSTEM ADDITIONAL REQUIREMENTS AS FOLLOWS:

1. THROUGH-PENETRATION FIRE STOP DEVICES:

PIPING MAT.	PENETRATION TYPE	ASSEMBLY TYPE	HR RATING SYSTEM	UL SYS#
CAST IRON	FLOOR	CONC. MTL. DECK	3/3	CAJ1146
COPPER	FLOOR	CONC. MTL. DECK	3/0	CAJ1106
COPPER	WALL	FRAMED	2/0	WL1036

A) FIRE STOPPING DEVICES SHALL BE COMPLETE FACTORY BUILT PRODUCTS

MANUFACTURER	UL FILE #	CSFM LISTING #
PROSET SYSTEMS	R10336(N)	N/A

2. THROUGH-PENETRATION FIRE STOP SYSTEMS:

PIPING MAT.	PENETRATION TYPE	ASSEMBLY TYPE	HR RATING SYSTEM	UL SYS#
CAST IRON	FLOOR	CONC. MTL. DECK	3/0	CAJ1001
COPPER	FLOOR	CONC. MTL. DECK	3/0	CAJ1001
COPPER INSUL.	FLOOR	MTL. DECK	3/1	CAJ5001
COPPER	WALL	FRAMED	2/0	WL1001
COPPER INSUL.	WALL	FRAMED	2/1-1/2	WL5001

A) FIRE STOPPING SHALL BE UL LISTED CAULK FILL MATERIAL.

MANUFACTURER	UL FILE #	CSFM LISTING #
MINNESOTA MINING & MFG.	R9700(N)	04485-0941-01-106

C. FIRE STOPPING DEVICES AND MATERIALS SHALL BE APPLIED PER MANUFACTURERS WRITTEN INSTALLATION INSTRUCTIONS.

D. FIRE RATING SHALL BE EQUAL TO AREA SEPARATION RATING.

MANDATORY CONSERVATION MEASURES

WATER

A. WATER CLOSETS SHALL BE WATER CONSERVING 1.6 GALLONS PER FLUSH TYPE.

B. URINALS SHALL BE WATER CONSERVING 1.0 GALLON PER FLUSH TYPE.

C. LAVATORY, SINK FITTINGS AND SHOWER ASSEMBLIES SHALL BE LISTED AS "APPROVED" BY THE CALIFORNIA ENERGY COMMISSION.
1. FITTINGS AND SHOWER HEADS SHALL INCLUDE INTEGRAL FLOW RESTRICTING DEVICES TO LIMIT FLOW AS FOLLOWS:
A) FITTINGS - 2.2 GPM MAXIMUM
B) SHOWER HEADS - 2.5 GPM MAXIMUM

D. PUBLIC LAVATORY FITTINGS SHALL BE SELF CLOSING TYPE.

ENERGY

A. SERVICE WATER HEATING EQUIPMENT AND DOMESTIC HOT WATER PIPING INSULATION SHALL BE LISTED AS "APPROVED" BY THE CALIFORNIA ENERGY COMMISSION.

B. SERVICE WATER HEATING SYSTEM PIPING DOMESTIC HOT WATER SHALL BE INSULATED CONSISTENT WITH THE REQUIREMENTS OF THE CALIFORNIA ENERGY COMMISSION - ENERGY EFFICIENCY STANDARDS SECTIONS 118 AND 123.

C. SERVICE WATER HEATING EQUIPMENT SHALL INCLUDE AUTOMATIC TEMPERATURE CONTROLS CAPABLE OF ADJUSTMENT FROM THE LOWEST TO THE HIGHEST ACCEPTABLE TEMPERATURE SETTINGS FOR THE INTENDED USE AS LISTED IN TABLE 3, CHAPTER 44 OF THE 1991 ASHRAE HANDBOOK, HVAC SYSTEMS AND APPLICATIONS.

D. SERVICE WATER HEATING RECIRCULATION PUMP SHALL INCLUDE TIME CLOCK AND OR AQUA-STAT CONTROL CAPABLE OF AUTOMATICALLY TURNING OFF THE CIRCULATING PUMP WHEN HOT WATER IS NOT REQUIRED.

MANDATORY ACCESSIBILITY MEASURES

FIXTURES

A. ACCESSIBLE PLUMBING FIXTURES SHALL BE INSTALLED IN STRICT ACCORDANCE WITH CALIFORNIA PLUMBING CODE, 1994 EDITION, CHAPTER 15, PLUMBING REQUIREMENTS FOR THE DESIGN SAFETY FOR ACCESSIBILITY.

FITTINGS AND TRIM

A. EXPOSED P-TRAP ASSEMBLY AND HOT & COLD WATER SUPPLIES SHALL BE COVERED FOR SAFETY.

B. THE FORCE REQUIRED TO OPERATE LAVATORY OR SINK FAUCETS SHALL BE NO GREATER THAN 5 LBS. SELF CLOSING FAUCETS SHALL HAVE MINIMUM 10 SECOND CYCLE TIME.

CROSS CONNECTION CONTROL MEASURES

PUBLIC WATER SYSTEM

A. PUBLIC WATER SYSTEM SHALL BE PROTECTED BY AN APPROVED REDUCED PRESSURE PRINCIPLE BACKFLOW PREVENTION DEVICE.

MECHANICAL EQUIPMENT

A. MAKE-UP WATER SUPPLIES TO MECHANICAL EQUIPMENT SHALL BE PROTECTED BY AN APPROVED BACKFLOW PREVENTION DEVICE.

FIRE RESISTIVE BUILDING MATERIALS

PIPING INSULATION

A. INSULATION, INSULATION JACKETS, ADHESIVES, TAPES, ETC SHALL HAVE A FLAME SPREAD CLASSIFICATION NOT TO EXCEED 25 AND A SMOKE DEVELOPED RATING OF NOT MORE THAN 50 PER UBC STANDARD 8-1 AND AS TESTED BY UNDERWRITERS LABORATORIES.

MFR	UL FILE #	CSFM #
CERTAINTEED CORP	R6152(N)	2550-0185
MANVILLE SALES	R5760(N)	2550-1014100

B. INSULATION, INSULATION JACKET, ADHESIVES, TAPES, ETC. SHALL BE APPLIED PER MANUFACTURERS WRITTEN INSTALLATION INSTRUCTIONS.

THERMAL EXPANSION CONTROL

WATER DISTRIBUTION SYSTEM

A. SERVICE WATER HEATING EQUIPMENT INSTALLATIONS WHICH INCLUDE STORAGE TANKS SHALL INCLUDE AN APPROVED LISTED EXPANSION TANK OR OTHER DEVICE DESIGNED FOR INTERMITTENT OPERATION FOR THERMAL EXPANSION CONTROL. INSTALLATION SHALL CONFORM TO THE REQUIREMENTS OF SECTION 608.3 UPC 1994 EDITION.

PROJECT NOTES

GENERAL

A. VERIFY ALL DIMENSIONS, ELEVATIONS AND SITE CONDITIONS PRIOR TO THE COMMENCEMENT OF ANY WORK. IN THE EVENT OF ANY DISCREPANCIES THE ARCHITECT SHALL BE IMMEDIATELY NOTIFIED IN WRITING. IN NO CASE SHALL DIMENSIONS BE SCALED FROM THE PLANS, SECTIONS, ELEVATIONS OR DETAILS ON THE PLUMBING DRAWINGS.

B. ALL OMISSIONS AND OR CONFLICTS BETWEEN THE VARIOUS ELEMENTS OF THE CONSTRUCTION DOCUMENTS SHALL BE BROUGHT TO THE ATTENTION OF AND RESOLVED WITH THE ARCHITECT PRIOR TO PROCEEDING WITH ANY OF THE AFFECTED WORK.

C. ALL MATERIALS AND WORKMANSHIP SHALL CONFORM TO THE REQUIREMENTS OF UBC AND UPC.

D. THE PLUMBING CONSTRUCTION DOCUMENTS REPRESENT THE PLUMBING AND PIPING SYSTEMS, NOT THE METHOD OF CONSTRUCTION. THE CONTRACTOR SHALL BE RESPONSIBLE FOR ALL LABOR, MATERIALS, EQUIPMENT AND ACCESSORIES NECESSARY TO ACHIEVE THE FINISHED SYSTEMS.

STRUCTURAL ELEMENTS

A. NO PIPES, SLEEVES, ETC SHALL BE PLACED IN SLABS, BEAMS OR WALLS UNLESS SPECIFICALLY SHOWN OR NOTED, NOR SHALL ANY STRUCTURAL MEMBER BE CUT FOR PIPES.

B. FOR UNDERGROUND PIPING ROUTED AT OR NEAR FOOTINGS OR GRADE BEAMS - SEE STRUCTURAL DRAWINGS FOR DETAILS.

ELECTRICAL POWER CONNECTIONS

A. FIELD VERIFY AND COORDINATE WITH ELECTRICAL SYSTEMS INSTALLER EXACT ELECTRICAL REQUIREMENTS OF ALL FIRE PROTECTION, PLUMBING PRODUCTS REQUIRING POWER.

B. CONFIRM ELECTRICAL VOLTAGES AND LOADS WITH AVAILABLE VOLTAGES AND LOADS IN ORDER TO ENSURE THAT CAN BE CONNECTED.

C. ELECTRICAL POWER CONNECTIONS SHALL BE MADE BY ELECTRICAL SYSTEMS INSTALLER UNDER PROVISIONS OF DIVISION 16.

EXISTING SITE CONDITIONS

SITE UNDERGROUND STRUCTURES AND UTILITIES

A. THE EXISTENCE AND LOCATION OF EXISTING UNDERGROUND STRUCTURES AND UTILITIES SHOWN ON THE CONSTRUCTION DRAWINGS IS BASED ON EXISTING CONSTRUCTION DOCUMENTS.

B. ATTENTION IS CALLED TO THE POSSIBLE EXISTING OF OTHER UNDERGROUND STRUCTURES AND/OR UTILITIES NOT KNOWN OR IN A LOCATION DIFFERENT FROM THAT SHOWN ON THE CONSTRUCTION DRAWINGS.

C. PRECAUTIONARY MEASURES HALL BE TAKEN TO PROTECT FROM DAMAGE UNDERGROUND STRUCTURES UTILITIES SHOWN ON THE CONSTRUCTION DRAWINGS AND ANY OTHER UNDERGROUND STRUCTURES AND UTILITIES NOT SHOWN.

D. DAMAGED UNDERGROUND STRUCTURES AND OR UTILITIES SHALL BE REPAIRED AT NO EXPENSE TO THE OWNER.

BUILDING SERVICE CONNECTIONS

A. LOCATION AND ELEVATION OF EXISTING BUILDING SEWER, STORM DRAIN AND WATER SERVICE SHALL BE CONFIRMED BY FIELD MEASUREMENTS AND EXPLORATORY EXCAVATION PRIOR TO THE COMMENCEMENT OF ANY UNDERGROUND PLUMBING WORK.

B. ALL NEW BUILDING SEWER AND STORM DRAIN LINES SHALL BE THOROUGHLY FLUSHED OF AL FOREIGN MATERIALS PRIOR TO CONNECTION TO THE EXISTING SITE SEWER AND STORM DRAIN SYSTEM.

GENERAL NOTES

1. WATER HAMMER ARRESTERS SHALL BE LOCATED, SIZED AND CERTIFIED ACCORDING TO PDI-WH-201 STANDARD.
2. ALL VENTS THROUGH ROOF SHALL BE METAL TYPE.
3. STOP VALVES SHALL BE PROVIDED AT ALL FIXTURES TO ENABLE REGULATION OF FLOW AND SHUT DOWN OF SUPPLY TO FIXTURES.
4. GALVANIZED PIPE AND FITTING SHALL BE USED FOR GAS PIPING WHICH IS EXPOSED TO THE WEATHER.
5. PENETRATIONS OF PIPES, CONDUITS, ETC IN WALLS, FLOORS OR CEILING ASSEMBLIES REQUIRING PROTECTED OPENINGS SHALL BE A TESTED ASSEMBLY.
6. LABEL MEDIUM PRESSURE GAS EVERY FIVE FEET.

PIPE SIZE SCHEDULE

SIZE	GPM	FT. F.U.	FV F.U.
1/2"	2	---	---
3/4"	4	4	---
1"	12	16	---
1-1/4"	20	30	5
1-1/2"	32	58	15
2"	55	151	60

PIPING SIZE FROM CHARTS A-3 AND A-4, 1994 UPC BASED ON 4 PSI/ 100 FT. MAXIMUM ALLOWABLE PRESSURE DROP AT MAXIMUM VELOCITY OF 6 FPS.

LEGEND

SYMBOL	ABBREV.	DESCRIPTION
	S, SD OR W	SOIL, STORM OR WASTE BELOW GRADE
	S, SD, OD, OR W	SOIL, STORM, OVERFLOW, OR WASTE ABOVE FLOOR
	VT	SANITARY VENT
	C.W.	COLD WATER
	H.W.	HOT WATER
CD	C.D.	CONDENSATE DRAIN
	S.O.V.	SHUT OFF VALVE/ISOLATION
	C.V.	CHECK VALVE
	F.C.O.	FLOOR CLEANOUT
	W.C.O.	WALL CLEANOUT
	H.B.	HOSE-BIBB
		PIPE-UP
		PIPE-DOWN
		UNION
	P.O.C.	POINT OF CONNECTION
		DETAIL & SHEET NUMBERS
	ABV.	ABOVE
	BEL.	BELOW
	CLG.	CEILING
	FIN.	FINISH
	FLR.	FLOOR
	GR.	GRADE
	I.E.	INVERT ELEVATION
	TYP.	TYPICAL
	V.T.R.	VENT THROUGH ROOF
G		GAS PIPING
	HWR	HOT WATER RETURN
FS	FS	FIRE SERVICE
	FD	FLOOR DRAIN
D		DRAIN
		BACKFLOW PREVENTER
CNG-OIL	CNG-OIL	COMPRESSED NATURAL GAS ENGINE OIL
40WT OIL	40WT OIL	40 WEIGHT OIL PIPING
ATF	ATF	AUTOMATIC TRANSMISSION FLUID PIPING
CA	CA	COMPRESSED AIR
LUBE	LUBE	LUBE
COOLANT	COOLANT	COOLANT
MPG	MPG	MEDIUM PRESSURE GAS
DIFF-OIL	DIFF-OIL	DIFFERENTIAL OIL

WATER CALCULATION

PRESSURE ANALYSIS

FIXTURE UNITS (F.U.) / F.V.(U)	198 FV
DEMAND FLOW (G.P.M.)	92
DEVELOPED LENGTH (FT.)	182
NOTE: FROM 5'-0" OUTSIDE OF BUILDING OR REGULATOR	
PRESSURE LOSSES	
(A) ELEVATION 0.43 X __ FT.	7
(B) RESIDUAL	35
PRESSURE REGULATOR: __YES/X__ NO	
MINIMUM MAIN SUPPLY PRESSURE (P.S.I.)	66
REGULATED PRESSURE (P.S.I.)	50
PRESSURE AVAILABLE (P.S.I.)	9
CALCULATED ALLOWABLE DROP	
__ P.S.I. X 100 / ___ FT. (DEVELOPED LENGTH) __ P.S.I. / 100 FT.	44
MAXIMUM ALLOWABLE DROP (LBS./100 FT.)	4

AS-BUILT
A. Gilbreath
Contract No. BUS-443B
Date NOV. 2000

CONSTRUCTION CHANGE TABLE

CHANGE	DATE	SHEET NUMBERS REVISED OR ADDED THIS CHANGE

TMAD Engineers, Inc.
Mechanical and Electrical Consulting Engineers
Project Number 97087
TELEPHONE (619) 271-9808
FAX: (619) 271-9932
9845 ERMA ROAD SUITE 200 SAN DIEGO, CA 92131

DESIGNED BY	MS	DATE 12/18/98
DRAWN BY	EB/TW	12/18/98
CHECKED BY	MK	12/18/98
MTDB PRJ. ENG.		

MTDB
Metropolitan Transit Development Board
1255 Imperial Avenue, Suite 1000, San Diego, Ca. 92101-7490 (619)231-1466

IMPERIAL AVENUE DIVISION
BUS MAINTENANCE FACILITY

PLUMBING LEGEND, REGULATORY, GENERAL, PROJECT, NOTES.

SCALE NONE
MTDB CONTRACT NO. BUS-443B
DRAWING NO. P-1
SHEET NO. 68

W:\97087\MPE\787PNTS1.DWG 12/18/98 10:58

FIXTURE

MARK	DESCRIPTION	MOUNTING	MIN. ROUGH-IN/CONN. W	V	HW	CW	TRAP	BASED ON MANUFACTURER & MODEL NO. FIXTURE	SUPPORT	FLUSH VALVE/FITTING	REMARKS
WC 1	WATER CLOSET	WALL	4"	2"	-	1-1/2"	INT.	AMERICAN STANDARD 2257.103 AFWALL EL 1.6	JAY R SMITH 210/230	SLOAN #111	(10) 1.6 GAL./FLUSH
WC 1H	WATER CLOSET (HANDICAPPED)	WALL	4"	2"	---	1-1/2"	INT	AMERICAN STANDARD 2257.103 AFWALL EL 1.6	JAY R SMITH 210/230	SLOAN #111	(4)(6)(10) 1.6 GAL./FLUSH
UR 1	URINAL	WALL	2"	2"	---	3/4"	INT.	AMERICAN STANDARD 6541.532 ALLBROOK 1.0	JAY R. SMITH 637	SLOAN 186-1	1.0 GAL./FLUSH
UR 1H	URINAL (HANDICAPPED)	WALL	2"	2"	---	3/4"	INT.	AMERICAN STANDARD 6541.532 ALLBROOK 1.0	JAY R. SMITH 637	SLOAN 186-1	1.0 GAL./FLUSH
LV 1H	LAVATORY (HANDICAPPED) PUBLIC	WALL	2"	1-1/2"	1/2"	1/2"	1-1/4" X 1-1/2"	AMERICAN STANDARD 0355.012 LUCERNE	JAY R. SMITH 700	SYMMONS S-60-H	(1)(2)(5)(7)(8)
EWC 1H	ELECTRIC WATER COOLER	WALL	2"	1-1/2"	---	1/2"	INT	SUNROC NWCA-8	MOUNTING PLATE	---	(9)(11)
S 1	SEMI CIRCULAR	FLOOR	2"	1-1/2"	1/2"	1/2"	1-1/4" X 1-1/2"	ACORN 3413-DC-FG-MXT-SPX	---	---	3 STATION MULTI-LAV
S 2	SEMI CIRCULAR	FLOOR	2"	1-1/2"	1/2"	1/2"	1-1/4" X 1-1/2"	ACORN 3434-ADA-H-FG-SPX	---	---	4 STATION MULTI-LAV
SS 1	SERVICE SINK	FLOOR	3"	2"	1/2"	1/2"	3"	AMERICAN STANDARD FLORWELL 7741.000	---	AMERICAN STANDARD 8344.111 & 7796.176	
KS 1	KITCHEN SINK (DBL. COMP)	WALL	2"	1-1/2"	1/2"	1/2"	1-1/4" X 1-1/2"	"JUST" VDL-1933-B-GR	---	"CHICAGO" 786-RC JUST J-35FS	
ES 1	EMERGENCY EYEWASH AND SAFETY SHOWER	FLOOR	2"	1-1/2"	-	1-1/4"	1-1/4" X 1-1/2"	GUARDIAN EQUIPMENT G8F-1909	---	---	
ES 2	EMERGENCY EYEWASH	WALL	2"	1-1/2"	-	1/2"	1-1/4" X 1-1/2"	GUARDIAN EQUIPMENT G8F-1721	INCLUDE STAINLESS STEEL BRACKET	---	
SH 1	SHOWER	FLOOR/WALL	2"	1-1/2"	1/2"	1/2"	2"	PRE-FAB SHOWER UNIT SPECIFIED BY ARCHITECT	---	SYMMONS S-96-1-131-X	
SH 1H	SHOWER HANDICAPPED	FLOOR/WALL	2"	1-1/2"	1/2"	1/2"	2"	PRE-FAB SHOWER UNIT SPECIFIED BY ARCHITECT	---	SYMMONS S-96-300-B24-X-V-L	

GAS FIRED WATER HEATER

MARK	DESCRIPTION	LOCATION	SERVICE	STORAGE CAPACITY	RECOVERY GAL/HR	GAS TYPE	BTUH INPUT	FLUE SIZE	CONNECTIONS INLET	OUTLET	GAS	OPERATING WEIGHT	BASED ON MANUFACTURER & MODEL	REMARKS
VH 1	TANK TYPE POWER VENTED	JAN. ROOM	DOMESTIC WATER	65 GAL.	606 * 100° F	NATURAL	625,000	8"	1-1/2"	1-1/2"	1"	1195 LBS	LOCHINVAR CMR-625-045-DP9 TJERNLUND IPS 1505 WITH 95-1016 RELAY	PROVIDE ARMSTRONG MODEL 30 EXPANSION TANK (4.4 GALLONS) 120 VOLTS REQUIRED BAROMETRIC DRAFT INDUCER (IN-LINE)

SPECIALTIES

MARK	DESCRIPTION	MIN.ROUGH-IN/CONN. W	V	HW	CW	OTHER	TRAP	BASED ON MANUFACTURER & MODEL	REMARKS
HB 1	HOSE BIBB	---	---	---	3/4"	---	---	ACORN 8121	HOSE BIBB WITH VACUUM BREAKER
FD 1	FLOOR DRAIN	2"	2"	---	---	VIA LAVATORY	2"	JAY R. SMITH 2005-A	DUCO CAST-IRON BODY WITH FLASHING COLLAR AND ADJUSTABLE STRAINER HEAD
RD 1	ROOF DRAIN	4"	---	---	---	---	---	JAY R. SMITH 1070-CID-C	DUCO CAST-IRON BODY FLASHING CLAMP AND GRAVEL STOP, WITH CAST-IRON DOME, UNDERDECK CLAMP
OD 1	OVERFLOW DRAIN	4"	---	---	---	---	---	JAY R. SMITH 1080-CID-CIS-C	DUCO CAST-IRON BODY FLASHING CLAMP AND GRAVEL STOP, WITH CAST-IRON DOME, CAST-IRON STANDPIPE, UNDERDECK CLAMP
FD 2	FLOOR DRAIN	4"	---	---	---	---	---	JAY R. SMITH 2120	DUCO CAST-IRON BODY FLASHING COLLAR WITH CAST-IRON TRACTOR GRATE

WATER HEATING SYSTEM RECIRCULATION PUMP

MARK	DESCRIPTION	LOCATION	SERVICE	FLUID TEMP	FLOW GPM	TOTAL HD FT	CONNECTIONS SUCTION	DISCHARGE	HP	ELECTRICAL DATA VOLT	PH	Hz	CONTROLS	OVERALL DIMENSION	MOUNTING	BASED ON MANUFACTURER & MODEL	REMARKS
CP 1	CIRCULATING PUMP	JAN ROOM	DOMESTIC WATER	120° F	-	-	3/4"	3/4"	1/6	115	SINGLE	60	AQUA-STAT	13-3/4"x6-1/2"	IN-LINE	BELL AND GOSSETT SERIES 100	BRONZE

REMARKS

1. THE HEIGHT OF ACCESSIBLE LAVATORIES SHALL BE 34 INCHES MAXIMUM MEASURED TO THE TOP OF THE LAVATORY FROM THE FLOOR.
2. PROVIDE HANDY-SHIELD INSULATION KIT MANUFACTURED BY PLUMBEREX SPECIALTY PRODUCTS.
3. NOT USED
4. WATER CLOSET CONTROLS SHALL BE OPERABLE WITH ONE HAND, AND SHALL NOT REQUIRE TIGHT GRASPING, PINCHING OR TWISTING OF THE WRIST. CONTROLS FOR THE FLUSH VALVES SHALL BE MOUNTED ON THE WIDE SIDE OF TOILET AREAS, NO MORE THAN 44 INCHES ABOVE THE FLOOR. THE FORCE REQUIRED TO ACTIVATE CONTROLS SHALL BE NO GREATER THAN 5 LBS.
5. HOT WATER AND DRAIN PIPES UNDER LAVATORIES SHALL BE INSULATED OR OTHERWISE COVERED. THERE SHALL BE NO SHARP OR ABRASIVE SURFACES UNDER LAVATORIES.
6. THE HEIGHT OF ACCESSIBLE WATER CLOSETS SHALL BE A MINIMUM OF 17 INCHES AND A MAXIMUM OF 19 INCHES MEASURED TO THE TOP OF THE TOILET SEAT.
7. PROVIDE "AMERICAN STANDARD" 7723.008 GRID DRAIN FOR WHEELCHAIR LAVATORY IN ORDER TO COMPLY WITH ADA REQUIREMENTS.
8. FAUCET CONTROLS AND OPERATING MECHANISMS SHALL BE OPERABLE WITH ONE HAND AND SHALL NOT REQUIRE TIGHT GRASPING, PINCHING OR TWISTING OF THE WRIST. THE FORCE REQUIRED TO ACTIVATE CONTROLS SHALL BE NO GREATER THAN 5 LBS. LEVER OPERATED, PUSH TYPE, AND ELECTRONICALLY CONTROLLED MECHANISMS ARE EXAMPLES OF ACCEPTABLE DESIGNS. SELF-CLOSING VALVES ARE ALLOWED IF THE FAUCET REMAINS OPEN FOR AT LEAST 10 SECONDS.
9. DRINKING FOUNTAIN BUBBLE DEVICES SHALL BE ACTIVATED BY CONTROLS WHICH ARE EASILY OPERATED BY A HANDICAPPED PERSON SUCH AS A HAND-OPERATED LEVER TYPE CONTROL LOCATED WITHIN 6 INCHES OF THE FRONT OF THE FOUNTAIN. A PUSH BAR CONTROL ALONG THE FRONT OF THE DRINKING FOUNTAIN, ETC. BUBBLER OUTLET ORIFICES SHALL BE LOCATED WITHIN 6 INCHES OF THE FRONT OF STUDENT DRINKING FOUNTAINS AND SHALL BE A MAXIMUM OF 31 INCHES OFF THE FLOOR. WATER STREAMS FROM BUBBLERS SHALL BE SUBSTANTIALLY PARALLEL TO THE FRONT EDGE OF DRINKING FOUNTAINS.
10. PROVIDE "OLSONITE" 995 TOILET SEAT
11. ELECTRICAL DATA: 115 VOLTS, SINGLE PHASE, 1/6 HORSEPOWER.

HOSE REEL SCHEDULE

MARK	SERVICE
R-1	(2) CA, (1) LUBE, (1) COOLANT, (1) ATF, (1) 40 WT. OIL, (1) CNG OIL, (1) DIFFERENTIAL OIL
R-2	(1) CA, (1) LUBE, (1) COOLANT (1) 40 WT. OIL, (1) ATF (1) CNG OIL
R-3	(1) CA, (1) LUBE

NOTE:
PROVIDE 75 FEET OF HOSE FOR REELS ON THE SOUTH SIDE OF BAYS AND 50 FEET OF HOSE FOR REELS ON THE NORTH SIDE BAYS.

AS-BUILT
Q. deBoard
Contract No. BUS-443B
Date NOV. 2000

CONSTRUCTION CHANGE TABLE

CHANGE	DATE	SHEET NUMBERS REVISED OR ADDED THIS CHANGE

TMAD Engineers, Inc.
Mechanical and Electrical Consulting Engineers
Project Number 97087
TELEPHONE (619) 271-9808
FAX: (619) 271-9832
9845 ERMA ROAD SUITE 200 SAN DIEGO, CA 92131

DESIGNED BY	BM	DATE 12/18/98
DRAWN BY	TW/	12/18/98
CHECKED BY	MK	12/18/98
MTDB PRJ. ENG.		

MTDB
Metropolitan Transit Development Board
1255 Imperial Avenue, Suite 1000, San Diego, Ca. 92101-7490 (619)231-1466

IMPERIAL AVENUE DIVISION
BUS MAINTENANCE FACILITY

PLUMBING SCHEDULES

SCALE: NONE
MTDB CONTRACT NO. BUS-443B
DRAWING NO. P-2
SHEET NO. 69

W:\97087\MPE\787PSCH1.DWG 12/18/98 10:59

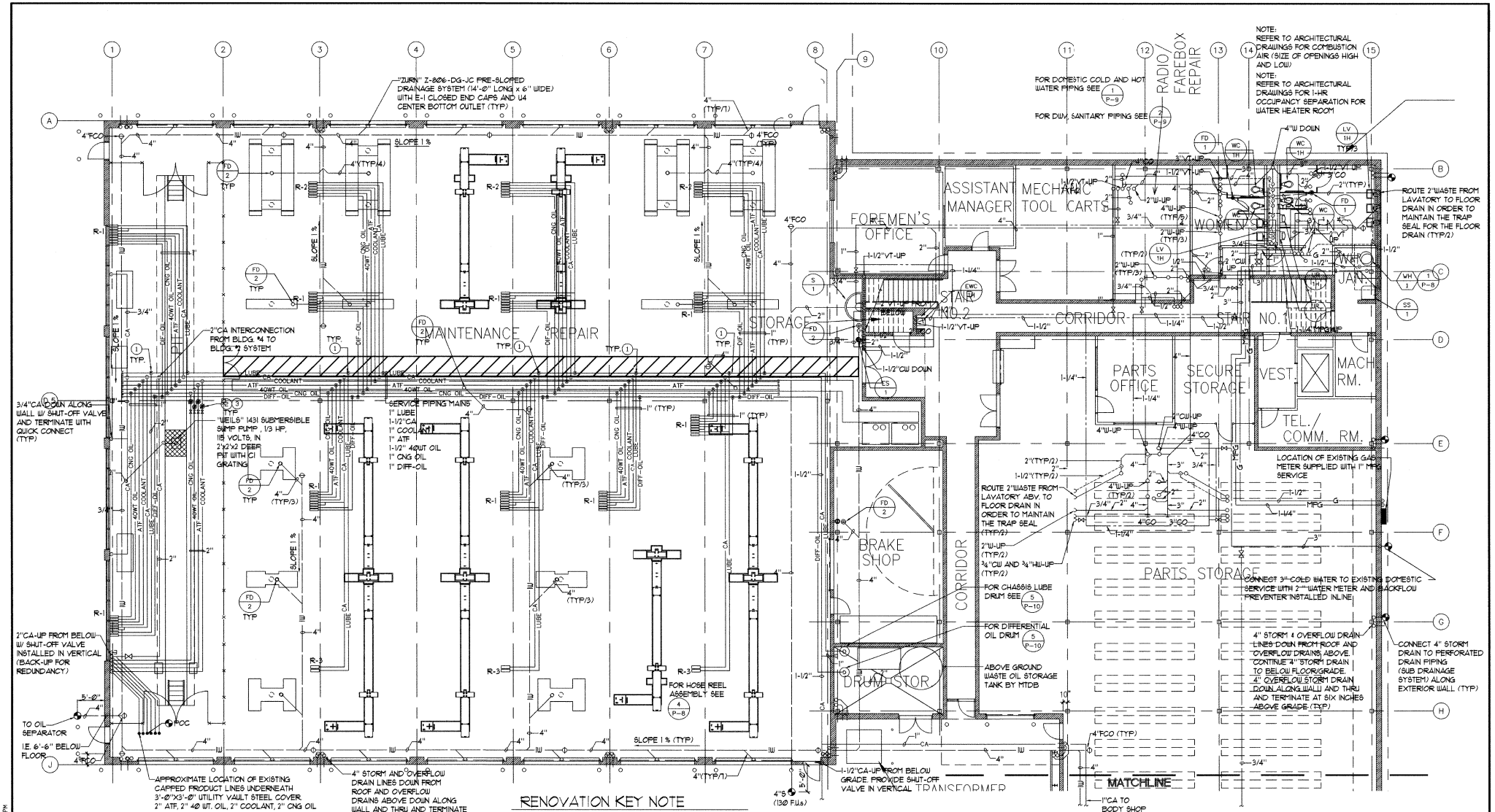

RENOVATION KEY NOTE

1. PROVIDE AND INSTALL FLUID SOLENOID AND PULSE METER IN CNG-OIL, 40WT OIL, ATF, LUBE, COOLANT AND DIFF-OIL BRANCH PIPING FOR SENSING FLUID FLOW THROUGH DISPENSING LOCATION "LINCOLN" MODEL Nos. 69629 AND 84458
2. FURNISH AND INSTALL "SUN" PRESSURE REDUCING VALVE (CARTRIDGE VALVE WHT IN-LINE BODY) #BHB-LNN (VALVE) WITH HCF (BODY) SIZE 1-1/4 INCH
3. ROUTE 1/4-INCH (STAINLESS STEEL) FROM DRAIN PORT ON PRESSURE REDUCING VALVES TO APPROVED POINT OF DISPOSAL AS DIRECTED BY MTDB.

GROUND FLOOR PLAN – PLUMBING

1/8"=1'-0"

AS-BUILT
Contract No. BUS-443B
Date. NOV. 2000

CONSTRUCTION CHANGE TABLE		
CHANGE	DATE	SHEET NUMBERS REVISED OR ADDED THIS CHANGE
4	4/11/00	SECOND FLOOR INTERIOR IMPROVEMENTS

TMAD Engineers, Inc.
Mechanical and Electrical Consulting Engineers
Project Number 97087
TELEPHONE (619) 271-9838
FAX (619) 271-9932
9845 ERMA ROAD SUITE 200 SAN DIEGO, CA 92131

DESIGNED BY	MS	DATE 12/18/98
DRAWN BY	EB/TW	12/18/98
CHECKED BY	MK	12/18/98
MTDB PRJ. ENG.		

MTDB
Metropolitan Transit Development Board
1255 Imperial Avenue, Suite 1000, San Diego, Ca. 92101-7490 (619)231-1466

IMPERIAL AVENUE DIVISION
BUS MAINTENANCE FACILITY

PLUMBING FLOOR PLANS

SCALE 1/8"=1'-0"
MTDB CONTRACT NO. BUS-443B .
DRAWING NO. P-3
SHEET NO. 70

Y:\2000\2000107\MFE\107P-3.dwg 04/20/00 1:17PM

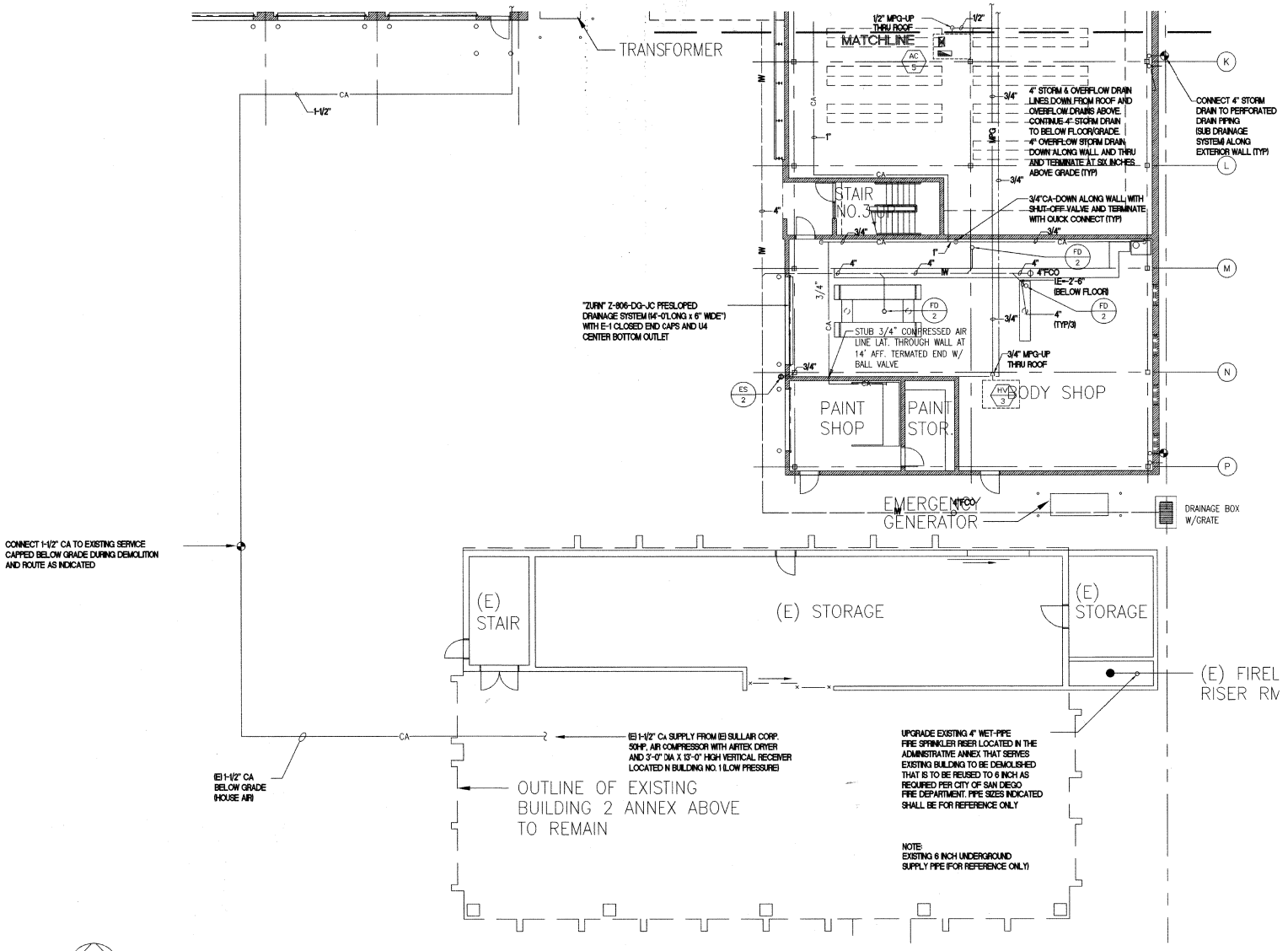

GROUND FLOOR PLAN – PLUMBING
1/8"=1'-0"

AS-BUILT
Contract No. BUS-443B
Date NOV. 2000

CONSTRUCTION CHANGE TABLE		
CHANGE	DATE	SHEET NUMBERS REVISED OR ADDED THIS CHANGE

TMAD Engineers, Inc.
Mechanical and Electrical Consulting Engineers
Project Number 97087
TELEPHONE (619) 271-9808 FAX: (619) 271-9932
9845 ERMA ROAD SUITE 200 SAN DIEGO, CA 92131

DESIGNED BY MS	DATE 12/18/98
DRAWN BY EB/TW	12/18/98
CHECKED BY MK	12/18/98
MTDB PRJ. ENG.	

MTDB
Metropolitan Transit Development Board
1255 Imperial Avenue, Suite 1000, San Diego, Ca. 92101-7490 (619)231-1466

IMPERIAL AVENUE DIVISION
BUS MAINTENANCE FACILITY

PLUMBING FLOOR PLANS

SCALE 1/8"=1'-0"
MTDB CONTRACT NO. BUS-443B
DRAWING NO. P-4
SHEET NO. 71

W:\97087\MPE\787PFP-2.DWG 12/18/98 10:58

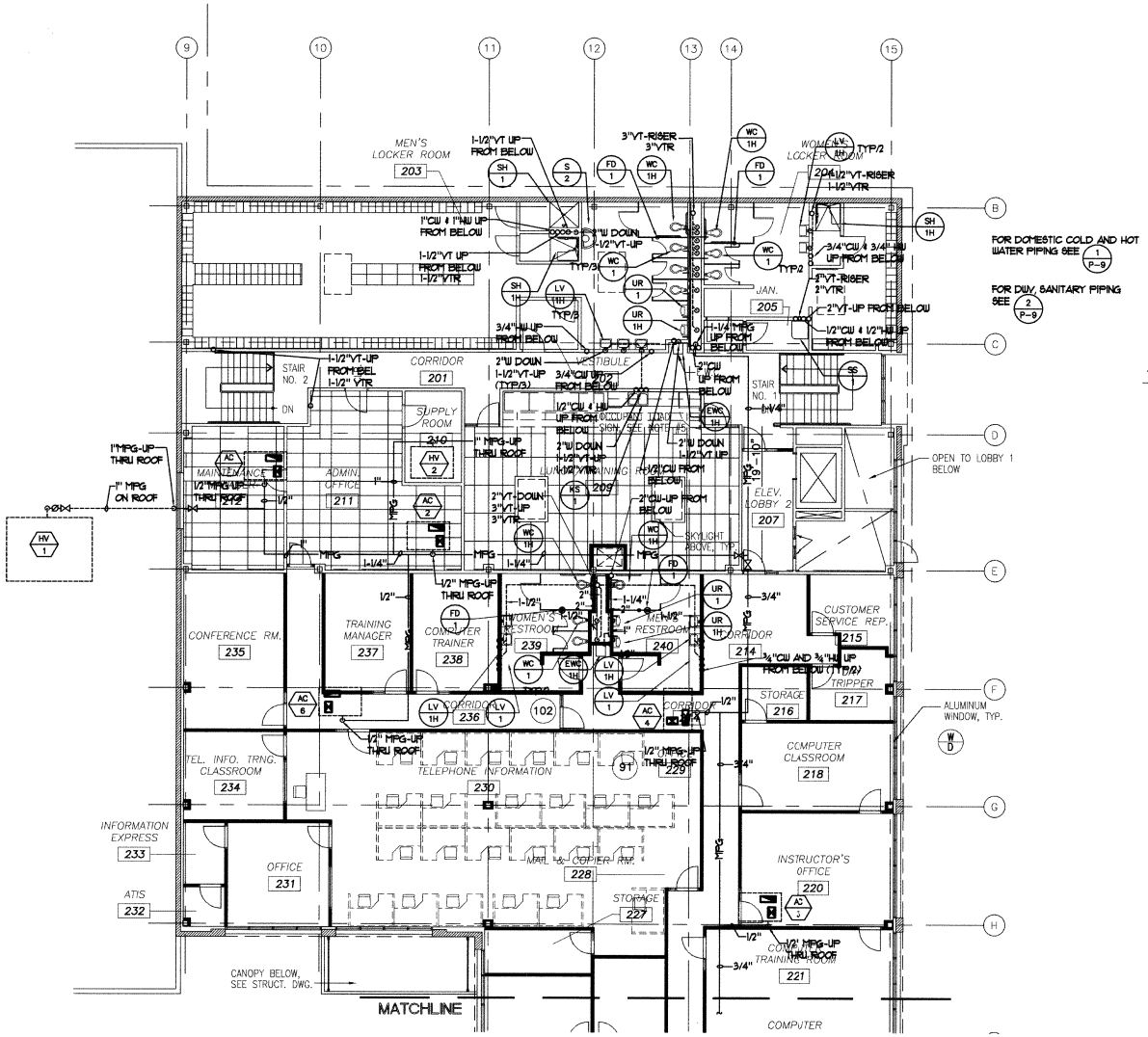

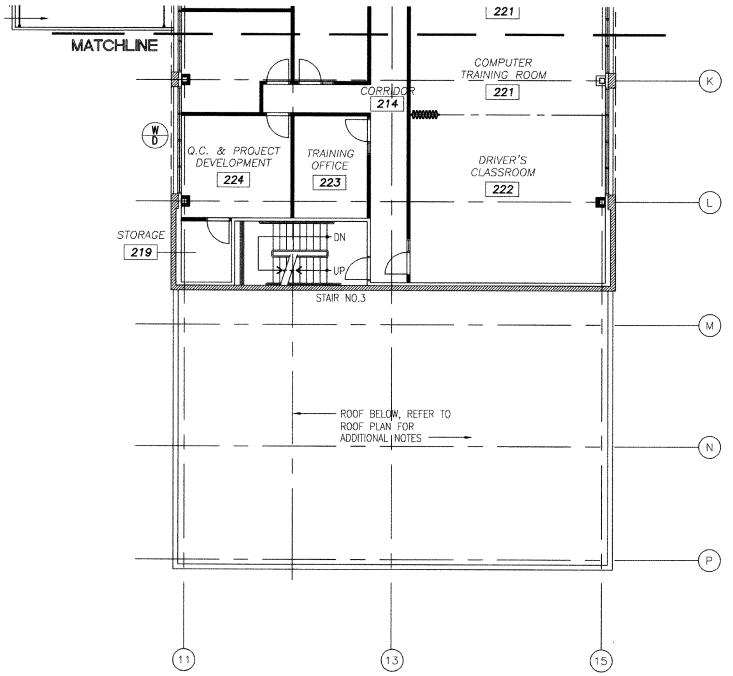

AS-BUILT
Q. Dutonnu
Contract No. BUS-443B
Date NOV. 2000

SECOND FLOOR REFLECTED CEILING PLAN
1/8"=1'-0"
1 / A13.2

TMAD Engineers, Inc.
Mechanical and Electrical Consulting Engineers
Project Number 2000.017
9845 ERMA ROAD SUITE 200 SAN DIEGO, CA 92131
TELEPHONE (858) 271-9808 FAX (858) 271-9932
sandiego@tmadengineers.com

CONSTRUCTION CHANGE TABLE

CHANGE	DATE	SHEET NUMBERS REVISED OR ADDED THIS CHANGE
4	4/17/00	SECOND FLOOR INTERIOR IMPROVEMENTS

STV Incorporated
ENGINEERS/ARCHITECTS/PLANNERS/CONSTRUCTION MANAGERS
1055 WILSHIRE BOULEVARD, SUITE 1455
LOS ANGELES, CALIFORNIA 90017-2499

LICENSED ARCHITECT JON SOO KIM C-24485 RENEWAL DATE STATE OF CALIFORNIA

DESIGNED BY BM	DATE 5/2/00
DRAWN BY TW	5/2/00
CHECKED BY BM	5/2/00
MTDB PRJ. ENG.	

MTDB
Metropolitan Transit Development Board
1255 Imperial Avenue, Suite 1000, San Diego, Ca. 92101-7490 (619)231-1466

IMPERIAL AVENUE DIVISION
BUS MAINTENANCE FACILITY

SECOND FLOOR
PLUMBING FLOOR PLAN

SCALE 1/8"=1'-0"
MTDB CONTRACT NO. BUS-443B
DRAWING NO. P-5
SHEET NO. 72

X:\2000\2100.017\MFE\017P-5.DWG 06/14/00 10:54AM

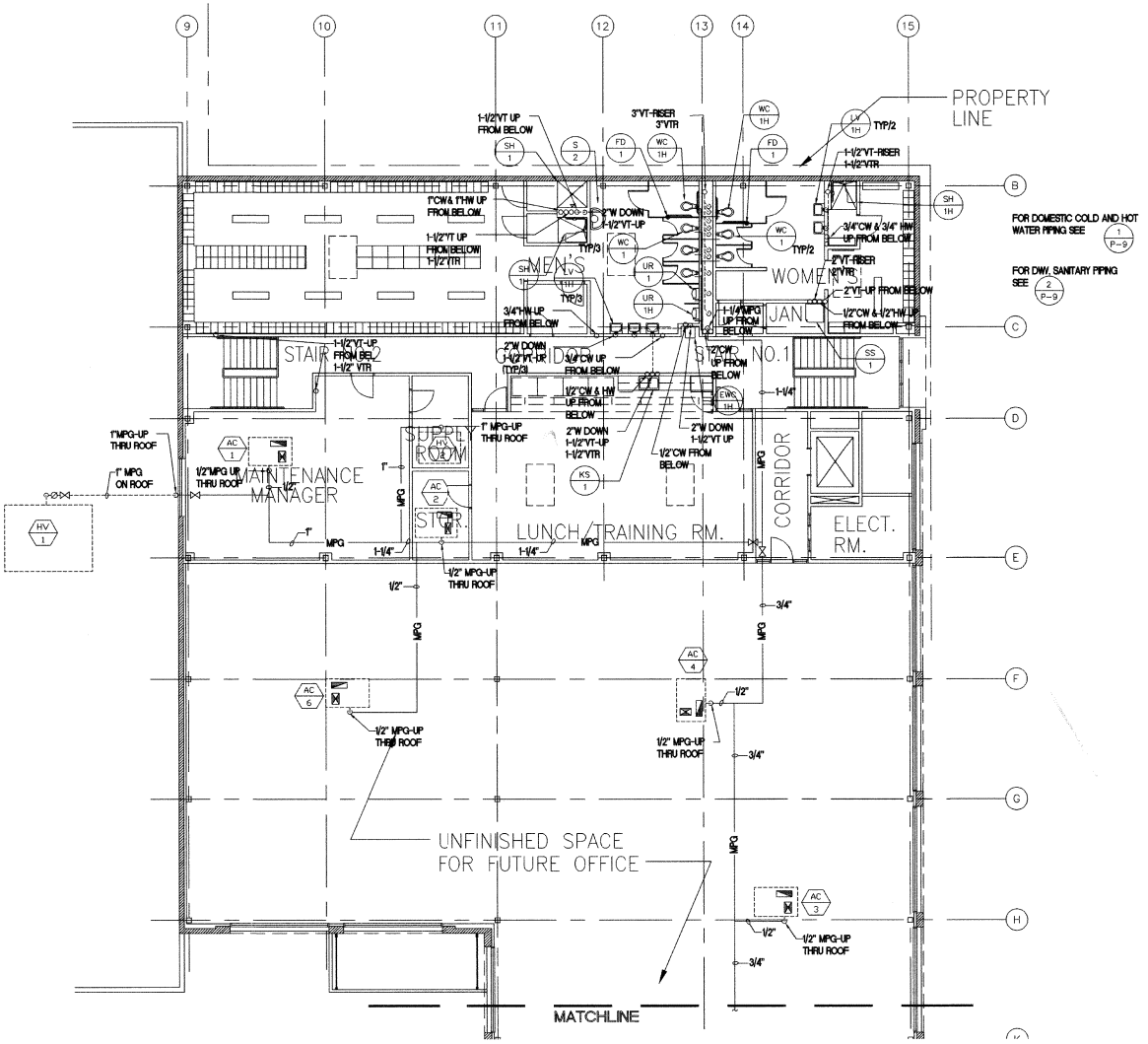

SECOND FLOOR PLAN – PLIMBING
1/8"=1'-0"

AS-BUILT
Q. Dubrueil
Contract No. BUS-443B
Date NOV. 2000

CONSTRUCTION CHANGE TABLE		
CHANGE	DATE	SHEET NUMBERS REVISED OR ADDED THIS CHANGE

TMAD Engineers, Inc.
Mechanical and Electrical Consulting Engineers
Project Number 97087
TELEPHONE (619) 271-6808 FAX (619) 271-9932
9845 ERMA ROAD SUITE 200 SAN DIEGO, CA 92131

DESIGNED BY MS	DATE 12/18/98
DRAWN BY EB/TW	12/18/98
CHECKED BY MK	12/18/98
MTDB PRJ. ENG.	

MTDB
Metropolitan Transit Development Board
1255 Imperial Avenue, Suite 1000, San Diego, Ca. 92101-7490 (619)231-1466

IMPERIAL AVENUE DIVISION
BUS MAINTENANCE FACILITY

PLUMBING FLOOR PLANS

SCALE 1/8"=1'-0"
MTDB CONTRACT NO. BUS-443B .
DRAWING NO. P-5
SHEET NO. 72

V:\97087\MFE\787FFP-3.DWG 12/18/98 10:58

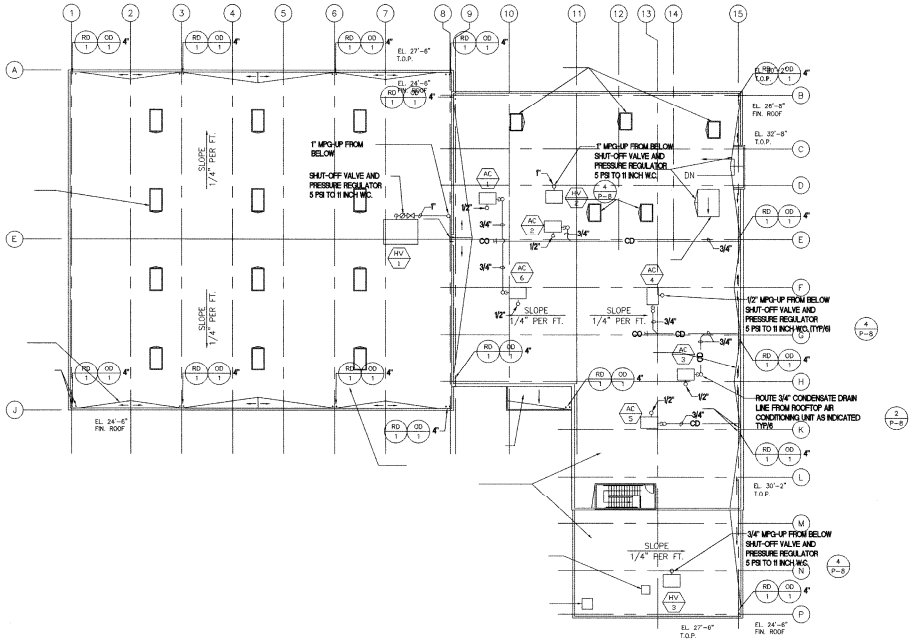

PLUMBING ROOF PLAN
1/16"=1'-0"

AS-BUILT
Contract No. BUS-443B
Date NOV. 2000

CONSTRUCTION CHANGE TABLE		
CHANGE	DATE	SHEET NUMBERS REVISED OR ADDED THIS CHANGE

TMAD Engineers, Inc.
Mechanical and Electrical Consulting Engineers
Project Number 97087
TELEPHONE (619) 271-6800 FAX (619) 271-9932
9640 ETNA ROAD SUITE 200 SAN DIEGO, CA 92126

DESIGNED BY	MS	DATE 12/18/98
DRAWN BY	EBF	12/18/98
CHECKED BY	MK	12/18/98
MTDB PRJ. ENG.		

MTDB
Metropolitan Transit Development Board
1255 Imperial Avenue, Suite 1000, San Diego, Ca. 92101 7400 (619)231-1466

IMPERIAL AVENUE DIVISION
BUS MAINTENANCE FACILITY

PLUMBING ROOF PLANS

SCALE 1/16"=1'-0"
MTDB CONTRACT NO. BUS-443B
DRAWING NO. P-6
SHEET NO. 73

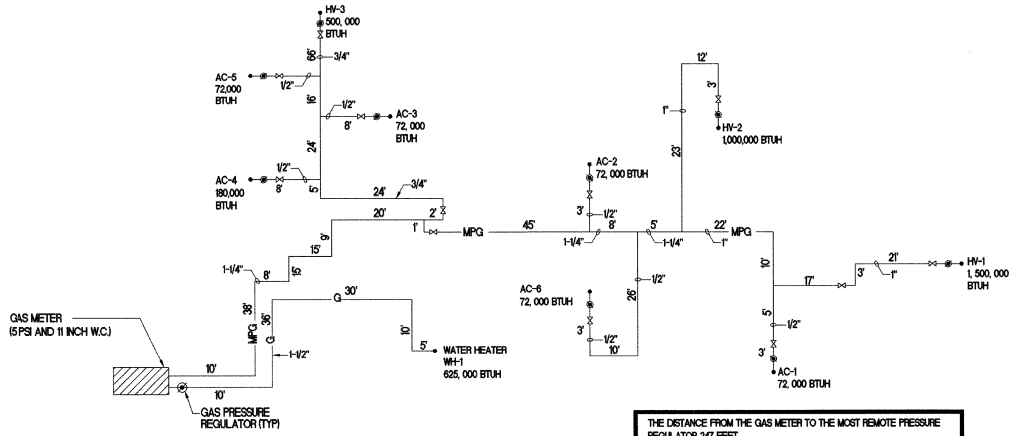

THE DISTANCE FROM THE GAS METER TO THE MOST REMOTE PRESSURE REGULATOR 247 FEET.

SIZING OF THE GAS PIPING BASED ON 300 FEET. THE SIZING OF THE GAS PIPING IS IN ACCORDINACE WITH THE UNIFORM PLUMBING CODE 1994 EDITION CHAPTER 12 FUEL GAS PIPING.

THE DISTANCE FROM THE GAS PRESSURE REGULATOR TO THE MOST OUTLET IS 91 FEET.

1 GAS PIPING DIAGRAM
NO SCALE

AS-BUILT
A. Durand
Contract No. BUS-443B
Date NOV. 2000

CONSTRUCTION CHANGE TABLE		
CHANGE	DATE	SHEET NUMBERS REVISED OR ADDED THIS CHANGE

TMAD Engineers, Inc.
Mechanical and Electrical Consulting Engineers
Project Number
97087
TELEPHONE (619) 271-8808
FAX (619) 271-9932
9845 ERMA ROAD SUITE 200 SAN DIEGO, CA 92131

DESIGNED BY	MS	DATE 12/18/98
DRAWN BY	EB/TW	12/18/98
CHECKED BY	MK	12/18/98
MTDB PRJ. ENG.		

MTDB
Metropolitan Transit Development Board
1255 Imperial Avenue, Suite 1000, San Diego, Ca. 92101-7490 (619)231-1466

IMPERIAL AVENUE DIVISION
BUS MAINTENANCE FACILITY

PLUMBING DETAILS, DIAGRAM

SCALE	NONE
MTDB CONTRACT NO.	BUS-443B
DRAWING NO.	P-7
SHEET NO.	74

W:\97087\MPE\787PDET1.DWG 12/16/98 10:57

NOTES

FOR COMPRESSED AIR HOSE REEL SEE (1/P-10)

FOR COOLANT HOSE REEL SEE (2/P-10)

FOR LUBE HOSE REEL SEE (3/P-10)

FOR ATF, 40WT. OIL, DIFF-OIL AND CNG-OIL HOSE REEL SEE (4/P-10)

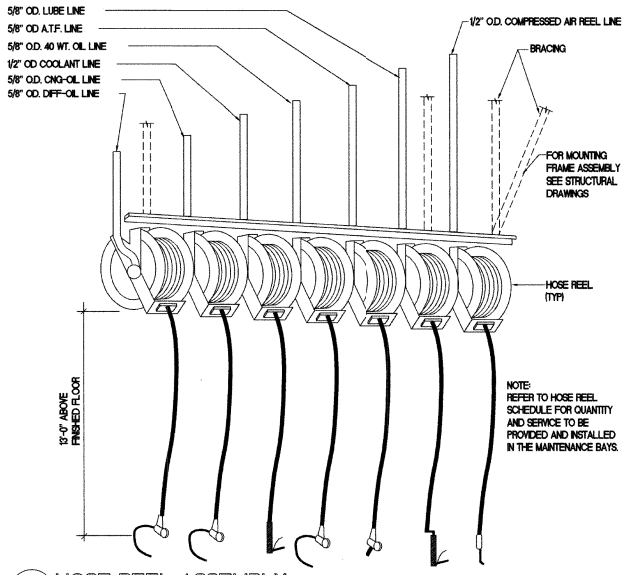

3 HOSE REEL ASSEMBLY
NO SCALE

NOTE:
PROVIDE AND INSTALL (2) STRAPS TO ADEQUATELY BRACE THE WATER HEATER TO RESIST SEISMIC FORCES. ONE STRAP AT TOP 1/3 OF TANK AND ONE STRAP AT THE BOTTOM 1/3 OF THE TANK ANCHORED TO THE WALL.

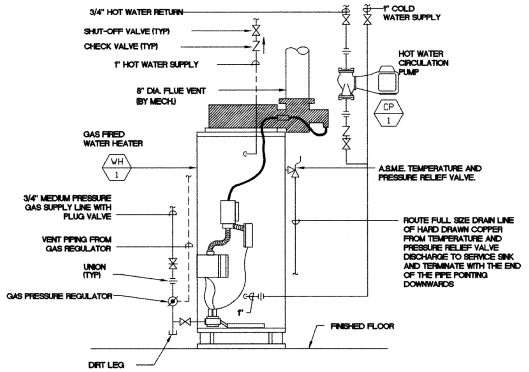

NOTE:
1. SEE MECHANICAL DRAWINGS M-2 AND M-4 FOR ROUTING OF FLUE
2. PROVIDE OPENINGS FOR COMBUSTION AIR 32"x20" HIGH AND LOW

1 GAS FIRED WATER HEATER W/ RECIRCULATION PUMP
NO SCALE

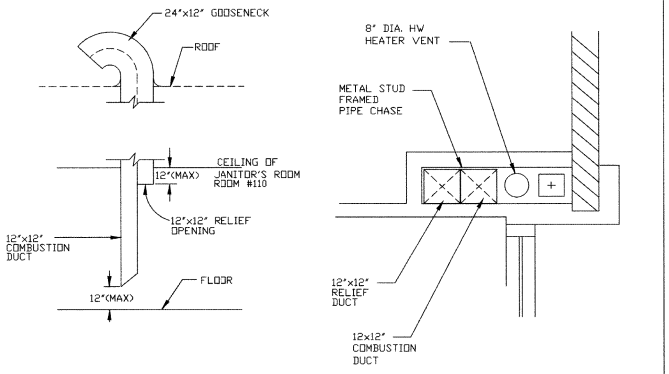

COMBUSTION AIR INTAKE
NO SCALE

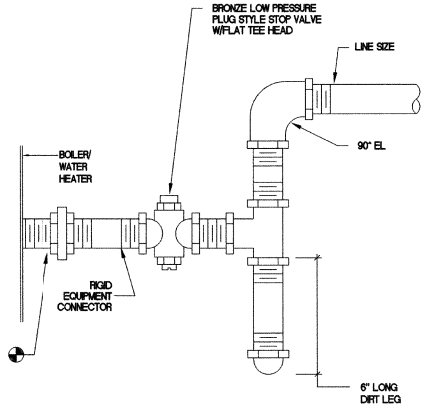

4 GAS PIPING CONNECTION
NO SCALE

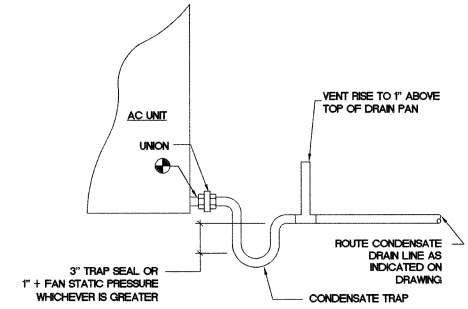

2 CONDENSATE DRAIN DETAIL
NO SCALE

AS-BUILT
Q. duBrand
Contract No. BUS-443B
Date NOV. 2000

CONSTRUCTION CHANGE TABLE		
CHANGE	DATE	SHEET NUMBERS REVISED OR ADDED THIS CHANGE

TMAD Engineers, Inc.
Mechanical and Electrical Consulting Engineers
Project Number 97087
TELEPHONE (619) 271-9808
FAX (619) 271-9832
6845 ERMA ROAD SUITE 200 SAN DIEGO, CA 92131

DESIGNED BY	MS	DATE 12/18/98
DRAWN BY	EB/TW	12/18/98
CHECKED BY	MK	12/18/98
MTDB PRJ. ENG.		

MTDB
Metropolitan Transit Development Board
1255 Imperial Avenue, Suite 1000, San Diego, Ca. 92101-7490 (619)231-1466

IMPERIAL AVENUE DIVISION
BUS MAINTENANCE FACILITY

PLUMBING DETAILS

SCALE NONE
MTDB CONTRACT NO. BUS-443B .
DRAWING NO. P-8
SHEET NO. 75

X:\97087\MPE\787PDET2.DWG 01/21/99 9:16AM

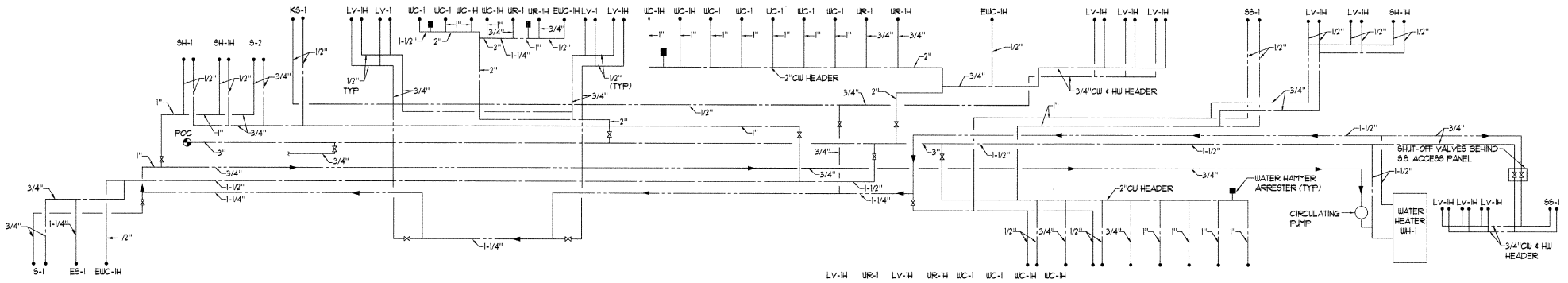

1 DOMESTIC COLD AND HOT WATER PIPING DIAGRAM
NO SCALE

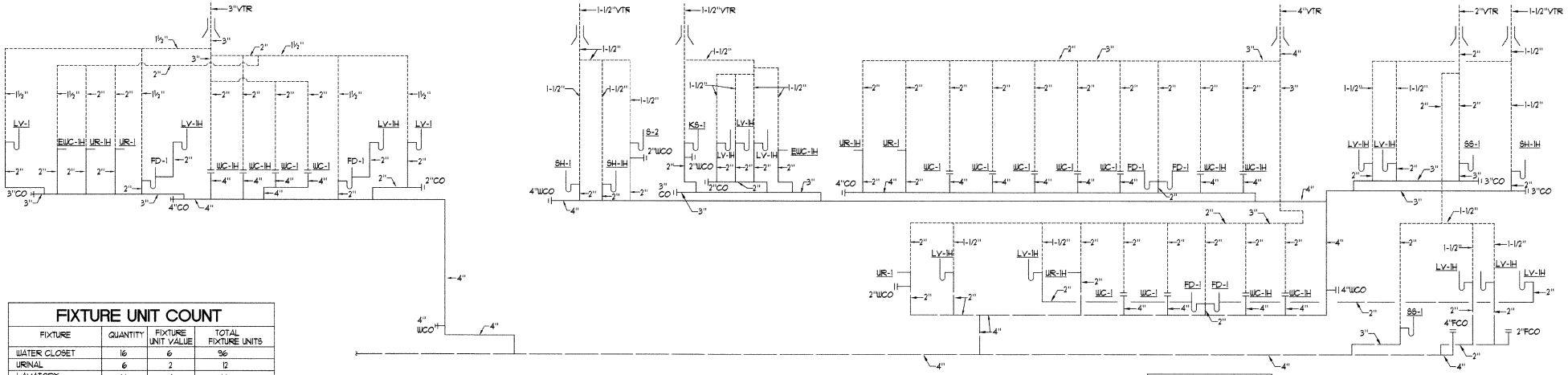

2 DWV, SANITARY PIPING DIAGRAM
NO SCALE

FIXTURE UNIT COUNT

FIXTURE	QUANTITY	FIXTURE UNIT VALUE	TOTAL FIXTURE UNITS
WATER CLOSET	16	6	96
URINAL	6	2	12
LAVATORY	14	1	14
SHOWER	3	2	6
SERVICE SINK	2	6	12
DRINKING FOUNTAIN	3	1	3
KITCHEN SINK	1	2	2
SINK	2	3	6
FLOOR DRAIN	4	2	8
			159 F.U. TOTAL

AS-BUILT
Contract No. BUS-443B
Date NOV. 2000

TMAD Engineers, Inc.
Mechanical and Electrical Consulting Engineers
Project Number 2000.017
TELEPHONE (858) 271-5808
FAX: (858) 271-9932
9845 ERMA ROAD SUITE 200 SAN DIEGO, CA 92131
tmad@cts.com

CONSTRUCTION CHANGE TABLE

CHANGE	DATE	SHEET NUMBERS REVISED OR ADDED THIS CHANGE
4	4/17/00	SECOND FLOOR INTERIOR IMPROVEMENTS

STV Incorporated
ENGINEERS/ARCHITECTS/PLANNERS/CONSTRUCTION MANAGERS
1055 WILSHIRE BOULEVARD, SUITE 1455
LOS ANGELES, CALIFORNIA 90017-2499

LICENSED ARCHITECT JOHN SOO KIM C-24485 RENEWAL DATE STATE OF CALIFORNIA

	DATE
DESIGNED BY MS	
DRAWN BY EB/TW	
CHECKED BY MK	
MTDB PRJ. ENG.	

MTDB
Metropolitan Transit Development Board
1255 Imperial Avenue, Suite 1000, San Diego, Ca. 92101-7490 (619)231-1466

IMPERIAL AVENUE DIVISION
BUS MAINTENANCE FACILITY

PLUMBING DETAILS

SCALE	NONE
MTDB CONTRACT NO.	BUS-443B
DRAWING NO.	P-9
SHEET NO.	76

Y:\2000\2100.017\MPE\017P-9.dwg 04/20/00 1:17PM

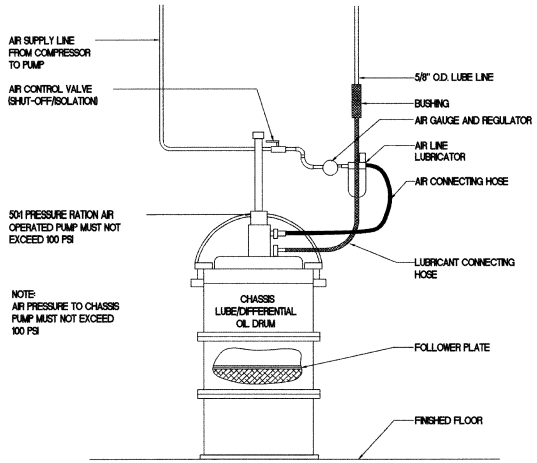

5 PUMP HOOKUP DETAIL
NO SCALE

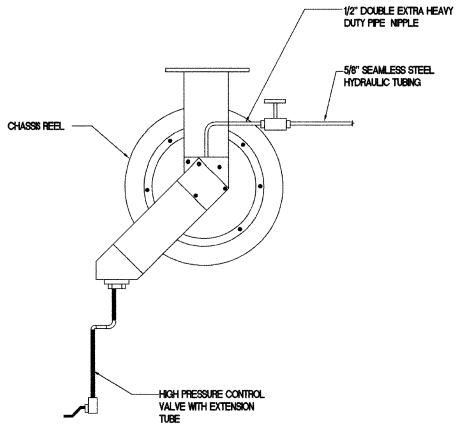

3 LUBE HOSE REEL
NO SCALE

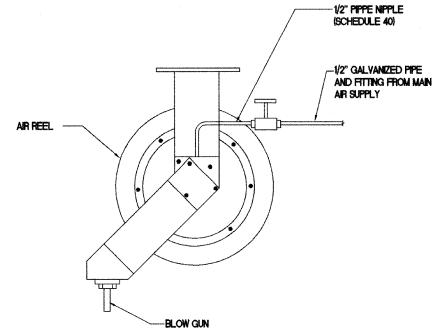

1 COMPRESSED AIR HOSE REEL
NO SCALE

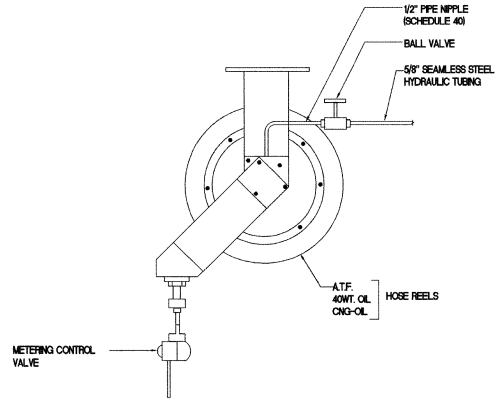

4 ATF, 40WT. OIL, DIFF-OIL AND CNG-OIL HOSE REEL
NO SCALE

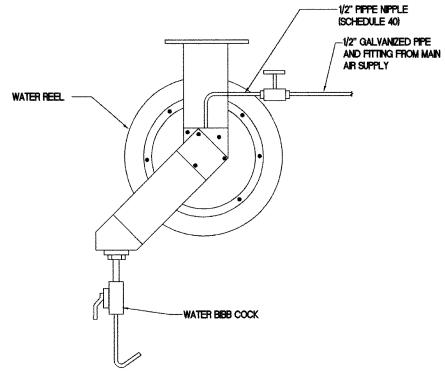

2 COOLANT HOSE REEL
NO SCALE

AS-BUILT
A. Alvarez
Contract No. BUS-443B
Date NOV. 2000

CONSTRUCTION CHANGE TABLE		
CHANGE	DATE	SHEET NUMBERS REVISED OR ADDED THIS CHANGE

TMAD Engineers, Inc.
Mechanical and Electrical Consulting Engineers
Project Number 97087
TELEPHONE (619) 271-9606
FAX (619) 271-9632
9845 ERMA ROAD SUITE 200 SAN DIEGO, CA 92131

DESIGNED BY MS	DATE 12/18/98
DRAWN BY EB/TW	12/18/98
CHECKED BY MK	12/18/98
MTDB PRJ. ENG.	

MTDB
Metropolitan Transit Development Board
1255 Imperial Avenue, Suite 1000, San Diego, Ca. 92101-7490 (619)231-1466

IMPERIAL AVENUE DIVISION
BUS MAINTENANCE FACILITY

PLUMBING DETAILS

SCALE	NONE
MTDB CONTRACT NO.	BUS-443B .
DRAWING NO.	P-10
SHEET NO.	77

W:\97087\MPE\787PDET4.DWG 12/18/98 10:58

SYMBOL	DESCRIPTION
	2'x4' RECESSED FLUORESCENT LIGHT FIXTURE
	SURFACE MOUNTED FLUORESCENT LIGHT FIXTURE
	SURFACE MOUNTED FLUORESCENT STRIP LIGHT
	HID, FLUORESCENT, INCANDESCENT LIGHT FIXTURE, PENDENT MOUNTED ON CEILING
	HID, FLUORESCENT, INCANDESCENT LIGHT FIXTURE, WALL MOUNTED ON FLUSH BOX
	LIGHT FIXTURE ON EMERGENCY CIRCUIT
	RECESSED HID, FLUORESCENT OR INCANDESCENT DOWNLIGHT
	CEILING MOUNTED EXIT LIGHT WITH DIRECTIONAL ARROWS, DARKENED AREA INDICATES FACE LIT
	WALL MOUNTED EXIT LIGHT WITH DIRECTIONAL ARROWS, DARKENED AREA INDICATES FACE LIT
J	CEILING MOUNTED JUNCTION BOX
J	JUNCTION BOX, FLUSH MOUNTED AT +15" U.N.O.
Jmm	JUNCTION BOX WITH FLEXIBLE CONNECTION
$a,b,c	SPST TOGGLE SWITCH, LETTERS INDICATE THE NUMBER OF SWITCHES THEY CONTROL. MOUNTED FLUSH IN BOX AT +42" U.N.O.
$M	MANUAL MOTOR STARTER, +42" U.N.O
$3	THREE WAY SWITCH, +42" U.N.O
	COMBINATION MOTOR STARTER/DISCONNECT
	DUPLEX GROUNDED CONVENIENCE OUTLET MOUNTED IN FLUSH BOX AT +24" U.N.O.
	DUPLEX GROUNDED CONVENIENCE OUTLET MOUNTED IN SURFACE BOX AR +24" U.N.O.
	DOUBLE DUPLEX GROUNDED CONVENIENCE OUTLET MOUNTED IN SURFACE BOX AT +24" U.N.O.
GFI	DUPLEX GROUNDED CONVENIENCE OUTLET WITH GROUND FAULT INTERRUPTER
	RECEPTACLE 20A, 125VAC, CLASS 1, DIVISION 2
S	DUPLEX GROUNDED SURGE SUPPRESSION OUTLET AT 15" U.N.O.
C	DUPLEX GROUNDED CONVENIENCE OUTLET MOUNTED ABOVE COUNTER BACKSPLASH
R	CORD REEL SUSPENDED FROM CEILING – SEE PLUMBING PLAN FOR LOCATION
IDH	INTRUSION DETECTION ALARM HORN
MS	MAGNETIC DOOR ALARM SWITCH
K	DOOR ALARM KEY OVERRIDE SWITCH
	SPECIAL PURPOSE GROUNDED CONVENIENCE OUTLET MOUNTED IN FLUSH BOX AT +15" U.N.O.
	MOTOR OUTLET
	BRANCH CIRCUIT CONDUIT CONCEALED IN WALL OR CEILING
	BRANCH CIRCUIT CONDUIT CONCEALED IN FLOOR OR UNDERGROUND
	BRANCH CIRCUIT CONDUIT CONDUIT RUN EXPOSED
	TICKS INDICATE THE NO. OF #12 WIRE. NO TICKS INDICATES 1/2"C-2#12. PROVIDE SEPARATE GROUND WIRE IN EACH BRANCH CIRCUIT CONDUIT
E	EMERGENCY SYSTEM CONDUIT
FA	FIRE ALARM SYSTEM CONDUIT,
S	SECURITY SYSTEM CONDUIT
T	TELEPHONE SYSTEM CONDUIT,
PA	PUBLIC ADDRESS SYSTEM CONDUIT,
C	COMPUTER SYSTEM CONDUIT
	CONDUIT RUN TURNED UP
	CONDUIT RUN TURNED DOWN
A–1,3	BRANCH CIRCUIT CONDUIT HOMERUN WITH PANEL AND CIRCUIT DESIGNATED
	FLUSH MOUNTED LIGHTING OR POWER PANEL
	SURFACE MOUNTED LIGHTING OR POWER PANEL
	SWITCHBOARD, MOTOR CONTROL CENTER
	TELEPHONE BACKBOARD 8'H X 8'W X 3/4 THICK PLYWOOD U.N.O.
	TELEPHONE OUTLET AT +15" U.N.O. WITH 1/2"C. STUBBED ABOVE CEILING

SYMBOL	DESCRIPTION
F	WALL MOUNTED FIRE ALARM MANUAL PULL STATION AT +48" U.N.O.
H	WALL MOUNTED FIRE ALARM HORN
SK	WALL MOUNTED FIRE ALARM MINI-HORN AND STROBE AT +80" U.N.O.
FACP	FIRE ALARM CONTROL PANEL
ANN	FIRE ALARM ANNUNCIATOR PANEL
SD	SMOKE DETECTOR
WF	WATER FLOW SWITCH
TS	TAMPER/TROUBLE SWITCH
	CLOSED CIRCUIT TELEVISION CAMERA
	DATA/COMPUTER SYSTEM OUTLET WITH 1/2"C. STUBBED ABOVE CEILING
M	CCTV MONITOR
7	NOTE REFERENCE
AC 7	EQUIPMENT IDENTIFICATION
	NORTH ARROW
7 / E-3	DETAIL REFERENCE
7 / E-5	SECTION REFERENCE
	SWITCH
	FUSE
	TRANSFORMER WITH GROUND
F-100	FEEDER DESIGNATION
M	UTILITY CO. METER
	TRANSFER SWITCH
42000AIC SYM	AMPS INTERRUPTING CAPACITY SYMMETRICAL
3P, 225AF, 225AT, 10	CIRCUIT BREAKER: NUMBER OF POLES; AMPS TRIP; AMPS FRAME; KAIC RATING
3P, 100, 100, JJN	SWITCH AND FUSE DESIGNATION: NUMBER OF POLES; SWITCH SIZE; FUSE SIZE; FUSE CLASS
F 3P, 100, 60, RK5	DISCONNECT SWITCH 'F' INDICATES FUSED TYPE: NUMBER OF POLES; SWITCH SIZE; FUSE SIZE; FUSE TYPE
	CONDUIT STUB-UP & CAPPED
AMP	PUBLIC ADDRESS AMPLIFIER CONSOLE
S	SURFACE CEILING MOUNTED P.A. SPEAKER
S	RECESSED CEILING MOUNTED P.A. SPEAKER
S	WALL MOUNTED P.A. SPEAKER
INT	INTRUSION DETECTION CONTROL PANEL
GDCP	GAS DETECTOR CONTROL PANEL
G	GAS DETECTOR ALARM HORN AND STROBE
M	WALL MOUNTED MICROPHONE OUTLET
	RECEPTACLE, 20A. 208V,2P,3W AT +24" U.N.O.
	MOTION SENSOR FOR LIGHT CONTROL
FD	FIRE SMOKE DAMPER

ABBREVIATIONS

A	AMP
AFF	ABOVE FINISHED FLOOR
AFG	ABOVE FINISHED GRADE
BC	BARE COPPER
BKBD	BACKBOARD
C	CONDUIT
CAT 5	CATAGORY 5 CABLE
CB	CIRCUIT BREAKER
CCTV	CLOSED CIRCUIT TV
CKT	CIRCUIT
COMB.	COMBINATION
C.O.	CONDUIT ONLY
CU	COPPER
DISC.	DISCONNECT
EQUIP	EQUIPMENT
EP	EXPLOSION PROOF
FA	FIRE ALARM
G	GROUND
GND	GROUND
HPS	HIGH PRESSURE SODIUM
IC	INTERCOM
IDS	INTRUSION DETECTION SYSTEM
IG	ISOLATED GROUND
J-BOX	JUNCTION BOX
LPS	LOW PRESSURE SODIUM
LTG	LIGHTING
MTD	MOUNTED
P	POLE OR PHASE
PNL	PANEL
SW	SWITCH
SWBD	SWITCHBOARD
TEL	TELEPHONE
TYP	TYPICAL
U/C	UNDERCOUNTER
UG	UNDERGROUND
UGPS	UNDERGROUND PULL SECTION
U.O.N.	UNLESS OTHERWISE NOTED
V	VOLTS
W	WATTS OR WIRES
WP	WEATHERPROOF
XFMR	TRANSFORMER

LIGHTING MANDATORY MEASURES NOTES CHECKLIST

BUILDING LIGHTING SHUT-OFF
THE BUILDING IS A 24 HOUR OPPERATIONAL MAINTENANCE FACILITY WHERE AUTOMATIC LIGHTING SHUT OFF COULD BE A SAFETY HAZARD. THE BUILDING LIGHTING SHUT-OFF SYSTEM FOR NON SAFETY HAZARD AREAS SHALL CONSISTS OF OCCUPANT-SENSORS.

OVERRIDE FOR BUILDING LIGHTING SHUT-OFF
NOT APPLICABLE

AUTOMATIC CONTROL DEVICES CERTIFIED
ALL AUTOMATIC CONTROL DEVICES SPECIFIED ARE CERTIFIED BY THE STATE OF CALIFORNIA. ALL ALTERNATE EQUIPMENT SHALL BE CERTIFIED BY THE STATE OF CALIFORNIA AND LISTED IN THE ADIRECTORY OF AUTOMATIC LIGHTING CONTROL DEVICES@ AND INSTALLED AS DIRECTED BY THE MANUFACTURER.

FLUORESCENT BALLAST AND LUMINAIRES CERTIFIED
ALL FLUORESCENT FIXTURES SPECIFIED FOR THE PROJECT ARE CERTIFIED BY THE STATE OF CALIFORNIA, AND LISTED IN THE ADIRECTORY OF CERTIFIED LUMINAIRES AND BALLASTS.@ ALL INSTALLED FIXTURES SHALL BE CERTIFIED.

TANDEM WIRING FOR TWO-LAMP BALLAST'S
ALL ONE AND THREE LAMP FLUORESCENT FIXTURES ARE TANDEM WIRED WITH TWO (2) LAMP BALLAST WHERE REQUIRED BY STANDARDS 132; OR LUMINAIRES USE ELECTRONIC HIGH FREQUENCY BALLAST ARE NOT REQUIRED TO BE TANDEM WIRED.

INDIVIDUAL ROOM/AREA CONTROLS
EACH ROOM AND AREA IN THESE BUILDING WITH FLOOR-TO-CEILING WALLS IS EQUIPPED WITH A SEPARATE SWITCH OR OCCUPANCY SENSOR DEVICE.

UNIFORM REDUCTION FOR INDIVIDUAL ROOMS
ALL ROOMS AND AREAS GREATER THAN 100 SQUARE FEET OR MORE THAN 1.2 WATTS PER SQUARE FOOT OF LIGHTING LOAD SHALL BE CONTROLLED WITH BI-LEVEL SWITCHING FOR UNIFORM REDUCTION OF LIGHTING WITHIN THE ROOM OR CONTROLLED BY OCCUPANT SENSING DEVICE. CORRIDORS ARE NOT REQUIRED TO BE BI-LEVEL SWITCHED.

DAYLIT AREA CONTROL
ALL ROOMS WITH WINDOWS AND SKYLIGHTS, THAT ARE GREATER THAN 250 SQUARE FEET, AND THAT ALLOW FOR THE EFFECTIVE USE OF DAYLIGHT IN THE AREA SHALL HAVE 50% OF THE LAMPS IN EACH DAYLIT AREA CONTROLLED BY A SEPARATE SWITCH.

CONTROL OF EXTERIOR LIGHTS
EXTERIOR MOUNTED FIXTURES SERVED FROM THE ELECTRICAL PANEL INSIDE THE BUILDING ARE CONTROLLED WITH A DIRECTIONAL PHOTOCELL OR TIME SWITCH, WHICH CONTROLS THE LIGHTING DURING THE HOURS OF DARKNESS.

AS-BUILT
A. Durand
Contract No. BUS-443B
Date NOV. 2000

ELECTRICAL GENERAL NOTES

1. HASH MARKS ON RACEWAY RUN INDICATE NUMBER OF #12 CONDUCTORS.
2. NO HASH MARKS ON RACEWAY RUN INDICATES 1/2 INCH CONDUIT AND TWO #12 CONDUCTORS. CONDUCTOR SIZES OTHER THAN TWO #12 ARE NOTED ON PLANS. CONDUIT SIZES SHALL BE AS PER NEC.
3. A SEPARATE INSULATED EQUIPMENT GROUNDING CONDUCTOR SIZED PER NEC, SHALL BE PROVIDED IN EACH FEEDER AND BRANCH CIRCUIT INSTALLED IN THE SAME CONDUIT OR RACEWAY SUPPLYING SUCH FEEDER OR BRANCH CIRCUIT.
4. CONTRACTOR SHALL VISIT THE SITE AND VERIFY ALL DIMENSIONS, ELEVATIONS, EXISTING CONDITIONS AND POINTS OF CONNECTION. ANY DISCREPANCIES SHALL BE CALLED TO THE ATTENTION OF THE OWNER'S REPRESENTATIVE BEFORE PROCEEDING WITH THE WORK.
5. COORDINATE ALL ELECTRICAL WORK WITH THE OTHER TRADES. NO SUBSEQUENT ALLOWANCE WILL BE MADE BY THE OWNER FOR FAILURE OF THE CONTRACTOR TO COORDINATE HIS WORK WITH OTHER TRADES AND OBTAIN ALL OTHER PERTINENT INFORMATION REQUIRED TO MEET ACTUAL BUILDING OR FIELD CONDITIONS.
6. CONNECTIONS TO ALL EQUIPMENT FURNISHED BY OWNER OR OTHERS SHALL BE COORDINATED. THE CONTRACTOR SHALL BE RESPONSIBLE FOR OBTAINING MANUFACTURERS SHOP DRAWINGS PRIOR TO ROUGH IN OF CONDUITS, DEVICES AND EQUIPMENT.
7. WHEREVER A DISCREPANCY IN QUANTITY OR SIZE OF CONDUIT, WIRE, EQUIPMENT DEVICES, CIRCUIT BREAKERS, TRANSFORMERS, GROUND FAULT PROTECTION SYSTEMS, ETC. (ALL MATERIALS), THAT ARISES ON THE DRAWINGS AND/OR SPECIFICATIONS, THE CONTRACTOR SHALL BE RESPONSIBLE FOR PROVIDING AND INSTALLING ALL MATERIAL AND SERVICES REQUIRED BY THE STRICTEST CONDITIONS NOTED ON DRAWINGS AND/OR IN THE SPECIFICATIONS TO INSURE COMPLETE AND OPERABLE SYSTEMS AS REQUIRED BY THE OWNER AND ENGINEER.
8. ALL ELECTRICAL PENETRATIONS THROUGH FIRE RATED AREA SEPARATION AND CORRIDOR ASSEMBLIES INCLUDING CONDUITS AND PIPING SHALL BE TIGHTLY AND SOLIDLY SEALED WITH FIRESTOPPING WALLBOARD COMPOUND AND SHALL BE AN APPROVED MATERIAL AS PRESCRIBED IN THE STATE FIRE MARSHAL STANDARD 43.1.
9. ALL EQUIPMENT INSTALLED UNDER OR PERMITTED BY THE ELECTRICAL CODE SHALL BE LISTED, LABELED OR CERTIFIED BY A NATIONALLY RECOGNIZED TESTING LABORATORY (NRTL).
10. ALL TELEPHONE WORK SHALL BE IN COMPLIANCE WITH THESE DRAWINGS AND THE REQUIREMENTS OF THE TELEPHONE COMPANY. IT SHALL BE THE CONTRACTOR'S RESPONSIBILITY TO CONTACT THE TELEPHONE COMPANY AND RECEIVE COMPLETE INFORMATION ON THEIR REQUIREMENTS PRIOR TO THE SUBMISSION OF BID. THE ACT OF SUBMITTING THE BID SHALL CONSTITUTE ACCEPTANCE OF FULL RESPONSIBILITY BY THE CONTRACTOR TO INSTALL SERVICE IN COMPLIANCE WITH THE SERVING UTILITY.
11. ALL ELECTRICAL SERVICE WORK SHALL BE IN COMPLIANCE WITH THESE DRAWINGS AND THE REQUIREMENTS OF THE POWER COMPANY. IT SHALL BE THE CONTRACTOR'S RESPONSIBILITY TO CONTACT THE POWER COMPANY AND RECEIVE COMPLETE INFORMATION ON THE POWER COMPANY'S REQUIREMENTS PRIOR TO THE SUBMISSION OF BID. THE ACT OF SUBMITTING THE BID SHALL CONSTITUTE ACCEPTANCE OF FULL RESPONSIBILITY BY THE CONTRACTOR TO INSTALL SERVICE IN COMPLIANCE WITH THE SERVING UTILITY. THE CONTRACTOR SHALL COORDINATE WITH THE POWER COMPANY FOR REQUIRED SUBMITTALS, INSPECTIONS AND FINAL CONNECTION.
12. ALL UNDERGROUND UTILITIES SHALL BE FIELD VERIFIED PRIOR TO TRENCHING. ANY SERVICE INTERRUPTION SHALL BE COORDINATED WITH THE OWNER'S REPRESENTATIVE.
13. THE CONTRACTOR SHALL BE RESPONSIBLE FOR ALL TRENCHING AND BACKFILLING AS REQUIRED TO PERFORM HIS WORK. THE CONTRACTOR SHALL USE EXTREME CAUTION WHEN TRENCHING SO AS NOT TO INTERFERE WITH EXISTING UNDERGROUND UTILITIES. THE CONTRACTOR SHALL BE RESPONSIBLE FOR THE PROPER AND APPROVED REPAIR OF ANY AND ALL DAMAGES CAUSED.
14. EXACT LOCATION OF ALL CEILING MOUNTED LIGHTING FIXTURES SHALL BE AS INDICATED ON THE ARCHITECTURAL REFLECTED CEILING PLANS. ALL OUTLET LOCATIONS SHALL BE COORDINATED WITH ARCHITECTURAL ELEVATIONS PRIOR TO ROUGH IN.
15. THE FIRE ALARM SYSTEMS SHOWN ON THESE DRAWINGS ARE FOR BIDDING PURPOSES ONLY AND SHALL NOT BE USED FOR CONSTRUCTION. FIRE ALARM SHOP DRAWINGS SHALL BE SUBMITTED TO THE FIRE MARSHAL FOR APPROVAL PRIOR TO INSTALLATION. THE DRAWINGS FOR SUBMITTAL TO THE FIRE MARSHALL SHALL INCLUDE BUT ARE NOT LIMITED TO THE FOLLOWING:
    1. POINT TO POINT WIRING DIAGRAM.
    2. FIRE ALARM RISER DETAILS.
    3. NUMBER OF CONDUCTORS PER CIRCUIT.
    4. SIZE (GAUGE) OF ELECTRICAL CONDUCTORS.
    5. SYSTEM BATTERY CALCULATIONS.
    6. WORST-CASE VOLTAGE DROP CALCULATIONS.
    7. CSFM LISTING SHEET FOR EACH COMPONENT.
    8. MANUFACTURERS CUT SHEET FOR EACH COMPONENT.
    9. OTHER: (ARTICLE 14, 1991 UFC)
16. ALL ELECTRICAL EQUIPMENT SHALL BE BRACED OR ANCHORED TO RESIST A HORIZONTAL FORCE ACTING IN ANY DIRECTION USING THE FOLLOWING CRITERIA:
    1. EQUIPMENT ON GRADE – 20% OF OPERATING WEIGHT
    2. EQUIPMENT ON STRUCTURE – 30% OF OPERATING WEIGHT
    3. FOR FLEXIBLY MOUNTED EQUIPMENT USED FOUR (4) TIMES THE ABOVE VALUES, AND FOR SIMULTANEOUS VERTICAL FORCE USE ONE-THIRD (1/3) TIMES THE HORIZONTAL FORCE.
    4. THE ABOVE VALUES ARE FOR AN IMPORTANCE FACTOR I = 1.0 AND SEISMIC ZONE Z = 0.4.
    5. WHERE ANCHORAGE DETAILS ARE NOT SHOWN ON THE DRAWINGS THE FIELD INSTALLATION SHALL BE SUBJECT TO THE APPROVAL OF THE STRUCTURAL ENGINEER AND THE FIELD ENGINEER OF THE OFFICE OF THE STATE ARCHITECT.
17. CONDUIT SHALL NOT BE RUN THROUGH ANY STRUCTURAL MEMBER OF THE BUILDING, EXCEPT AS SPECIFICALLY DIRECTED BY THE OWNER'S REPRESENTATIVE. UNDER NO CIRCUMSTANCE SHALL CONDUIT RUN THROUGH COLUMNS, FOOTINGS OR GRADE BEAMS.
18. ALL ELECTRICAL DEVICES AND APPARATUS MOUNTED IN THE MAINTENANCE/REPAIR SHOP OR THE BODY SHOP SHALL BE MOUNTED AT LEAST 18" ABOVE THE FLOOR UNLESS OTHERWISE NOTED. ALL ELECTRICAL DEVICES, INCLUDING CONDUITS, MOUNTED BELOW 18" AFF SHALL HAVE A HAZARDOUS CLASSIFICATION OF CLASS 1, DIVISION 2.

REGISTERED PROFESSIONAL ENGINEER – MARK WAI KAM – No. 9304 – Exp. 6-30-01 – ELECTRICAL – STATE OF CALIFORNIA

CONSTRUCTION CHANGE TABLE

CHANGE	DATE	SHEET NUMBERS REVISED OR ADDED THIS CHANGE

STV Incorporated
ENGINEERS & PLANNERS
1055 WILSHIRE BLVD., SUITE 1455
LOS ANGELES, CA 90017

DESIGNED BY	S. CONNER	DATE 11/98
DRAWN BY	K. SPRADLING	11/98
CHECKED BY	M. NIEDERHAUS	11/98
MTDB PRJ. ENG.		

MTDB
Metropolitan Transit Development Board
1255 Imperial Avenue, Suite 1000, San Diego, Ca. 92101-7490 (619)231-1466

IMPERIAL AVENUE DIVISION
BUS MAINTENANCE FACILITY

ELECTRICAL LEGEND AND ABBREVIATIONS

SCALE: NONE
MTDB CONTRACT NO. BUS-443B
DRAWING NO. E-10.1
SHEET NO. 78

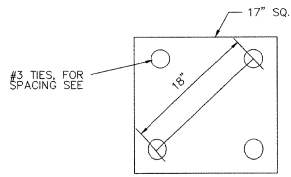

ANCHOR BASE DETAIL — D / E-4
SCALE: NONE

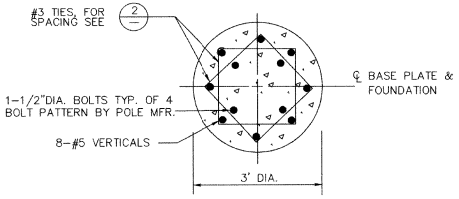

SECTION — E / E-4
SCALE: NONE

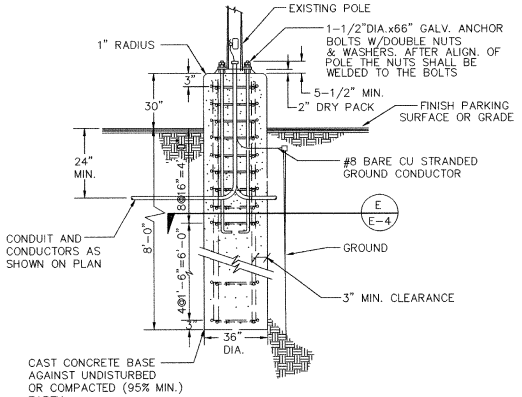

POLE BASE DETAIL — 2 / E10.2
SCALE: NONE

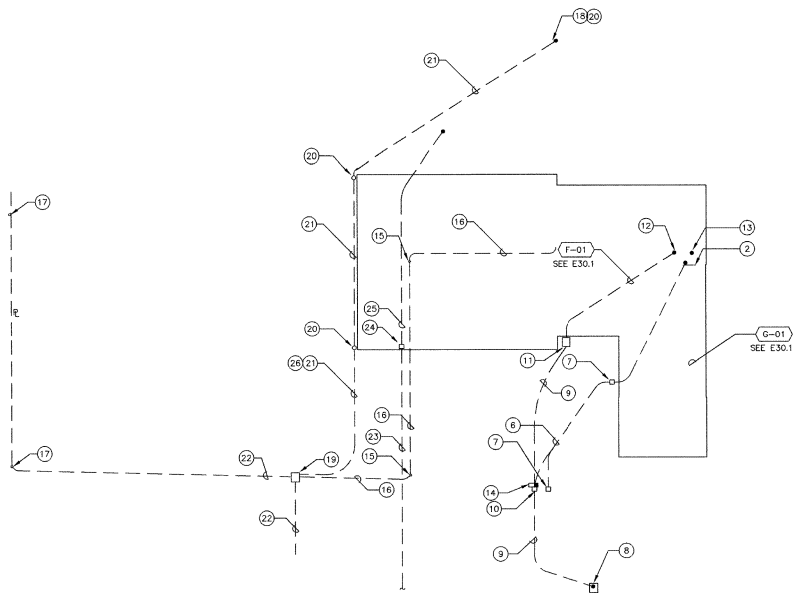

ELECTRICAL SITE PLAN — 1 / E10.2
1"=40'-0"

NOTES

1. NOT USED.
2. NEW TELEPHONE BACKBOARD.
3. NOT USED.
4. NOT USED.
5. NOT USED.
6. PROVIDE NEW 2-4" PVC SCHEDULE 40 CONDUITS. BURY MINIMUM 24" BELOW GRADE. CUT AND PATCH EXISTING ASPHALT CONCRETE PAVING TO MATCH.
7. PROVIDE NEW 2'-0"x3'-0"x2'-6" DEEP PRECAST CONCRETE PULL BOX WITH BOLT DOWN TYPE GALVANIZED STEEL SAFETY PLATE TRAFFIC COVER, WITH "TELEPHONE" INSCRIBED ON COVER.
8. EXISTING POWER CO. PAD MOUNT TRANSFORMER. RUN NEW CONDUITS INTO PRIMARY SIDE OF PULL BOX. (BY OTHERS).
9. PROVIDE NEW 2-4" PVC SCHEDULE 40 CONDUITS. BURY PER SDG&E REQUIREMENTS . CUT AND PATCH CONCRETE AND ASPHALT PAVING TO MATCH.
10. PROVIDE NEW PRECAST CONCRETE PULL BOX PER SDG&E REQUIREMENTS.
11. PROVIDE NEW PRECAST CONCRETE PAD AND GROUNDING FOR POWER CO. PAD MOUNT TRANSFORMER PER SDG&E REQUIREMENTS.
12. STUB-UP CONDUITS INTO BOTTOM OF UNDERGROUND PULL SECTION. CONCRETE ENCASE CONDUITS WHERE THEY PASS THROUGH FIRST FLOOR.
13. STUB-UP CONDUITS INTO BOTTOM OF AUTOMATIC TRANSFER SWITCH.
14. 60KW GENERATOR.
15. REMOVE EXISTING (4) 1000W. HPS LIGHT POLE, BASE AND CONDUIT. POLE & LIGHTS ARE TO BE RELOCATED.
16. REMOVE EXISTING UNDERGROUND WIRE. ABANDON CONDUIT.
17. DEMOLISH EXISTING LIGHT STANDARD & FOUNDATION RECONSTRUCT NEW LIGHT STANDARD AS SHOWN
18. INTERCEPT EXISTING CONDUIT OUT OF POLE BASE AND CONNECT TO NEW CONDUIT AND WIRE.
19. EXISTING HANDHOLE TO REMAIN. MAKE NECESSARY CONNECTION FOR RELOCATED LIGHTS.
20. RELOCATE POLE WITH (4) 1000W. HPS FLOODLIGHT FIXTIRES. MOUNTING ON NEW POLE BASE PER DETAIL 2/E10.2.
21. RECONNECT SITE LIGHTS WITH NEW 1" PVC SCHEDULE 40, 4#6 & 1#6 GND. BURY A MINIMUM 24" BELOW GRADE.
22. EXISTING UNDERGROUND SITE LIGHTING CONDUIT & WIRE TO REMAIN.
23. EXISTING UNDERGROUND CONDUIT & WIRE TO BE ABANDON IN PLACE.
24. EXISTING HANDHOLE TO BE REMOVED.
25. EXISTING CONDUIT & WIRE TO BE REMOVED.
26. REPAIR PAVING TO MATCH EXISTING.

AS-BUILT
A. deBerard
Contract No BUS-443B
Date NOV. 2000

REGISTERED PROFESSIONAL ENGINEER — ANDREW WAI KAN — No. 9304 — Exp. 9-30-01 — ELECTRICAL — STATE OF CALIFORNIA

CONSTRUCTION CHANGE TABLE		
CHANGE	DATE	SHEET NUMBERS REVISED OR ADDED THIS CHANGE

STV Incorporated
ENGINEERS & PLANNERS
1055 WILSHIRE BLVD. SUITE 1455
LOS ANGELES, CA 90017

DESIGNED BY	S. CONNER	11/98
DRAWN BY	K. SPRADLING	11/98
CHECKED BY	M. NIEDERHAUS	11/98
MTDB PRJ. ENG.		

MTDB
Metropolitan Transit Development Board
1255 Imperial Avenue, Suite 1000, San Diego, Ca. 92101-7490 (619)231-1466

IMPERIAL AVENUE DIVISION
BUS MAINTENANCE FACILITY

ELECTRICAL
SITE PLAN

SCALE	1"=40'-0"
MTDB CONTRACT NO.	BUS-443B
DRAWING NO.	E-10.2
SHEET NO.	79

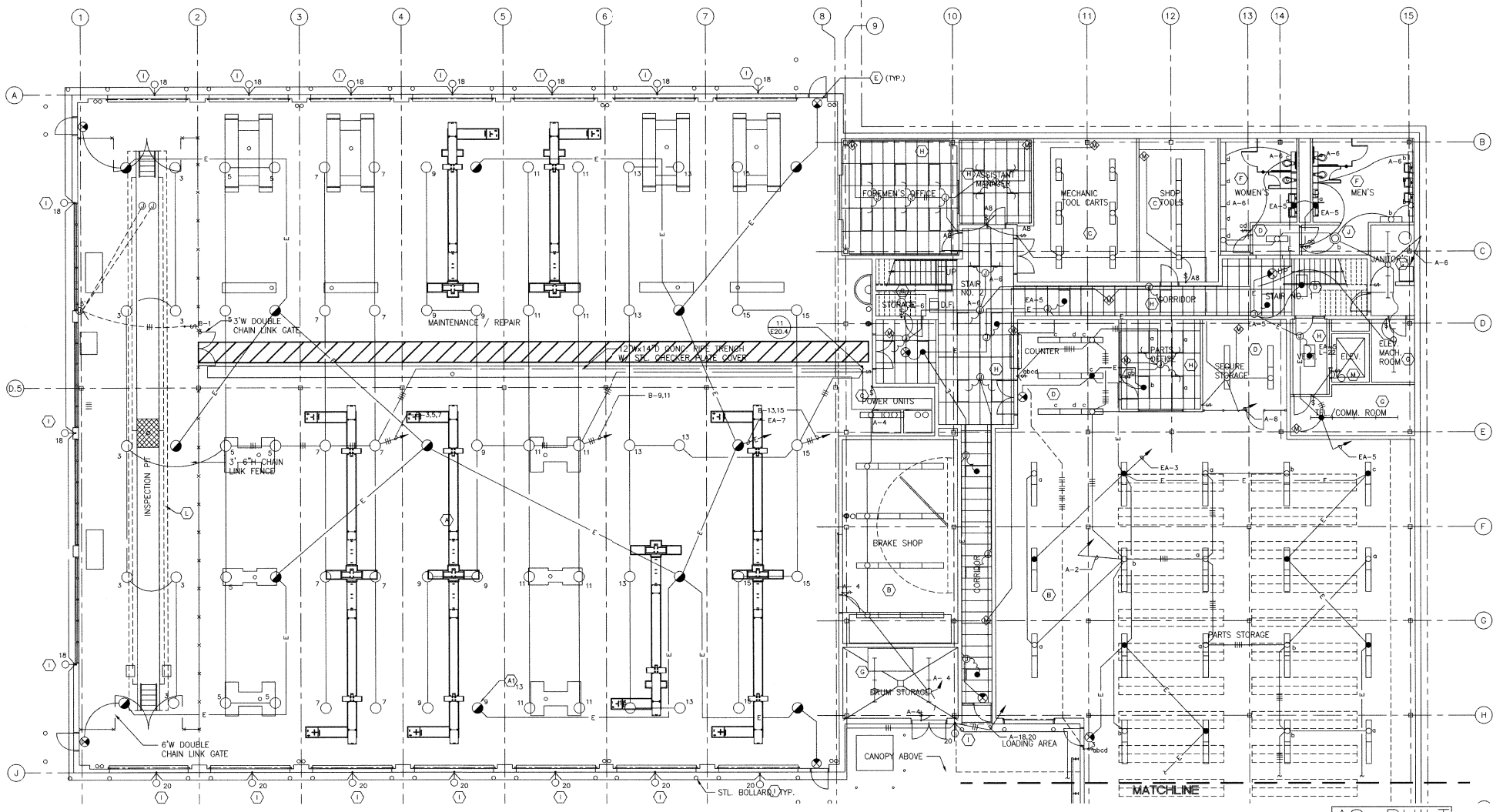

GROUND FLOOR NORTH LIGHTING PLAN

1/8"=1'-0"

1 / E11.1

AS-BUILT

Contract No. BUS-443B

Date NOV. 2000

CONSTRUCTION CHANGE TABLE		
CHANGE	DATE	SHEET NUMBERS REVISED OR ADDED THIS CHANGE

STV Incorporated
ENGINEERS & PLANNERS
1055 WILSHIRE BLVD., SUITE 1455
LOS ANGELES, CA. 90017

		DATE
DESIGNED BY	S. CONNER	11/98
DRAWN BY	K. SPRADLING	11/98
CHECKED BY	M. NIEDERHAUS	11/98
MTDB PRJ. ENG.		

MTDB
Metropolitan Transit Development Board
1255 Imperial Avenue, Suite 1000, San Diego, Ca. 92101-7490 (619)231-1466

IMPERIAL AVENUE DIVISION
BUS MAINTENANCE FACILITY

GROUND FLOOR NORTH LIGHTING PLAN

SCALE	1/8"=1'-0"
MTDB CONTRACT NO.	BUS-443B
DRAWING NO.	E11.1
SHEET NO.	80

NOTE:
(1) PROVIDE CLASS 1, DIV 1 WALL SWITCH.

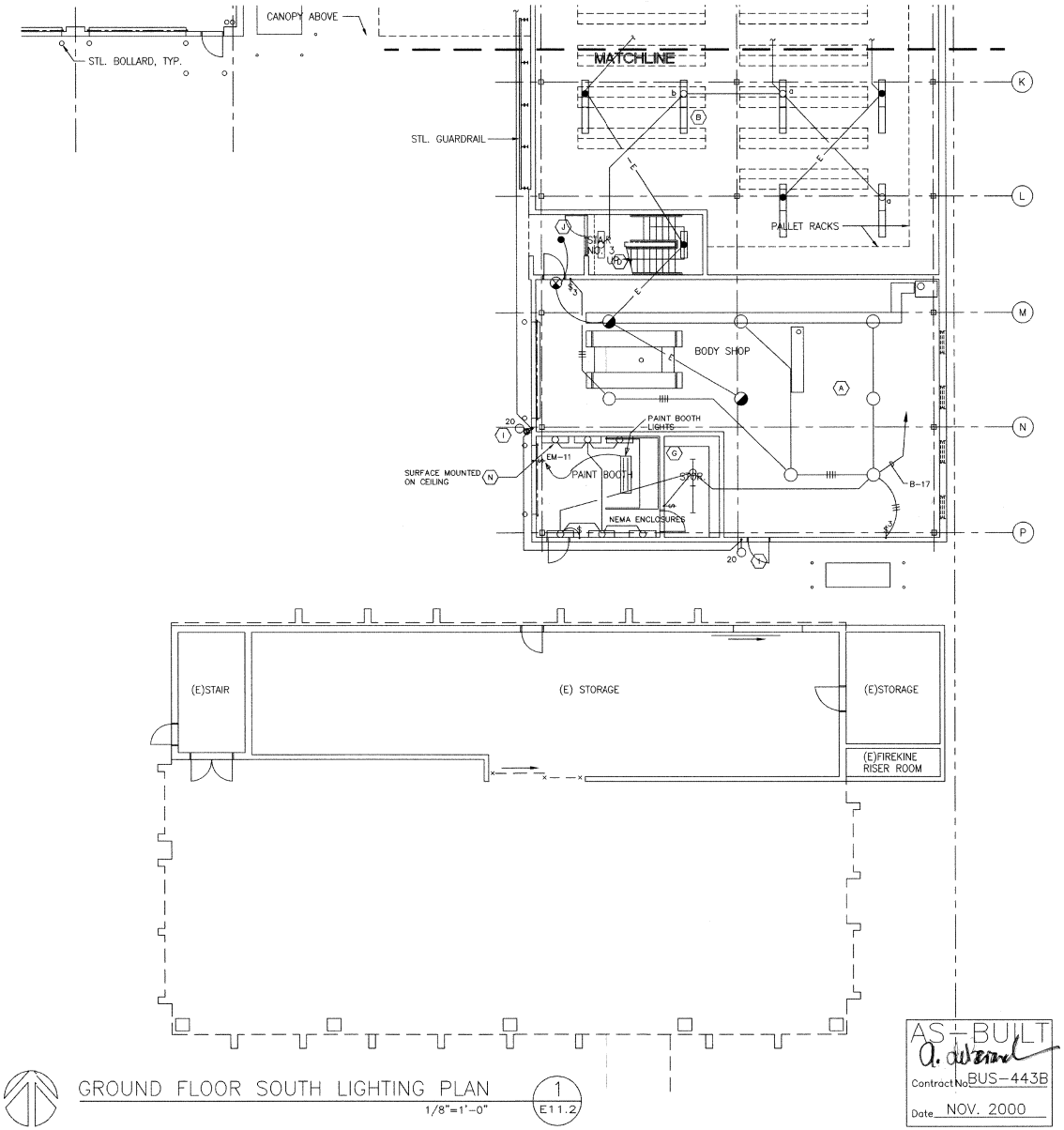

GROUND FLOOR SOUTH LIGHTING PLAN
1/8"=1'-0"
1 / E11.2

AS-BUILT
Contract No BUS-443B
Date NOV. 2000

REGISTERED PROFESSIONAL ENGINEER ANDRE WAI No. 9304 Exp. 9-30-01 ELECTRICAL STATE OF CALIFORNIA

CONSTRUCTION CHANGE TABLE		
CHANGE	DATE	SHEET NUMBERS REVISED OR ADDED THIS CHANGE

STV Incorporated
ENGINEERS & PLANNERS
1055 WILSHIRE BLVD., SUITE 1455
LOS ANGELES, CA. 90017

DESIGNED BY	S. CONNER	11/98
DRAWN BY	K. SPRADLING	11/98
CHECKED BY	M. NIEDERHAUS	11/98
MTDB PRJ. ENG.		

MTDB
Metropolitan Transit Development Board
1255 Imperial Avenue, Suite 1000, San Diego, Ca. 92101-7490 (619)231-1466

IMPERIAL AVENUE DIVISION
BUS MAINTENANCE FACILITY

GROUND FLOOR SOUTH LIGHTING PLAN

SCALE	1/8"=1'-0"
MTDB CONTRACT NO.	BUS-443B
DRAWING NO.	E11.2
SHEET NO.	81

1

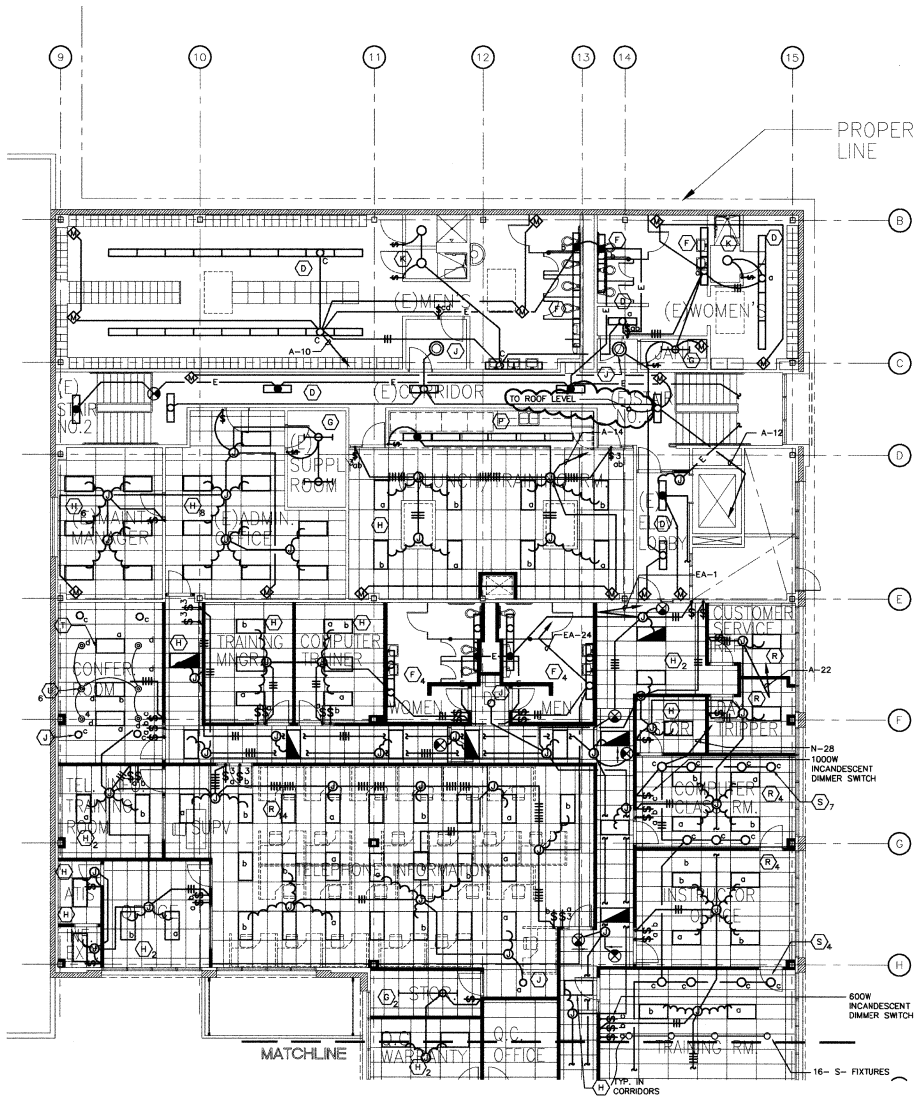

SECOND FLOOR LIGHTING PLAN 1 E11.3
1/8"=1'-0"

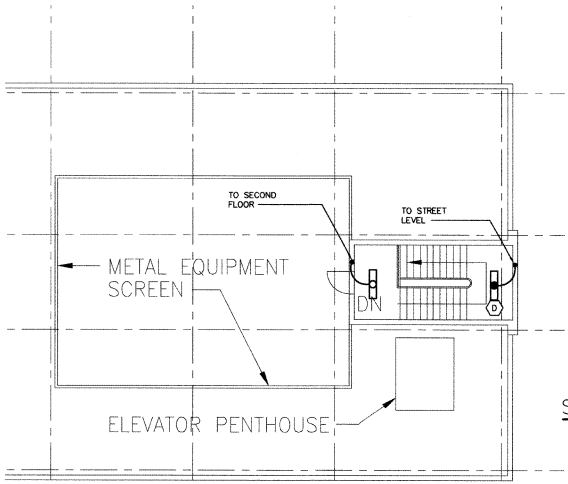

ROOF LEVEL LIGHTING PLAN 2 E11.3
1/8"=1'-0"

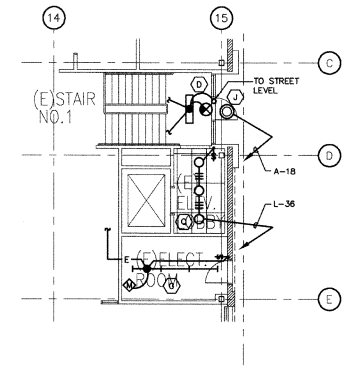

STREET LEVEL LIGHTING PLAN 3 E11.3
1/8"=1'-0"

AS-BUILT
Contract No. BUS-443B
Date NOV. 2000

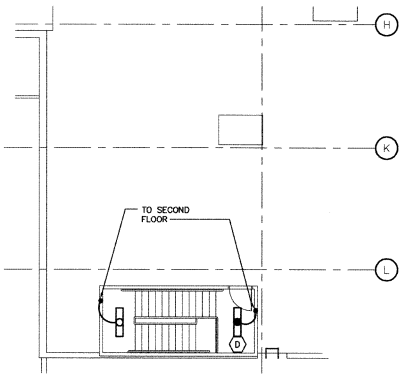

ROOF LEVEL LIGHTING PLAN 4 E11.3
1/8"=1'-0"

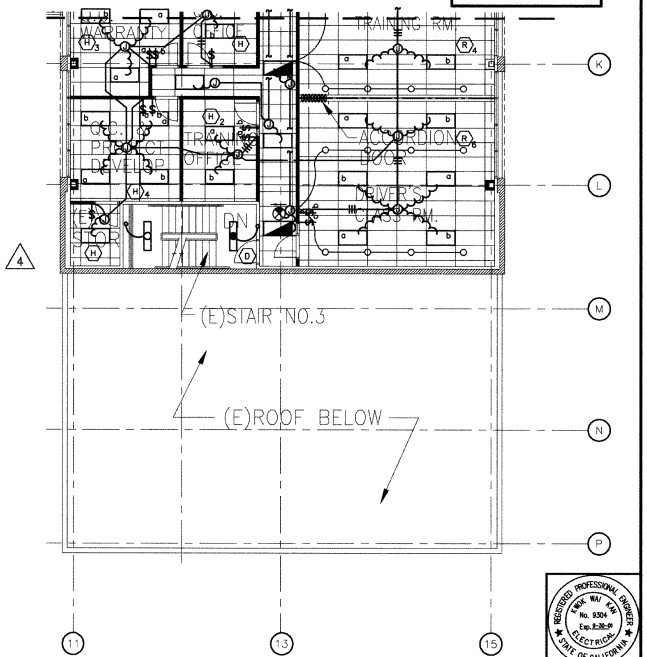

CONSTRUCTION CHANGE TABLE		
CHANGE	DATE	SHEET NUMBERS REVISED OR ADDED THIS CHANGE
4	4/17/00	SECOND FLOOR INTERIOR IMPROVEMENTS

STV Incorporated
ENGINEERS & PLANNERS
1055 WILSHIRE BLVD., SUITE 1455
LOS ANGELES, CA. 90017

	DATE
DESIGNED BY M. NIEDERHAUS	6/00
DRAWN BY K. SPRADLING	6/00
CHECKED BY M. NIEDERHAUS	6/00
MTDB PRJ. ENG.	

MTDB
Metropolitan Transit Development Board
1255 Imperial Avenue, Suite 1000, San Diego, Ca. 92101-7490 (619)231-1466

IMPERIAL AVENUE DIVISION
BUS MAINTENANCE FACILITY

SECOND FLOOR LIGHTING PLAN

SCALE 1/8"=1'-0"
MTDB CONTRACT NO. BUS-443B
DRAWING NO. E11.3
SHEET NO. 82

REGISTERED PROFESSIONAL ENGINEER KENDIK WAI KAN No. 9304 Exp. 8-30-00 ELECTRICAL STATE OF CALIFORNIA

KANRAD PROJECT NUMBER 16007

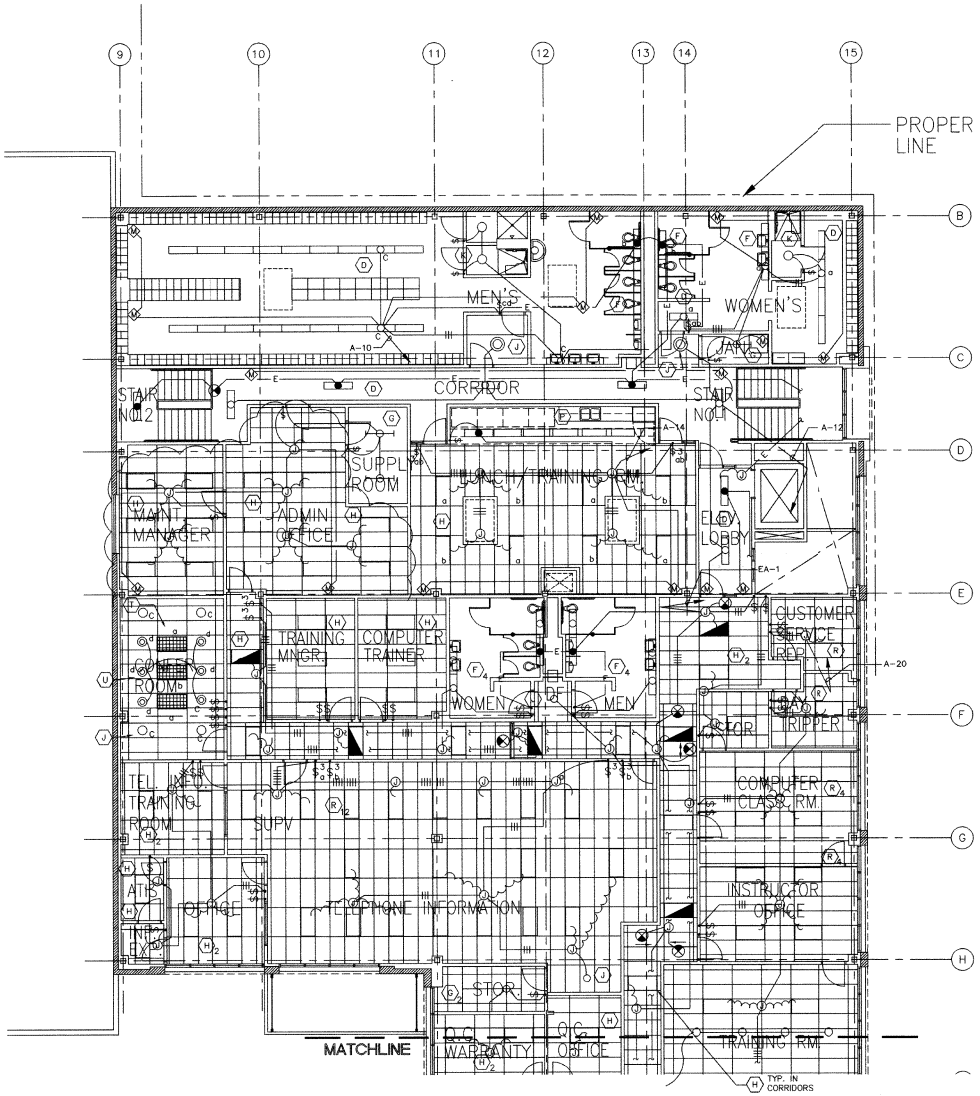

SECOND FLOOR LIGHTING PLAN 1 E11.3
1/8"=1'-0"

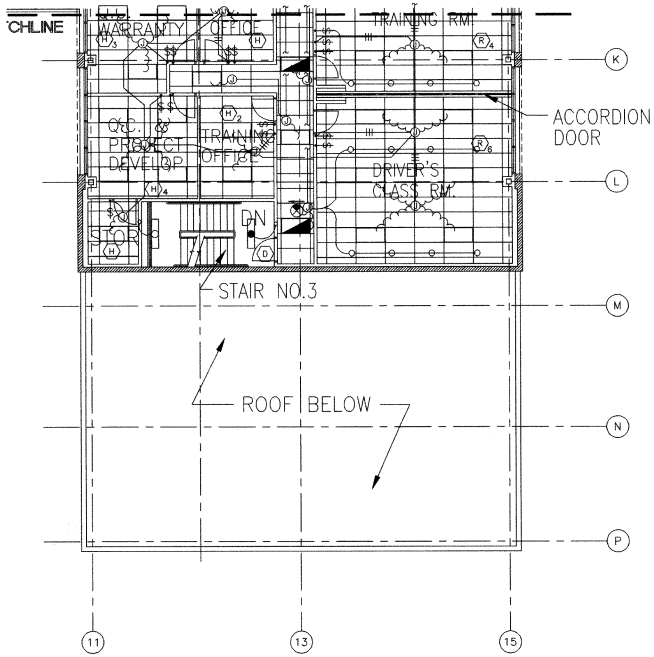

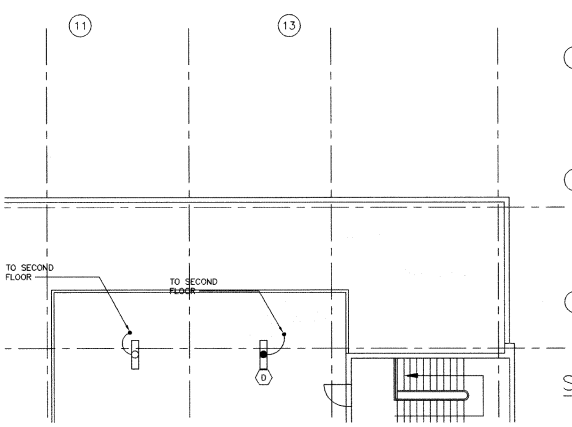

ROOF LEVEL LIGHTING PLAN 2 E11.3
1/8"=1'-0"

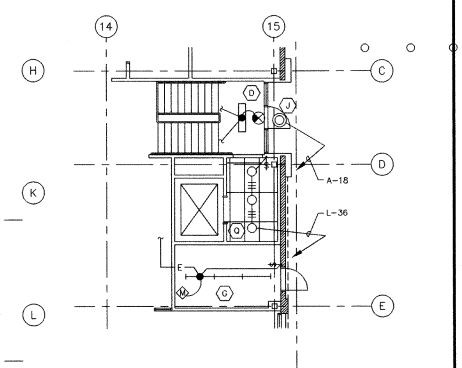

STREET LEVEL LIGHTING PLAN 3 E11.3
1/8"=1'-0"

AS-BUILT
Contract No. BUS-443B
Date NOV. 2000

REGISTERED PROFESSIONAL ENGINEER
KWOK WAI KAN
No. 9304
Exp. 9-30-01
ELECTRICAL
STATE OF CALIFORNIA

CONSTRUCTION CHANGE TABLE		
CHANGE	DATE	SHEET NUMBERS REVISED OR ADDED THIS CHANGE

STV Incorporated
ENGINEERS & PLANNERS
1055 WILSHIRE BLVD., SUITE 1455
LOS ANGELES, CA. 90017

	DATE
DESIGNED BY S. CONNER	11/98
DRAWN BY K. SPRADLING	11/98
CHECKED BY M. NIEDERHAUS	11/98
MTDB PRJ. ENG.	

MTDB
Metropolitan Transit Development Board
1255 Imperial Avenue, Suite 1000, San Diego, Ca. 92101-7490 (619)231-1466

IMPERIAL AVENUE DIVISION
BUS MAINTENANCE FACILITY

SECOND FLOOR LIGHTING PLAN

SCALE 1/8"=1'-0"
MTDB CONTRACT NO. BUS-443B
DRAWING NO. E11.3
SHEET NO. 82

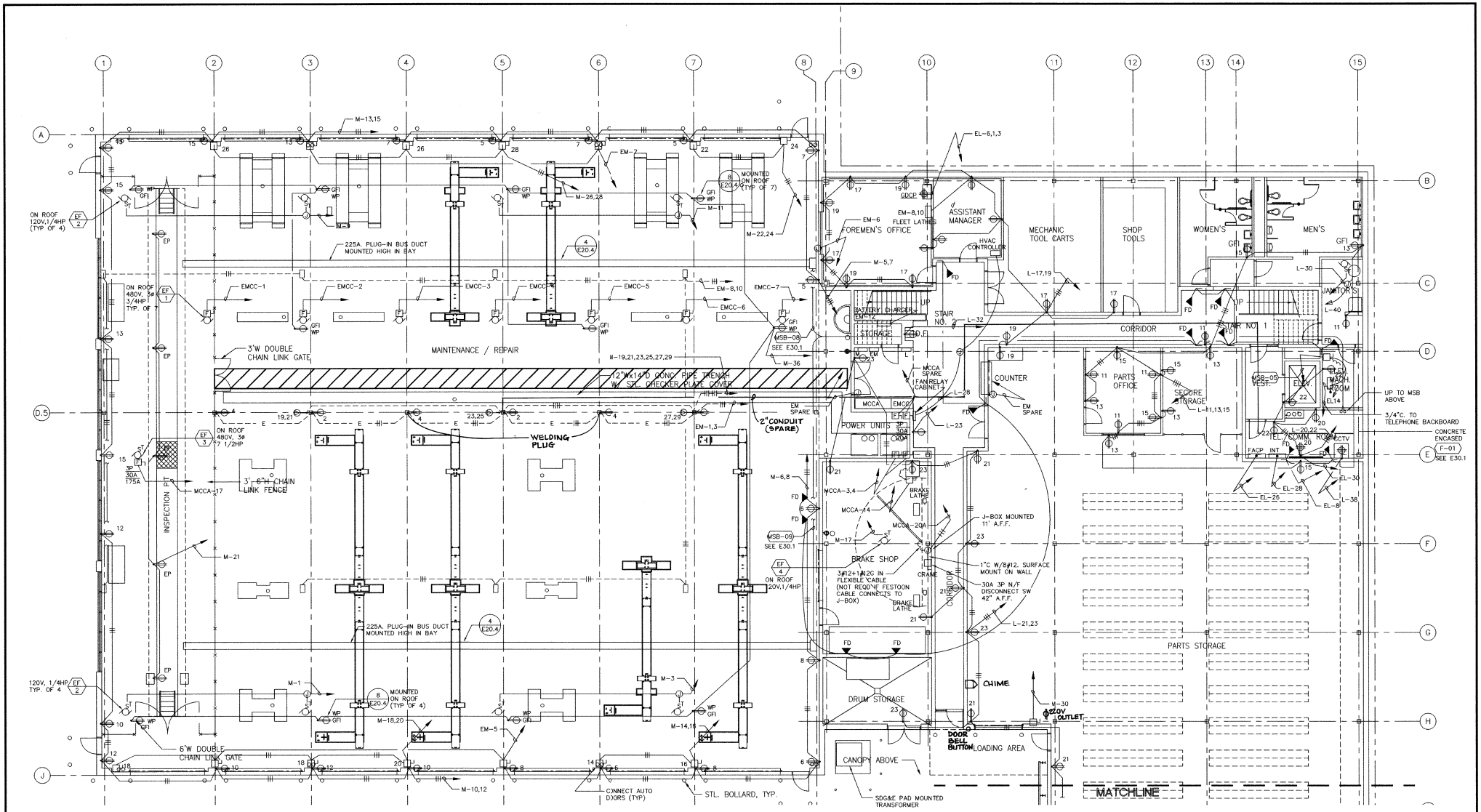

GROUND FLCOR NORTH POWER PLAN 1/8"=1'-0" (1 / E12.1)

AS-BUILT
Contract No. BUS-443B
Date NOV. 2000

CONSTRUCTION CHANGE TABLE		
CHANGE	DATE	SHEET NUMBERS REVISED OR ADDED THIS CHANGE

STV Incorporated
ENGINEERS & PLANNERS
1055 WILSHIRE BLVD., SUITE 1455
LOS ANGELES, CA 90017

DESIGNED BY	S. CONNER	DATE 11/98
DRAWN BY	K. SPRADLING	11/98
CHECKED BY	M. NIEDERHAUS	11/98
MTDB PRJ. ENG.		

MTDB
Metropolitan Transit Development Board
1255 Imperial Avenue, Suite 1000, San Diego, Ca. 92101-7490 (619)231-1466

IMPERIAL AVENUE DIVISION
BUS MAINTENANCE FACILITY

GROUND FLOOR NORTH POWER PLAN

SCALE	1/8"=1'-0"
MTDB CONTRACT NO.	BUS-443B
DRAWING NO.	E12.1
SHEET NO.	83

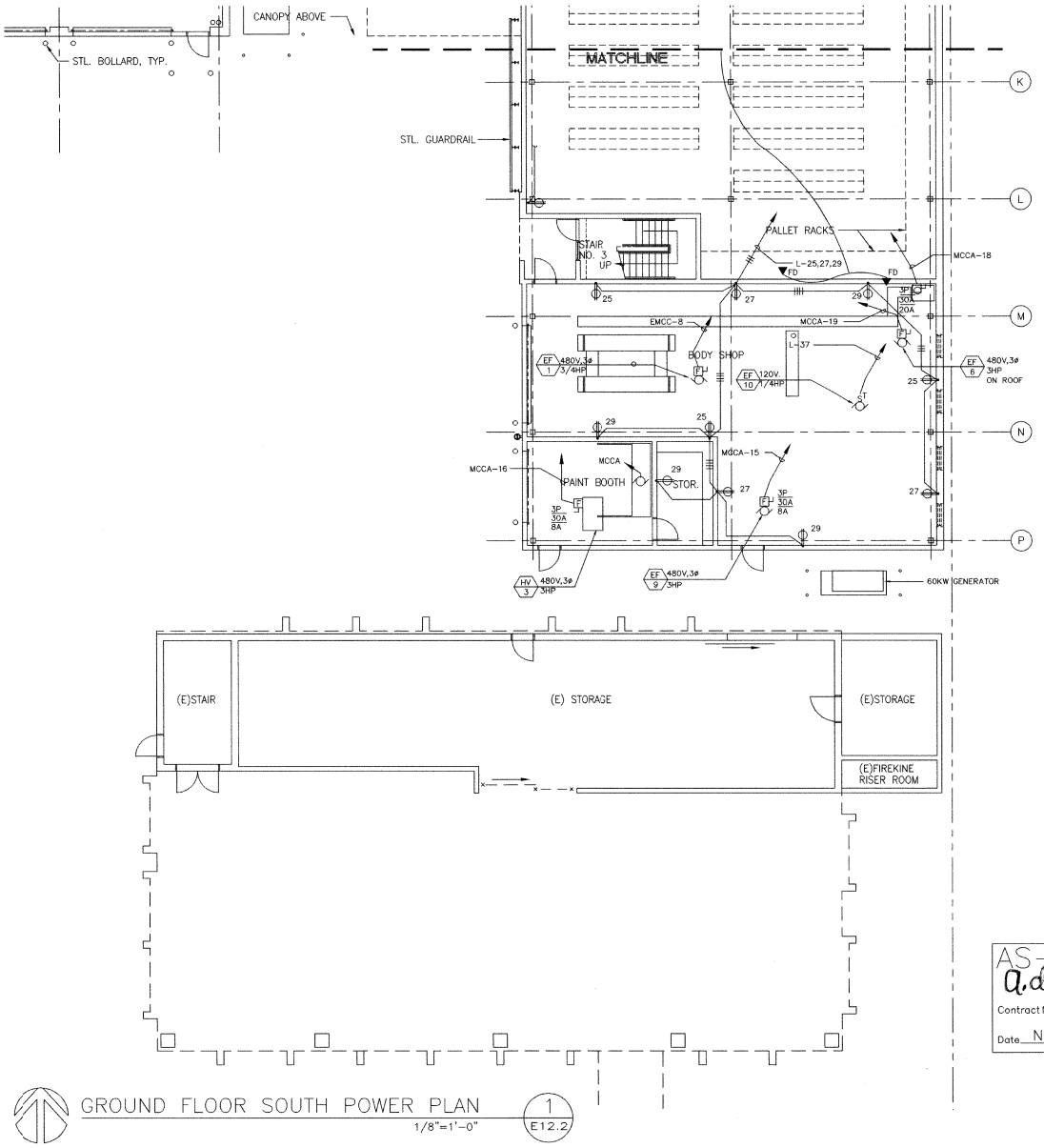

GROUND FLOOR SOUTH POWER PLAN 1/8"=1'-0" (1 / E12.2)

AS-BUILT
Contract No. BUS-443B
Date NOV. 2000

REGISTERED PROFESSIONAL ENGINEER No. 9304 Exp. 9-30-01 ELECTRICAL STATE OF CALIFORNIA

CONSTRUCTION CHANGE TABLE		
CHANGE	DATE	SHEET NUMBERS REVISED OR ADDED THIS CHANGE

STV Incorporated
ENGINEERS & PLANNERS
1055 WILSHIRE BLVD. SUITE 1455
LOS ANGELES, CA 90017

DESIGNED BY	S. CONNER	DATE 11/98
DRAWN BY	K. SPRADLING	11/98
CHECKED BY	M. NIEDERHAUS	11/98
MTDB PRJ. ENG.		

MTDB
Metropolitan Transit Development Board
1255 Imperial Avenue, Suite 1000, San Diego, Ca. 92101-7490 (619)231-1466

IMPERIAL AVENUE DIVISION
BUS MAINTENANCE FACILITY

GROUND FLOOR SOUTH POWER PLAN

SCALE	1/8"=1'-0"
MTDB CONTRACT NO.	BUS-443B
DRAWING NO.	E12.2
SHEET NO.	84

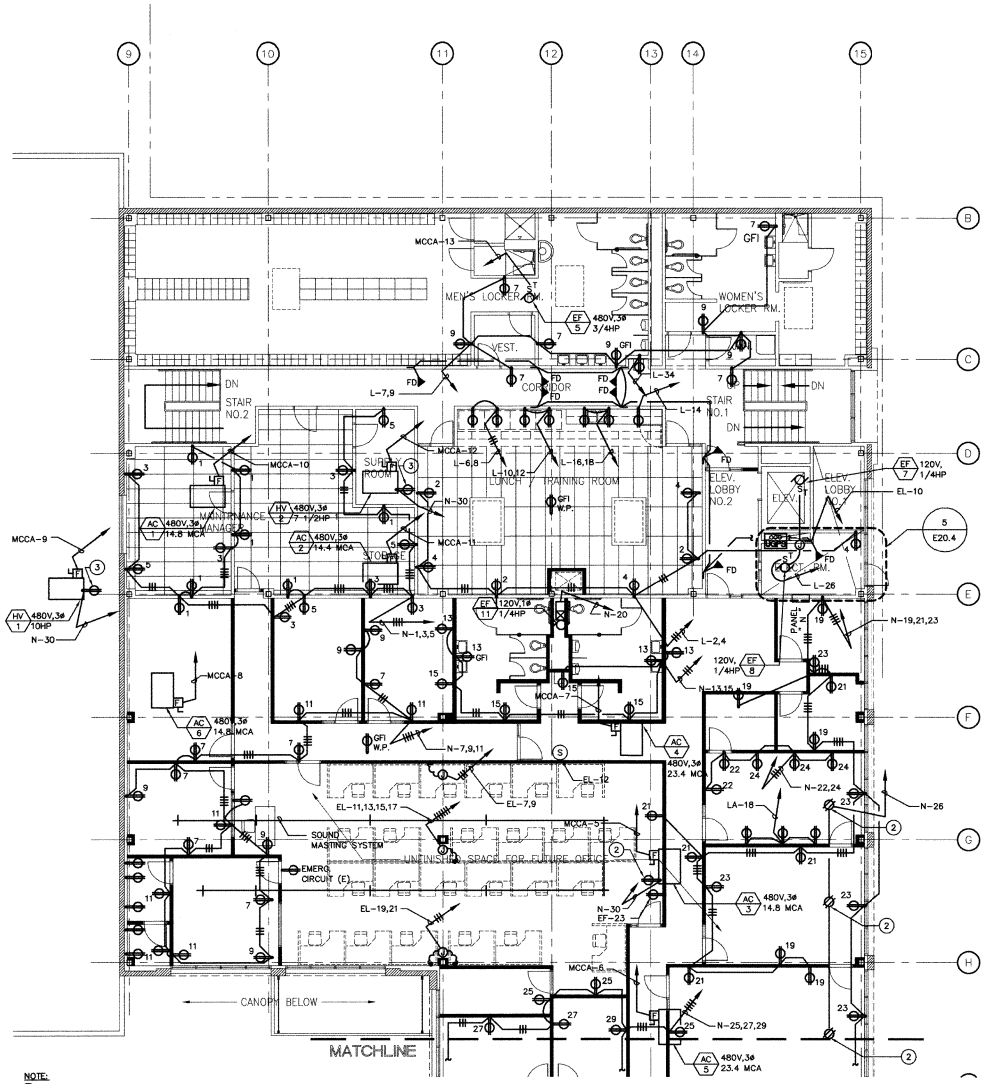

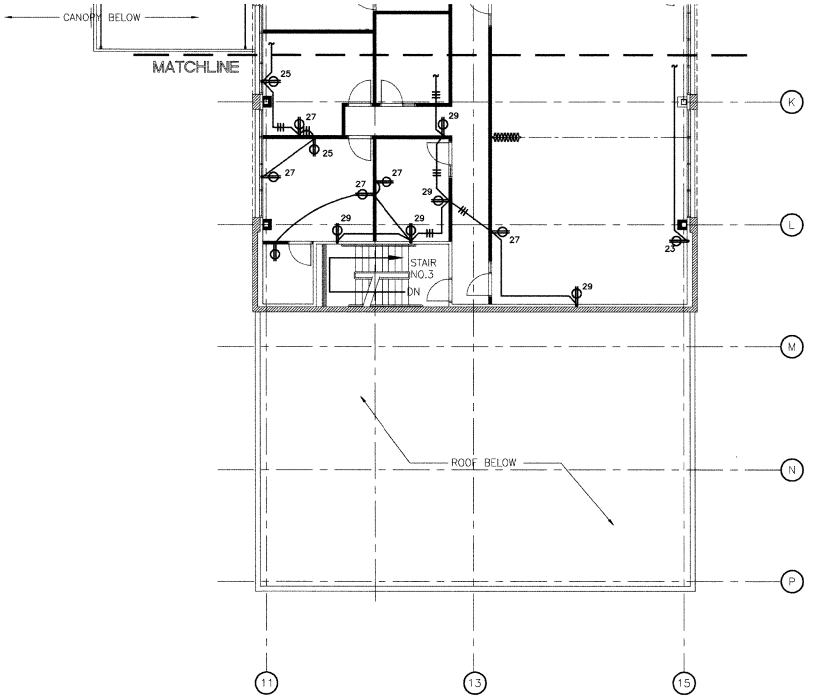

NOTE:
SEE MCC SCHEDULES FOR SWITCH AND FUSE SIZE FOR DISCONNECTS. ALL ROOF MOUNTED DISCONNECTS SHALL BE WEATHERPROOF.

NOTE:
1. CONNECT TO RECEPTACLE RACEWAY.
2. PROVIDE DUPLEX RECEPTACLE FLUSH IN CEILING FOR OVERHEAD PROJECTOR. VERIFY EXACT LOCATION WITH OWNER REPRESENTATIVE PRIOR TO INSTALLATION.
3. PROVIDE GROUND FAULT PROTECTED DUPLEX RECEPTACLE IN WEATHERPROOF ENCLOSURE, ON ROOF, PER MECHANICAL CODE.

SECOND FLOOR POWER PLAN 1/8"=1'-0" (1 / E12.3)

AS-BUILT
Contract No. BUS-443B
Date NOV. 2000

REGISTERED PROFESSIONAL ENGINEER — No. 9305 — ELECTRICAL — STATE OF CALIFORNIA

CONSTRUCTION CHANGE TABLE		
CHANGE	DATE	SHEET NUMBERS REVISED OR ADDED THIS CHANGE
4	4/17/00	SECOND FLOOR INTERIOR IMPROVEMENTS

KAMRAD PROJECT NUMBER 19007

STV Incorporated
ENGINEERS & PLANNERS
1000 WILSHIRE BLVD., SUITE 1455
LOS ANGELES, CA 90017

DESIGNED BY	M. NIEDERHAUS	6/00
DRAWN BY	K. SPRADLING	6/00
CHECKED BY	M. NIEDERHAUS	6/00
MTDB PRJ. ENG.		

MTDB
Metropolitan Transit Development Board
1255 Imperial Avenue, Suite 1000, San Diego, Ca. 92101-7490 (619)231-1466

IMPERIAL AVENUE DIVISION
BUS MAINTENANCE FACILITY

SECOND FLOOR POWER PLAN

SCALE	
1/8"=1'-0"	
MTDB CONTRACT NO.	
DRAWING NO. E12.3	SHEET NO. 85

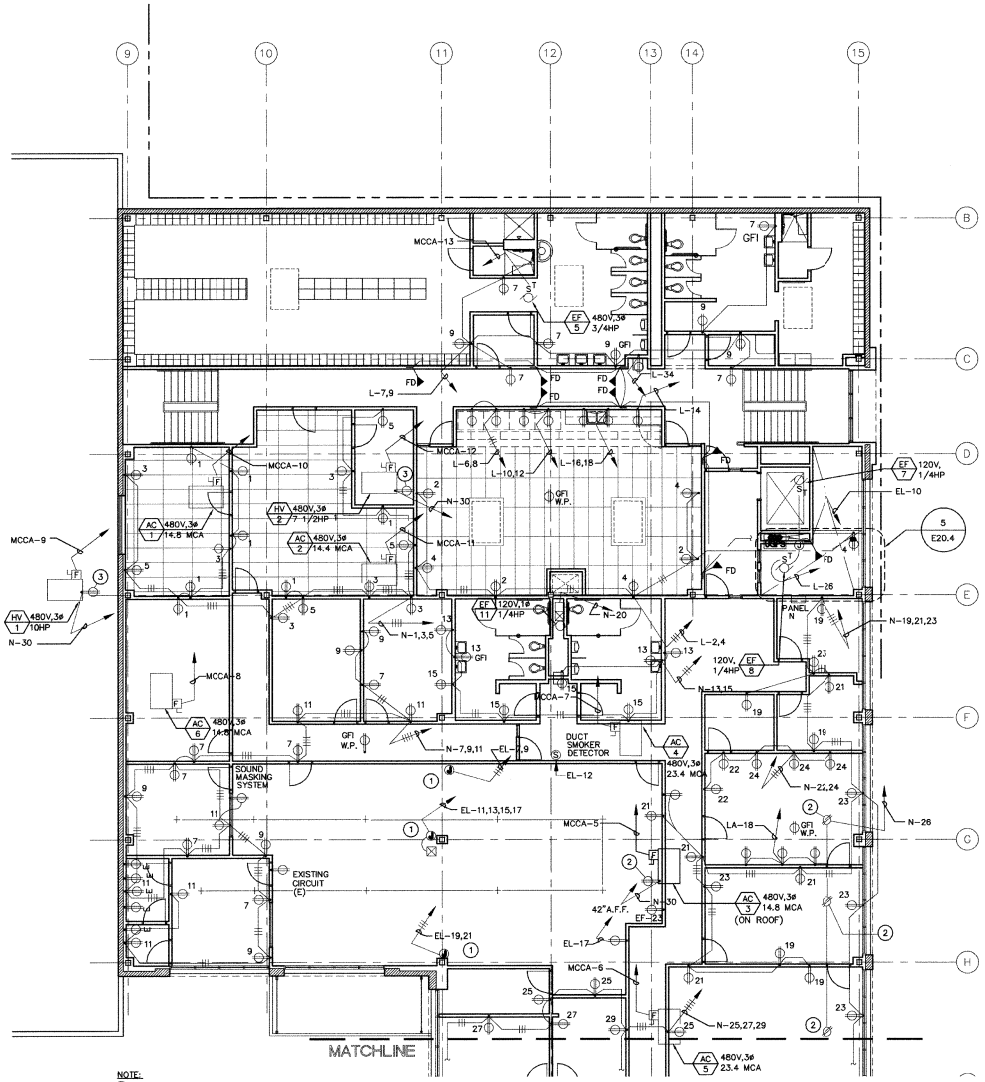

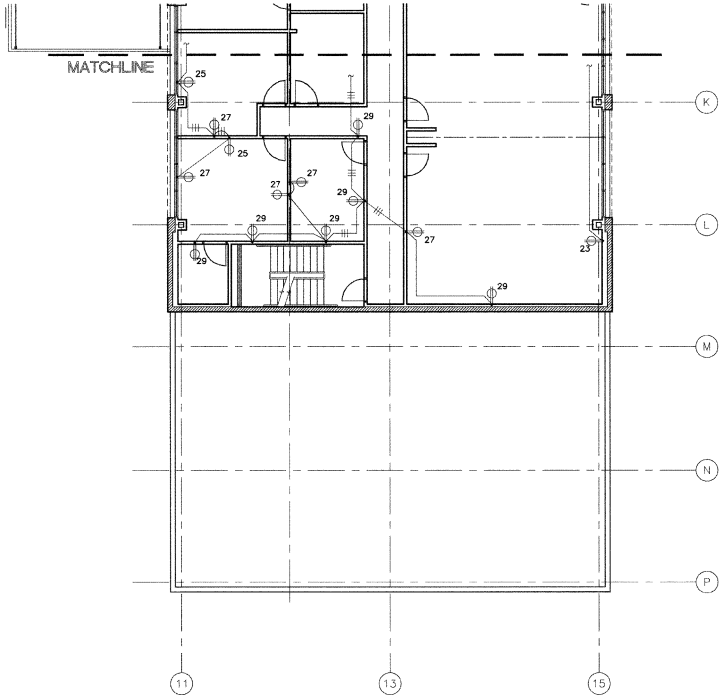

NOTE:
SEE MCC SCHEDULES FOR SWITCH AND FUSE SIZE FOR DISCONNECTS. ALL ROOF MOUNTED DISCONNECTS SHALL BE WEATHERPROOF.

NOTE:
1. CONNECT TO RECEPTACLE RACEWAY.
2. PROVIDE DUPLEX RECEPTACLE FLUSH IN CEILING FOR OVERHEAD PROJECTOR. VERIFY EXACT LOCATION WITH OWNER REPRESENTATIVE PRIOR TO INSTALLATION.
3. PROVIDE GROUND FAULT PROTECTED DUPLEX RECEPTACLE IN WEATHERPROOF ENCLOSURE, ON ROOF, PER MECHANICAL CODE.

SECOND FLOOR POWER PLAN 1 E12.3
1/8"=1'-0"

AS-BUILT
Contract No. BUS-443B
Date NOV. 2000

REGISTERED PROFESSIONAL ENGINEER KWOK WAI KAN No. 9304 Exp. 9-30-99 ELECTRICAL STATE OF CALIFORNIA

CONSTRUCTION CHANGE TABLE		
CHANGE	DATE	SHEET NUMBERS REVISED OR ADDED THIS CHANGE
1	4/17/00	SECOND FLOOR INTERIOR IMPROVEMENTS
2	8/2/00	ADDED ELECT OUTLETS

STV Incorporated
ENGINEERS & PLANNERS
1055 WILSHIRE BLVD., SUITE 1455
LOS ANGELES, CA. 90017

	DATE
DESIGNED BY S. CONNER	11/98
DRAWN BY K. SPRADLING	11/98
CHECKED BY M. NIEDERHAUS	11/98
MTDB PRJ. ENG.	

MTDB
Metropolitan Transit Development Board
1255 Imperial Avenue, Suite 1000, San Diego, Ca. 92101-7490 (619)231-1466

IMPERIAL AVENUE DIVISION
BUS MAINTENANCE FACILITY

SECOND FLOOR POWER PLAN

SCALE 1/8"=1'-0"
MTDB CONTRACT NO. BUS-443B
DRAWING NO. E12.3
SHEET NO. 85

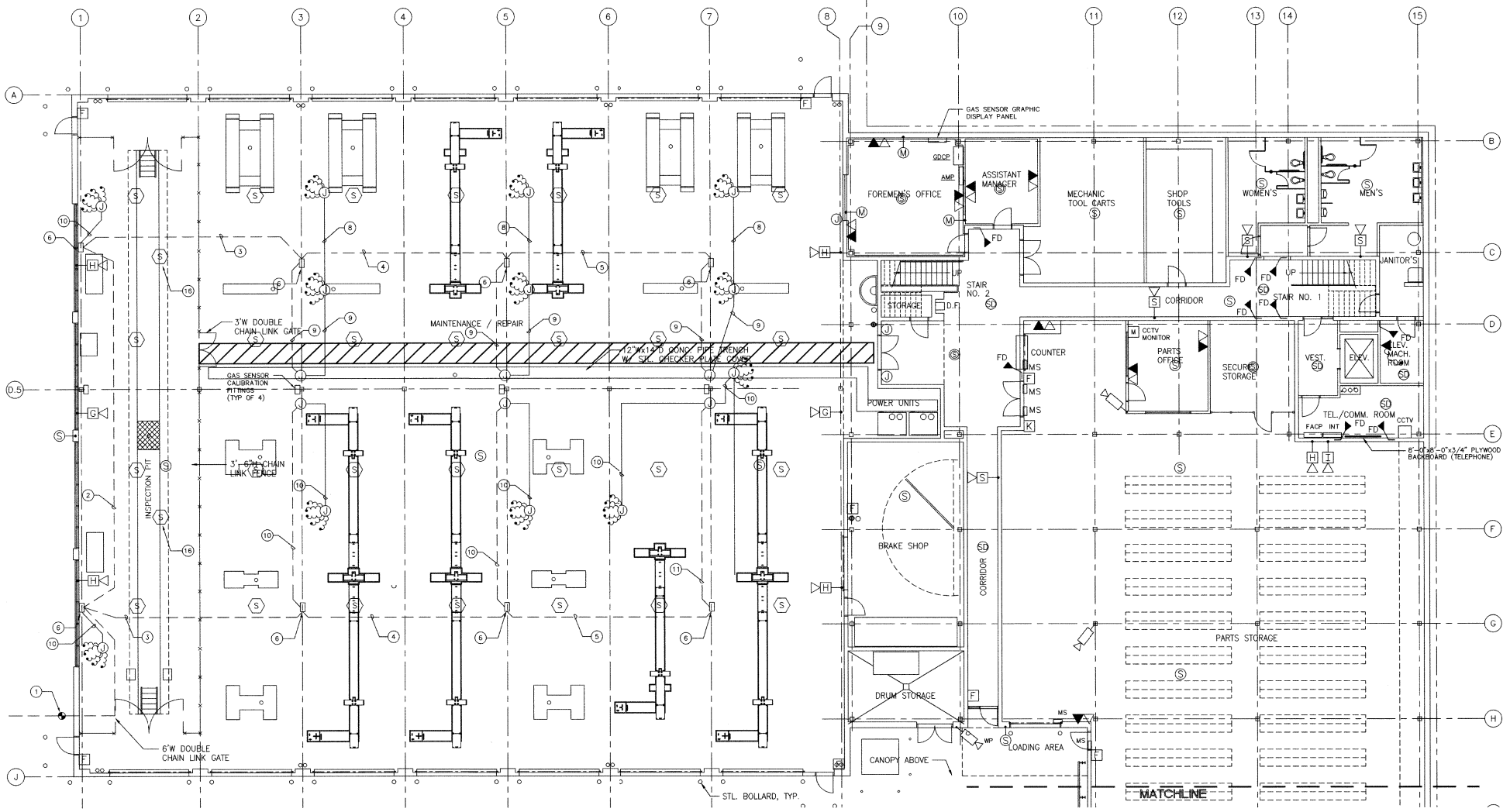

NOTE:
SEE NOTES AND GENERAL NOTES ON SHEET E20.1

GROUND FLOOR NORTH SIGNAL PLAN
1/8"=1'-0"
1
E13.1

NOTE:
FIRE ALARM SYSTEM AND DEVICES SHOWN ON THIS PLAN ARE FOR REFERENCE ONLY. COMPLETE PLANS AND SPECS FOR FIRE ALARM SYSTEM SHALL BE SUBMITTED TO THE FIRE DEPT. FOR REVIEW AND APPROVAL PRIOR TO INSTALLATION.

AS-BUILT
Contract No. BUS-443B
Date NOV. 2000

REGISTERED PROFESSIONAL ENGINEER
ANDREW WAI KAN
No. 9304
Exp. 8-30-91
ELECTRICAL
STATE OF CALIFORNIA

CONSTRUCTION CHANGE TABLE		
CHANGE	DATE	SHEET NUMBERS REVISED OR ADDED THIS CHANGE

STV Incorporated
ENGINEERS & PLANNERS
1055 WILSHIRE BLVD., SUITE 1455
LOS ANGELES, CA. 90017

	DATE
DESIGNED BY S. CONNER	11/98
DRAWN BY K. SPRADLING	11/98
CHECKED BY M. NIEDERHAUS	11/98
MTDB PRJ. ENG.	

MTDB
Metropolitan Transit Development Board
1255 Imperial Avenue, Suite 1000, San Diego, Ca. 92101-7490 (619)231-1466

IMPERIAL AVENUE DIVISION
BUS MAINTENANCE FACILITY

GROUND FLOOR NORTH SIGNAL PLAN

SCALE 1/8"=1'-0"
MTDB CONTRACT NO. BUS-443B
DRAWING NO. E13.1
SHEET NO. 86

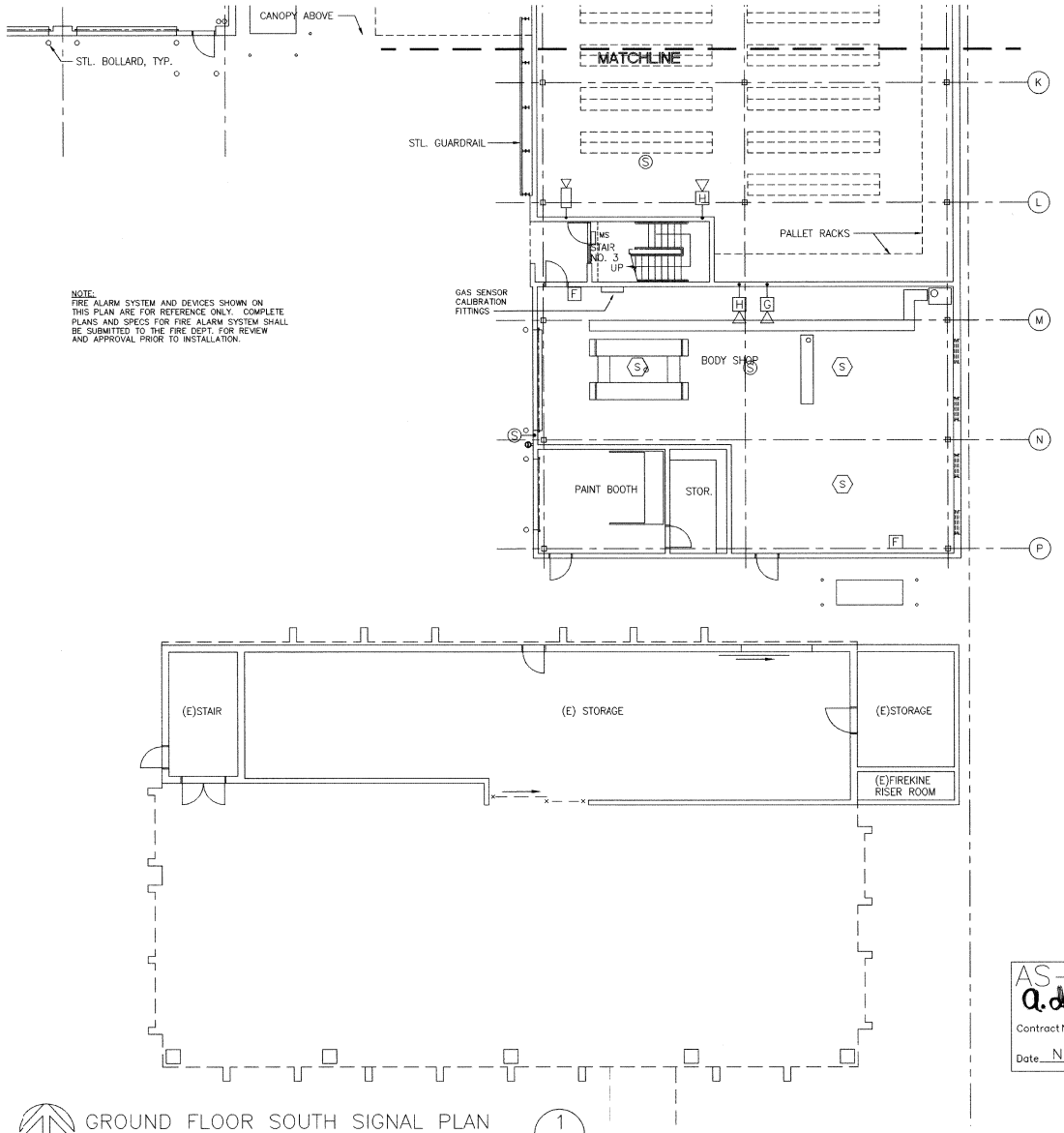

NOTE:
FIRE ALARM SYSTEM AND DEVICES SHOWN ON THIS PLAN ARE FOR REFERENCE ONLY. COMPLETE PLANS AND SPECS FOR FIRE ALARM SYSTEM SHALL BE SUBMITTED TO THE FIRE DEPT. FOR REVIEW AND APPROVAL PRIOR TO INSTALLATION.

GROUND FLOOR SOUTH SIGNAL PLAN
1/8"=1'-0"
1 / E13.2

AS-BUILT
Contract No. BUS-443B
Date NOV. 2000

REGISTERED PROFESSIONAL ENGINEER — MARK WAI KAN — No. 9304 — Exp. 6-30-01 — ELECTRICAL — STATE OF CALIFORNIA

CONSTRUCTION CHANGE TABLE		
CHANGE	DATE	SHEET NUMBERS REVISED OR ADDED THIS CHANGE

STV Incorporated
ENGINEERS & PLANNERS
1055 WILSHIRE BLVD., SUITE 1455
LOS ANGELES, CA 90017

DESIGNED BY	S. CONNER	DATE 11/98
DRAWN BY	K. SPRADLING	11/98
CHECKED BY	M. NIEDERHAUS	11/98
MTDB PRJ. ENG.		

MTDB
Metropolitan Transit Development Board
1255 Imperial Avenue, Suite 1000, San Diego, Ca. 92101-7490 (619)231-1466

IMPERIAL AVENUE DIVISION
BUS MAINTENANCE FACILITY

GROUND FLOOR SOUTH SIGNAL PLAN

SCALE 1/8"=1'-0"
MTDB CONTRACT NO. BUS-443B
DRAWING NO. E13.2
SHEET NO. 87

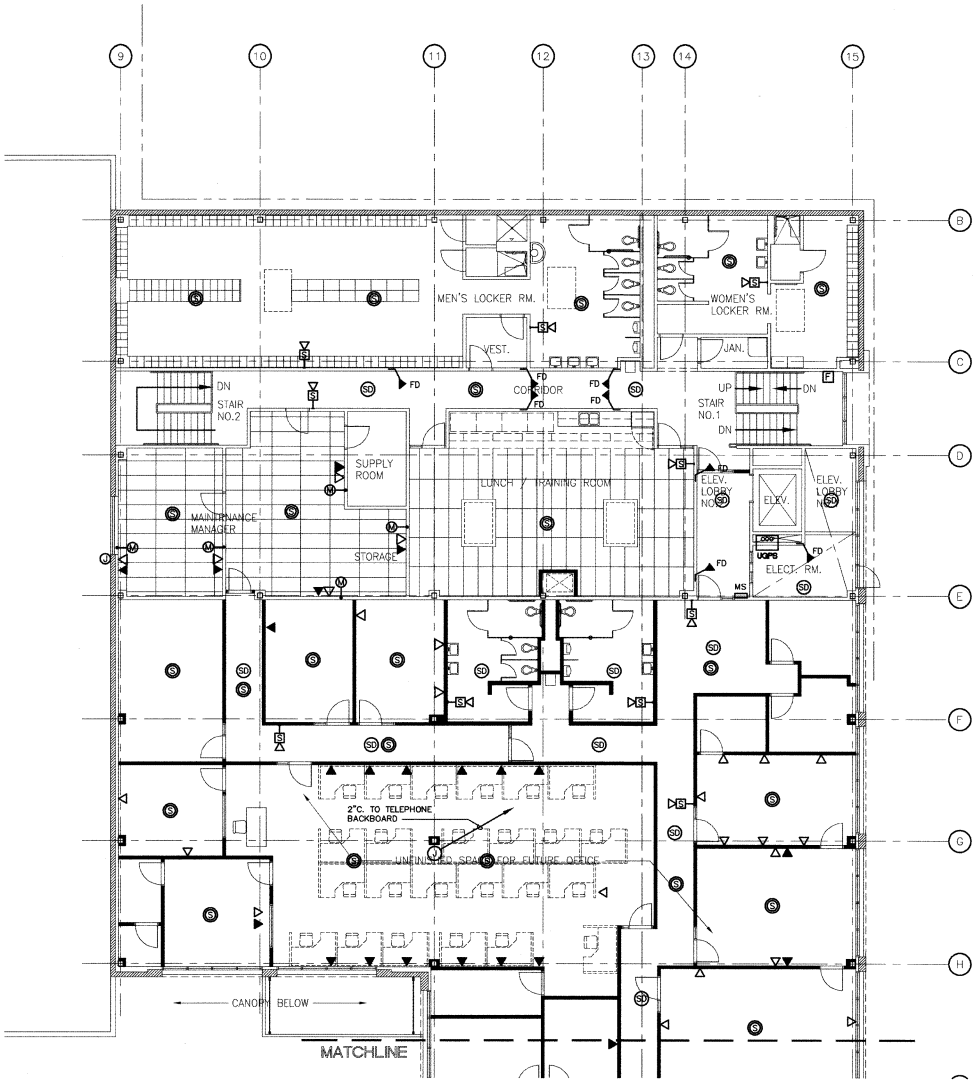

SECOND FLOOR SIGNAL PLAN 1 E13.3
1/8"=1'-0"

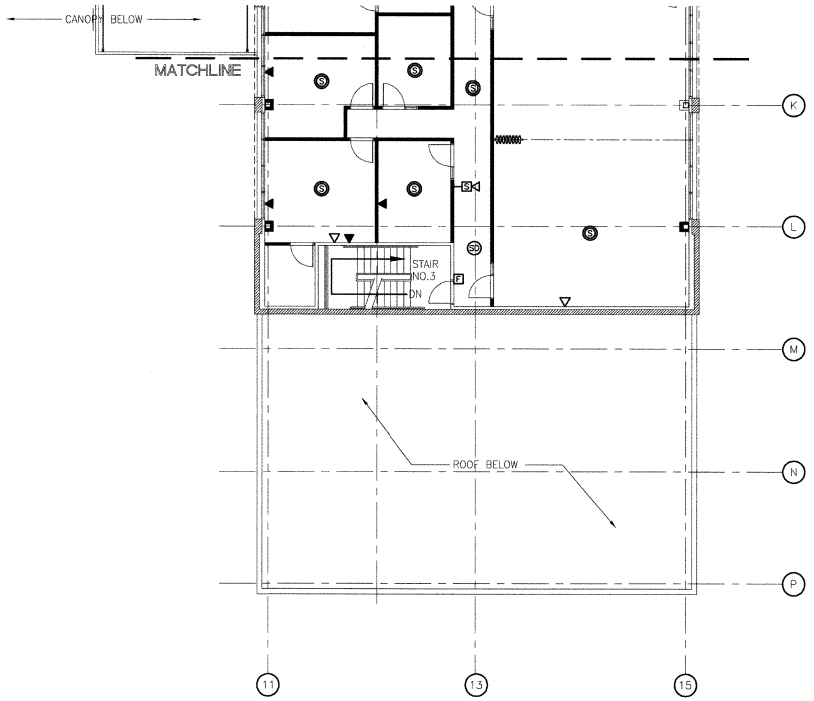

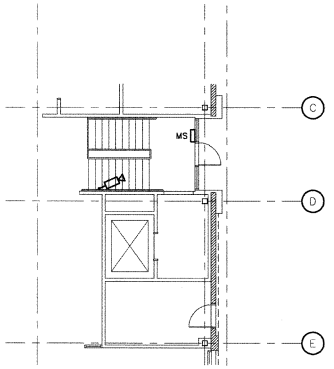

NOTES:

1. FIRE ALARM SYSTEM AND DEVICES SHOWN ON THIS PLAN ARE FOR REFERENCE ONLY. COMPLETE PLANS AND SPECS FOR FIRE ALARM SYSTEM SHALL BE SUBMITTED TO THE FIRE DEPT. FOR REVIEW AND APPROVAL PRIOR TO INSTALLATION.
2. ALL TELEPHONE OUTLETS SHALL HAVE 1/2"C. TO TELEPHONE BACKBOARD.

AS-BUILT
A. deTorres
Contract No BUS-443B
Date NOV. 2000

STREET LEVEL SIGNAL PLAN 2 E13.3
1/8"=1'-0"

REGISTERED PROFESSIONAL ENGINEER
ANDREW MAI KAN
No. 9304
Exp. 9-30-01
ELECTRICAL
STATE OF CALIFORNIA

CONSTRUCTION CHANGE TABLE		
CHANGE	DATE	SHEET NUMBERS REVISED OR ADDED THIS CHANGE
4	4/17/00	SECOND FLOOR INTERIOR IMPROVEMENTS

STV Incorporated
ENGINEERS & PLANNERS
1055 WILSHIRE BLVD., SUITE 1455
LOS ANGELES, CA. 90017

	DATE
DESIGNED BY M. NIEDERHAUS	6/00
DRAWN BY K. SPRADLING	6/00
CHECKED BY M. NIEDERHAUS	6/00
MTDB PRJ. ENG.	

MTDB
Metropolitan Transit Development Board
1255 Imperial Avenue, Suite 1000, San Diego, Ca. 92101-7490 (619)231-1466

IMPERIAL AVENUE DIVISION
BUS MAINTENANCE FACILITY

SECOND FLOOR SIGNAL PLAN

SCALE 1/8"=1'-0"
MTDB CONTRACT NO.
DRAWING NO. E13.3
SHEET NO. 88

KANRAD PROJECT NUMBER 19007

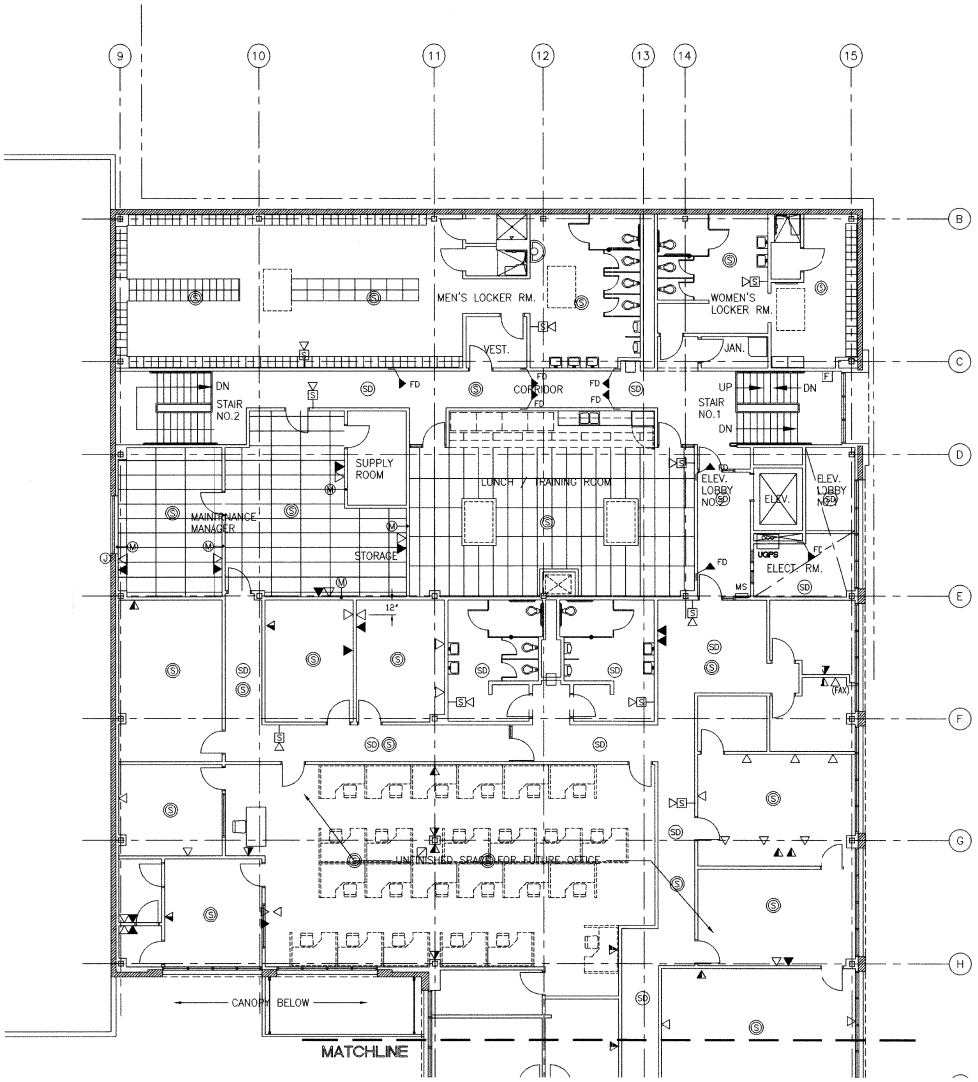

SECOND FLOOR SIGNAL PLAN 1/8"=1'-0" (1 / E13.3)

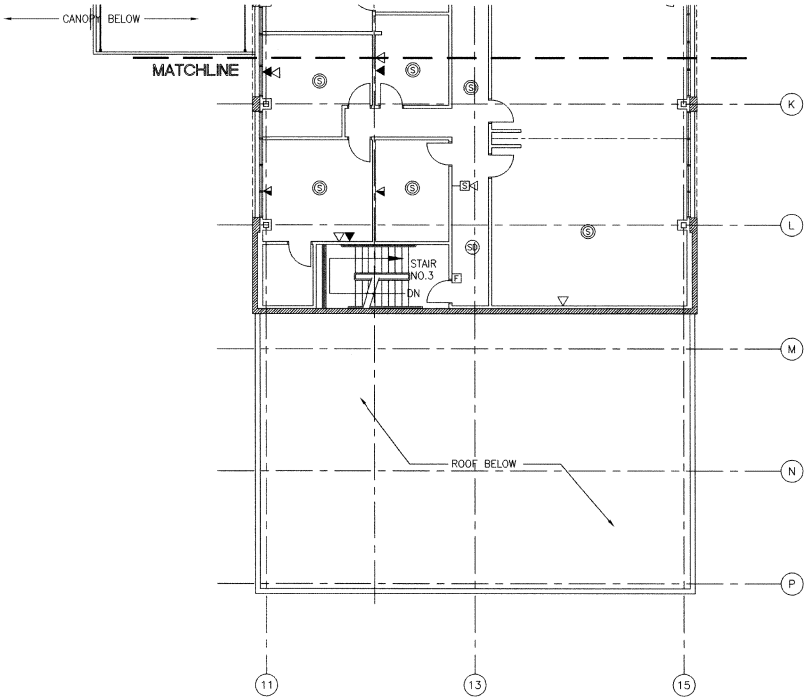

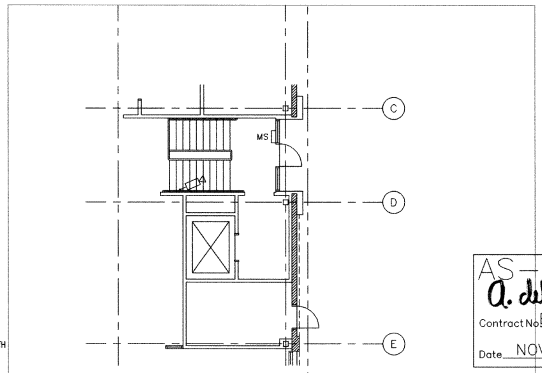

STREET LEVEL SIGNAL PLAN 1/8"=1'-0" (2 / E13.3)

NOTE:
FIRE ALARM SYSTEM AND DEVICES SHOWN ON THIS PLAN ARE FOR REFERENCE ONLY. COMPLETE PLANS AND SPECS FOR FIRE ALARM SYSTEM SHALL BE SUBMITTED TO THE FIRE DEPT. FOR REVIEW AND APPROVAL PRIOR TO INSTALLATION.

- TELEPHONE OUTLET 15" A.F.F. UNLESS OTHERWISE NOTED, WITH 1/2"C STUBBED ABOVE CEILING.
- COMPUTER DATA PORT 15" A.F.F. UNLESS OTHERWISE NOTED, WITH 1/2"C STUBBED ABOVE CEILING.
- DUPLEX TEL./ DATA PORT 15" A.F.F. UNLESS OTHERWISE NOTED, WITH 1/2"C STUBBED ABOVE CEILING.

AS-BUILT
Contract No. BUS-443B
Date NOV. 2000

REGISTERED PROFESSIONAL ENGINEER — No. 9304 — Exp. 6-30-01 — ELECTRICAL — STATE OF CALIFORNIA

CONSTRUCTION CHANGE TABLE		
CHANGE	DATE	SHEET NUMBERS REVISED OR ADDED THIS CHANGE
	8/2/00	REVISED TELEPHONE & DATA PORT OUTLETS

STV Incorporated
ENGINEERS & PLANNERS
1055 WILSHIRE BLVD., SUITE 1455
LOS ANGELES, CA 90017

DESIGNED BY	S. CONNER	DATE 11/98
DRAWN BY	K. SPRADLING	11/98
CHECKED BY	M. NIEDERHAUS	11/98
MTDB PRJ. ENG.		

MTDB
Metropolitan Transit Development Board
1255 Imperial Avenue, Suite 1000, San Diego, Ca. 92101-7490 (619)231-1466

IMPERIAL AVENUE DIVISION
BUS MAINTENANCE FACILITY

SECOND FLOOR SIGNAL PLAN

SCALE 1/8"=1'-0"
MTDB CONTRACT NO. BUS-443B
DRAWING NO. E13.3
SHEET NO. 88

LIGHTING FIXTURE SCHEDULE

TYPE	FIXTURE: FLUOR	FIXTURE: INCAN	FIXTURE: HPS	FIXTURE: LPS	FIXTURE: MH	FIXTURE: LED	VOLTS: 120	VOLTS: 277	VOLTS: 12	VOLTS: 480	LAMPS: NO.	LAMPS: TYPE	LAMPS: WATTS	MOUNTING: REC	MOUNTING: SURF	MOUNTING: PEND	MOUNTING: WALL	MOUNTING: POLE	DESCRIPTION	MFR & CATALOG NO.
A					X			X			1	250W M.H.	295			X			HIGH BAY INDUSTRIAL WITH BOROSILICATE GLASS OPTICS, 25% UPLIGHT & 75% DOWNLIGHT FIXTURE TO BE MOUNTED 20' A.F.F.	HOLOPHANE #CG250MPXXPDB
A1					X			X			1 1	250W M.H. 250W QUARTZ	295			X			SAME AS FIXTURE TYPE "A" EXCEPT WITH A QUARTZ RESTRIKE SYSTEM	HOLOPHANE #CG250MPXXPDB-ER
B	X							X			2	F32T8	62			X			2-LAMP INDUSTRIAL FLUORESCENT	LITHONIA #AF10232/277GEB10
C	X							X			2	F32T8	62	X					2-LAMP INDUSTRIAL FLUORESCENT	LITHONIA #AF10232/277GEB10
D	X							X			2	F32T8	62	X					2-LAMP PLASTIC WRAPAROUND FLUORESCENT	LITHONIA #LB232/277GEB10
E						X		X			–	LED	1				X		EXIT LIGHT WITH LED AND BATTERY PACK	LITHONIA #ELQMLEDSWIR120/277EL
F	X							X			2	F32T8	62				X		2-LAMP FLUORESCENT, WALL MOUNT AT CEILING	LITHONIA #WS232A12/277GEB10
G	X							X			1	F32T8	31	X					2-LAMP FLUORESCENT STRIP	LITHONIA #C232/277GEB10
H	X							X			2	F32T8	62	X					2x4 FLUORESCENT LAY-IN	LITHONIA #2GT232A12/277GEB10SSR
I			X					X			1	250W HPS	295				X		HIGH PRESSURE SODIUM WALL PACK	LITHONIA #TWH250S277
J	X							X			1	26DTT	31	X					6" OPEN DOWNLIGHT, DAMP LOCATION LABEL	LITHONIA #AF1/26DTTGAR277GEB
K	X							X			2	26DTT	62	X					7" ROUND LENSED SHOWER LIGHT	LITHONIA #LGF2/26DTT7RWFFL277GEB
L					X			X			1	250W MH	295				X		42 FOOT LONG LIGHT PIPE CLASS 1, DIVISION 2, GROUP D	TIR #T8400
M		X						X			1	100W IF	100				X		PORCELAIN SOCKET WITH WIRE GUARD	LEVITON #9875
N	X							X			2	F32T8	62	X					2-LAMP FLUORESCENT CLASS-1, DIVISION 1, GROUP D	APPLETON #ARS232-277
P	X							X			1	F32T8	31	X					1x4 FLUORESCENT LAY-IN	LITHONIA #2FT132A12/277GEB10SSR
O		X						X			1	50W MR16	50			X			GLASS RLM WITH AIRCRAFT CABLE HANGER FIXTURE AT +8'-0"	LSI #CRYBD 50HL 12V OQ CH72BLK SWAG

NOTES

1. INTERCEPT EXISTING UNDERGROUND CONDUIT FROM EXISTING FLEET WATCH CONTROLLER C50 LOCATED IN BUILDING 4. EXTEND TO REMOTE ISLAND HEAD UNIT WITH 1 1/4". PROVIDE NEW (8) 3 TSP #18.
2. PROVIDE NEW 1"C-(4) 3 TSP #18.
3. PROVIDE NEW 3/4"C-(3) 3 TSP #18.
4. PROVIDE NEW 3/4"C-(2) 3 TSP #18.
5. PROVIDE NEW 3/4"C-(1) 3 TSP #18.
6. PROVIDE REMOTE ISLAND HEAD UNIT (FLEET WATCH R1H20) MOUNT AT +4'-6" AFF ON GALVANIZED "C" CHANNEL MOUNTING BRACKET TO FLOOR (TYPICAL).
7. CONNECT EACH FLUID SOLENOID WITH 1/2" FLEX 2#14 AND EACH PULSE METER WITH 1/2" FLEX CONDUIT WITH 2#18. TYPICAL ALL LOCATIONS. FLUID SOLENOID & PULSE METER PROVIDED UNDER DIVISION 15.
8. PROVIDE 3/4"C-8#14, 8#18.
9. PROVIDE 1"C-18#14, 18#18.
10. PROVIDE 3/4"C-10#14, 10#18.
11. PROVIDE 1 1/4"C-20#14, 20#18.
12. NOT USED.
13. NOT USED.
14. NOT USED.
15. NOT USED.
16. PROVIDE GAS SENSORS IN PIT.

GENERAL NOTES

1. COORDINATE INSTALLATION OF FLEET WATCH SYSTEM WITH S & A SYSTEM, INC. MR. JAMES SRYGLEY (972) 722-1009.
2. MODIFY SOFTWARE IN EXISTING FLEET WATCH CONTROLLER C50 LOCATED IN BUILDING 4 TO ACCEPT NEW ISLAND HEAD UNITS, FLUID SOLENOIDS AND PULSE METERS.

RISER DIAGRAM - TELEPHONE

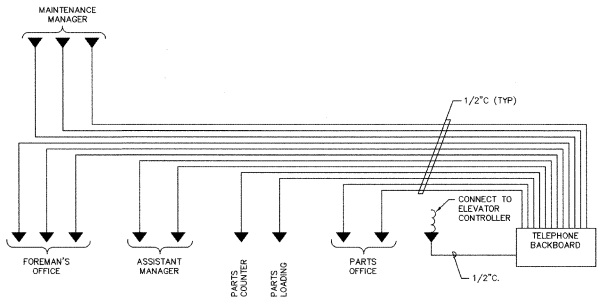

RISER DIAGRAM - DATA

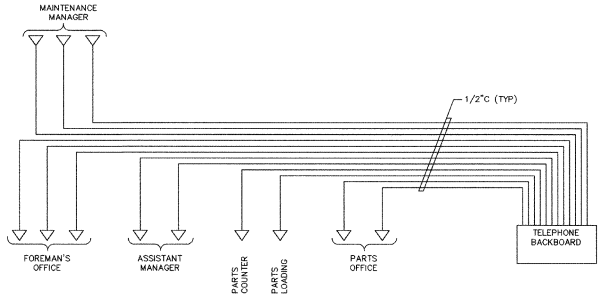

AS-BUILT
A. Debrand
Contract No BUS-443B
Date NOV. 2000

REGISTERED PROFESSIONAL ENGINEER — ANDREW WAI KAN — No. 9304 — Exp. 6-30-01 — ELECTRICAL — STATE OF CALIFORNIA

CONSTRUCTION CHANGE TABLE

CHANGE	DATE	SHEET NUMBERS REVISED OR ADDED THIS CHANGE

STV Incorporated
ENGINEERS & PLANNERS
1055 WILSHIRE BLVD., SUITE 1455
LOS ANGELES, CA 90017

DESIGNED BY	S. CONNER	11/98
DRAWN BY	K. SPRADLING	11/98
CHECKED BY	M. NIEDERHAUS	11/98
MTDB PRJ. ENG.		

MTDB
Metropolitan Transit Development Board
1255 Imperial Avenue, Suite 1000, San Diego, Ca. 92101-7490 (619)231-1466

IMPERAIAL AVENUE DIVISION
BUS MAINTENANCE FACILITY

FIXTURE SCHEDULE & RISER DIAGRAMS

SCALE: NONE
MTDB CONTRACT NO.: BUS-443B
DRAWING NO.: E20.1
SHEET NO.: 89

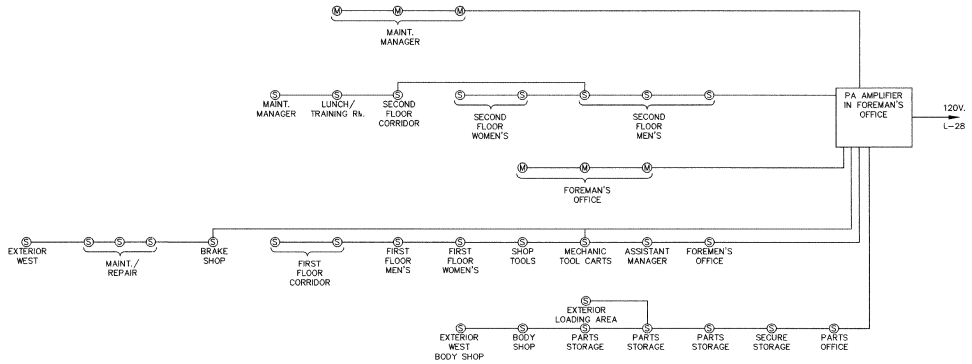

RISER DIAGRAM – P.A. SYSTEM (1 / E20.2)

NONE

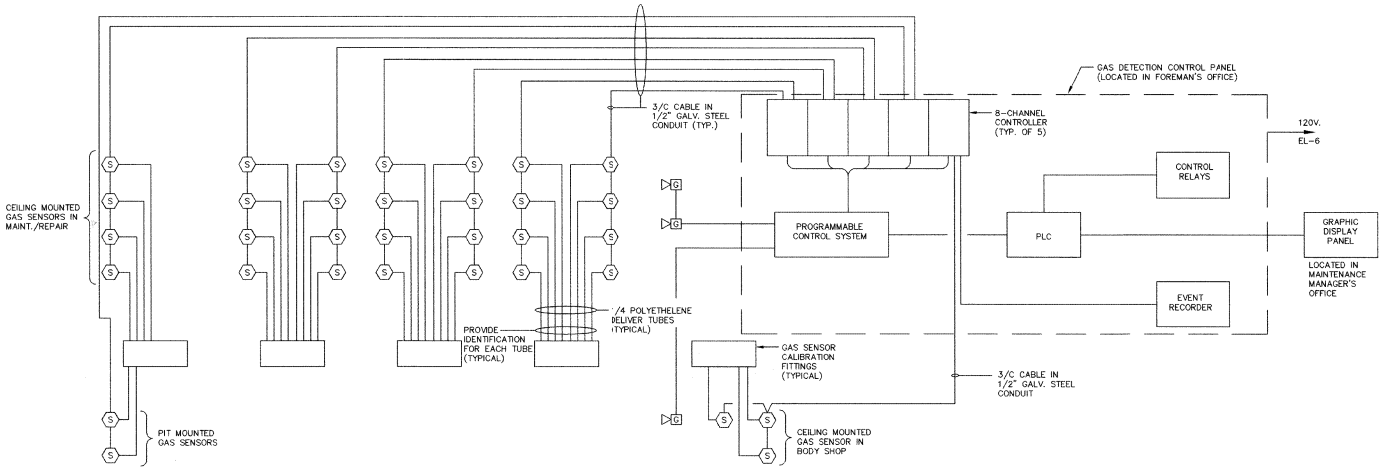

RISER DIAGRAM – CNG. DETECTION SYSTEM (2 / E20.2)

NONE

NOTE:
PROVIDE CONTROL CONTACTS AND WIRING TO SELECTED MOTOR STARTERS AND OPERATIONS. SEE SEQUENCE OF OPERATION.

CNG DETECTION SYSTEM NOTES:

1. CONTRACTOR SHALL SUBMIT COMPLETE PLANS AND SPECIFICATIONS FOR THE CNG DETECTION SYSTEM TO THE CITY OF SAN DIEGO FIRE DEPARTMENT FOR REVIEW AND APPROVAL PRIOR TO INSTALLATION. PROVIDE PERMIT NUMBER: TA _____

SEQUENCES OF OPERATION

1. LOW LEVEL ALARM (20% LEL) –
   - SOUND ALL GAS ALARM HORNS (95db) AND STROBES.
   - TURN ON ALL GAS EVACUATION EXHAUST FANS IN MAINTENANCE/REPAIR AND BODY SHOP.
   - TURN OFF ALL REGULAR EXHAUST FANS IN MAINTENANCE/ REPAIR AND BODY SHOP.
   - ACTIVATE SELECTED ROLL UP DOORS TO OPEN POSITION. (DOORS ON EMERGENCY POWER)
2. HIGH LEVEL ALARM (40% LEL) –
   - SHUNT TRIP ALL CIRCUIT BREAKERS ON CIRCUITS TO MAINTENANCE/REPAIR AND BODY SHOP.

AS-BUILT
A. deBeard
Contract No BUS-443B
Date NOV. 2000

REGISTERED PROFESSIONAL ENGINEER No. 9304 Exp. 8-30-01 ELECTRICAL STATE OF CALIFORNIA

CONSTRUCTION CHANGE TABLE		
CHANGE	DATE	SHEET NUMBERS REVISED OR ADDED THIS CHANGE

STV Incorporated
ENGINEERS & PLANNERS
1055 WILSHIRE BLVD. SUITE 1455
LOS ANGELES, CA 90017

DESIGNED BY S. CONNER	DATE 11/98	
DRAWN BY K. SPRADLING	11/98	
CHECKED BY M. NIEDERHAUS	11/98	
MTDB PRJ. ENG.		

MTDB
Metropolitan Transit Development Board
1255 Imperial Avenue, Suite 1000, San Diego, Ca. 92101-7490 (619)231-1466

IMPERIAL AVENUE DIVISION
BUS MAINTENANCE FACILITY

RISER DIAGRAMS

SCALE	NONE
MTDB CONTRACT NO.	BUS-443B
DRAWING NO. E20.2	SHEET NO. 90

NOTE:
FIRE ALARM SYSTEM AND DEVICES SHOWN ON THIS PLAN ARE FOR REFERENCE ONLY. COMPLETE PLANS AND SPECS FOR FIRE ALARM SYSTEM SHALL BE SUBMITTED TO THE FIRE DEPT. FOR REVIEW AND APPROVAL PRIOR TO INSTALLATION.

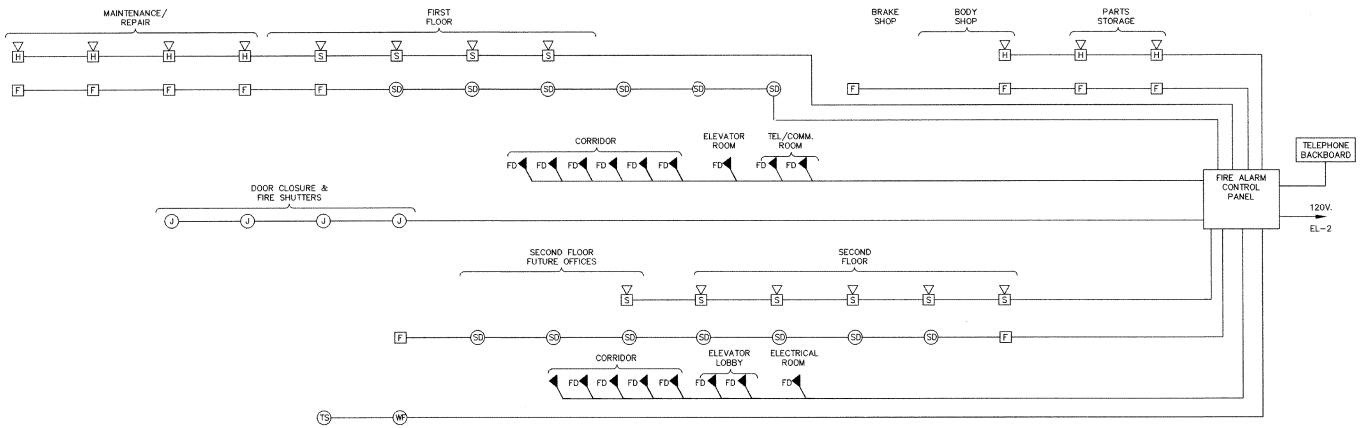

RISER DIAGRAM – FIRE ALARM SYSTEM (1 / E20.3)
NONE

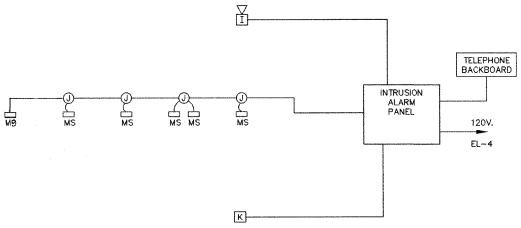

RISER DIAGRAM – INTRUSION ALARM SYSTEM (2 / E20.3)
NONE

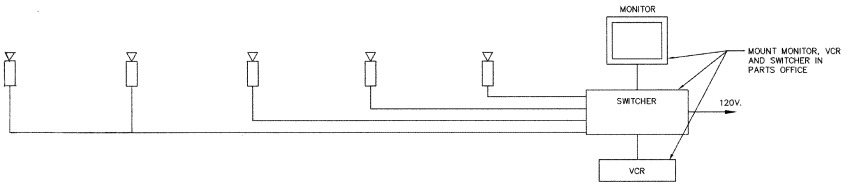

RISER DIAGRAM – CCTV SYSTEM (3 / E20.3)
NONE

AS-BUILT
A. duBrual
Contract No. BUS-443B
Date NOV. 2000

REGISTERED PROFESSIONAL ENGINEER No. 9304 Exp. 8-30-01 ELECTRICAL STATE OF CALIFORNIA

CONSTRUCTION CHANGE TABLE		
CHANGE	DATE	SHEET NUMBERS REVISED OR ADDED THIS CHANGE

STV Incorporated
ENGINEERS & PLANNERS
1055 WILSHIRE BLVD., SUITE 1455
LOS ANGELES, CA 90017

DESIGNED BY	S. CONNER	11/98
DRAWN BY	K. SPRADLING	11/98
CHECKED BY	M. NIEDERHAUS	11/98
MTDB PRJ. ENG.		

MTDB
Metropolitan Transit Development Board
1255 Imperial Avenue, Suite 1000, San Diego, Ca. 92101-7490 (619)231-1466

IMPERIAL AVENUE DIVISION
BUS MAINTENANCE FACILITY

RISER DIAGRAMS

SCALE: NONE
MTDB CONTRACT NO.: BUS-443B
DRAWING NO.: E20.3
SHEET NO.: 91

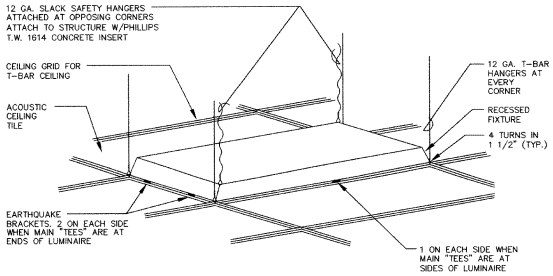

SEISMIC RESTRAINT SUPPORT DETAIL 1 — NONE — E20.4

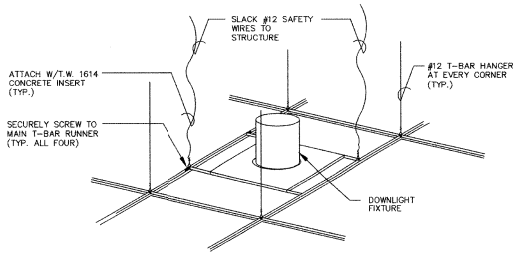

SEISMIC RESTRAINT SUPPORT DETAIL 2 — NONE — E20.4

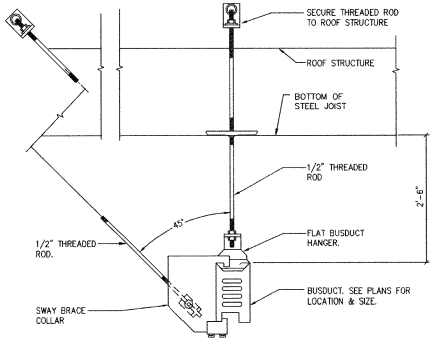

BUS DUCT SUPPORT DETAIL 4 — NONE — E20.4

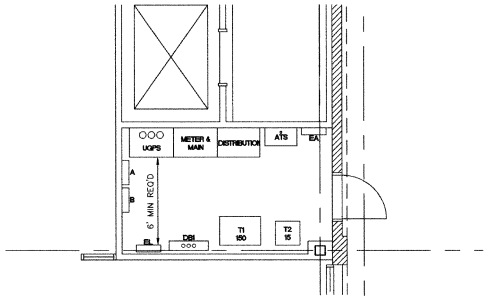

NOTE: PANELS A,B & EL SHALL BE LOCATED TO NOT ENCROACH WITHIN SDG&E REQUIRED WORKING SPACE IN FRONT OF UGPS

ELECTRICAL ROOM ENLARGED PLAN 5 — SCALE: 1/4" = 1'-0" — E20.4

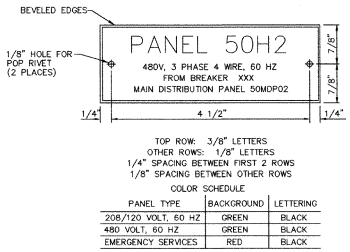

TOP ROW: 3/8" LETTERS
OTHER ROWS: 1/8" LETTERS
1/4" SPACING BETWEEN FIRST 2 ROWS
1/8" SPACING BETWEEN OTHER ROWS

COLOR SCHEDULE

PANEL TYPE	BACKGROUND	LETTERING
208/120 VOLT, 60 HZ	GREEN	BLACK
480 VOLT, 60 HZ	GREEN	BLACK
EMERGENCY SERVICES	RED	BLACK

REQUIRED DATA
FIRST LINE: PANEL DESIGNATION
SECOND LINE: PHASE, VOLTAGE, FREQUENCY
THIRD & FOURTH LINES: POWER SOURCE & BREAKER
XXX = BASED ON FINAL DESIGN SHOP DRAWING

PANELBOARD NAMEPLATE DETAIL 6 — NONE — E20.4

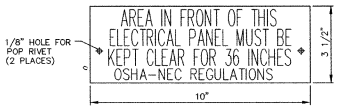

TOP 3 ROWS: 3/4" LETTERS
BOTTOM ROW: 1/2" LETTERS
BLACK LETTERING ON WHITE BACKGROUND

OSHA/NEC PLCARD DETAIL 7 — NONE — E20.4

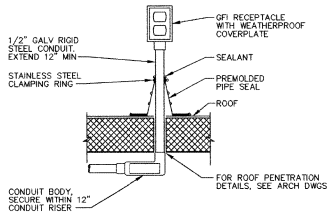

RECEPTACLE AT ROOF DETAIL 8 — NONE — E20.4

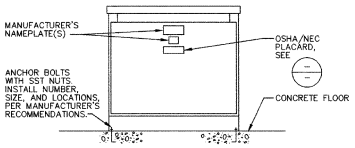

TRANSFORMER DETAIL 9 — NONE — E20.4

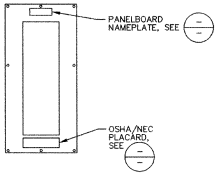

TYP. PANELBOARD DOOR 10 — NONE — E20.4

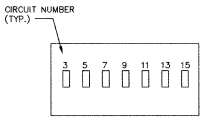

MAINTENANCE BAY SWITCHES 11 — NONE — E20.4

AS-BUILT
Contract No. BUS-443B
Date NOV. 2000

REGISTERED PROFESSIONAL ENGINEER — BRIAN MAY TAN — No. 9304 — Exp. 9-30-01 — ELECTRICAL — STATE OF CALIFORNIA

CONSTRUCTION CHANGE TABLE		
CHANGE	DATE	SHEET NUMBERS REVISED OR ADDED THIS CHANGE
1	9/29/99	CHG DOOR SWING, ADD NOTES, RM 208

STV Incorporated
ENGINEERS & PLANNERS
1055 WILSHIRE BLVD., SUITE 1455
LOS ANGELES, CA 90017

DESIGNED BY	S. CONNER	DATE 11/98
DRAWN BY	K. SPRADLING	11/98
CHECKED BY	M. NIEDERHAUS	11/98
MTDB PRJ. ENG.		

MTDB
Metropolitan Transit Development Board
1255 Imperial Avenue, Suite 1000, San Diego, Ca. 92101-7490 (619)231-1466

IMPERIAL AVENUE DIVISION
BUS MAINTENANCE FACILITY

DETAILS AND ENLARGED PLAN

SCALE	NONE
MTDB CONTRACT NO.	BUS-443B
DRAWING NO.	E20.4
SHEET NO.	92

FEEDER SCHEDULE

NO.	CONDUIT QUANTITY	CONDUIT SIZE	CONDUCTORS (EACH CONDUIT)	FROM	TO
F-01	3	5"	BY POWER CO.	PAD MOUNT TRANS.	MAIN SWITCHBOARD "MSB"
MSB-01	1	1 1/4"	4#2, 1#8 GND.	MAIN SWITCHBOARD "MSB"	PANEL "A"
MSB-02	1	1 1/4"	4#2, 1#8 GND.	MAIN SWITCHBOARD "MSB"	PANEL "B"
MSB-04	1	2 1/2"	4#350MCM, 1#4	MAIN SWITCHBOARD "MSB"	MOTOR CONTROL CENTER MCCA
MSB-05	1	1"	3#4, 1#8 GND.	MAIN SWITCHBOARD "MSB"	ELEVATOR
MSB-06	1	2"	3#4/0, 1#4 GND.	MAIN SWITCHBOARD "MSB"	TRANS. T1
MSB-07	1	1 1/4"	4#2, 1#8 GND.	MAIN SWITCHBOARD "MSB"	AUTOMATIC TRANSFER SWITCH
MSB-08	1	2"	4#3/0, 1#4 GND.	MAIN SWITCHBOARD "MSB"	BUS DUCT
MSB-09	1	2"	4#3/0, 1#4 GND.	MAIN SWITCHBOARD "MSB"	BUS DUCT
DB-01	1	2 1/2"	4#4/0, 1#4 GND.	DIST. SWITCHBOARD "DB1"	PANEL "L"
DB-02	1	2 1/2"	4#4/0, 1#4 GND.	DIST. SWITCHBOARD "DB1"	PANEL "M"
DB-03	1	1 1/4"	4#2, 1#8 GND.	DIST. SWITCHBOARD "DB1"	PANEL "N"
G-01	1	1 1/4"	4#2, 1#8 GND.	EMERGENCY GENERATOR SWITCH	AUTOMATIC TRANSFER SWITCH
E-01	1	1 1/4"	4#2, 1#8 GND.	AUTOMATIC TRANSFER SWITCH	PANEL "EA"
E-02	1	1 1/4"	3#2, 1#8 GND.	PANEL "EA"	PANEL EMCC
E-03	1	3/4"	3#6, 1#10 GND.	PANEL "EA"	TRANS. T2
E-04	1	1"	4#4, 1#8 GND.	PANEL "EL"	PANEL "EM"
T1-01	2	2 1/2"	4-250MCM, 1#2 GND.	TRANS. T1	DIST. SWITCHBOARD "DB1"
T2-01	1	1 1/4"	4#2, 1#8 GND.	TRANS. T2	PANEL "EL"

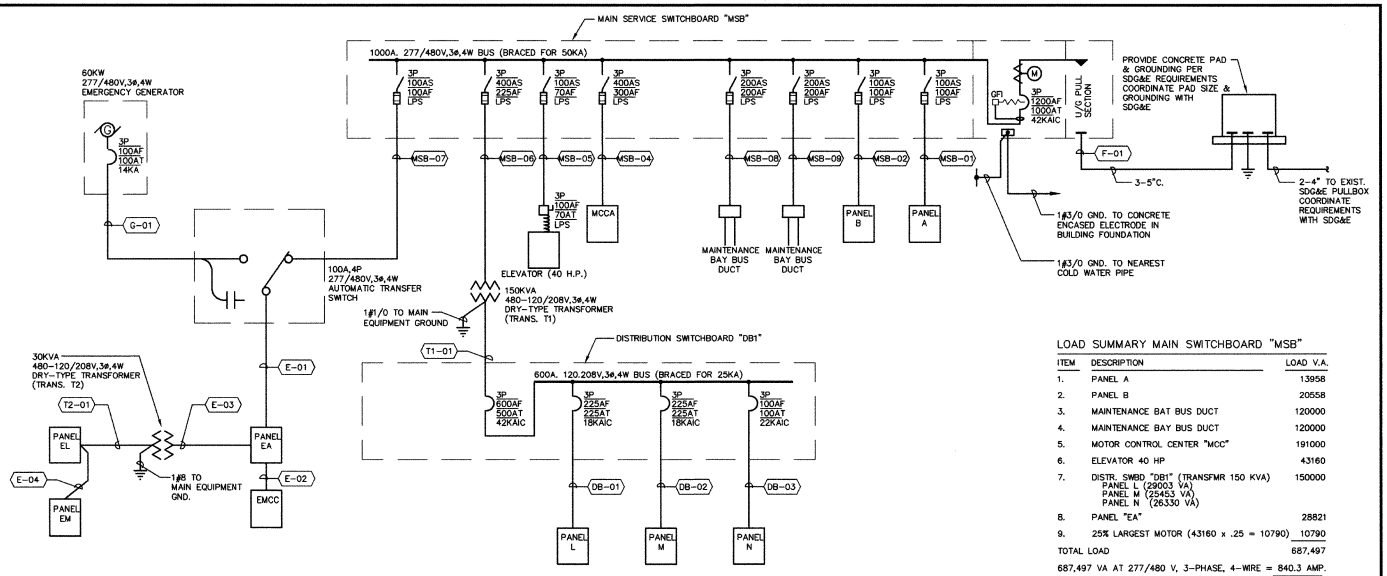

SINGLE LINE DIAGRAM — NONE — 1 E30.1

LOAD SUMMARY MAIN SWITCHBOARD "MSB"

ITEM	DESCRIPTION	LOAD V.A.
1.	PANEL A	13958
2.	PANEL B	20558
3.	MAINTENANCE BAT BUS DUCT	120000
4.	MAINTENANCE BAY BUS DUCT	120000
5.	MOTOR CONTROL CENTER "MCC"	191000
6.	ELEVATOR 40 HP	43160
7.	DISTR. SWBD "DB1" (TRANSFMR 150 KVA) PANEL L (29003 VA) PANEL M (25453 VA) PANEL N (26330 VA)	150000
8.	PANEL "EA"	28821
9.	25% LARGEST MOTOR (43160 x .25 = 10790)	10790
TOTAL LOAD		687,497

687,497 VA AT 277/480 V, 3-PHASE, 4-WIRE = 840.3 AMP.

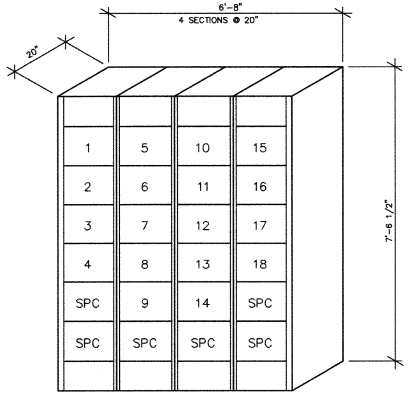

MCCA ELEVATION — NONE — 2 E30.1

AS-BUILT
Contract No. BUS-443B
Date NOV. 2000

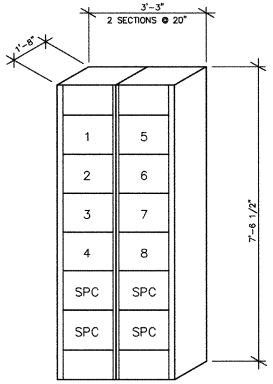

EMCC ELEVATION — NONE — 3 E30.1

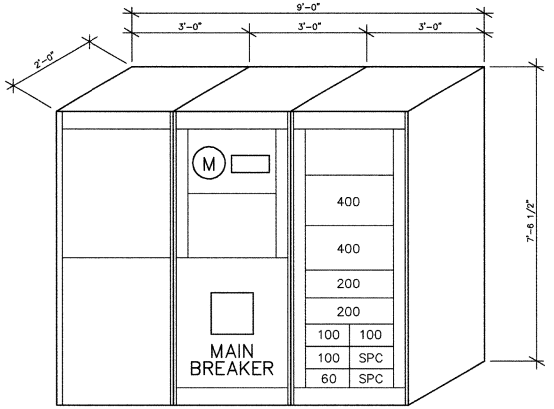

MSB ELEVATION — NONE — 4 E30.1

REGISTERED PROFESSIONAL ENGINEER — NOEL WAY KAU — No. 9304 — Exp. 6-30-01 — ELECTRICAL — STATE OF CALIFORNIA

CONSTRUCTION CHANGE TABLE

CHANGE	DATE	SHEET NUMBERS REVISED OR ADDED THIS CHANGE
1	4/17/00	SECOND FLOOR INTERIOR IMPROVEMENTS

STV Incorporated
ENGINEERS & PLANNERS
1000 WILSHIRE BLVD., SUITE 1455
LOS ANGELES, CA 90017

DESIGNED BY	DATE
DRAWN BY	
CHECKED BY	
MTDB PRJ. ENG.	

MTDB
Metropolitan Transit Development Board
1255 Imperial Avenue, Suite 1000, San Diego, Ca. 92101-7490 (619)231-1466

IMPERIAL AVENUE DIVISION
BUS MAINTENANCE FACILITY

SINGLE LINE DIAGRAM

SCALE: NONE
MTDB CONTRACT NO.: BUS-443B
DRAWING NO.: E30.1
SHEET NO.: 93

KANNAD PROJECT NUMBER: 9007

FEEDER SCHEDULE

NO.	CONDUIT QUANTITY	CONDUIT SIZE	CONDUCTORS (EACH CONDUIT)	FROM	TO
F-01	3	5"	BY POWER CO.	PAD MOUNT TRANS.	MAIN SWITCHBOARD "MSB"
MSB-01	1	1 1/4"	4#2, 1#8 GND.	MAIN SWITCHBOARD "MSB"	PANEL A
MSB-02	1	1 1/4"	4#2, 1#8 GND.	MAIN SWITCHBOARD "MSB"	PANEL B
MSB-04	1	2 1/2"	4#350MCM, 1#4	MAIN SWITCHBOARD "MSB"	MOTOR CONTROL CENTER MCCA
MSB-05	1	1"	3#4, 1#8 GND.	MAIN SWITCHBOARD "MSB"	ELEVATOR
MSB-06	1	2"	3#4/0, 1#4 GND.	MAIN SWITCHBOARD "MSB"	TRANS. T1
MSB-07	1	1 1/4"	4#2, 1#8 GND.	MAIN SWITCHBOARD "MSB"	AUTOMATIC TRANSFER SWITCH
MSB-08	1	2"	4#3/0, 1#4 GND.	MAIN SWITCHBOARD "MSB"	BUS DUCT
MSB-09	1	2"	4#3/0, 1#4 GND.	MAIN SWITCHBOARD "MSB"	BUS DUCT
DB-01	1	2 1/2"	4#4/0, 1#4 GND.	DIST. SWITCHBOARD "DB1"	PANEL L
DB-02	1	2 1/2"	4#4/0, 1#4 GND.	DIST. SWITCHBOARD "DB1"	PANEL M
DB-03	1	1 1/4"	4#2, 1#8 GND.	DIST. SWITCHBOARD "DB1"	PANEL N
G-01	1	1 1/4"	4#2, 1#8 GND.	EMERGENCY GENERATOR SWITCH	AUTOMATIC TRANSFER SWITCH
E-01	1	1 1/4"	4#2, 1#8 GND.	AUTOMATIC TRANSFER SWITCH	PANEL EA
E-02	1	1 1/4"	3#2, 1#8 GND.	PANEL EA	PANEL EMCC
E-03	1	3/4"	3#6, 1#10 GND.	PANEL EA	TRANS. T2
E-04	1	1"	4#4, 1#8 GND.	PANEL EL	PANEL EM
T1-01	2	2 1/2"	4-250MCM, 1#2 GND.	TRANS. T1	DIST. SWITCHBOARD "DB1"
T2-01	1	1 1/4"	4#2, 1#8 GND.	TRANS. T2	PANEL EL

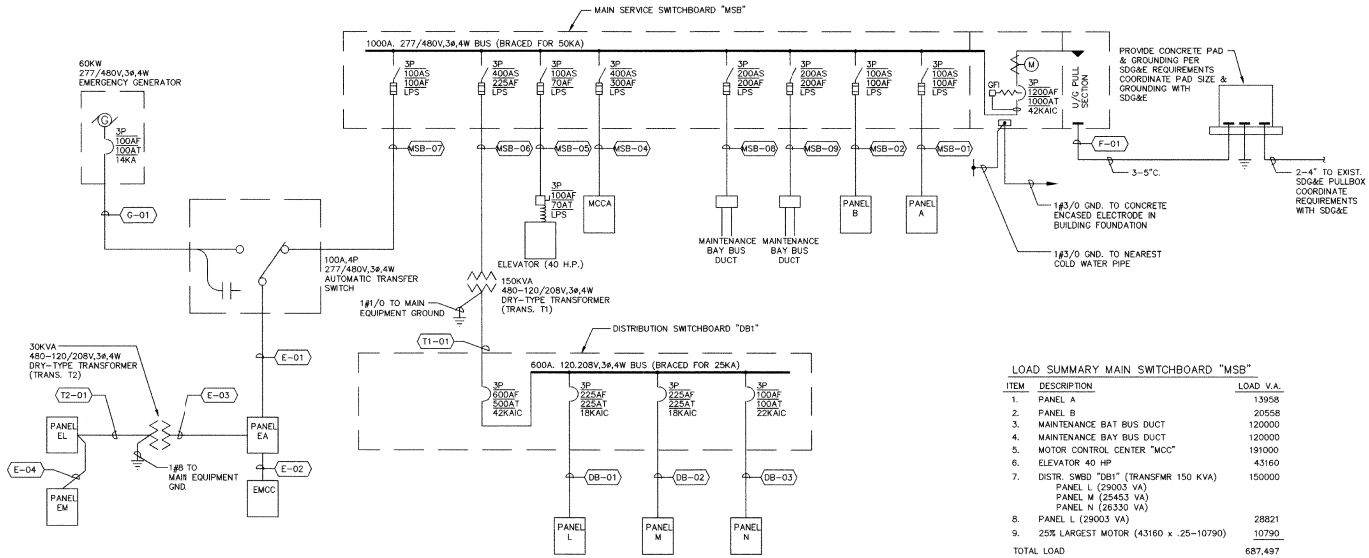

SINGLE LINE DIAGRAM — NONE — 1 — E30.1

LOAD SUMMARY MAIN SWITCHBOARD "MSB"

ITEM	DESCRIPTION	LOAD V.A.
1.	PANEL A	13958
2.	PANEL B	20558
3.	MAINTENANCE BAT BUS DUCT	120000
4.	MAINTENANCE BAY BUS DUCT	120000
5.	MOTOR CONTROL CENTER "MCC"	191000
6.	ELEVATOR 40 HP	43160
7.	DISTR. SWBD "DB1" (TRANSFMR 150 KVA) PANEL L (29003 VA) PANEL M (25453 VA) PANEL N (26330 VA)	150000
8.	PANEL L (29003 VA)	28821
9.	25% LARGEST MOTOR (43160 x .25-10790)	10790
TOTAL LOAD		687,497

687,497 VA AT 277/480 V, 3-PHASE, 4-WIRE = 640.3 AMP.

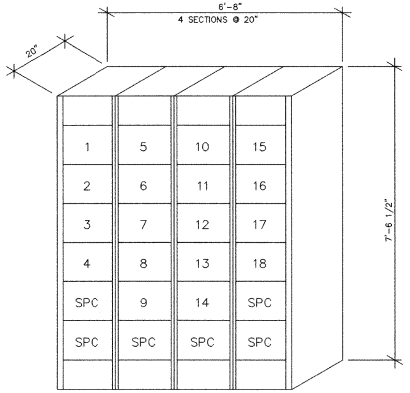

MCCA ELEVATION — NONE — 2 — E30.1

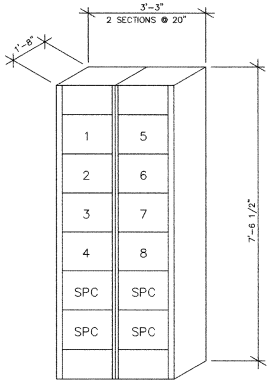

EMCC ELEVATION — NONE — 3 — E30.1

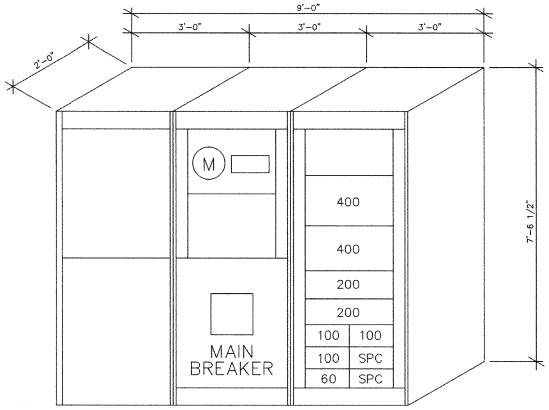

MSB ELEVATION — NONE — 4 — E30.1

AS-BUILT
A. deBrauwere
Contract No BUS-443B
Date NOV. 2000

REGISTERED PROFESSIONAL ENGINEER KIRK WAI KAN No. 9304 Exp. 3-30-01 ELECTRICAL STATE OF CALIFORNIA

CONSTRUCTION CHANGE TABLE

CHANGE	DATE	SHEET NUMBERS REVISED OR ADDED THIS CHANGE

STV Incorporated
ENGINEERS & PLANNERS
1055 WILSHIRE BLVD., SUITE 1455
LOS ANGELES, CA 90017

DESIGNED BY	S. CONNER	DATE 11/98
DRAWN BY	K. SPRADLING	11/98
CHECKED BY	M. NIEDERHAUS	11/98
MTDB PRJ. ENG.		

MTDB
Metropolitan Transit Development Board
1255 Imperial Avenue, Suite 1000, San Diego, Ca. 92101-7490 (619)231-1466

IMPERIAL AVENUE DIVISION
BUS MAINTENANCE FACILITY

SINGLE LINE DIAGRAM

SCALE	NONE
MTDB CONTRACT NO.	BUS-443B
DRAWING NO.	E30.1
SHEET NO.	93

PANEL A

MOUNTING SURFACE(IN NEMA 1 ENCLOSURE) — (NORMAL POWER) — LOCATION ELECTRIC ROOM

VOLTAGE 480/277 PHASE 3 WIRE 4 — 14,000 AIC SYM 100A BUS M.L.O. MAIN

LOCATION	WATTAGE øA	WATTAGE øB	WATTAGE øC	LTG	RECS	MISC	POLS	BKR	CIR	PH	CIR	BKR	POLS	MISC	RECS	LTG	WATTAGE øA	WATTAGE øB	WATTAGE øC	LOCATION
SPARE	–						1	20	1	A	2	20	1			40	2480			PARTS STORAGE LIGHTING
SPARE		–					1	20	3	B	4	20	1			31		1922		OFFICE & SHOP LIGHTING
SPARE			–				1	20	5	C	6	20	1			21			1271	FIRST FLOOR CORRIDOR LIGHTING
SPARE	–						1	20	7	A	8	20	1			14	868			OFFICE & SHOP LIGHTING
SPARE		–					1	20	9	B	10	20	1			25		1457		SECOND FLOOR LOCKER ROOMS LIGHTING
SPARE			–				1	20	11	C	12	20	1			7			372	SECOND FLOOR CORRIDOR LIGHTING
SPARE	–						1	20	13	A	14	20	1			26	1612			SECOND FLOOR OFFICE & SHOPS LIGHTING
SPARE		–					1	20	15	B	16	20	1			–		–		SPARE
SPARE			–				1	20	17	C	18	20	1			6			1770	EXTERIOR MAINTENANCE BAY LIGHTING 1
SPARE	–						1	20	19	A	20	20	1			6	1770			EXTERIOR MAINTENANCE BAY LIGHTING 1
SPARE		–					1	20	21	B	22	20	1			34		3100		SECOND FLOOR OFFICE LIGHTING
SPARE			–				1	20	23	C	24	20	1						–	SPARE
									25	A	26									
									27	B	28									
									29	C	30									
									31	A	32									
									33	B	34									
									35	C	36									
									37	A	38									
									39	B	40									
									41	C	42									
	–	–	–						WATTS/LINE								6730	6479	3413	

TOTAL øA: 6730 WATTS
TOTAL øB: 6479 WATTS
TOTAL øC: 3413 WATTS

TOTAL WATTS ——→ 16,622
PANEL AMPS ——→ 20
HIGH PHASE AMPS ——→ 24
HIGH PHASE LCL AMPS ——→ 30

1. PROVIDE TIME SWITCH WITH ASTRONOMIC DIAL.

PANEL B

MOUNTING SURFACE(IN NEMA 1 ENCLOSURE) — (NORMAL POWER) — LOCATION ELECTRIC ROOM

VOLTAGE 480/277 PHASE 3 WIRE 4 — 14,000 AIC SYM 100A BUS 100A/3P MAIN 1

LOCATION	WATTAGE øA	WATTAGE øB	WATTAGE øC	LTG	RECS	MISC	POLS	BKR	CIR	PH	CIR	BKR	POLS	MISC	RECS	LTG	WATTAGE øA	WATTAGE øB	WATTAGE øC	LOCATION
PIT LIGHTING	1180			4			1	20	1	A	2	20	1				–			SPARE
MAINTENANCE BAY LIGHTING		2065		7			1	20	3	B	4	20	1					–		SPARE
MAINTENANCE BAY LIGHTING			2360	8			1	20	5	C	6	20	1						–	SPARE
MAINTENANCE BAY LIGHTING	2950			10			1	20	7	A	8	20	1				–			SPARE
MAINTENANCE BAY LIGHTING		2065		7			1	20	9	B	10	20	1					–		SPARE
MAINTENANCE BAY LIGHTING			2950	10			1	20	11	C	12	20	1						–	SPARE
MAINTENANCE BAY LIGHTING	2360			8			1	20	13	A	14	20	1				–			SPARE
MAINTENANCE BAY LIGHTING		2065		7			1	20	15	B	16	20	1					–		SPARE
BODY SHOP LIGHTING			2561	15			1	20	17	C	18	20	1						–	SPARE
SPARE	–						1	20	19	A	20	20	1				–			SPARE
SPARE		–					1	20	21	B	22	20	1					–		SPARE
SPARE			–				1	20	23	C	24	20	1						–	SPARE
									25	A	26									
									27	B	28									
									29	C	30									
									31	A	32									
									33	B	34									
									35	C	36									
									37	A	38									
									39	B	40									
									41	C	42									
	6490	6195	7871						WATTS/LINE								–	–	–	

TOTAL øA: 6490 WATTS
TOTAL øB: 6195 WATTS
TOTAL øC: 7871 WATTS

TOTAL WATTS ——→ 20,556
PANEL AMPS ——→ 25
HIGH PHASE AMPS ——→ 28
HIGH PHASE LCL AMPS ——→ 36
DEMAND LOAD AMPS ——→ 31

1. PROVIDE MAIN BREAKER WITH SHUNT-TRIP CONNECTED TO GAS DETECTION SYSTEM.

PANEL EL

MOUNTING SURFACE(IN NEMA 1 ENCLOSURE) — (EMERGENCY POWER) — LOCATION ELECTRIC ROOM

VOLTAGE 208/120 PHASE 3 WIRE 4 — 10,000 AIC SYM 100A BUS 100A/3P MAIN

LOCATION	WATTAGE øA	WATTAGE øB	WATTAGE øC	LTG	RECS	MISC	POLS	BKR	CIR	PH	CIR	BKR	POLS	MISC	RECS	LTG	WATTAGE øA	WATTAGE øB	WATTAGE øC	LOCATION
SUBFEED PANEL EM	3700							70	1	A	2	20	1	1			250			FACP
SUBFEED PANEL EM		3540						3	B	4	20	1	1					250		INT
SUBFEED PANEL EM			3660				3		5	C	6	20	1	1					1000	GAS DETECTION CONTROL PANEL
TELEPHONE INFO.	720				1	1	20	7	A	8	20	1	9				450			1ST FLR. FIRE SMOKE DAMPERS
TELEPHONE INFO.		720			1	1	20	9	B	10	20	1	8					450		2ND FLR. FIRE SMOKE DAMPERS
TELEPHONE INFO.			720		1	1	20	11	C	12	20	1							500	ELEVATOR CABINET
TELEPHONE INFO.	720				1	1	20	13	A	14	20	1					–			SPARE
TELEPHONE INFO.		720			1	1	20	15	B	16	20	1						–		SPARE
TELEPHONE INFO.			720		1	1	20	17	C	18	20	1							–	SPARE
TELEPHONE INFO.	720				1	1	20	19	A	20	20	1					–			SPARE
TELEPHONE INFO.		720			1	1	20	21	B	22	20	1						–		SPARE
SPARE			–				1	20	23	C	24	20	1						–	SPARE
									25	A	26									
									27	B	28									
									29	C	30									
									31	A	32									
									33	B	34									
									35	C	36									
									37	A	38									
									39	B	40									
									41	C	42									
	5860	5700	5100						WATTS/LINE								700	700	1500	

TOTAL øA: 6560 WATTS
TOTAL øB: 6400 WATTS
TOTAL øC: 6600 WATTS

TOTAL WATTS ——→ 19,560
PANEL AMPS ——→ 54
HIGH PHASE AMPS ——→ 55
HIGH PHASE LCL AMPS ——→ 58

PANEL EM

MOUNTING SURFACE(IN NEMA 1 ENCLOSURE) — (EMERGENCY POWER) — LOCATION ELECTRIC ROOM

VOLTAGE 208/120 PHASE 3 WIRE 4 — 10,000 AIC SYM 100A BUS 70A/3P MAIN

LOCATION	WATTAGE øA	WATTAGE øB	WATTAGE øC	LTG	RECS	MISC	POLS	BKR	CIR	PH	CIR	BKR	POLS	MISC	RECS	LTG	WATTAGE øA	WATTAGE øB	WATTAGE øC	LOCATION
REC., COLUMNS IN MAINT.	1500				2		1	20	1	A	2	20	1			3	540			SPARE
REC., COLUMNS IN MAINT.		1500			2		1	20	3	B	4	20	1			3		540		SPARE
AUTO ROLL UP DOOR, #3 & #9			1660			2	1	20	5	C	6	20	1	2					500	SPARE
AUTO ROLL UP DOOR, #4 & #10	1660					2	1	20	7	A	8	20	1				–			FLEETWATCH FLUID SYSTEM
AUTO ROLL UP DOOR, BODY SHOP		1500				2	1	20	9	B	10	20	1					–		FLEETWATCH FLUID SYSTEM
LIGHTS, PAINT SHOP			1500		2		1	20	11	C	12	20	1						–	BATTERY CHARGER FOR GDCP
SPARE	–						1	20	13	A	14	20	1				–			SPARE
SPARE		–					1	20	15	B	16	20	1					–		SPARE
SPARE			–				1	20	17	C	18	20	1						–	SPARE
SPARE	–						1	20	19	A	20	20	1				–			SPARE
SPARE		–					1	20	21	B	22	20	1					–		SPARE
SPARE			–				1	20	23	C	24	20	1						–	SPARE
									25	A	26									
									27	B	28									
									29	C	30									
									31	A	32									
									33	B	34									
									35	C	36									
									37	A	38									
									39	B	40									
									41	C	42									
	3160	3000	3160						WATTS/LINE								540	540	500	

TOTAL øA: 3700 WATTS
TOTAL øB: 3540 WATTS
TOTAL øC: 3660 WATTS

TOTAL WATTS ——→ 10,900
PANEL AMPS ——→ 30
HIGH PHASE AMPS ——→ 31
HIGH PHASE LCL AMPS ——→ 31
DEMAND LOAD AMPS ——→ 30

1. PROVIDE MAIN BREAKER WITH SHUNT-TRIP CONNECTED TO GAS DETECTION SYSTEM.

PANEL L

MOUNTING SURFACE(IN NEMA 1 ENCLOSURE) — (NORMAL POWER) — LOCATION ELECTRIC ROOM

VOLTAGE 208/120 PHASE 3 WIRE 4 — 10,000 AIC SYM 225A BUS M.L.O. MAIN

LOCATION	WATTAGE øA	WATTAGE øB	WATTAGE øC	LTG	RECS	MISC	POLS	BKR	CIR	PH	CIR	BKR	POLS	MISC	RECS	LTG	WATTAGE øA	WATTAGE øB	WATTAGE øC	LOCATION
MAINTENANCE MANAGER OFFICE	720			4			1	20	1	A	2	20	1			4	720			LUNCH ROOM
MAINTENANCE MANAGER OFFICE		540		3			1	20	3	B	4	20	1			4		720		LUNCH ROOM
MAINTENANCE MANAGER OFFICE			540	3			1	20	5	C	6	20	1			1			1000	VENDING MACHINE
LOCKER ROOMS	900			5			1	20	7	A	8	20	1			1	1000			VENDING MACHINE
LOCKER ROOMS		720		4			1	20	9	B	10	20	1			1		1000		VENDING MACHINE
OFFICE & RESTROOMS			900	5			1	20	11	C	12	20	1			1			1000	VENDING MACHINE
OFFICE & RESTROOMS	900			5			1	20	13	A	14	20	1			1	1000			REFRIGERATOR
OFFICE & RESTROOMS		900		5			1	20	15	B	16	20	1			1		1500		SMALL APPLIANCE
OFFICE & SHOPS			1080	6			1	20	17	C	18	20	1			1			1500	SMALL APPLIANCE
OFFICE & SHOPS	1080			6			1	20	19	A	20	20	1			2	1000			REC., TELECOM ROOM
PARTS STORAGE		1080		6			1	20	21	B	22	20	1			3		540		REC., ELEVATOR EQUIP. ROOM
PARTS STORAGE			1080	6			1	20	23	C	24	20	1						1000	SPACE ONLY
BODY SHOP	540			3			1	20	25	A	26	20	1				1334			EXHAUST FAN EF-7 & EF-8
SPACE FOR SHUNT-TRIP		–					–	–	27	B	28	20	1					500		HVAC CONTROLLER & FAN RELAY PNI
BODY SHOP			540	3			1	20	29	C	30	20	1						506	RECIRCULATION PUMP CP-1
SPACE FOR SHUNT-TRIP	–						–	–	31	A	32	20	1				828			ELECTRIC WATER COOLER EWC-1
BODY SHOP		720				4	1	20	33	B	34	20	1					828		ELECTRIC WATER COOLER EWC-2
SPACE FOR SHUNT-TRIP			–				–	–	35	C	36	20	1		3				150	ELEVATOR LOBBY LIGHTS
EXHAUST FAN EF-7	667					1	–	–	37	A	38	–	–			–				REC., FOR CCTV RACK
SPACE FOR SHUNT-TRIP		–					–	–	39	B	40	–	–				–			WATER HEATER FAN & CONTROLS
REC. ON AUTO BODY ROOF			–				–	–	41	C	42	–	–					–		SPACE ONLY
	4807	3960	4140						WATTS/LINE								5882	5088	5156	

TOTAL øA: 10689 WATTS
TOTAL øB: 9048 WATTS
TOTAL øC: 9296 WATTS

TOTAL WATTS ——→ 29,033
PANEL AMPS ——→ 81
HIGH PHASE AMPS ——→ 89
HIGH PHASE LCL AMPS ——→ 89
DEMAND LOAD AMPS ——→ 73

1. PROVIDE SHUNT-TRIP CONNECTED TO GAS DETECTION SYSTEM.

PANEL M

MOUNTING SURFACE(IN NEMA 1 ENCLOSURE) — (NORMAL POWER) — LOCATION POWER UNIT ROOM

VOLTAGE 208/120 PHASE 3 WIRE 4 — 10,000 AIC SYM 225A BUS 200A/3P MAIN 1

LOCATION	WATTAGE øA	WATTAGE øB	WATTAGE øC	LTG	RECS	MISC	POLS	BKR	CIR	PH	CIR	BKR	POLS	MISC	RECS	LTG	WATTAGE øA	WATTAGE øB	WATTAGE øC	LOCATION
EXHAUST FAN EF-2	1334				2	1	20	1	A	2	20	1					–			SPARE
EXHAUST FAN EF-2		1334			2	1	20	3	B	4	20	1						–		RECEPTACLES, INSPECTION PIT
RECEPTACLES, N.E. MAINT. SHOP			540	3		1	20	5	C	6	20	1	3						540	RECEPTACLES, S.E. MAINT. SHOP
RECEPTACLES, N.E. MAINT. SHOP	540			3		1	20	7	A	8	20	1	3				540			RECEPTACLES, S.E. MAINT. SHOP
EXHAUST FAN EF-2		1334				1	20	9	B	10	20	1	3					540		RECEPTACLES, S.W. MAINT. SHOP
EXHAUST FAN EF-2			1334		2	1	20	11	C	12	20	1	3						540	RECEPTACLES, S.W. MAINT. SHOP
RECEPTACLES, N.W. MAINT. SHOP	540			3		1	20	13	A	14	20	1	1				830			AUTO ROLL UP DOOR #11
RECEPTACLES, N.W. MAINT. SHOP		540		3		1	20	15	B	16	20	1	1					830		AUTO ROLL UP DOOR #13
EXHAUST FAN EF-4			667		1	1	20	17	C	18	20	1	2						1660	AUTO ROLL UP DOOR #1 & #5
MAINT./REPAIR 208V. REC.	1000					2	20	19	A	20	20	1	1				830			AUTO ROLL UP DOOR #7
MAINT./REPAIR 208V. REC.		1000				2	21	B	22	20	1	1						830		AUTO ROLL UP DOOR #12
MAINT./REPAIR 208V. REC.			1000			2	20	23	C	24	20	1	1						830	AUTO ROLL UP DOOR #14
MAINT./REPAIR 208V. REC.	1000					2	25	A	26	20	1	2					1660			AUTO ROOL UP DOOR #2 & #6
MAINT./REPAIR 208V. REC.		1000				2	27	B	28	20	1	1						830		AUTO ROLL UP DOOR #8
MAINT./REPAIR 208V. REC.			1000			2	29	C	30	20	1								830	AUTO ROLL UP DOOR, LOADING AREA
MAINT./REPAIR 50A 208V REC.	–					1	20	31	A	32	20	1					–			MAINT./REPAIR 50A 208V REC.
MAINT./REPAIR 50A 208V REC.		–				1	20	33	B	34	20	1						–		MAINT./REPAIR 50A 208V REC.
PARTS STORAGE 208V REC.			–			1	20	35	C	36	20	1							–	ROOF REC.
PARTS STORAGE 208V REC.	–					–	–	37	A	38	–	–					–			SPACE ONLY
SPACE ONLY		–				–	–	39	B	40	–	–						–		SPACE ONLY
SPACE ONLY			–			–	–	41	C	42	–	–							–	SPACE ONLY
	4414	5208	4541						WATTS/LINE								3860	3030	4440	

TOTAL øA: 8274 WATTS
TOTAL øB: 8238 WATTS
TOTAL øC: 8941 WATTS

TOTAL WATTS ——→ 25,453
PANEL AMPS ——→ 71
HIGH PHASE AMPS ——→ 75
HIGH PHASE LCL AMPS ——→ 75
DEMAND LOAD AMPS ——→ 71

1. PROVIDE MAIN BREAKER WITH SHUNT-TRIP CONNECTED TO GAS DETECTION SYSTEM.

AS-BUILT
A. Osborn
Contract No. BUS-443B
Date NOV. 2000

REGISTERED PROFESSIONAL ENGINEER — MICHAEL WAYNE KAHRAU — No. 19304 — Exp. 3-31-01 — ELECTRICAL — STATE OF CALIFORNIA

KAHRAU PROJECT NUMBER 19007

CONSTRUCTION CHANGE TABLE

CHANGE	DATE	SHEET NUMBERS REVISED OR ADDED THIS CHANGE
1	4/17/00	SECOND FLOOR INTERIOR IMPROVEMENTS

STV Incorporated
ENGINEERS & PLANNERS
1055 WILSHIRE BLVD., SUITE 1455
LOS ANGELES, CA. 90017

DESIGNED BY	DATE
M. NIEDERHAUS	6/00
DRAWN BY	
K. SPRADLING	6/00
CHECKED BY	
M. NIEDERHAUS	6/00
MTDB PRJ. ENG.	

MTDB
Metropolitan Transit Development Board
1255 Imperial Avenue, Suite 1000, San Diego, Ca. 92101-7490 (619)231-1466

IMPERIAL AVENUE DIVISION BUS MAINTENANCE FACILITY

ELECTRICAL PANEL SCHEDULES

SCALE	
NONE	
MTDB CONTRACT NO.	
BUS-443B	
DRAWING NO.	SHEET NO.
E30.2	94

MOUNTING SURFACE(IN NEMA 1 ENCLOSURE) — **PANEL A** (NORMAL POWER) — LOCATION ELECTRIC ROOM

VOLTAGE 480/277 PHASE 3 WIRE 4 — 14,000 AIC SYM 100A BUS M.L.O. MAIN

LOCATION	WATTAGE øA	WATTAGE øB	WATTAGE øC	LTG	RECS	MISC	POLS	BKR	CIR	PH	CIR	BKR	POLS	MISC	RECS	LTG	WATTAGE øA	WATTAGE øB	WATTAGE øC	LOCATION
SPARE	–					1	20	1	A	2	20	1				40	2480			PARTS STORAGE LIGHTING
SPARE		–				1	20	3	B	4	20	1				31		1922		OFFICE & SHOP LIGHTING
SPARE			–			1	20	5	C	6	20	1				21			1271	FIRST FLOOR CORRIDOR LIGHTING
SPARE	–					1	20	7	A	8	20	1				14	868			OFFICE & SHOP LIGHTING
SPARE		–				1	20	9	B	10	20	1				25			1457	SECOND FLOOR LOCKER ROOMS LIGHTING
SPARE			–			1	20	11	C	12	20	1				7			372	SECOND FLOOR CORRIDOR LIGHTING
SPARE	–					1	20	13	A	14	20	1				26	1612			SECOND FLOOR OFFICE & SHOPS LIGHTING
SPARE		–				1	20	15	B	16	20	1				40		1271		SPARE
SPARE			–			1	20	17	C	18	20	1				6			1770	EXTERIOR MAINTENANCE BAY LIGHTING 1
SPARE	–					1	20	19	A	20	20	1				6	1770			EXTERIOR MAINTENANCE BAY LIGHTING 1
SPARE		–				1	20	21	B	22	20	1						–		SECOND FLOOR OFFICE LIGHTING
SPARE			–			1	20	23	C	24	20	1							–	SPARE
										25	A	26								
										27	B	28								
										29	C	30								
										31	A	32								
										33	B	34								
										35	C	36								
										37	A	38								
										39	B	40								
										41	C	42								
	–	–	–	WATTS/LINE													6730	4650	2578	

TOTAL øA: 6730 WATTS
TOTAL øB: 4650 WATTS
TOTAL øC: 2578 WATTS

TOTAL WATTS → 13,958
PANEL AMPS → 17
HIGH PHASE AMPS → 24
HIGH PHASE LCL AMPS → 30
DEMAND LOAD AMPS → 21

1. PROVIDE TIME SWITCH WITH ASTRONOMIC DIAL.

MOUNTING SURFACE(IN NEMA 1 ENCLOSURE) — **PANEL B** (NORMAL POWER) — LOCATION ELECTRIC ROOM

VOLTAGE 480/277 PHASE 3 WIRE 4 — 14,000 AIC SYM 100A BUS 100A/3P MAIN 1

LOCATION	WATTAGE øA	WATTAGE øB	WATTAGE øC	LTG	RECS	MISC	POLS	BKR	CIR	PH	CIR	BKR	POLS	MISC	RECS	LTG	WATTAGE øA	WATTAGE øB	WATTAGE øC	LOCATION
PIT LIGHTING	1180			4			1	20	1	A	2	20	1				–			SPARE
MAINTENANCE BAY LIGHTING		2065		7			1	20	3	B	4	20	1					–		SPARE
MAINTENANCE BAY LIGHTING			2360	8			1	20	5	C	6	20	1						–	SPARE
MAINTENANCE BAY LIGHTING	2950			10			1	20	7	A	8	20	1				–			SPARE
MAINTENANCE BAY LIGHTING		2065		7			1	20	9	B	10	20	1					–		SPARE
MAINTENANCE BAY LIGHTING			2950	10			1	20	11	C	12	20	1						–	SPARE
MAINTENANCE BAY LIGHTING	2360			8			1	20	13	A	14	20	1				–			SPARE
MAINTENANCE BAY LIGHTING		2065		7			1	20	15	B	16	20	1					–		SPARE
BODY SHOP LIGHTING			2561	15			1	20	17	C	18	20	1						–	SPARE
SPARE	–						1	20	19	A	20	20	1				–			BRAKE SHOP EQUIPMENT
SPARE		–					1	20	21	B	22	20	1					–		BRAKE SHOP EQUIPMENT
SPARE			–				1	20	23	C	24	20	1						–	BRAKE SHOP EQUIPMENT
										25	A	26								
										27	B	28								
										29	C	30								
										31	A	32								
										33	B	34								
										35	C	36								
										37	A	38								
										39	B	40								
										41	C	42								
	6490	6195	7871	WATTS/LINE													–	–	–	

TOTAL øA: 6490 WATTS
TOTAL øB: 6195 WATTS
TOTAL øC: 7871 WATTS

TOTAL WATTS → 20,556
PANEL AMPS → 25
HIGH PHASE AMPS → 28
HIGH PHASE LCL AMPS → 36
DEMAND LOAD AMPS → 31

1. PROVIDE MAIN BREAKER WITH SHUNT-TRIP CONNECTED TO GAS DETECTION SYSTEM.

MOUNTING SURFACE(IN NEMA 1 ENCLOSURE) — **PANEL EL** (EMERGENCY POWER) — LOCATION ELECTRIC ROOM

VOLTAGE 208/120 PHASE 3 WIRE 4 — 10,000 AIC SYM 100A BUS 50A/3P MAIN

LOCATION	WATTAGE øA	WATTAGE øB	WATTAGE øC	LTG	RECS	MISC	POLS	BKR	CIR	PH	CIR	BKR	POLS	MISC	RECS	LTG	WATTAGE øA	WATTAGE øB	WATTAGE øC	LOCATION
SUBFEED PANEL EM	3700							70	1	A	2	20	1	1		250				SHUNT TRIP CIRCUIT FOR GDCP
SUBFEED PANEL EM		3540						3	B	4	20	1	1			250				SHUNT TRIP CIRCUIT FOR GDCP
SUBFEED PANEL EM			3160				3		5	C	6	20	1	1					1000	GAS DETECTION CONTROL PANEL
TELEPHONE INFO.	–					1	20	7	A	8	20	1	9		450					1ST FLOOR FIRE SMOKE DAMPER
TELEPHONE INFO.		–				1	20	9	B	10	20	1	8			450				2ND FLOOR FIRE SMOKE DAMPER
TELEPHONE INFO.			–			1	20	11	C	12	20	1							–	DUCT SMOKE DETECTOR
TELEPHONE INFO.	–					1	20	13	A	14	20	1			–					ELEVATOR CONTROL PANEL
TELEPHONE INFO.		–				1	20	15	B	16	20	1				–				SHUNT TRIP CIRCUIT FOR ELEVATOR
TELEPHONE INFO.			–			1	20	17	C	18	20	1							–	TELEPHONE EQUIPMENT RACK
TELEPHONE INFO.	–					1	20	19	A	20	20	1			–					FIRE ALARM PANEL
TELEPHONE INFO.		–				1	20	21	B	22	20	1				–				VIDEO EQUIPMENT RACK
SOUND MASKING SYSTEM			–			1	20	23	C	24	20	1							–	GENERATOR 120 VOLT POWER CKT.
MAIN CIRCUIT BREAKER									25	A	26									SPARE
MAIN CIRCUIT BREAKER									27	B	28									SPARE
MAIN CIRCUIT BREAKER									29	C	30									SPARE
									31	A	32									
									33	B	34									
									35	C	36									
									37	A	38									
									39	B	40									
									41	C	42									
	3700	3540	4160	WATTS/LINE													700	700	1000	

TOTAL øA: 4400 WATTS
TOTAL øB: 4240 WATTS
TOTAL øC: 4160 WATTS

TOTAL WATTS → 12,800
PANEL AMPS → 36
HIGH PHASE AMPS → 37
HIGH PHASE LCL AMPS → 37
DEMAND LOAD AMPS → 36

MOUNTING SURFACE(IN NEMA 1 ENCLOSURE) — **PANEL EM** (EMERGENCY POWER) — LOCATION ELECTRIC ROOM

VOLTAGE 208/120 PHASE 3 WIRE 4 — 10,000 AIC SYM 100A BUS 70A/3P MAIN 1

LOCATION	WATTAGE øA	WATTAGE øB	WATTAGE øC	LTG	RECS	MISC	POLS	BKR	CIR	PH	CIR	BKR	POLS	MISC	RECS	LTG	WATTAGE øA	WATTAGE øB	WATTAGE øC	LOCATION
RECEPTACLES, COLUMNS IN MAINT.	1500				2		1	20	1	A	2	20	1			3	540			SPARE
RECEPTACLES, COLUMNS IN MAINT.		1500			2		1	20	3	B	4	20	1			3		540		SPARE
AUTO ROLLUP DOOR, #3 & #9			1660			2	1	20	5	C	6	20	1	2					500	SPARE
AUTO ROLLUP DOOR, #4 & #10	1660				2		1	20	7	A	8	20	1				–			FLEETWATCH FLUID SYSTEM
AUTO ROLLUP, BODY SHOP		1500			2		1	20	9	B	10	20	1					–		FLEETWATCH FLUID SYSTEM
LIGHTS, PAINT BOOTH			1500		2		1	20	11	C	12	20	1						–	BATTERY CHARGER FOR GDCP
SPARE	–						1	20	13	A	14	20	1				–			SPARE
SPARE		–					1	20	15	B	16	20	1					–		SPARE
SPARE			–				1	20	17	C	18	20	1						–	SPARE
SPARE	–						1	20	19	A	20	20	1				–			SPARE
SPARE		–					1	20	21	B	22	20	1					–		SPARE
SPARE			–				1	20	23	C	24	20	1						–	SPARE
									25	A	26									
									27	B	28									
									29	C	30									
									31	A	32									
									33	B	34									
									35	C	36									
									37	A	38									
									39	B	40									
									41	C	42									
	3160	3000	3160	WATTS/LINE													540	540	500	

TOTAL øA: 3700 WATTS
TOTAL øB: 3540 WATTS
TOTAL øC: 3660 WATTS

TOTAL WATTS → 10,900
PANEL AMPS → 30
HIGH PHASE AMPS → 31
HIGH PHASE LCL AMPS → 31
DEMAND LOAD AMPS → 30

1. PROVIDE MAIN BREAKER WITH SHUNT-TRIP CONNECTED TO GAS DETECTION SYSTEM.

MOUNTING SURFACE(IN NEMA 1 ENCLOSURE) — **PANEL L** (NORMAL POWER) — LOCATION ELECTRIC ROOM

VOLTAGE 208/120 PHASE 3 WIRE 4 — 10,000 AIC SYM 225A BUS M.L.O. MAIN

LOCATION	WATTAGE øA	WATTAGE øB	WATTAGE øC	LTG	RECS	MISC	POLS	BKR	CIR	PH	CIR	BKR	POLS	MISC	RECS	LTG	WATTAGE øA	WATTAGE øB	WATTAGE øC	LOCATION
MAINTENANCE MANAGER OFFICE	720			4		1	20	1	A	2	20	1			4		720			LUNCH ROOM
MAINTENANCE MANAGER OFFICE		540		3		1	20	3	B	4	20	1			4			720		LUNCH ROOM
MAINTENANCE MANAGER OFFICE			540	3		1	20	5	C	6	20	1							1000	VENDING MACHINE
LOCKER ROOMS	900			5		1	20	7	A	8	20	1		1	1000					VENDING MACHINE
LOCKER ROOMS		720		4		1	20	9	B	10	20	1		1		1000				VENDING MACHINE
OFFICE & RESTROOMS			900	5		1	20	11	C	12	20	1		1					1000	VENDING MACHINE
OFFICE & RESTROOMS	900			5		1	20	13	A	14	20	1		1	1000					REFRIGERATOR
OFFICE & RESTROOMS		900		5		1	20	15	B	16	20	1		1		1500				SMALL APPLIANCE
OFFICE & SHOPS			1080	6		1	20	17	C	18	20	1		1					1500	SMALL APPLIANCE
OFFICE & SHOPS	1080			6		1	20	19	A	20	20	1	2		1000					RECEPTACLES,TELECOM ROOM
PARTS STORAGE		1080		6		1	20	21	B	22	20	1	3			540				RECEPTACLES,ELEVATOR EQUIP. RM.
PARTS STORAGE			1080	6		1	20	23	C	24	20	1							1000	SPARE
BODY SHOP	540			3		1	20	25	A	26	20	1			1334					EXHAUST FAN EF-7 & EF-8
SPACE FOR SHUNT-TRIP		–				–	–	27	B	28	20	1				500				HVAC CONTROLLER & FAN RELAY PNI
BODY SHOP			540	3		1	20	29	C	30	20	1							506	RECIRCULATION PUMP CP-1
SPACE FOR SHUNT-TRIP	–					–	–	31	A	32	20	1			828					ELECTRIC WATER COOLER EWC-1
BODY SHOP		720			4	1	20	33	B	34	20	1				828				ELECTRIC WATER COOLER EWC-2
SPACE FOR SHUNT-TRIP			–			–	–	35	C	36	20	1	3						150	ELEVATOR LOBBY LIGHTS
EXHAUST FAN EF-7	667				1	–	–	37	A	38	–	–			–					RECECALES FOR CCTV RACK
SPACE FOR SHUNT-TRIP		–				–	–	39	B	40	–	–				–				WATER HEATER FAN & CONTROLS
RECEPTACLE ON AUTO BODY ROOF			–			–	–	41	C	42	–	–								SPACE ONLY
	4807	3960	4140	WATTS/LINE													5882	5088	5156	

TOTAL øA: 10689 WATTS
TOTAL øB: 9048 WATTS
TOTAL øC: 9296 WATTS

TOTAL WATTS → 29,033
PANEL AMPS → 81
HIGH PHASE AMPS → 89
HIGH PHASE LCL AMPS → 89
DEMAND LOAD AMPS → 73

1. PROVIDE SHUNT-TRIP CONNECTED TO GAS DETECTION SYSTEM.

MOUNTING SURFACE(IN NEMA 1 ENCLOSURE) — **PANEL M** (NORMAL POWER) — LOCATION POWER UNIT ROOM

VOLTAGE 208/120 PHASE 3 WIRE 4 — 10,000 AIC SYM 225A BUS 200A/3P MAIN 1

LOCATION	WATTAGE øA	WATTAGE øB	WATTAGE øC	LTG	RECS	MISC	POLS	BKR	CIR	PH	CIR	BKR	POLS	MISC	RECS	LTG	WATTAGE øA	WATTAGE øB	WATTAGE øC	LOCATION
EXHAUST FAN EF-2	1334				2	1	20	1	A	2	20	1					–			SPARE
EXHAUST FAN EF-2		1334			2	1	20	3	B	4	20	1						–		RECEPTACLES, INSPECTION PIT
RECEPTACLES, N.E. MAINT. SHOP			540		3		1	20	5	C	6	20	1	1	3				540	RECEPTACLES, S.E. MAINT. SHOP
RECEPTACLES, N.E. MAINT. SHOP	540				3		1	20	7	A	8	20	1	1	3		540			RECEPTACLES, S.E. MAINT. SHOP
EXHAUST FAN EF-2		1334					1	20	9	B	10	20	1	1	3			540		RECEPTACLES, S.W. MAINT. SHOP
EXHAUST FAN EF-2			1334		2	1	20	11	C	12	20	1	1	1	3				540	RECEPTACLES, S.W. MAINT. SHOP
RECEPTACLES, N.W. MAINT. SHOP	540				3		1	20	13	A	14	20	1	1			830			AUTO ROLLUP DOOR #11
RECEPTACLES, N.W. MAINT. SHOP		540			3		1	20	15	B	16	20	1	1				830		AUTO ROLLUP DOOR #13
EXHAUST FAN EF-4			667			1	1	20	17	C	18	20	1	2					1660	AUTO ROLLUP DOOR #1 & #5
MAINT./REPAIR 208V. REC.	1000						20	19	A	20	20	1	1				830			AUTO ROLLUP DOOR #7
MAINT./REPAIR 208V. REC.		1000				2	21	B	22	20	1	1						830		AUTO ROLLUP DOOR #12
MAINT./REPAIR 208V. REC.			1000				20	23	C	24	20	1	1						830	AUTO ROLLUP DOOR #14
MAINT./REPAIR 208V. REC.	1000					2		25	A	26	20	1	2				1660			AUTO ROLLUP DOOR #2 & #6
MAINT./REPAIR 208V. REC.		1000					20	27	B	28	20	1	1					830		AUTO ROLLUP DOOR #8
MAINT./REPAIR 208V. REC.			1000			2		29	C	30	20	1							830	AUTO ROLLUP DOOR, LOADING AREA
MAINT./REPAIR 50A 208V. RECEPT.	–						1	20	31	A	32	20	1				–			MAINT./REPAIR 50A 208V RECEPT.
" " " " "		–					1	20	33	B	34	20	1					–		" " " " "
PARTS STORAGE 208V RECEPTACLES			–				1	20	35	C	36	20	1						–	ROOF RECEPTACLES
" " " "	–						–	–	37	A	38	–	–				–			SPACE ONLY
SPACE ONLY		–					–	–	39	B	40	–	–					–		SPACE ONLY
SPACE ONLY			–				–	–	41	C	42	–	–						–	SPACE ONLY
	4414	5208	4541	WATTS/LINE													3860	3030	4440	

TOTAL øA: 8274 WATTS
TOTAL øB: 8238 WATTS
TOTAL øC: 8941 WATTS

TOTAL WATTS → 25,453
PANEL AMPS → 71
HIGH PHASE AMPS → 75
HIGH PHASE LCL AMPS → 75
DEMAND LOAD AMPS → 71

1. PROVIDE MAIN BREAKER WITH SHUNT-TRIP CONNECTED TO GAS DETECTION SYSTEM.

AS-BUILT
Q. deStrand
Contract No. BUS-443B
Date NOV. 2000

REGISTERED PROFESSIONAL ENGINEER — SIGK WAI KAN — No. 9304 — Exp. 3-30-01 — ELECTRICAL — STATE OF CALIFORNIA

CONSTRUCTION CHANGE TABLE		
CHANGE	DATE	SHEET NUMBERS REVISED OR ADDED THIS CHANGE

STV Incorporated
ENGINEERS & PLANNERS
1055 WILSHIRE BLVD., SUITE 1455
LOS ANGELES, CA 90017

DESIGNED BY	S. CONNER	DATE 11/98
DRAWN BY	K. SPRADLING	11/98
CHECKED BY	M. NIEDERHAUS	11/98
MTDB PRJ. ENG.		

MTDB
Metropolitan Transit Development Board
1255 Imperial Avenue, Suite 1000, San Diego, Ca. 92101-7490 (619)231-1466

IMPERIAL AVENUE DIVISION
BUS MAINTENANCE FACILITY

ELECTRICAL PANEL SCHEDULES

SCALE	NONE
MTDB CONTRACT NO.	BUS-443B
DRAWING NO.	E30.2
SHEET NO.	94

MOTOR CONTROL CENTER: **EMCC**
VOLTAGE 480V,3ø,3W
BUS 100A BRACED FOR 14,000A. SYM

	PROTECTION					LOAD		DISCRIPTION	CONDUIT & WIRE	STARTER	CONTROLS			REMARKS
	POLE	MPC	BKR	FUSE	SW	HP	KW	AMPS				NO	NC	HOA	
1	3	3M		2	30	0.75	1.2	1.4	GAS SYSTEM EXH. FAN EF-1	3/4"C-3#12 & 1#12 GND.	MAGNETIC			YES	START FOR GAS DETECTION SYSTEM
2	3	3M		2	30	0.75	1.2	1.4	GAS SYSTEM EXH. FAN EF-1	3/4"C-3#12 & 1#12 GND.	MAGNETIC			YES	
3	3	3M		2	30	0.75	1.2	1.4	GAS SYSTEM EXH. FAN EF-1	3/4"C-3#12 & 1#12 GND.	MAGNETIC			YES	
4	3	3M		2	30	0.75	1.2	1.4	GAS SYSTEM EXH. FAN EF-1	3/4"C-3#12 & 1#12 GND.	MAGNETIC			YES	
5	3	3M		2	30	0.75	1.2	1.4	GAS SYSTEM EXH. FAN EF-1	3/4"C-3#12 & 1#12 GND.	MAGNETIC			YES	
6	3	3M		2	30	0.75	1.2	1.4	GAS SYSTEM EXH. FAN EF-1	3/4"C-3#12 & 1#12 GND.	MAGNETIC			YES	
7	3	3M		2	30	0.75	1.2	1.4	GAS SYSTEM EXH. FAN EF-1	3/4"C-3#12 & 1#12 GND.	MAGNETIC			YES	
8	3	3M		2	30	0.75	1.2	1.4	GAS SYSTEM EXH. FAN EF-1	3/4"C-3#12 & 1#12 GND.	MAGNETIC			YES	
9							0.0								
10							0.0								
11							0.0								
12							0.0								
13							0.0								
14							0.0								
15							0.0								
16							0.0								
17							0.0								
18							0.0								
19							0.0								
20							0.0								

9KW 1.0 A TOTAL CONNECTED LOAD
4 A 25% OF LARTGEST MOTOR
12.0 A TOTAL LCL LOAD

MOTOR CONTROL CENTER: **MCCA**
VOLTAGE 480V,3ø,3W
BUS 400A BRACED FOR 14,000A SYM
300A/3P MAIN BREAKER

	PROTECTION					LOAD			DISCRIPTION	CONDUIT & WIRE	STARTER	CONTROLS			REMARKS
	POLE	MPC	BKR	FUSE	SW	HP	KW	AMPS				NO	NC	HOA	
1	3		25	20	30	10	11.6	14	POWER UNIT PU-1A	3/4"C-3#12 & 1#12 GND.					SHUNT-TRIP ON BREAKER
2	3		25	20	30	10	11.6	14	POWER UNIT PU-1B	3/4"C-3#12 & 1#12 GND.					SHUNT-TRIP ON BREAKER
3	3		25	20	30	10	11.6	14	POWER UNIT PU-2A	3/4"C-3#12 & 1#12 GND.					SHUNT-TRIP ON BREAKER
4	3		25	20	30	10	11.6	14	POWER UNIT PU-2B	3/4"C-3#12 & 1#12 GND.					SHUNT-TRIP ON BREAKER
5	3		25	20	30		12.3	14.8	AC UNIT AC-3	3/4"C-3#12 & 1#12 GND.	MAGNETIC			YES	
6	3		40	30	30		19.4	23.4	AC UNIT AC-5	3/4"C-3#12 & 1#12 GND.	MAGNETIC			YES	
7	3		40	30	30		19.4	23.4	AC UNIT AC-4	3/4"C-3#12 & 1#12 GND.	MAGNETIC			YES	
8	3		25	20	30		12.3	14.8	AC UNIT AC-6	3/4"C-3#12 & 1#12 GND.	MAGNETIC			YES	
9	3		25	20	30	10	11.6	14	MAKE-UP AIR UNIT HV-1	3/4"C-3#12 & 1#12 GND.	MAGNETIC			YES	CONTACT IN GAS DETECTION SYSTEM TO STOP UNIT
10	3		25	20	30		12.3	14.8	AC UNIT AC-1	3/4"C-3#12 & 1#12 GND.	MAGNETIC			YES	
11	3		25	20	30		12.0	14.8	AC UNIT AC-2	3/4"C-3#12 & 1#12 GND.	MAGNETIC			YES	
12	3		20	17.5	30	7.5	9.1	11	MAKE-UP AIR UNIT HV-2	3/4"C-3#12 & 1#12 GND.	MAGNETIC			YES	CONTACT IN GAS DETECTION SYSTEM TO STOP UNIT
13	3	3M				0.75	1.2	1.4	EXHAUST FAN EF-5	3/4"C-3#12 & 1#12 GND.	MAGNETIC			YES	
14	3		20	12	30	5	6.3	7.6	DUST COLLECTOR	3/4"C-3#12 & 1#12 GND.	MAGNETIC			YES	
15	3		15	8	30	3	4.0	4.8	PAINT SPRAY BOOTH EXHAUST FAN EF-9	3/4"C-3#12 & 1#12 GND.	MAGNETIC			YES	
16	3		20	12	30	5	6.3	7.6	MAKE-UP AIR UNIT HV-3	3/4"C-3#12 & 1#12 GND.	MAGNETIC			YES	
17	3		20	17.5	30	7.5	9.1	11	EXHAUST FAN EF-3	3/4"C-3#12 & 1#12 GND.	MAGNETIC			YES	CONTACT IN GAS DETECTION SYSTEM TO STOP UNIT
18	3		25	20	30	10	11.6	14	POWER UNIT PU-3	3/4"C-3#12 & 1#12 GND.	–		–		SHUNT-TRIP ON BREAKER
19	3		15	8	30	3	4.0	4.8	EXHAUST FAN EF-6	3/4"C-3#12 & 1#12 GND.	MAGNETIC			YES	CONTACT IN GAS DETECTION SYSTEM TO STOP UNIT
20							0.0								

191KW 230 A TOTAL CONNECTED LOAD
6 A 25% OF LARGEST MOTOR
236 A TOTAL LCL LOAD

MOUNTING SURFACE(IN NEMA 1 ENCLOSURE) **PANEL EA** LOCATION ELECTRIC ROOM
VOLTAGE 480/277 PHASE 3 WIRE 4 (EMERGENCY POWER) 14,000 AIC SYM 100A BUS M.L.O. MAIN

LOCATION	WATTAGE øA	WATTAGE øB	WATTAGE øC	LTG	RECS	MISC	POLE	BKR	CIR	PH	CIR	BKR	POLE	MISC	RECS	LTG	WATTAGE øA	WATTAGE øB	WATTAGE øC	LOCATION
UNDEVELOPED SPACE LIGHTING	249			8		1	20	1	A	2	100		1				3102			SUBFEED EMCC
PARTS STORAGE LIGHTING		2143		30		1	20	3	B	4								3102		SUBFEED EMCC
GROUND FLOOR CORR. LIGHTING			1178	19		1	20	5	C	6	3					3102				SUBFEED EMCC
MAINTENANCE BAY LIGHTING	3544			16		1	20	7	A	8	50					6560				SUBFEED EL
SPACE FOR SHUNT-TRIP		–		7		–	–	9	B	10						6400				SUBFEED EL
SPARE			–	10		1	20	11	C	12	3							6600		SUBFEED EL
SPARE	–			8		1	20	13	A	14	20	1				–				SPARE
SPARE		–		7		1	20	15	B	16	20	1					–			SPARE
SPARE			–	15		1	20	17	C	18	20	1						–		SPARE
SPARE	–					1	20	19	A	20	20	1				–				SPARE
SPARE		–				1	20	21	B	22	20	1					–			SPARE
SPARE			–			1	20	23	C	24	20	1			35			2635		SECOND FLR. TELEPHONE INFO. LTG.
								25	A	26										
								27	B	28										
								29	C	30										
								31	A	32										
								33	B	34										
								35	C	36										
								37	A	38										
								39	B	40										
								41	C	42										
	3793	2143	1178														9662	9502	12337	

WATTS/LINE

TOTAL øA: 13455 WATTS
TOTAL øB: 11645 WATTS
TOTAL øC: 13515 WATTS

TOTAL WATTS ——→ 38,615
PANEL AMPS ——→ 46
HIGH PHASE AMPS ——→ 49
HIGH PHASE LCL AMPS ——→ 54

1. PROVIDE SHUNT-TRIP CONNECTED TO GAS DETECTION SYSTEM.

MOUNTING SURFACE(IN NEMA 1 ENCLOSURE) **PANEL N** LOCATION ELECTRIC ROOM
VOLTAGE 120/208 PHASE 3 WIRE 4 10,000 AIC SYM 100A BUS M.L.O. MAIN

LOCATION	WATTAGE øA	WATTAGE øB	WATTAGE øC	LTG	RECS	MISC	POLE	BKR	CIR	PH	CIR	BKR	POLE	MISC	RECS	LTG	WATTAGE øA	WATTAGE øB	WATTAGE øC	LOCATION
ADMIN. MNT. MGR.	1080			6		1	20	1	A	2	20	1					–			SPARE
ADMIN. MNT. MGR.		1080		6		1	20	3	B	4	20	1						–		SPARE
ADMIN. MNT. MGR.			900	5		1	20	5	C	6	20	1							–	SPARE
ADMIN. MNT. MGR.	1080			6		1	20	7	A	8	20	1					–			SPARE
ADMIN. MNT. MGR.		900		5		1	20	9	B	10	20	1						–		SPARE
ADMIN. MNT. MGR.			1080	6		1	20	11	C	12	20	1							–	SPARE
ADMIN. MNT. MGR.	900			5		1	20	13	A	14	20	1					–			SPARE
ADMIN. MNT. MGR.		900		3		1	20	15	B	16	20	1						–		SPARE
SPARE			–			1	20	17	C	18	20	1		3					720	COMPUTER CLASS
ADMIN. MNT. MGR.	900			5		1	20	19	A	20	20	1	1				700			TOILET EXHAUST FAN
INSTRUCTOR'S OFFICE		1080		6		1	20	21	B	22	20	1		3				480		COMPUTER CLASS
INSTRUCTOR'S OFFICE			1080	6		1	20	23	C	24	20	1		2					720	COMPUTER CLASS
INSTRUCTOR'S OFFICE	1080			6		1	20	25	A	26	20	1		3			1200			OVERHEAD PROJECTORS
INSTRUCTOR'S OFFICE		1080		6		1	20	27	B	28	20	1			11			990		TASK LIGHTS
TRAINING			1080	6		1	20	29	C	30	20	1		3					540	ROOF TOP RECEPTACLES
SPACE ONLY	–						–	–	31	A	32	20	1				–			SPARE
SPACE ONLY		–					–	–	33	B	34	20	1					–		SPARE
SPACE ONLY			–				–	–	35	C	36	20	1						–	SPARE
SPACE ONLY	–						–	–	37	A	38	–	–				–			SPACE ONLY
SPACE ONLY		–					–	–	39	B	40	–	–					–		SPACE ONLY
SPACE ONLY			–				–	–	41	C	42	–	–						–	SPACE ONLY
	5040	5040	4140														1900	1470	1980	

WATTS/LINE

TOTAL øA: 6940 WATTS
TOTAL øB: 6510 WATTS
TOTAL øC: 6120 WATTS

TOTAL WATTS ——→ 19,570
PANEL AMPS ——→ 54
HIGH PHASE AMPS ——→ 58
HIGH PHASE LCL AMPS ——→ 58

AS-BUILT
Contract No. BUS-443B
Date NOV. 2000

REGISTERED PROFESSIONAL ENGINEER — No. 9306 — ELECTRICAL — STATE OF CALIFORNIA

KANNAD PROJECT NUMBER 98007

CONSTRUCTION CHANGE TABLE

CHANGE	DATE	SHEET NUMBERS REVISED OR ADDED THIS CHANGE
4	4/17/00	SECOND FLOOR INTERIOR IMPROVEMENTS

STV Incorporated
ENGINEERS & PLANNERS
1000 WILSHIRE BLVD., SUITE 1455
LOS ANGELES, CA. 90017

DESIGNED BY	M. NIEDERHAUS	6/00
DRAWN BY	K. SPRADLING	6/00
CHECKED BY	M. NIEDERHAUS	6/00
MTDB PRJ. ENG.		

MTDB
Metropolitan Transit Development Board
1255 Imperial Avenue, Suite 1000, San Diego, Ca. 92101-7490 (619)231-1466

IMPERIAL AVENUE DIVISION BUS MAINTENANCE FACILITY

ELECTRICAL SCHEDULES

SCALE	NONE
MTDB CONTRACT NO.	BUS-443B
DRAWING NO.	E30.3
SHEET NO.	95

MOTOR CONTROL CENTER: EMCC
VOLTAGE 480Y/3ø,3W
BUS 100A BRACED FOR 14,000A. SYM

	PROTECTION					LOAD			DISCRIPTION	CONDUIT & WIRE	STARTER	CONTROLS			REMARKS
	POLE	MPC	BKR	FUSE	SW	HP	KW	AMPS				NO	NC	HOA	
1	3	3M		2	30	0.75	1.2	1.4	GAS SYSTEM EXH. FAN EF-1	3/4"C-3#12 & 1#12 GND.	MAGNETIC			YES	START FOR GAS DETECTION SYSTEM
2	3	3M		2	30	0.75	1.2	1.4	GAS SYSTEM EXH. FAN EF-1	3/4"C-3#12 & 1#12 GND.	MAGNETIC			YES	
3	3	3M		2	30	0.75	1.2	1.4	GAS SYSTEM EXH. FAN EF-1	3/4"C-3#12 & 1#12 GND.	MAGNETIC			YES	
4	3	3M		2	30	0.75	1.2	1.4	GAS SYSTEM EXH. FAN EF-1	3/4"C-3#12 & 1#12 GND.	MAGNETIC			YES	
5	3	3M		2	30	0.75	1.2	1.4	GAS SYSTEM EXH. FAN EF-1	3/4"C-3#12 & 1#12 GND.	MAGNETIC			YES	
6	3	3M		2	30	0.75	1.2	1.4	GAS SYSTEM EXH. FAN EF-1	3/4"C-3#12 & 1#12 GND.	MAGNETIC			YES	
7	3	3M		2	30	0.75	1.2	1.4	GAS SYSTEM EXH. FAN EF-1	3/4"C-3#12 & 1#12 GND.	MAGNETIC			YES	
8	3	3M		2	30	0.75	1.2	1.4	GAS SYSTEM EXH. FAN EF-1	3/4"C-3#12 & 1#12 GND.	MAGNETIC			YES	
9							0.0								
10							0.0								
11							0.0								
12							0.0								
13							0.0								
14							0.0								
15							0.0								
16							0.0								
17							0.0								
18							0.0								
19							0.0								
20							0.0								
							9KW	1.0 A	TOTAL CONNECTED LOAD						
								4 A	25% OF LARTGEST MOTOR						
								12.0 A	TOTAL LCL LOAD						

MOTOR CONTROL CENTER: MCCA
VOLTAGE 480Y/3ø,3W
BUS 400A BRACED FOR 14,000A SYM
300A/3P MAIN BREAKER

	PROTECTION					LOAD			DISCRIPTION	CONDUIT & WIRE	STARTER	CONTROLS			REMARKS
	POLE	MPC	BKR	FUSE	SW	HP	KW	AMPS				NO	NC	HOA	
1	3		25	20	30	10	11.6	14	POWER UNIT PU-1A	3/4"C-3#12 & 1#12 GND.					SHUNT-TRIP ON BREAKER
2	3		25	20	30	10	11.6	14	POWER UNIT PU-1B	3/4"C-3#12 & 1#12 GND.					SHUNT-TRIP ON BREAKER
3	3		25	20	30	10	11.6	14	POWER UNIT PU-2A	3/4"C-3#12 & 1#12 GND.					SHUNT-TRIP ON BREAKER
4	3		25	20	30	10	11.6	14	POWER UNIT PU-2B	3/4"C-3#12 & 1#12 GND.					SHUNT-TRIP ON BREAKER
5	3		25	20	30		12.3	14.8	AC UNIT AC-3	3/4"C-3#12 & 1#12 GND.	MAGNETIC			YES	
6	3		40	30	30		19.4	23.4	AC UNIT AC-5	3/4"C-3#12 & 1#12 GND.	MAGNETIC			YES	
7	3		40	30	30		19.4	23.4	AC UNIT AC-4	3/4"C-3#12 & 1#12 GND.	MAGNETIC			YES	
8	3		25	20	30		12.3	14.8	AC UNIT AC-6	3/4"C-3#12 & 1#12 GND.	MAGNETIC			YES	
9	3		25	20	30	10	11.6	14	MAKE-UP AIR UNIT HV-1	3/4"C-3#12 & 1#12 GND.	MAGNETIC			YES	CONTACT IN GAS DETECTION SYSTEM TO STOP UNIT
10	3		25	20	30		12.3	14.8	AC UNIT AC-1	3/4"C-3#12 & 1#12 GND.	MAGNETIC			YES	
11	3		25	20	30		12.0	14.8	AC UNIT AC-2	3/4"C-3#12 & 1#12 GND.	MAGNETIC			YES	
12	3		20	17.5	30	7.5	9.1	11	MAKE-UP AIR UNIT HV-2	3/4"C-3#12 & 1#12 GND.	MAGNETIC			YES	CONTACT IN GAS DETECTION SYSTEM TO STOP UNIT
13	3	3M				0.75	1.2	1.4	EXHAUST FAN EF-5	3/4"C-3#12 & 1#12 GND.	MAGNETIC			YES	
14	3		20	12	30	5	6.3	7.6	DUST COLLECTOR	3/4"C-3#12 & 1#12 GND.	MAGNETIC			YES	
15	3		15	8	30	3	4.0	4.8	PAINT SPRAY BOOTH EXHAUST FAN EF-9	3/4"C-3#12 & 1#12 GND.	MAGNETIC			YES	
16	3		20	12	30	5	6.3	7.6	MAKE-UP AIR UNIT HV-3	3/4"C-3#12 & 1#12 GND.	MAGNETIC			YES	
17	3		20	17.5	30	7.5	9.1	11	EXHAUST FAN EF-3	3/4"C-3#12 & 1#12 GND.	MAGNETIC			YES	CONTACT IN GAS DETECTION SYSTEM TO STOP UNIT
18	3		25	20	30	10	11.6	14	POWER UNIT PU-3	3/4"C-3#12 & 1#12 GND.	–		–		SHUNT-TRIP ON BREAKER
19	3		15	8	30	3	4.0	4.8	EXHAUST FAN EF-6	3/4"C-3#12 & 1#12 GND.	MAGNETIC			YES	CONTACT IN GAS DETECTION SYSTEM TO STOP UNIT
20							0.0								
							191KW	230 A	TOTAL CONNECTED LOAD						
								6 A	25% OF LARGEST MOTOR						
								236 A	TOTAL LCL LOAD						

MOUNTING SURFACE(IN NEMA 1 ENCLOSURE) **PANEL EA** LOCATION ELECTRIC ROOM
VOLTAGE 480/277 PHASE 3 WIRE 4 (EMERGENCY POWER) 14,000 AIC SYM 100A BUS M.L.O. MAIN

LOCATION	WATTAGE øA	WATTAGE øB	WATTAGE øC	LTG	RECS	MPLS	BKR	CKT	PHR	CKT	BKR	POLS	MLSC	RETG	LTG	WATTAGE øA	WATTAGE øB	WATTAGE øC	LOCATION
UNDEVELOPED SPACE LIGHTING	249			8			1	20	1	A	2	100		1		3102			SUBFEED EMCC
PARTS STORAGE LIGHTING		2143		30			1	20	3	B	4						3102		SUBFEED EMCC
GROUND FLOOR CORR. LIGHTING			1178	19			1	20	5	C	6		3					3102	SUBFEED EMCC
1 MAINTENANCE BAY LIGHTING	3544			16			1	20	7	A	B	30				6560			SUBFEED EL
SPACE FOR SHUNT-TRIP		–		7			–	–	9	B	10						6400		SUBFEED EL
SPARE			–	10			1	20	11	C	12		3					6600	SUBFEED EL
SPARE	–			8			1	20	13	A	14	20	1			–			SPARE
SPARE		–		7			1	20	15	B	16	20	1				–		SPARE
SPARE			–	15			1	20	17	C	18	20	1					–	SPARE
SPARE	–						1	20	19	A	20	20	1			–			SPARE
SPARE		–					1	20	21	B	22	20	1				–		SPARE
SPARE			–				1	20	23	C	24	20	1					–	SPARE
									25	A	26								
									27	B	28								
									29	C	30								
									31	A	32								
									33	B	34								
									35	C	36								
									37	A	38								
									39	B	40								
									41	C	42								
	3793	2143	1178	WATTS/LINE												9662	9502	12337	

TOTAL øA: 13455 WATTS
TOTAL øB: 11645 WATTS
TOTAL øC: 13515 WATTS

TOTAL WATTS ——→ 38,615
PANEL AMPS ——→ 46
HIGH PHASE AMPS ——→ 49
HIGH PHASE LCL AMPS —→ 54

1. PROVIDE SHUNT-TRIP CONNECTED TO GAS DETECTION SYSTEM.

MOUNTING SURFACE(IN NEMA 1 ENCLOSURE) **PANEL N** LOCATION ELECTRIC ROOM
VOLTAGE 120/208 PHASE 3 WIRE 4 10,000 AIC SYM 100A BUS M.L.O. MAIN

LOCATION	WATTAGE øA	WATTAGE øB	WATTAGE øC	LTG	RECS	MPLS	BKR	CKT	PHR	CKT	BKR	POLS	MLSC	RETG	LTG	WATTAGE øA	WATTAGE øB	WATTAGE øC	LOCATION
SPARE	1080			6			1	20	1	A	2	20	1	3		–			VAV CONTROLLER
SPARE		1080		6			1	20	3	B	4	20	1	3			–		SPARE
SPARE			900	5			1	20	5	C	6	20	1	1				–	SPARE
RECEPTACLES	1080			6			1	20	7	A	8	20	1	1		–			SPARE
RECEPTACLES		900		5			1	20	9	B	10	20	1	3			–		SPARE
RECEPTACLES			1080	6			1	20	11	C	12	20	1	3				–	SPARE
RECEPTACLES	900			5			1	20	13	A	14	20	1	1		–			SPARE
ADMIN. MNT. MGR.		900		3			1	20	15	B	16	20	1	1			–		SPARE
COPY MACHINE			1000	1			1	20	17	C	18	20	1	3				720	COMPUTER CLASS
ADMIN. MNT. MGR.	900			5			1	20	19	A	20	20	1	1		700			TOILET EXHAUST FAN
INSTRUCTOR'S OFFICE		1080		6			1	20	21	B	22	20	1	3			480		COMPUTER CLASS
INSTRUCTOR'S OFFICE			1080	6			1	20	23	C	24	20	1	2				720	COMPUTER CLASS
INSTRUCTOR'S OFFICE	1080			6			1	20	25	A	26	20	1			1200			OVERHEAD PROJECTORS
INSTRUCTOR'S OFFICE		1080		6			1	20	27	B	28	20	1				990		TASK LIGHTS
TRAINING			1080	6			1	20	29	C	30	20	1					540	TASK LIGHTS
SPACE ONLY	–						–	–	31	A	32	–	–			–			SPARE
SPACE ONLY		–					–	–	33	B	34	–	–				–		SPARE
SPACE ONLY			–				–	–	35	C	36	–	–					–	SPARE
SPACE ONLY	–						–	–	37	A	38	–	–			–			SPACE ONLY
SPACE ONLY		–					–	–	39	B	40	–	–				–		SPACE ONLY
SPACE ONLY			–				–	–	41	C	42	–	–					–	SPACE ONLY
	5040	5040	5140	WATTS/LINE												1900	1470	1980	

TOTAL øA: 6940 WATTS
TOTAL øB: 6510 WATTS
TOTAL øC: 6120 WATTS

TOTAL WATTS ——→ 19,570
PANEL AMPS ——→ 54
HIGH PHASE AMPS ——→ 56
HIGH PHASE LCL AMPS—→ 58

AS-BUILT
A. deBrand
Contract No. BUS-443B
Date NOV. 2000

REGISTERED PROFESSIONAL ENGINEER — KIRK WAY ARIE — No. 9304 — Exp. 6-30-01 — ELECTRICAL — STATE OF CALIFORNIA

CONSTRUCTION CHANGE TABLE		
CHANGE	DATE	SHEET NUMBERS REVISED OR ADDED THIS CHANGE

STV Incorporated
ENGINEERS & PLANNERS
1055 WILSHIRE BLVD., SUITE 1455
LOS ANGELES, CA 90017

DESIGNED BY S. CONNER	DATE 11/98	
DRAWN BY K. SPRADLING	11/98	
CHECKED BY M. NIEDERHAUS	11/98	
MTDB PRJ. ENG.		

MTDB
Metropolitan Transit Development Board
1255 Imperial Avenue, Suite 1000, San Diego, Ca. 92101-7490 (619)231-1466

IMPERIAL AVENUE DIVISION
BUS MAINTENANCE FACILITY

ELECTRICAL SCHEDULES

SCALE	NONE
MTDB CONTRACT NO.	BUS-443B
DRAWING NO.	E30.3
SHEET NO.	95

CERTIFICATE OF COMPLIANCE - Lighting Part 1 of 2 LTG-1

PROJECT NAME	DATE
PROJECT ADDRESS	Building Permit #
PRINCIPAL DESIGNER - LIGHTING: TONY KAN	TELEPHONE (619)547-1100
DOCUMENTATION AUTHOR: STANLEY CONNER	TELEPHONE (619)547-1100
	Checked by/Date Enforcement Agency Use

GENERAL INFORMATION

DATE OF PLANS	BUILDING CONDITIONED FLOOR AREA 44816					
BUILDING TYPE	[X] NONRESIDENTIAL	[ ] HIGH RISE RESIDENTIAL	[ ] HOTEL/MOTEL GUEST ROOM			
PHASE OF CONSTRUCTION	[X] NEW CONSTRUCTION	[ ] ADDITION	[ ] ALTERATION			
METHOD OF LIGHTING COMPLIANCE	[X] COMPLETE BUILDING	[ ] AREA CATEGORY	[ ] TAILORED	[ ] PERFORMANCE		

STATEMENT OF COMPLIANCE

This Certificate of Compliance lists the building features and performance specifications needed to comply wit Title 24, Parts 1 and 6 of the California Code of Regulations. This certificate applies only to building lighting requirements.

The Principal Lighting Designer hereby certifies that the proposed building design represented in this set of construction documents is consistent with the other compliance forms and worksheets, with the specifications, and with any other calculations submitted with this permit application. The proposed building has been designed to meet the lighting requirements contained in sections 110, 119, 130 through 132, and 146 or 149.

Please check one:

[ ] I hereby affirm that I am eligible under the provisions of Division 3 of the Business and Professions Code to sign this document as the person responsible for its preparation; and that I am a civil engineer, electrical engineer or architect.

[ ] I affirm that I am eligible under the exemption to Division 3 of the Business and Professions Code by Section 5537.2 of the Business and Professions Code to sign this document as the person responsible for its preparation; and that I am a licensed contractor preparing documents for work that I have contracted to perform.

[X] I affirm that I am eligible under the exemption to Division 3 of the Business and Professions Code by Section _____ of the _____ Code to sign this document as the person responsible for its preparation; and for the following reason: _____

PRINCIPAL LIGHTING DESIGNER-NAME	SIGNATURE	LIC. NO.	DATE
TONY KAN			

LIGHTING MANDATORY MEASURES

Indicate location on plans of Note Block for Mandatory Measures: E30.4

INSTRUCTIONS TO APPLICANT

For detailed instructions on the use of this and Energy Efficiency Standards compliance forms, please refer to the Nonresidential Manual published by the California Energy Commission.
LTG-1: Required on plans for all submittals. Part 2 may be incorporated in schedules on plans.
LTG-2: Required for all submittals.
LTG-3: Optional. Use only if lighting control credits are taken.
LTG-4: Optional. Use only if Tailored Method is used. Parts 2 and 3 used only if applicable.

Nonresidential Compliance Form December 1991

CERTIFICATE OF COMPLIANCE - Lighting Part 2 of 2 LTG-1

PROJECT NAME | DATE

INSTALLED LIGHTING SCHEDULE

LUMINAIRE NAME (eg. Type-1, Type-2, etc.)	LAMPS TYPE I	F	H	NO. OF LAMPS	WATTS/LAMP	BALLASTS TYPE S	E*	O*	NO./LUMINAIRE	NOTE TO FIELD
A,A1			X	1	250	X			1	
B,C,D,F,H		X		2	32	X			1	
G,P		X		1	32	X			1	
J		X		1	26	X			1	
K		X		2	26	X			1	
L			X	1	250	X			1	
N		X		2	32	X			1	

*Provide Supporting Documentation

MANDATORY AUTOMATIC CONTROLS

CONTROL LOCATION (Room #)	CONTROL IDENTIFICATION	CONTROL TYPE (Auto Time Switch, Exterior, etc.)	SPACE CONTROLLED	NOTE TO FIELD
OFFICE AREAS	S	SWITCH & OCCUP SNSRS	ENTIRE AREA	
STORAGE/UTILITY	S	SWITCH & OCCUP SNSRS	ENTIRE AREA	
FUTURE SPACE	S	SWITCH	ENTIRE AREA	
BODY/PARTS SHOP	S	SWITCH	ENTIRE AREA	
MAINT. AREA	S	SWITCH	ENTIRE AREA	

CONTROLS FOR CREDIT

CONTROL LOCATION (Room # or Dwg. #)	CONTROL IDENTIFICATION	CONTROL TYPE (Occupant, Daylight, Dimming, etc.)	LUMINAIRES CONTROLLED TYPE	# OF LUMIN.	NOTE TO FIELD

NOTES TO FIELD - For Building Department Use Only

Nonresidential Compliance Form December 1991

NOTE: BUILDING IS 24 HOUR OPERATION.

LIGHTING COMPLIANCE SUMMARY LTG-2

PROJECT NAME | DATE

ACTUAL LIGHTING POWER

LUMINAIRE NAME	DESCRIPTION	NUMBER OF LUMINAIRES	WATTS PER LUMINAIRE (Including Ballast)	CEC DEFAULT Y	N*	TOTAL WATTS
A,A1	HIGH BAY FIXTURE	78	295	X		23,101
B,C	INDUSTRIAL FIXTURES	79	62	X		4,898
D,F	4' FLUOR. FIXTURE, 2-LAMP	75	62	X		4,650
H,N	4' FLUOR. FIXTURE, 2-LAMP	56	62	X		3,472
G,P	4' FLUOR. FIXTURE, 1-LAMP	73	31	X		2,263
J	DOWNLIGHT, 1-LAMP	3	31	X		93
K	DOWNLIGHT, 2-LAMP	2	62	X		124
L	PIT LIGHTS	4	295	X		1,060

SUBTOTAL FROM THIS PAGE: 39,570
PLUS SUBTOTAL FROM CONTINUATION PAGE:
LESS CONTROL CREDIT WATTS (FROM LTG-3):
(*If not using the CEC Default value, please provide supporting documentation.) ADJUSTED ACTUAL WATTS:

ALLOWED LIGHTING POWER (Choose One Method)

COMPLETE BUILDING METHOD

BUILDING CATEGORY (From Table 2-53M)	WATTS PER SF	COMPLETE BLDG. AREA	ALLOWED WATTS
GENERAL COMMERCIAL & INDUSTRIAL WORK BLDG.	44,816	1.2	53,779

AREA CATEGORY METHOD

AREA CATEGORY (From Table 2-53M)	WATTS PER SF	COMPLETE BLDG. AREA	ALLOWED WATTS
TOTALS		AREA	WATTS

TAILORED OR PERFORMANCE METHOD

[ ] TAILORED [ ] PERFORMANCE TOTAL ALLOWED WATTS (From LTG-4 or from computer run.)

Nonresidential Compliance Form December 1991

MANDATORY MEASURES

[X] BUILDING LIGHTING SHUT-OFF
NOT APPLICABLE

[X] OVERRIDE FOR BUILDING LIGHTING SHUT-OFF
NOT APPLICABLE

[X] AUTOMATIC CONTROL DEVICES CERTIFIED
ALL AUTOMATIC DEVICES SHALL BE U.L. LISTED, CERTIFIED AND AND INSTALLED PER THE MANUFACTURER'S REQUIREMENTS.

[X] FLUORESCENT BALLASTS AND LUMINAIRES CERTIFIED
ALL FLUORESCENT FIXTURES SHALL BE U.L. LISTED, CERTIFIED AND INSTALLED PER THE MANUFACTURER'S REQUIREMENTS.

[X] TANDEM WIRING FOR 2-LAMP BALLASTS
ALL ONE AND THREE LAMP FLUORESCENT FIXTURES SHALL BE TANDEM WIRED WITH TWO-LAMP BALLASTS BY STANDARDS 132.

[X] INDIVIDUAL ROOM/AREA CONTROLS
EACH ROOM AND AREA IS EQUIPPED WITH A SEPARATE SWITCH OR OCCUPANCY SENSOR DEVICE FOR EACH AREA WITH FLOOR-TO CEILING WALLS.

[X] UNIFORM REDUCTION FOR INDIVIDUAL ROOMS
ALL ROOMS AND AREAS GREATER THAN 100 SQUARE FEET AND MORE THAN 1.2 WATTS PER SQUARE FOOT OF LIGHTING LOAD SHALL BE CONTROLLED WITH BI-LEVEL SWITCHING FOR UNIFORM REDUCTION OG LIGHTING WITHIN THE ROOM.

[X] DAYLIT AREA CONTROL
ALL ROOMS WITH WINDOWS AND SKYLIGHTS, THAT ARE GREATER THAN 250 SQUARE FEET, AND THAT ALLOW FOR EFFECTIVE USE OF DAYLIGHT IN THE AREA SHALL HAVE 50% OF THE LAMPS IN EACH DAYLIT AREA CONTROLLED BY A SEPARATE SWITCH.

[X] CONTROL OF EXTERIOR LIGHTS
EXTERIOR BUILDING LIGHT SHALL BE CONTROLLED BY TIME SWITCHES.

AS-BUILT
Contract No. BUS-443B
Date NOV. 2000

REGISTERED PROFESSIONAL ENGINEER KARL WAI KAN No. 9304 Exp. 8-30-01 ELECTRICAL STATE OF CALIFORNIA

CONSTRUCTION CHANGE TABLE

CHANGE	DATE	SHEET NUMBERS REVISED OR ADDED THIS CHANGE

STV Incorporated
ENGINEERS & PLANNERS
1055 WILSHIRE BLVD., SUITE 1455
LOS ANGELES, CA 90017

		DATE
DESIGNED BY	S. CONNER	11/98
DRAWN BY	K. SPRADLING	11/98
CHECKED BY	M. NIEDERHAUS	11/98
MTDB PRJ. ENG.		

MTDB
Metropolitan Transit Development Board
1255 Imperial Avenue, Suite 1000, San Diego, Ca. 92101-7490 (619)231-1466

IMPERIAL AVENUE DIVISION
BUS MAINTENANCE FACILITY

TITLE 24 SCHEDULES

SCALE: NONE
MTDB CONTRACT NO.: BUS-443B
DRAWING NO.: E30.4
SHEET NO.: 96

TRAFFIC CONTROL NOTES

1. VALIDATION. THIS TRAFFIC CONTROL PLAN IS NOT VALID UNTIL WORK DATES ARE APPROVED. CONTRACTOR SHALL SUBMIT TWO (2) REDUCED COPIES OF TRAFFIC CONTROL PLANS (11"X17") TO THE TRAFFIC CONTROL PLAN COUNTER, LAND DEVELOPMENT REVIEW DIVISION, 5TH FLOOR DEVELOPMENT SERVICES CENTER, CITY OPERATIONS BUILDING, 1222 FIRST AVENUE, SAN DIEGO. A MINIMUM OF TWO (2) WORKING DAYS PRIOR TO STARTING WORK.

2. STANDARD. THIS TRAFFIC CONTROL PLAN SHALL CONFORM TO THE MOST RECENT ADOPTED EDITION OF EACH OF THE FOLLOWING MANUALS:

   CITY OF SAN DIEGO STANDARD DRAWINGS, APPENDIX "A", CALTRANS MANUAL OF TRAFFIC CONTROLS FOR CONSTRUCTION AND MAINTENANCE WORK ZONES; AND STANDARD SPECIFICATIONS FOR PUBLIC WORKS CONSTRUCTION INCLUDING REGIONAL AND CITY OF SAN DIEGO SUPPLEMENT AMENDMENTS.

3. NOTIFICATION. THE CONTRACTOR SHALL NOTIFY ALL AFFECTED AGENCIES AT LEAST FIVE (5) WORKING DAYS IN ADVANCE OF ANY STREET OR ALERT CLOSURE OR IMPLEMENTING ANY CONSTRUCTION DETOUR.

A. FIRE DEPARTMENT DISPATCH	(ST. OR ALLEY CLOSURE)	573-1300
B. POLICE DEPARTMENT DISPATCH	(ST. OR ALLEY CLOSURE)	531-2000
C. SAN DIEGO TRANSIT AUTHORITY	(BUS STOPS)	238-0100 EXT. 424
D. TRASH PICKUP		432-5060
E. TRASH SIGNALS		525-8651
F. COMMUNICATION AND ELECTRICAL	(TRAFFIC SIGNALS)	525-8650
G. WASTE MANAGEMENT	(REFUSE COLLECTION)	492-5060
H. UNDERGROUND SERVICE ALERT	(ANY EXCAVATION)	1-800-422-4133

   THE CONTRACTOR SHALL NOTIFY PROPERTY OWNERS AND TENANTS A MINIMUM OF FIVE (5) WORKING DAYS PRIOR TO CLOSURE OF DRIVEWAYS. THE CONTRACTOR SHALL POST SIGNS NOTIFYING THE PUBLIC A MINIMUM OF FIVE (5) WORKING DAYS PRIOR TO CLOSURE OF STREETS.

   THE CONTRACTOR SHALL NOTIFY FIELD DIVISION AND ARRANGE FOR INSPECTION A MINIMUM OF FIVE (5) WORKING DAYS PRIOR TO STARTING ANY WORK INVOLVING NIGHTTIME OR WEEKEND HOURS.

4. POSTING PARKING RESTRICTIONS. THE CONTRACTOR SHALL BE RESPONSIBLE FOR POSTING TOW-AWAY/NO PARKING SIGNS TWENTY-FOUR (24) HOURS IN ADVANCE OF PARKING REMOVAL. SIGNS SHALL INDICATE SPECIFIC DAYS, DATES AND TIMES OF RESTRICTIONS. PARKING METERS SHALL BE BAGGED WHERE APPLICABLE.

5. EXCAVATIONS. EXCEPT WHEN OTHERWISE SHOWN THE PLANS, ALL TRENCHES SHALL BE BACKFILLED OR TRENCH-PLATED AT THE END OF EACH DAY. AN ASPHALT RAMP SHALL BE PLACED AROUND EACH TRENCH PLATE TO PREVENT THE PLATE FROM BEING DISLODGED. UPON COMPLETION OF EXCAVATION BACKFILL, THE CONTRACTOR SHALL PROVIDE A SATISFACTORY SURFACE FOR TRAFFIC. WHEN CONSTRUCTION OPERATIONS ARE NOT ACTIVELY IN PROGRESS, THE CONTRACTOR SHALL MAINTAIN ALL TRAVELED LANES ON THE ROADWAY, EXCEPT WHEN OTHERWISE SHOWN ON THE PLANS.

6. RESTORATION OF ROADWAY. THE CONTRACTOR SHALL REPAIR OR REPLACE ALL EXISTING IMPROVEMENTS WITHIN THE RIGHT-OF-WAY WHICH ARE NOT DESIGNATED FOR PERMANENT REMOVAL (TRAFFIC SIGNS, STRIPING, PAVEMENT MARKERS, PAVEMENT MARKINGS, LEGENDS, CURB MARKINGS, LOOP DETECTORS, TRAFFIC SIGNAL EQUIPMENT, ETC.) WHICH ARE DAMAGED OR REMOVED AS A RESULT OF OPERATIONS. REPAIRS AND REPLACEMENTS SHALL BE A MINIMUM OF EQUAL TO EXISTING IMPROVEMENTS.

7. CHANGES IN WORK. THE CITY TRAFFIC ENGINEER RESERVES THE RIGHT TO OBSERVE THESE TRAFFIC CONTROL PLANS IN OPERATION AND TO MAKE ANY CHANGES AS FIELD CONDITIONS WARRANT. ANY CHANGES SHALL SUPERCEDE THESE PLANS.

8. WORKING HOURS SHALL BE AS SHOWN ON THE PLANS, AND CONTRACTOR SHALL MAINTAIN THE FULL WIDTH OF ALL TRAVELED LANES ON EXISTING ROADWAYS DURING THE NON-WORKING HOURS AND AT ALL TIMES ON SATURDAYS, SUNDAYS, AND LEGAL HOLIDAYS. WHEN CONSTRUCTION OPERATORS ARE NOT ACTIVELY IN PROGRESS, THE CONTRACTOR SHALL MAINTAIN ALL TRAVELED LANES OF THE ROADWAY. ANY DEVIATION FROM THESE REQUIREMENTS SHALL BE APPROVED BY THE CITY TRAFFIC ENGINEER.

9. UNAUTHORIZED CHANGES AND USES. CAUTION: THE ENGINEER PREPARING THESE PLANS WILL NOT BE RESPONSIBLE FOR, OR LIABLE FOR UNAUTHORIZED CHANGES TO OR USES OF THESE PLANS.

10. ALL WORK SHALL BE PERFORMED DURING HOURS AS INDICATED ON THE PLANS. ALL TRENCHES SHALL BE BACKFILLED OR TRENCH PLATED AT THE END OF EACH WORK DAY. UPON COMPLETION OF TRENCH BACKFILL, THE SURFACE OF THE ROADWAY SHALL BE BROUGHT TO A SMOOTH, EVEN CONDITION, FREE OF HUMPS AND DEPRESSIONS. AFTER BACKFILL HAS BEEN COMPLETED, THE CONTRACTOR SHALL AT HIS OWN EXPENSE REPAIR ANY DAMAGE TO THE ROADWAY, INCLUDING ANY DAMAGE CAUSED BY HIS/HER OPERATIONS OF CONSTRUCTION TRAFFIC. ALL EXISTING STRIPING, PAVEMENT MARKINGS, SIGNING AND LOOP DETECTION ALTERED DURING CONSTRUCTION SHALL BE RESTORED TO ORIGINAL CONDITION BY CONTRACTOR BY COMPLETION OF WORK.

11. IT IS THE RESPONSIBILITY OF THE CONTRACTOR PERFORMING WORK ON A CITY STREET TO SUPPLY, INSTALL AND MAINTAIN TRAFFIC CONTROL DEVICES AS SHOWN HEREIN. AS WELL AS ANY SUCH ADDITIONAL TRAFFIC CONTROL DEVICES AS MAY BE REQUIRED. TO ENSURE THE SAFE MOVEMENT OF TRAFFIC, PEDESTRIANS AND BICYCLIST THROUGH OR AROUND THE WORK AREA AND PROVIDE MAXIMUM DETECTION AND SAFETY TO CONSTRUCTION WORKERS.

12. ALL SIGNS, DELINEATORS, BARRICADES, ETC., SHALL CONFORM TO THE LATEST CALTRANS MANUAL FOR TRAFFIC CONTROL THROUGH CONSTRUCTION ZONES.

13. EQUIPMENT, MATERIAL OR DEBRIS SHALL NOT BE STORED IN THE PUBLIC RIGHT-OF-WAY WITHOUT PRIOR APPROVAL BY THE CITY TRAFFIC ENGINEER.

14. IF CONSTRUCTION IS TO BE PERFORMED IN STAGES, ALL WORK SHALL BE COMPLETED IN EACH STAGE PRIOR TO BEGINNING WORK ON THE NEXT STAGE.

15. ALL TRAVEL LANES WILL BE MINIMUM OF 12' WIDE UNLESS APPROVED BY THE CITY TRAFFIC ENGINEER.

16. PEDESTRIAN OR BICYCLIST FLOW WILL NOT BE DISTURBED OR INTERRUPTED UNLESS APPROVED BY THE CITY TRAFFIC ENGINEER.

17. CONSTRUCTION TO TAKE PLACE WITHIN ONLY ONE INTERSECTION AT A TIME.

18. THE CONTRACTOR IS RESPONSIBLE TO INFORM ALL AFFECTED BUSINESSES AND RESIDENTS OF THE WORK. THE CONTRACTOR SHALL DISTRIBUTE PRINTED NOTICES, WHICH INCLUDE DATES AND HOURS OF WORK, TO ALL AFFECTED RESIDENTS AT LEAST ONE WEEK BEFORE STARTING WORK.

19. SIGN PANELS SHALL BE REFLECTORIZED HIGH INTENSITY SURFACES.

20. ALL ADVANCE WARNING SIGN INSTALLATIONS SHALL BE EQUIPPED WITH FLAGS FOR DAYTIME CLOSURES.

22. ALL DIRT, DUST AND DEBRIS SHALL BE REMOVED FROM STREET AT END OF EACH DAY AND AT END OF EACH JOB.

TRAFFIC STRIPING, PAVEMENT MARKINGS AND PAVEMENT MARKERS

1. ALL STRIPING AND INSTALLATION OF ALL PAVEMENT MARKERS AND SIGNS SHALL BE THE RESPONSIBILITY OF THE CONTRACTOR. PAVEMENT MARKERS AND STRIPING SHALL CONFORM TO SECTION 84 AND SECTION 85 OF THE LATEST CALTRANS STANDARD SPECIFICATIONS, AND CALTRANS TRAFFIC CONTROL MANUAL.

2. CONTROL OF ALIGNMENT AND LAYOUT SHALL BE THE RESPONSIBILITY OF THE CONTRACTOR AND IS SUBJECT TO APPROVAL BY THE TRAFFIC ENGINEER.

3. SECTION 84-3.02, "MATERIALS," OF THE CALTRANS STANDARD SPECIFICATIONS, IS AMENDED TO READ:

   PAINT FOR TRAFFIC STRIPES SHALL CONFORM TO THE FOLLOWING STATE SPECIFICATIONS:

ITEM	SPECIFICATION
RAPID DRY WATER-BORNE PAINT WHITE AND YELLOW	8010-42L-30 OR 8101-610-10
GLASS BEADS	8010-51J-22 (TYPE II)

4. COPIES OF STATE SPECIFICATIONS FOR TRAFFIC PAINT AND GLASS BEADS MAY BE OBTAINED FROM THE TRANSPORTATION LABORATORY, P.O. BOX 19128, SACRAMENTO, CA 95819, (916) 739-2400.

5. THINNING OF PAINT WILL NOT BE ALLOWED.

6. THE CONTRACTOR SHALL INSTALL REFLECTORIZED PAVEMENT MARKERS ON ALL LANE LINES AND CENTERLINE STRIPING.

7. CONTRACTOR IS RESPONSIBLE FOR ALL SAND BLASTING OF CONFLICTING STRIPING AND REPLACING ALL STRIPING AND PAVEMENT MARKING REMOVED DUE TO CONSTRUCTION.

8. THE INSTALLATION OF ALL SIGNS WILL BE DONE BY THE CONTRACTOR. ALL SIGNS MUST CONFORM TO THE CALIFORNIA DEPARTMENT OF TRANSPORTATION TRAFFIC MANUAL. ALL SIGN POSTS MUST BE ANCHORED TWO FEET IN CONCRETE AND 18-24 INCHES FROM FACE OF CURB. THE BOTTOM OF SIGNS MUST BE SEVEN (7) FEET FROM THE GROUND. CONTRACTOR SHALL NOTIFY CITY TRAFFIC ENGINEER AT 236-5333 UPON COMPLETION OF STRIPING AND SIGNING.

CONSTRUCTION NOTES FOR TRENCHES THROUGH SIGNALIZED INTERSECTION

1. DAMAGED SIGNAL EQUIPMENT SHALL BE REPAIRED AND/OR REPLACED PER CALTRANS STANDARD SPECIFICATIONS (JULY 1992) DOC.769620 AND CALTRANS STANDARD PLANS (JULY 1992), DOC.769691).

   DETECTOR LOOPS SHALL BE AS FOLLOWS:

BIKE LANE DETECTOR LOOPS	TYPE D
LIMIT LINE DETECTOR LOOPS	TYPE O
INTERMEDIATE AND ADVANCE DETECTOR LOOPS	TYPE B
ALL OTHER DETECTOR LOOPS	TYPE A

2. THE CITY TRAFFIC ENGINEER SHALL BE CONTACTED AT LEAST FIVE WORKDAYS PRIOR TO ANY DISRUPTION OF NORMAL SIGNAL OPERATIONS. CONTACT THE FOLLOWING INDIVIDUAL: CITY OF SAN DIEGO - MR. TOM ELDER - 236-7185.

3. ALL DETECTOR LOOPS, SHALL BE REPLACED AND OPERATIONAL WITHIN FIVE WORKING DAYS FROM INITIAL REMOVAL OR DISRUPTION, IMMEDIATELY AFTER WORK WITHIN THE INTERSECTION IS COMPLETED.

4. CONTRACTOR MUST RECEIVE APPROVAL FROM THE CITY PRIOR TO DETECTOR LOOP INSTALLATION.

LEGEND

- WORK ZONE
- DELINEATOR
- DIRECTION OF TRAVEL
- SIGN
- TYPE III BARRICADES
- TYPE III BARRICADES WITH SIGN PANEL
- PEDESTRIAN ACCESS

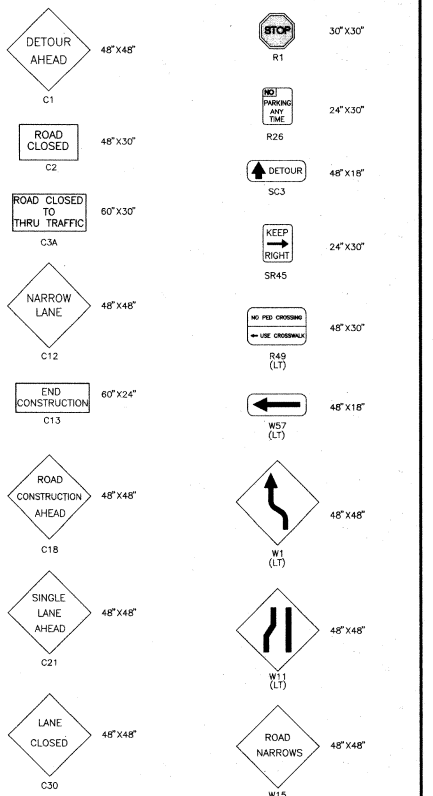

PRIVATE-CONTRACT

PLANS FOR TRAFFIC CONTROL:

NOTES AND LEGEND

SAN DIEGO TRANSIT, IMPERIAL AVE DIVISION - BUS MAINTENANCE FACILITY

CITY OF SAN DIEGO, CALIFORNIA
ENGINEERING DEPARTMENT
SHEET 5 OF 13 SHEETS

W.O. NO 98-267
(037000)

FOR CITY ENGINEER — DATE 4/28/99

DESCRIPTION	BY	APPROVED	DATE	FILMED
ORIGINAL	EARTH TECH			SEP 09 99

1837-6283
CONTROL CERTIFICATION
NAD 83
197-1723
LAMBERT COORDINATES

AS-BUILT

CONTRACTOR C.E. WYLIE — DATE STARTED 5-15-1999
INSPECTOR SEVERINO MENDOZA — DATE COMPLETED 9-24-2000

29557-5-D
DWG NO.

EARTH TECH
9675 BUSINESS PARK AVENUE SUITE 110, SAN DIEGO, CA. 92131
TEL: (858) 536-5610

REGISTERED PROFESSIONAL ENGINEER — STEPHEN D. MOSIER — Exp. 3-31-00 — 42510 — STATE OF CALIFORNIA

	DESIGNED BY	DATE
	SDM	11/5/98
	DRAWN BY	
	LES	11/5/98
	CHECKED BY	
	KAG	11/5/98
	MTDB PRJ. ENG.	
	GPD	11/5/98

MTDB
Metropolitan Transit Development Board
1255 Imperial Avenue, Suite 1000, San Diego, Ca. 92101-7490 (619)231-1466

IMPERIAL AVENUE DIVISION
BUS MAINTENANCE FACILITY

TRAFFIC CONTROL NOTES AND LEGEND

SCALE: NONE

MTDB CONTRACT NO. BUS-443B

DRAWING NO. TC10.1 | SHEET NO. 97

JOB NUMBER 29490 R-R14 FILE NAME: 443B_TC10.1_NOTES.DWG 3/17/99

TRAFFIC CONTROL NOTES:

1. SINGLE ACCESS DRIVEWAY. CONTRACTOR TO COORDINATE CLOSURE WITH PROPERTY OCCUPANT THREE WEEKS IN ADVANCE OF CONSTRUCTION. DRIVEWAY ACCESS TO BE MAINTAINED.
2. TEMPORARY "NO PARKING" AREA. PLACE R26 (NO PARKING) SIGNS AT 25' INTERVALS MAXIMUM ON BOTH SIDES OF STREET, 24 HRS IN ADVANCE OF CONSTRUCTION. COVER CONFLICTING SIGNS AND BAG PARKING METERS.
3. CONES/DELINEATORS SPACED AT 25' INTERVALS MAX (TYP)
4. CONTRACTOR TO MAINTAIN PEDESTRIAN ACCESS AT ALL TIMES.
5. CONTRACTOR TO POST TOW AWAY/NO PARKING SIGNS 48 HOURS IN ADVANCE OF THE APPROVED PROHIBITION.

GENERAL NOTES

1. TRAFFIC CONTROL DESIGN SPEED IS 25 MPH.
2. WHEN ADVANCE WARNING SIGNS PROGRESS INTO ADDITIONAL BLOCKS, C18 (ROAD CONSTRUCTION AHEAD) AND C13 (END OF CONSTRUCTION) SIGNS ON CROSS STREETS SHALL BE LOCATED 50' FROM THE INTERSECTION (BCR), UNLESS NOTED OTHERWISE.

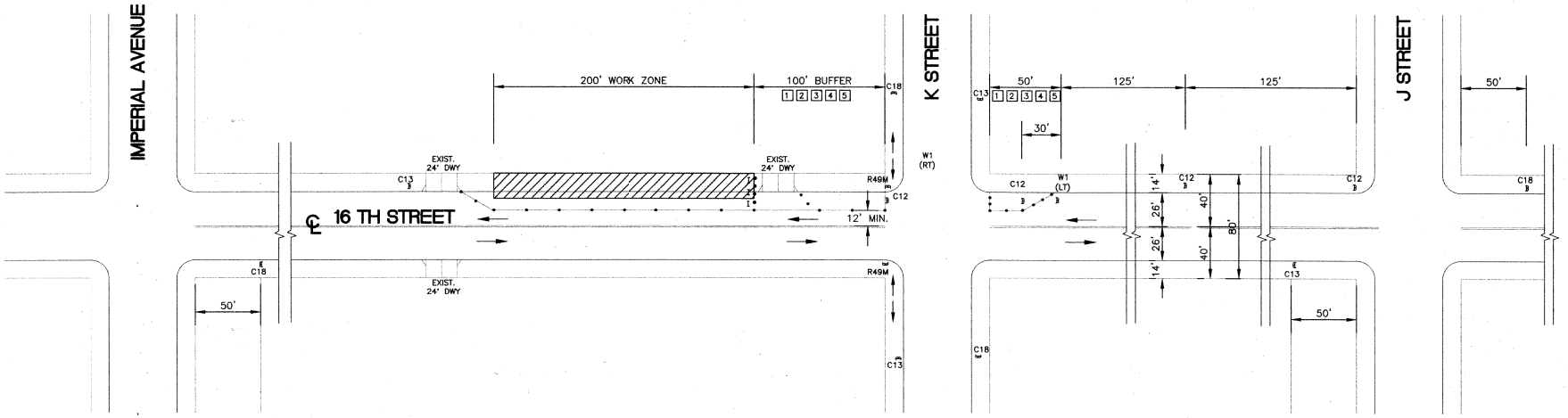

16 TH STREET
SCALE: "=40'

NORTH

PRIVATE-CONTRACT
PLANS FOR TRAFFIC CONTROL:
16 TH STREET
SAN DIEGO TRANSIT, IMPERIAL AVE DIVISION – BUS MAINTENANCE FACILITY

CITY OF SAN DIEGO, CALIFORNIA
ENGINEERING DEPARTMENT
SHEET 6 OF 13 SHEETS

W.O. NO 98-267 (037000)

FOR CITY ENGINEER — DATE 4/28/99

DESCRIPTION	BY	APPROVED	DATE	FILMED
ORIGINAL	EARTH TECH			SEP 08 99

1837-6283
CONTROL CERTIFICATION
NAD 83
197-1723
LAMBERT COORDINATES

AS-BLT. C.E.
CONTRACTOR C.E. WYLIE — DATE STARTED 5-15-1999
INSPECTOR SEVERINO MENDOZA — DATE COMPLETED 9-26-2000

29557-6-D
DWG NO.

JOB NUMBER 24990 R-R14 FILE NAME: 4438_TC-2.DWG 3/17/99

EARTH TECH
9675 BUSINESS PARK AVENUE SUITE 110, SAN DIEGO, CA. 92131
TEL: (619) 536-5610

REGISTERED PROFESSIONAL ENGINEER STEPHEN D. MOBBLE Exp. 3-31-01 #2350 STATE OF CALIFORNIA

	DATE
DESIGNED BY SDM	11/5/98
DRAWN BY LES	11/5/98
CHECKED BY KAG	11/5/98
MTDB PRJ. ENG. GPD	11/5/98

MTDB
Metropolitan Transit Development Board
1255 Imperial Avenue, Suite 1000, San Diego, Ca. 92101-7490 (619)231-1466

IMPERIAL AVENUE DIVISION
BUS MAINTENANCE FACILITY

TRAFFIC CONTROL
16 TH STREET

SCALE 1'=40'
MTDB CONTRACT NO. BUS-443B
DRAWING NO. TC10.2
SHEET NO. 98

FOR REDUCED PLANS ORIGINAL SCALE IS IN INCHES 0 1 2 3

AS-BUILT

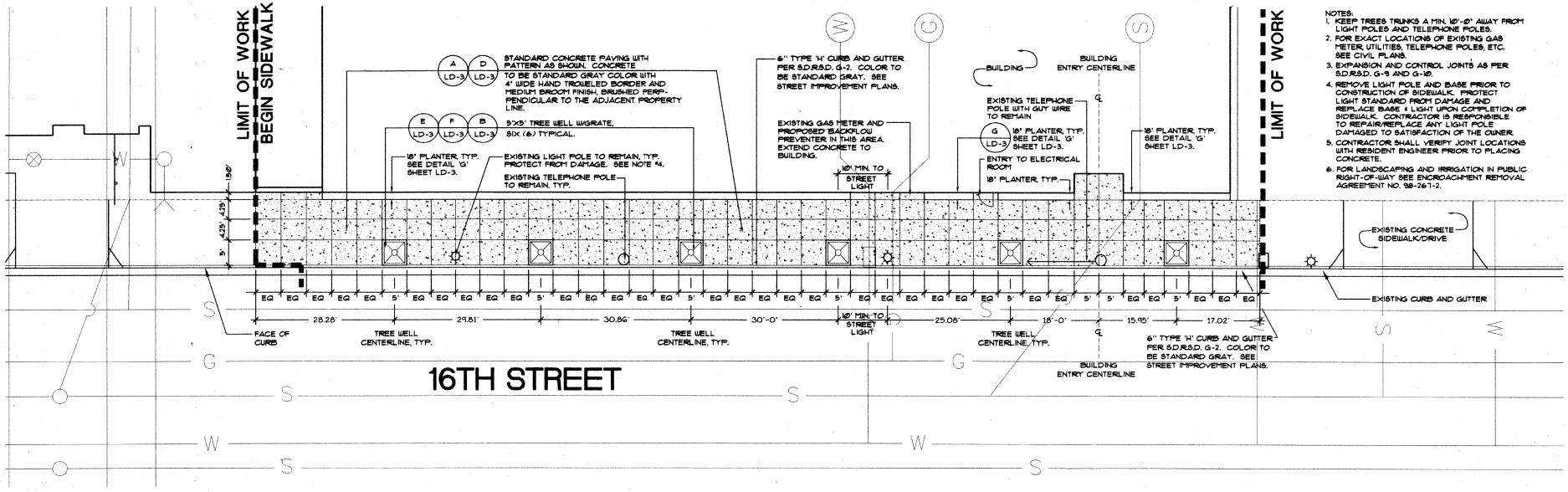

NOTES:
1. KEEP TREES TRUNKS A MIN. 10'-0" AWAY FROM LIGHT POLES AND TELEPHONE POLES.
2. FOR EXACT LOCATIONS OF EXISTING GAS METER, UTILITIES, TELEPHONE POLES, ETC. SEE CIVIL PLANS.
3. EXPANSION AND CONTROL JOINTS AS PER S.D.R.S.D. G-9 AND G-10.
4. REMOVE LIGHT POLE AND BASE PRIOR TO CONSTRUCTION OF SIDEWALK. PROTECT LIGHT STANDARD FROM DAMAGE AND REPLACE BASE & LIGHT UPON COMPLETION OF SIDEWALK. CONTRACTOR IS RESPONSIBLE TO REPAIR/REPLACE ANY LIGHT POLE DAMAGED TO SATISFACTION OF THE OWNER.
5. CONTRACTOR SHALL VERIFY JOINT LOCATIONS WITH RESIDENT ENGINEER PRIOR TO PLACING CONCRETE.
6. FOR LANDSCAPING AND IRRIGATION IN PUBLIC RIGHT-OF-WAY SEE ENCROACHMENT REMOVAL AGREEMENT NO. 98-261-2.

NOTE:
SEE DWG. LD-3 FOR DETAILS. SEE SPECIFICATIONS AND SPECIAL PROVISIONS FOR ADDITIONAL INFORMATION AND REQUIREMENTS.

SCALE: 1"=10'-0"

PRIVATE CONTRACT

IMPROVEMENT PLAN FOR:
16 TH STREET
SAN DIEGO TRANSIT, IMPERIAL AVE DIVISION – BUS MAINTENANCE FACILITY

CITY OF SAN DIEGO, CALIFORNIA
ENGINEERING DEPARTMENT
SHEET 7 OF 13 SHEETS

W.O. NO. 98-267 (037000)

FOR CITY ENGINEER — DATE 4/28/99

DESCRIPTION	BY	APPROVED	DATE	FILED
ORIGINAL	ELF			SEP 10 99

1837-6283 NAD 83 COORDINATES
197-1723 LAMBERT COORDINATES

AS-BLT. C.E.
CONTRACTOR C.E. WYLLIE DATE STARTED 5-15-1999
INSPECTOR SILVERIO MENDEZ DATE COMPLETED 9-26-2000
29557-7-D DWG. NO.

EARTH TECH
9675 BUSINESS PARK AVENUE SUITE 110, SAN DIEGO, CA. 92131
TEL: (858) 536-5610

Estrada Land Planning
85 Horton Place, Suite 300 (mailing)
750 Broadway Circle, Suite 300 (shipping)
San Diego, California 92101
(619)239-1040 fax 239-0105(FAX)
stevee@estradaplan.com

REGISTERED LANDSCAPE ARCHITECT
STEVE ESTRADA
No. 1585
SIGNATURE
4-21-99
DATE
STATE OF CALIFORNIA

DESIGNED BY TRS	DATE 4/20/99
DRAWN BY TRS	4/20/99
CHECKED BY SM	4/20/99
MTDB PRJ. ENG.	

MTDB
Metropolitan Transit Development Board
1255 Imperial Avenue, Suite 1000, San Diego, Ca. 92101-7490 (619)231-1466

IMPERIAL AVENUE DIVISION
BUS MAINTENANCE FACILITY
LANDSCAPE CONSTRUCTION PLAN

SCALE 1"=10'-0"
MTDB CONTRACT NO. BUS-443B
DRAWING NO. LD-1 | SHEET NO. 99

IMPERIAL AVENUE DIVISION BUS MAINTENANCE FACILITY

JOB NUMBER 339-06 R-14 FILE NAME: MAIN/PROJECTS/33906/33906_LY.DWG 4/20/99

AS-BUILT

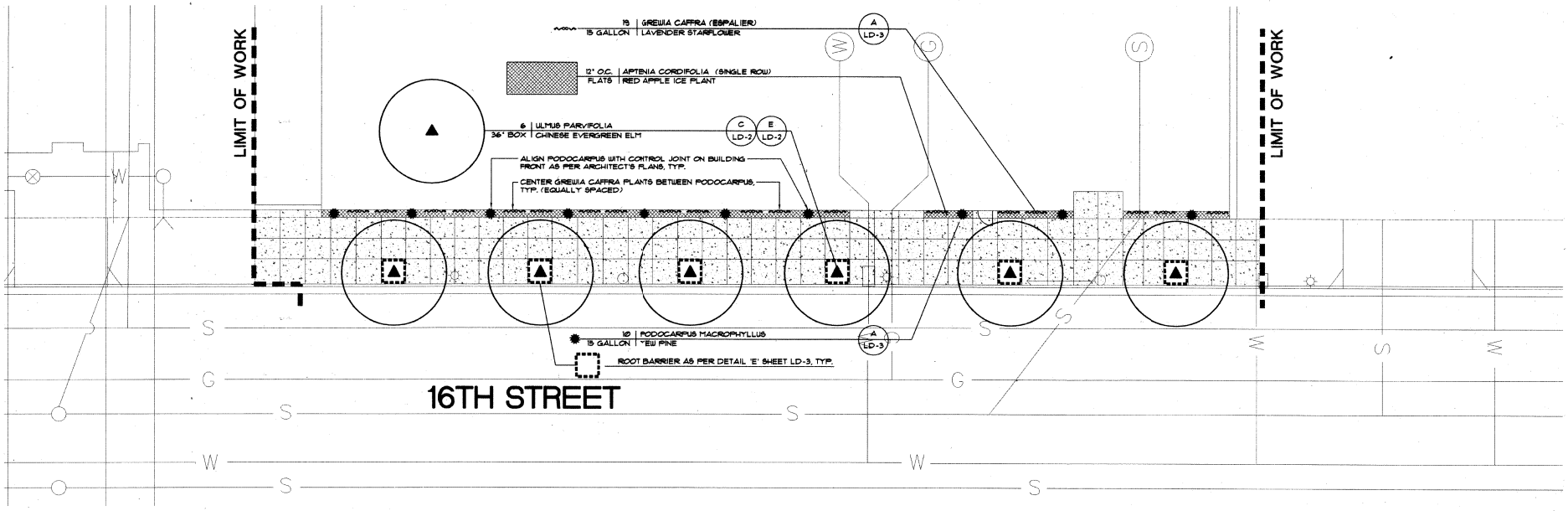

NOTE:
SEE SHEETS LD-3 AND LD-4 FOR PLANTING DETAILS, LEGEND AND NOTES.

IMPERIAL AVENUE DIVISION BUS MAINTENANCE FACILITY

PRIVATE CONTRACT

PLANTING PLAN FOR:

16 TH STREET

SAN DIEGO TRANSIT, IMPERIAL AVE DIVISION – BUS MAINTENANCE FACILITY

CITY OF SAN DIEGO, CALIFORNIA
ENGINEERING DEPARTMENT
SHEET 8 OF 13 SHEETS

W.O. NO. 98-267 (037000)

FOR CITY ENGINEER — DATE 4/28/99

DESCRIPTION	BY	APPROVED	DATE	FILMED
ORIGINAL	ELP			SEP 09 99
AS-BLT.	C.E.			

1837-6283 RAS BS COORDINATES

197-1723 LAMBERT COORDINATES

CONTRACTOR C.E. WYLIE DATE STARTED 5-15-1999
INSPECTOR SEVERINO MENDOZA DATE COMPLETED 9-26-2000

29557-8-D DWG NO.

0 10 20 30
SCALE: 1"=10'-0"

EARTH TECH
9675 BUSINESS PARK AVENUE SUITE 110, SAN DIEGO, CA. 92131
TEL: (619) 536-5610

Estrada Land Planning
Urban Design Landscape Architecture Computer Graphics
85 Horton Plaza, Suite 300 (mailing)
755 Broadway Circle, Suite 300 (shipping)
San Diego, California 92101
619.236.7443 fax: 619.236.0578
elpinvestradaland@aol.com

REGISTERED LANDSCAPE ARCHITECT
STEVE ESTRADA
No. 1685
SIGNATURE
DATE 4-20-99
STATE OF CALIFORNIA

		DATE
DESIGNED BY	TRS	4/20/99
DRAWN BY	TRS	4/20/99
CHECKED BY	SM	4/20/99
MTDB PRJ. ENG.		

MTDB
Metropolitan Transit Development Board
1255 Imperial Avenue, Suite 1000, San Diego, Ca. 92101-7490 (619)231-1466

IMPERIAL AVENUE DIVISION
BUS MAINTENANCE FACILITY

LANDSCAPE PLANTING PLAN

SCALE 1"=10'-0"

MTDB CONTRACT NO. BUS-443B

DRAWING NO. LD-2 | SHEET NO. 100

JOB NUMBER 339-08 R-14 FILE NAME: MAIN/PROJECTS/33906/33906_PT.DWG 4/20/99

AS-BUILT

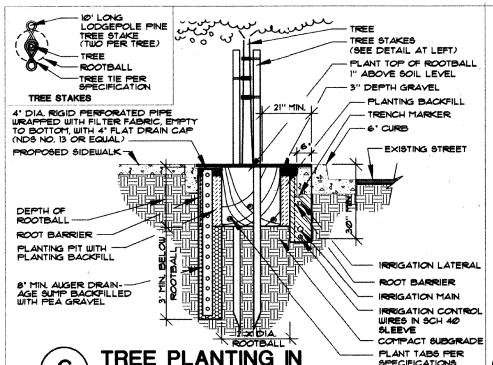

C **TREE PLANTING IN TREE GRATE** SCALE: N.T.S.

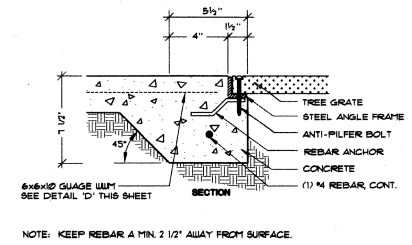

NOTE: KEEP REBAR A MIN. 2 1/2" AWAY FROM SURFACE.

B **TREE GRATE ATTACHMENT** SCALE: N.T.S.

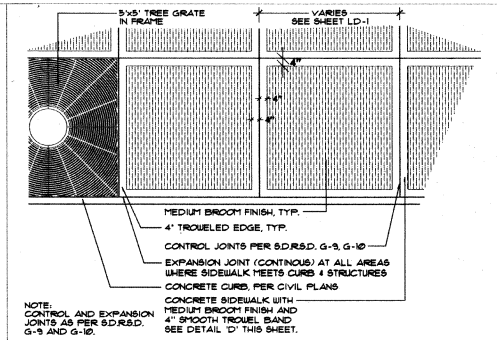

NOTE: CONTROL AND EXPANSION JOINTS AS PER S.D.R.S.D. G-9 AND G-10.

A **CONCRETE WALK DETAIL** SCALE: N.T.S.

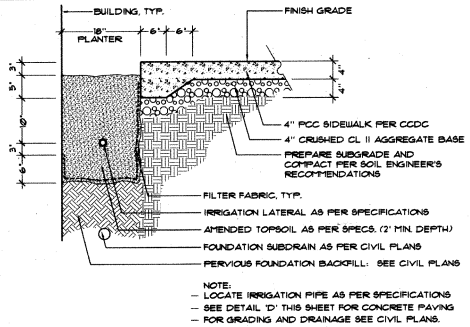

NOTE:
- LOCATE IRRIGATION PIPE AS PER SPECIFICATIONS
- SEE DETAIL 'D' THIS SHEET FOR CONCRETE PAVING
- FOR GRADING AND DRAINAGE SEE CIVIL PLANS.

G **18" PLANTER SECTION** SCALE: N.T.S.

NOTES:
- SEE TREE GRATE NOTES, THIS SHEET.
- INSTALL AS PER DETAILS "B" AND "E", THIS SHEET.

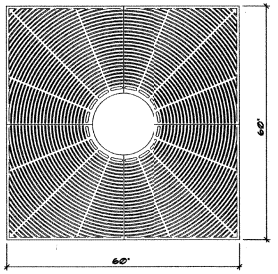

F **OLYMPIAN PATTERN** TREE GRATE SCALE: N.T.S.

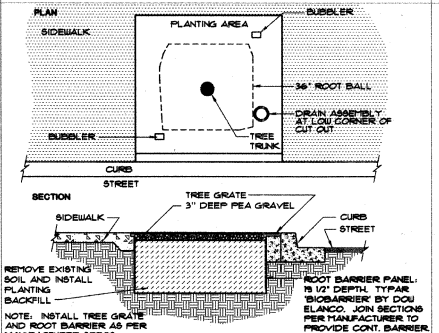

NOTE: INSTALL TREE GRATE AND ROOT BARRIER AS PER MANUFACTURER SPECS.

E **TREE GRATE INSTALLATION** NOT TO SCALE SCALE: N.T.S.

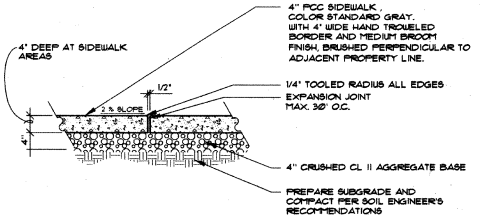

NOTE:
- LOCATE 2' DEEP x 1/4" RAD. SCORE CONTROL JOINTS AS INDICATED ON PLANS
- ALL SIDEWALK AREAS TO BE MIN. 4' DEEP CONCRETE
- SEE CCDC STREETSCAPE MANUAL (TYP.)
- SEE DETAIL 'A' THIS SHEET.
- FOR GRADING SEE CIVIL PLANS.

D **CONCRETE PAVING** (NON-VEHICULAR) SCALE: N.T.S.

IMPERIAL AVENUE DIVISION BUS MAINTENANCE FACILITY

PRIVATE CONTRACT
PAVING/PLANTING/CONSTRUCTION DETAILS FOR:
16 TH STREET
SAN DIEGO TRANSIT, IMPERIAL AVE DIVISION – BUS MAINTENANCE FACILITY
CITY OF SAN DIEGO, CALIFORNIA
ENGINEERING DEPARTMENT
SHEET 9 OF 13 SHEETS
W.O. NO. 98-267 (637000)
FOR CITY ENGINEER — DATE 4/28/99

DESCRIPTION	BY	APPROVED	DATE	FILMED
ORIGINAL	ELP			

1837-6283 NAD 83 COORDINATES
197-1723 LAMBERT COORDINATES
AS-BLT C.E.
CONTRACTOR C.E. WYLIE DATE STARTED 5-15-1999
INSPECTOR SEVERIANO MENDOZA DATE COMPLETED 9-24-2000
29557-9-D DWG NO.

EARTH TECH
9675 BUSINESS PARK AVENUE SUITE 110, SAN DIEGO, CA 92131
TEL: (858) 536-5610

Estrada Land Planning
Urban Design Landscape Architecture Computer Imaging
85 Horton Plaza, Suite 300 (mailing) 750 Broadway Circle, Suite 300 (shipping) San Diego, CA 92101
(619)239-0320 fax (619)239-0578
dpearl@estradaplan.com

REGISTERED LANDSCAPE ARCHITECT STEVE ESTRADA No. 1680 Exp. 8-31-99 STATE OF CALIFORNIA

DESIGNED BY	DATE
TRS	4/20/99
DRAWN BY	
TRS	4/20/99
CHECKED BY	
SM	4/20/99
MTDB PRJ. ENG.	

MTDB
Metropolitan Transit Development Board
1255 Imperial Avenue, Suite 1000, San Diego, Ca. 92101-7490 (619)231-1466

IMPERIAL AVENUE DIVISION BUS MAINTENANCE

LANDSCAPE CONSTRUCTION DETAILS AND PLANTING LEGEND, DETAILS AND NOTES

SCALE NTS
MTDB CONTRACT NO. BUS-443B
DRAWING NO. LD-3
SHEET NO. 101

JOB NUMBER 339-06 R-12 FILE NAME: MAIN/PROJECTS/33906/33906_PD.DWG 4/20/99

AS-BUILT

TREE LEGEND

BOTANICAL NAME	COMMON NAME	SIZE	COMMENTS	HT. X SP.	DETAIL
ULMUS PARVIFOLIA	CHINESE EVERGREEN ELM	36" BOX	STANDARD FORM, HEALTHY, DENSE, VIGOROUS 6' MIN. BRANCHING HEIGHT	14' x 6' x 3" MINIMUM CALIPER	C / LD-3 E / LD-3

GROUNDCOVER LEGEND

SYMBOL	BOTANICAL NAME	COMMON NAME	SPACING	SIZE	COMMENTS	DETAIL
	APTENIA CORDIFOLIA	RED APPLE ICE PLANT	12" O.C., SINGLE ROW	FLATS	VIGOROUS	

ESPALIER LEGEND

SYMBOL	BOTANICAL NAME	COMMON NAME	SIZE	COMMENTS	DETAIL
	PODOCARPUS MACROPHYLLUS	YEW PINE	15 GAL	COLUMNAR FORM, 6' HT. x 18" DIAMETER FULL & DENSE	A / LD-4
	GREWIA CAFFRA	LAVENDER STARFLOWER	15 GAL	ESPALIER, 5' HEIGHT x 6' SPREAD FULL & DENSE	A / LD-4

PLANTING NOTES

1. ALL LANDSCAPING SHALL BE DONE IN ACCORDANCE WITH THE GENERAL, SPECIAL, AND TECHNICAL PROVISIONS, AND THE APPLICABLE PARTS OF THE STANDARD SPECIFICATIONS FOR PUBLIC WORKS CONSTRUCTION, AS WELL AS THE FOLLOWING:
2. THE PLANTING PLANS ARE DIAGRAMMATIC. MINOR ADJUSTMENTS IN PLANT LOCATIONS, ORIENTATION, AND TYPE MAY BE MADE AT THE DISCRETION OF THE ENGINEER.
3. THE CONTRACTOR SHALL COORDINATE HIS WORK WITH THE OTHER TRADES AND MAINTAIN POSITIVE DRAINAGE DURING CONSTRUCTION.
4. DO NOT DAMAGE ROOTBALL AND/OR FOLIAGE OF PLANTS DURING TRANSPORTATION OR PLANT INSTALLATION.
5. ALL PLANT MATERIAL SHALL BE SUBJECT TO APPROVAL BY THE ENGINEER AND REPLACED UPON REQUEST BEFORE OR AFTER PLANTING.
6. THE ENGINEER SHALL APPROVE FINAL PLACEMENT AND ORIENTATION OF ALL TREES AND SHRUBS PRIOR TO PLANTING.
7. ALL PLANTS PLANTED FROM CONTAINERS SHALL HAVE THEIR ROOTBALLS SCORED WITH A SHARP TOOL TO A DEPTH OF ONE INCH (1") IN THREE LONGITUDINAL INCISIONS AT LOCATIONS EQUALLY SPACED AROUND THE ROOTBALL BEFORE PLACING PLANT IN HOLE.
8. INSTALL 3" LAYER OF PEA GRAVEL THROUGHOUT ENTIRE SURFACE OF TREE PLANTING AREAS UNDER TREE GRATE, TYPICAL.
9. ALL TREES TO BE INSTALLED WITH ROOT BARRIER AS PER DETAIL "B" THIS SHEET.

TREE GRATE

TREE GRATE SHALL BE LOCATED AS SHOWN ON PLAN. INSTALL PER S.D.R.S.D. AND DETAIL "B" IN THIS SHEET WITH FRAME EMBEDDED IN CONCRETE EDGE. SEE SPECIAL PROVISIONS FOR ADDITIONAL REQUIREMENTS.

PRODUCT: IRONSMITH - OLYMPIAN M60068, 60" X 60" SQUARE (2-PIECE) GRATE ½" SLOTS, WITH 12" TREE OPENING, AND ONE PIECE STEEL FRAME UNIT.

FINISH: FACTORY APPLIED FINISH, CONSISTING OF ONE COAT PRIMER AND ONE TOP COAT BLACK ENAMEL.

HARDWARE: GALVANIZED, ANTI-PILFER HARDWARE. PAINT EXPOSED HARDWARE TO MATCH GRATE.

MANUFACTURER: IRONSMITH
41631 CORPORATE WAY, SUITE 3
PALM DESERT, CA 92260 OR APPROVED EQUAL
(800) 338-4766

NOTE:
- TREE GRATE METAL FRAMING TO HAVE NO ANCHORS ALONG SIDE TOUCHING CURBING. CONTRACTOR TO SPECIFY THIS INFORMATION TO MANUFACTURER PRIOR TO ORDERING. INSTALL REMAINING THREE (3) SIDES AS PER ALL MANUFACTURER'S SPECIFICATIONS AND INSTRUCTIONS AND AS NOTED ABOVE.
- PER CCDC STREETSCAPE MANUAL (TYP.)
- SEE DETAILS "B", "E" AND "F", SHEET LD-3.

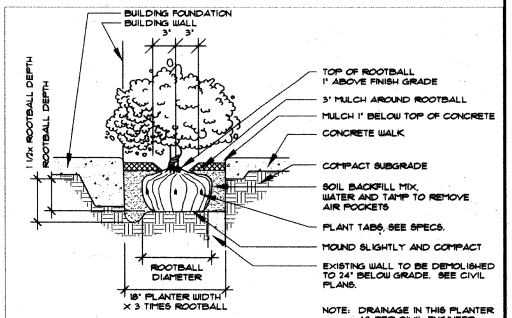

A SHRUB PLANTING
SCALE: N.T.S.

IMPERIAL AVENUE DIVISION BUS MAINTENANCE FACILITY

PRIVATE CONTRACT
PLANTING DETAILS AND NOTES FOR:
16 TH STREET
SAN DIEGO TRANSIT, IMPERIAL AVE DIVISION - BUS MAINTENANCE FACILITY

CITY OF SAN DIEGO, CALIFORNIA
ENGINEERING DEPARTMENT
SHEET 10 OF 13 SHEETS

W.O. NO. 98-267 (037000)

FOR CITY ENGINEER — DATE 4/25/99

DESCRIPTION	BY	APPROVED	DATE	FILMED
ORIGINAL	ELP			SEP 09 99

1837-6283 MAD 83 COORDINATES

197-1723 LAMBERT COORDINATES

AS-BLT C.E. — CONTRACTOR C.E. WYLIE DATE STARTED 5-15-1999
INSPECTOR SEVERINO MENDOZA DATE COMPLETED 9-16-2000

ENG. NO. 29557-10-D

EARTH TECH
9675 BUSINESS PARK AVENUE SUITE 110, SAN DIEGO, CA. 92131
TEL: (858) 536-5810

Estrada Land Planning
80 Iris on Plaza, Suite 100 (mailing)
San Diego, California 92154
(619)2985043 fax: (619)2985078
stevest@adelphia.com

REGISTERED LANDSCAPE ARCHITECT — STEVE ESTRADA No. 1686 — SIGNATURE 4-20-99 DATE — STATE OF CALIFORNIA

DESIGNED BY TRS	DATE 4/20/99
DRAWN BY TRS	4/20/99
CHECKED BY SM	4/20/99
MTDB PRJ. ENG.	

MTDB
Metropolitan Transit Development Board
1255 Imperial Avenue, Suite 1000, San Diego, Ca. 92101-7490 (619)231-1466

IMPERIAL AVENUE DIVISION BUS MAINTENANCE

LANDSCAPE PLANTING DETAILS AND NOTES

SCALE: NTS
MTDB CONTRACT NO. BUS-443B
DRAWING NO. LD-4
SHEET NO. 102

JOB NUMBER 339-06 R-12 FILE NAME: M:\MA\PROJECTS\33906\33906_PD.DWG 4/20/99

AS-BUILT

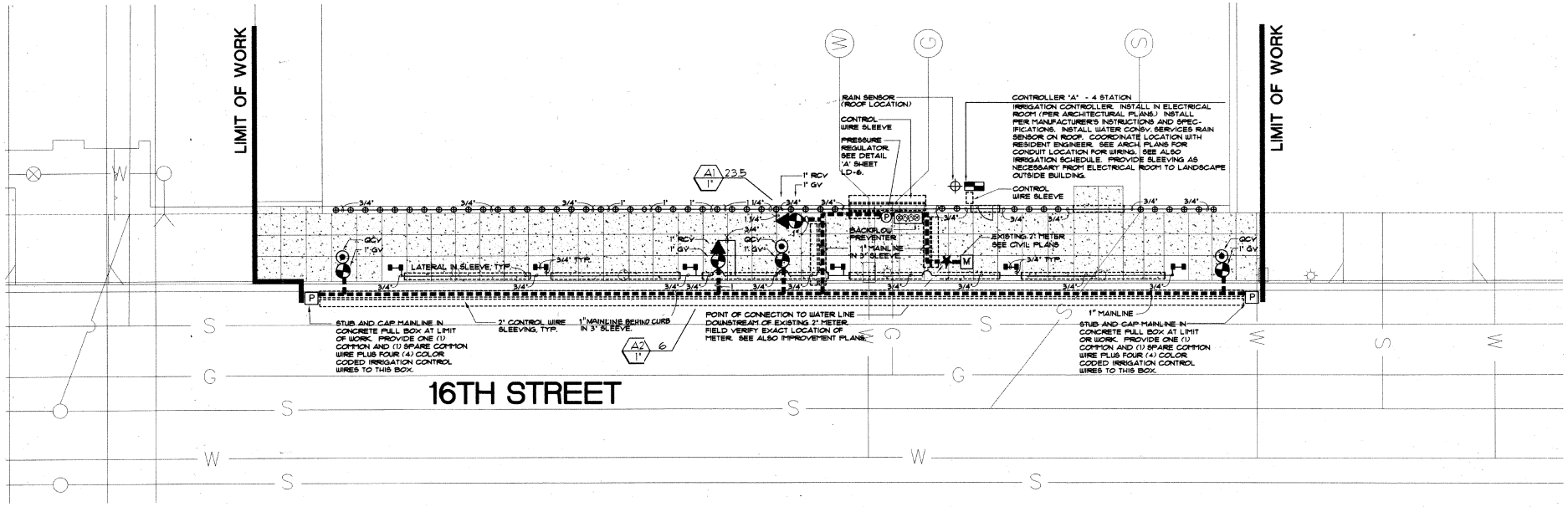

TYPICAL IRRIGATION EQUIPMENT LOCATION

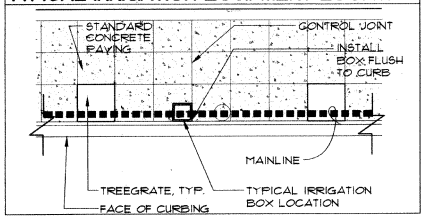

POINT OF CONNECTION AT STA. 12+25, 16TH STREET	
P.O.C. DESIGNATION	"A1" ★ (SEE PLANS)
ELEVATION	29.63
STATIC PRESSURE	104 PSI
WATER METER (EXISTING) 2" AT	STA. 12+25, 16th STREET
BACK FLOW	1"
PEAK FLOW	23.5 GPM
CONTROLLER TYPE	RAINBIRD ESP-4
STATIONS AVAILABLE	2
STATIONS USED	2
WATER AGENCY	CITY OF SAN DIEGO
WATER UTILITIES DEPT.	619-533-4100

TYPICAL QUICK COUPLER VALVE CONNECTION

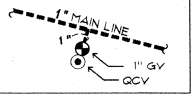

NOTES:
1. BACKFLOW PREVENTER, VALVES, QUICK COUPLERS, ETC. TO BE INSTALLED IN SIDEWALK AREA OUT OF STREET. INSTALL VALVES AND BACKFLOW PREVENTER IN CONCRETE SIDEWALK AREA AS PER DETAILS. SEE TABLE THIS SHEET FOR FURTHER INFORMATION. PROVIDE SLEEVING AS NECESSARY.
2. FOR LANDSCAPING AND IRRIGATION IN PUBLIC RIGHT-OF-WAY SEE ENCROACHMENT REMOVAL AGREEMENT NO. 98-261-2.

NOTE:
SEE SHEETS LD-6 AND LD-7 FOR IRRIGATION DETAILS, LEGEND AND NOTES.

0 10 20 30
SCALE: 1"=10'-0"

PRIVATE CONTRACT
IRRIGATION PLAN FOR:
16 TH STREET
SAN DIEGO TRANSIT, IMPERIAL AVE DIVISION – BUS MAINTENANCE FACILITY
CITY OF SAN DIEGO, CALIFORNIA
ENGINEERING DEPARTMENT
SHEET 11 OF 13 SHEETS
W.O. NO. 98-267 (037000)
FOR CITY ENGINEER — DATE 4/28/99

DESCRIPTION	BY	APPROVED	DATE	FILMED
ORIGINAL	ELP			SEP 29 99
AS-BLT	C.E.			

1837-6283 BASE BM COORDINATES
197-1723 LAMBERT COORDINATES
CONTRACTOR C.E. WYLIE DATE STARTED 5-15-1999
INSPECTOR SEVERINO MENDOZA DATE COMPLETED 9-16-2000
29557-11-D DWG NO.

IMPERIAL AVENUE DIVISION BUS MAINTENANCE FACILITY

EARTH TECH
9675 BUSINESS PARK AVENUE SUITE 110, SAN DIEGO, CA. 92131
TEL: (858) 536-5610

Estrada Land Planning
Urban Design Landscape Architecture Computer Graphics
95 Horton Plaza, Suite 300 (mailing)
1734 Broadway Circle, Suite 300 (shipping)
San Diego, CA 92101
(619)235-1043 fax: (619)235-0578
stevest-sd@cox.com

REGISTERED LANDSCAPE ARCHITECT — STEVE ESTRADA No. 1685 Exp. 4/30/00 — SIGNATURE — DATE 4-22-99 — STATE OF CALIFORNIA

DESIGNED BY TRS	DATE 4/20/99
DRAWN BY TRS	4/20/99
CHECKED BY SM	4/20/99
MTDB PRJ. ENG.	

MTDB
Metropolitan Transit Development Board
1255 Imperial Avenue, Suite 1000, San Diego, Ca. 92101-7490 (619)231-1466

IMPERIAL AVENUE DIVISION BUS MAINTENANCE FACILITY
LANDSCAPE IRRIGATION PLAN

SCALE 1"=10'-0"
MTDB CONTRACT NO. BUS-443B
DRAWING NO. LD-5
SHEET NO. 103

AS-BUILT

JOB NUMBER 339-06 R-14 FILE NAME: MAIN/PROJECTS/33906/33906_IR.DWG 4/20/99

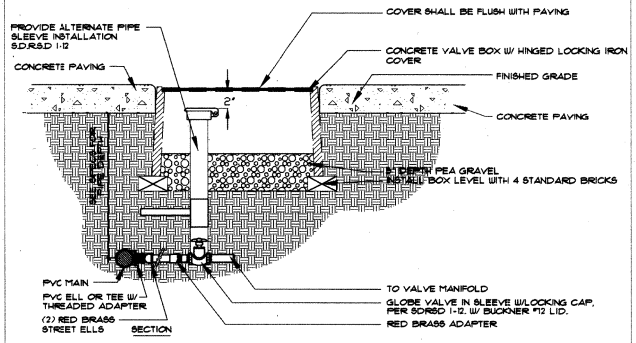

B GLOBE VALVE NOT TO SCALE (LOCATED IN PAVING AREAS)

NOTES:
1. ALL RISERS, UNIONS, ELBOWS AND NIPPLES SHALL BE COPPER.
2. CLOSE NIPPLES SHALL NOT BE USED.
3. TEFLON TAPE 3/4" WIDE SHALL BE USED ON ALL THREADED CONNECTIONS.
4. CONCRETE PAD SHALL BE 18" WIDE, MINIMUM.
5. BACKFLOW PREVENTER ASSEMBLY SHALL BE TESTED UPON INSTALLATION BY A CERTIFIED BACKFLOW DEVICE TESTER. CONTRACTOR SHALL PROVIDE THE ENGINEER WITH WRITTEN TEST RESULTS COMPLETED BY CERTIFIED BACKFLOW TESTER PRIOR TO THE BACKFLOW PREVENTER ASSEMBLY'S ACCEPTANCE BY THE ENGINEER.

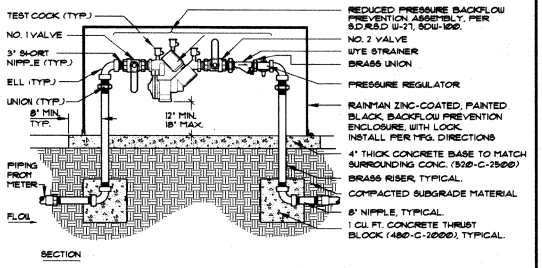

A BACKFLOW PREVENTER ASSEMBLY NOT TO SCALE

NOTE:
INSTALL TWO (2) BUBBLER HEAD ASSEMBLIES AT EACH TREE WELL LOCATION. LOCATE AT OPPOSITE CORNERS OF TREE WELL, TYPICAL.

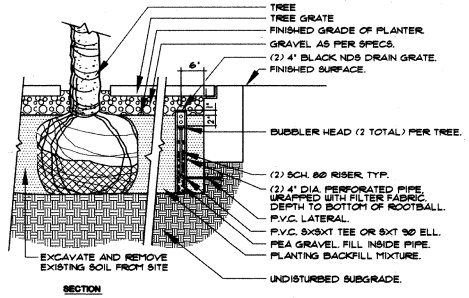

D BUBBLER HEADS AT TREE WELL NOT TO SCALE

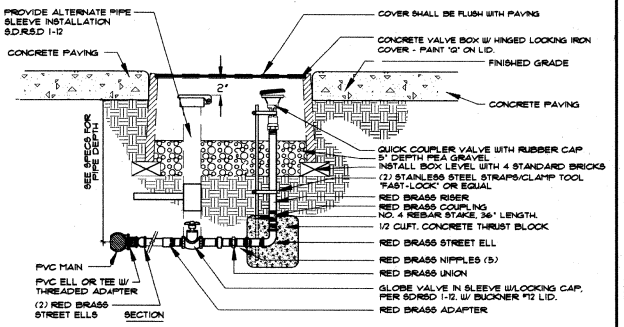

C QUICK COUPLER VALVE WITH GLOBE VALVE NOT TO SCALE (LOCATED IN PAVING AREAS)

IMPERIAL AVENUE DIVISION BUS MAINTENANCE FACILITY

PRIVATE CONTRACT

IRRIGATION DETAILS FOR:

16 TH STREET

SAN DIEGO TRANSIT, IMPERIAL AVE DIVISION – BUS MAINTENANCE FACILITY

CITY OF SAN DIEGO, CALIFORNIA
ENGINEERING DEPARTMENT
SHEET 12 OF 13 SHEETS

W.O. NO. 98-267 (037000)

FOR CITY ENGINEER — DATE 4/28/99

DESCRIPTION	BY	APPROVED	DATE	FILMED
ORIGINAL	ELP			SEP 30 99

1837-6283 NAD 83 COORDINATES

197-1723 LAMBERT COORDINATES

AS-BLT C.E.

CONTRACTOR C.E. WYLIE DATE STARTED 6-16-1999
INSPECTOR SEVERINO MESQUEZ DATE COMPLETED 2-24-2000

29557-12-D DWG NO.

EARTH TECH
9675 BUSINESS PARK AVENUE, SUITE 110, SAN DIEGO, CA. 92131
TEL: (858) 536-5610

Estrada Land Planning
85 Horton Plaza, Suite 300 (mailing)
750 Broadway Circle, Suite 300 (shipping)
San Diego, California 92101
(619)239-1060 Fax: 619.239.0573

REGISTERED LANDSCAPE ARCHITECT
STEVE ESTRADA
No. 1895
SIGNATURE
4-20-99
DATE
STATE OF CALIFORNIA

DESIGNED BY	TRS	4/20/99
DRAWN BY	TRS	4/20/99
CHECKED BY	SM	4/20/99
MTDB PRJ. ENG.		

MTDB
Metropolitan Transit Development Board
1255 Imperial Avenue, Suite 1000, San Diego, Ca. 92101-7490 (619)231-1466

IMPERIAL AVENUE DIVISION BUS MAINTENANCE FACILITY

LANDSCAPE IRRIGATION DETAILS

SCALE NTS

MTDB CONTRACT NO. BUS-443B

DRAWING NO. LD-6 | SHEET NO. 104

JOB NUMBER 339-06 R-14 FILE NAME: MAIN/PROJECTS/33906/33906_ID.DWG 4/20/99

AS-BUILT

IRRIGATION LEGEND

SYMBOL	IRRIGATION COMPONENT DESCRIPTION	MFG.	MODEL/ PART NO.	REMARKS	DETAIL REF.
★	POINT OF CONNECTION TO WATER MAIN	-	-	AT METER LOCATION, VERIFY IN FIELD	S.D.R.S.D. W-1
M	2" WATER METER	(EXISTING)	-	SEE CIVIL PLANS FOR LOCATION	S.D.R.S.D. W-1, W-5, & SDW 112
	REDUCED PRESSURE BACKFLOW PREVENTER	FEBCO	825Y (1")	INSTALL PER CITY OF SAN DIEGO REQUIREMENTS	DETAIL A /LD-6
	BACKFLOW PREVENTER ENCLOSURE	RAINMAN	RMBF-30CR	PROVIDE AND INSTALL ZINC COATED BLACK-PAINTED ENCLOSURE WITH NO SHARP EDGES. VERIFY SIZE.	DETAIL A /LD-6
C	IRRIGATION CONTROLLER	RAINBIRD	ESP-4	WALL MOUNT IN EQUIPMENT ROOM, DIRECT WIRE W/ DISCONNECT SWITCH	S.D.R.S.D. I-18
	'RAIN GUARD' RAIN SENSOR IN VANDAL RESISTANT ENCLOSURE	WATER CONSV. SERVICES	WCS RGVR	INSTALL RAIN SENSOR ON ROOF OF BUILDING. INSTALL PER MANUFACTURER INSTRUCTIONS AND SPECIFICATIONS. INSTALL IN AREA FREE AND CLEAR OF OVERHEAD OBSTRUCTIONS. SEE ARCHITECTS PLANS FOR LOCATION OF CONDUIT FOR WIRE CONNECTION.	---
P	PRESSURE REGULATOR	WILKINS	MODEL 500	1" SIZE. INSTALL IN BACKFLOW ENCLOSURE AS PER DETAIL 'A', LD-6.	DETAIL A /LD-6
-	WYE STRAINER	WILKINS	500Y3BBR	1" INSTALL ON BACKFLOW PREVENTER ASSEMBLY	DETAIL A /LD-6
	GLOBE VALVE	WILKINS	215	INSTALL IN CONCRETE VALVE BOX SIZE PER PLAN.	DETAIL B /LD-6
▼	ELECTRIC REMOTE CONTROL VALVE	RAINBIRD	100-EFB	INSTALL IN CONCRETE VALVE BOX SIZE PER PLAN. INSTALL IN CONCRETE PAVING. SEE DETAIL S.D.R.S.D. I-14.	S.D.R.S.D. I-14
■	PRESSURE COMPENSATING FULL-CIRCLE BUBBLERS	RAINBIRD	1402	.50 GPM. INSTALL TWO PER TREE	DETAIL D /LD-6
⊕	MPR STREAM BUBBLERS	RAINBIRD	1806-SAM PRS-SCST-B	.50 GPM. INSTALL AS PER PLAN WITH PCS-#30 SCREEN.	S.D.R.S.D. I-2
⊙	QUICK COUPLING VALVE	RAINBIRD	44LRC	1" SIZE - ISOLATE FROM MAIN WITH GLOVE VALVE	DETAIL C /LD-6
-----	IRRIGATION MAINLINE PIPE (PRESSURE)	---	SCH. 40 PVC	24" DEPTH, SIZE AS NOTED ON PLANS. SLEEVE WHEN UNDER PAVING.	S.D.R.S.D. I-25
———	IRRIGATION LATERAL LINE PIPE (NON-PRESSURE)	---	SCH. 40 PVC	15" DEPTH, 24" DEPTH UNDER DRIVEWAYS. SIZE AS NOTED ON PLANS. SLEEVE WHEN UNDER PAVING PER SLEEVING NOTE BELOW.	S.D.R.S.D. I-25
=====	IRRIGATION SLEEVE	---	SCH. 40 PVC	MINIMUM 2X DIA OF PIPE BEING SLEEVED, 1 PIPE PER SLEEVE, SIZE AS NOTED.	---
P	IRRIGATION ELECTRICAL PULL BOX	---	---	ALL SPLICES SHALL OCCUR IN PULL BOX OR CONTROL VALVE BOXES	S.D.R.S.D. I-15

NOTE:
IRRIGATION CONTROL WIRE SHALL BE INSTALLED IN 1" SCH. 40 PVC SLEEVE UNDER PAVING.

IRRIGATION VALVE KEY
STATION #
GALLONS PER MINUTE (GPM)
VALVE SIZE

IRRIGATION NOTES

ALL IRRIGATION SHALL BE DONE N ACCORDANCE WITH THE PROJECT SPECIFICATIONS, GENERAL PROVISIONS, SPECIAL PROVISIONS, AND THE APPLICABLE PARTS OF SECTIONS 212 AND 308 OF THE 'STANDARD SPECIFICATIONS FOR PUBLIC WORKS CONSTRUCTION' (GREEN BOOK) 1997 EDITION, AND SUPPLEMENTAL AMENDMENTS, AND THE CITY OF SAN DIEGO 'STANDARD DRAWINGS,' (DRAWINGS I-1 THROUGH I-34.) AS WELL AS THE FOLLOWING:

1. CONTRACTOR SHALL INSTALL IRRIGATION SYSTEMS THAT ARE COMPLETE AND FUNCTIONING IN EVERY WAY.
2. PLANS ARE DIAGRAMMATIC AND APPROXIMATE. PRECISE LOCATION OF IRRIGATION LINES, APPURTENANCES, ETC. SHALL BE FIELD ADJUSTED TO MEET MINOR VARIATIONS IN THE PLANS. ALL IRRIGATION EQUIPMENT SHALL BE LOCATED AS INDICATED.
3. ALL MATERIALS AND EQUIPMENT USED IN THE IRRIGATION WORK SHALL BE NEW AND WITHOUT FLAWS OR DEFECTS AND OF QUALITY AND PERFORMANCE AS SPECIFIED.
4. PRIOR TO INSTALLATION OF ANY IRRIGATION WORK, THE CONTRACTOR SHALL SUBMIT, FOR APPROVAL BY THE CCDC, FIVE (5) COPIES MINIMUM, OF A LIST OF ALL MATERIALS AND EQUIPMENT PROPOSED TO BE INSTALLED. SHOULD THE CONTRACTOR PROPOSE TO USE MATERIALS OR EQUIPMENT OTHER THAN THOSE LISTED AS APPROVED, CONTRACTOR SHALL SUBMIT IN WRITING TO THE CITY A REQUEST TO DEVIATE FROM THE APPROVED LIST. SAMPLES OF THE MATERIALS OR EQUIPMENT SHALL ACCOMPANY THE REQUEST TO ASSIST THE EVALUATION OF THE PROPOSAL.
5. CONTRACTOR SHALL CHECK AND VERIFY THE WATER PRESSURE AT THE P.O.C. PRIOR TO BEGINNING OF WORK AND SHALL NOTIFY THE RESIDENT ENGINEER OF ANY DISCREPANCIES WITH THE DESIGN PRESSURE.
6. CONTRACTOR SHALL CHECK AND VERIFY ALL SITE CONDITIONS, UTILITIES, AND SERVICES PRIOR TO TRENCHING. VERIFY POINT OF CONNECTION LOCATION PRIOR TO BEGINNING OF WORK.
7. CONTRACTOR SHALL SUPPLY 'AS-BUILT' DRAWINGS OF THE ENTIRE IRRIGATION SYSTEM, INCLUSIVE OF ALL MAINS, VALVES, SOURCES OF ELECTRICAL POWER FOR CONTROLLER CLOCK, CONTROL WIRES, SLEEVES, AND EMITTERS. LOCATE BY DIMENSIONING FROM TWO FIXED POINTS.
8. A REDUCED 'AS-BUILT' IRRIGATION PLAN, COLOR CODED BY LOCATIONS AND VALVE STATIONS BEING SERVICED BY EACH CONTROLLER, SHALL BE LAMINATED IN PLASTIC AND SHALL BE MOUNTED ON THE INSIDE OF THE IRRIGATION CONTROLLER FOR INFORMATION TO CITY MAINTENANCE PERSONNEL.
9. CONTRACTOR SHALL REQUEST INSPECTIONS BY THE RESIDENT ENGINEER NO LESS THAN FORTY-EIGHT (48) HOURS IN ADVANCE.
10. FLUSH ALL PIPE CLEAN OF DEBRIS PRIOR TO INSTALLATION OF BUBBLER HEADS.
11. ALL IRRIGATION LINES UNDER PAVING SHALL BE SLEEVED WITH SCHEDULE 40 PIPE 2X DIA. OF PIPE BEING SLEEVED. (TYP.)
12. WATER METER, BACKFLOW PREVENTER AND CONTROLLER LOCATIONS WITHIN THE RIGHT-OF-WAY TO BE DETERMINED BY THE RESIDENT ENGINEER. CONTRACTOR SHALL VERIFY WATER PRESSURE PRIOR TO CONSTRUCTION.
13. VERIFY LOCATION OF RAIN SENSOR ON ROOF WITH RESIDENT ENGINEER AND COORDINATE INSTALLATION WITH APPROPRIATE TRADES.
14. SEE PROJECT SPECIFICATIONS FOR ADDITIONAL INFORMATION.

IMPERIAL AVENUE DIVISION BUS MAINTENANCE FACILITY

PRIVATE CONTRACT
IRRIGATION NOTES FOR:
16 TH STREET
SAN DIEGO TRANSIT, IMPERIAL AVE DIVISION – BUS MAINTENANCE FACILITY

CITY OF SAN DIEGO, CALIFORNIA
ENGINEERING DEPARTMENT
SHEET 13 OF 13 SHEETS

W.O. NO. 98-267 (037000)

FOR CITY ENGINEER — DATE 4/28/99

DESCRIPTION	BY	APPROVED	DATE	FILMED
ORIGINAL	ELP			SEP 08 99

1837-6283 NAD 83 COORDINATES
197-1723 LAMBERT COORDINATES

AS-BLT. C.E.
CONTRACTOR C.E. WYLIE DATE STARTED 5-15-1999
INSPECTOR EVERETT MEADOWS DATE COMPLETED 9-24-2000
29557-13-D DWG NO.

EARTH TECH
9675 BUSINESS PARK AVENUE SUITE 110, SAN DIEGO, CA. 92131
TEL: (858) 536-5610

Estrada Land Planning

REGISTERED LANDSCAPE ARCHITECT STEVE ESTRADA No. 1695 EXP. 8-31-99 STATE OF CALIFORNIA

	DATE
DESIGNED BY TRS	4/20/99
DRAWN BY TRS	4/20/99
CHECKED BY SM	4/20/99
MTDB PRJ. ENG.	

MTDB
Metropolitan Transit Development Board
1255 Imperial Avenue, Suite 1000, San Diego, Ca. 92101-7490 (619)231-1466

IMPERIAL AVENUE DIVISION
BUS MAINTENANCE FACILITY
LANDSCAPE
IRRIGATION LEGEND
AND NOTES

SCALE NTS
MTDB CONTRACT NO. BUS-443B
DRAWING NO. LD-7
SHEET NO. 105

AS-BUILT

JOB NUMBER 139-06 R-14 FILE NAME: MAIN/PROJECTS/13906/13906_ID.DWG 4/20/99

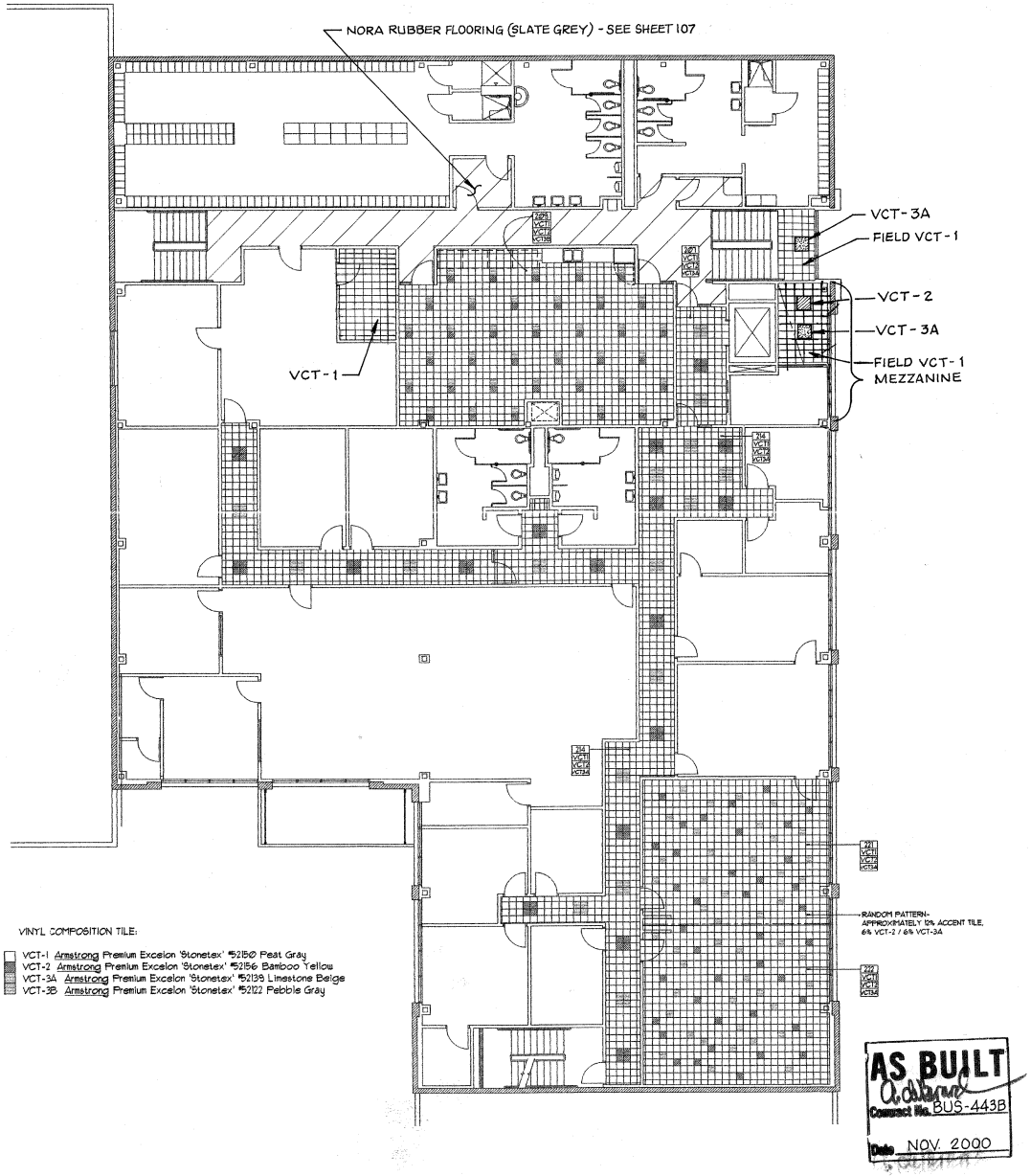

VINYL COMPOSITION TILE:

- VCT-1 Armstrong Premium Excelon 'Stonetex' #52150 Peat Gray
- VCT-2 Armstrong Premium Excelon 'Stonetex' #52156 Bamboo Yellow
- VCT-3A Armstrong Premium Excelon 'Stonetex' #52139 Limestone Beige
- VCT-3B Armstrong Premium Excelon 'Stonetex' #52122 Pebble Gray

AS BUILT
Contract No. BUS-443B
Date NOV. 2000

Cooper Roberts Bennett
COMMERCIAL DESIGN
SPACE PLANNING
1010 UNIVERSITY AVENUE, SUITE C203
SAN DIEGO, CA 92103
(619) 297-1011 FAX (619) 297-3832

IMPERIAL AVENUE DIVISION
BUS MAINTENANCE FACILITY

1255 IMPERIAL AVENUE, SUITE 1000 SAN DIEGO, CA 92101

07/14/00	235.00	△	△
DATE	PROJECT NO.		
1/8" = 1'-0"		△	△
SCALE			
TLN		△	△
DRAWN BY	CHECKED BY	REVISIONS	

VCT PATTERNS

SHEET 106

FINISH SPECIFICATIONS:

CARPET:

C-1 Shaw Contract 'Movement' #15500 Coral

RUBBER FLOORING:

R-1 Norament Round #525B/354/116 Slate Grey

VINYL COMPOSITION TILE:

VCT-1 Armstrong Premium Excelon 'Stonetex' #52150 Peat Gray
VCT-2 Armstrong Premium Excelon 'Stonetex' #52156 Bamboo Yellow
VCT-3A Armstrong Premium Excelon 'Stonetex' #52139 Limestone Beige
VCT-3B Armstrong Premium Excelon 'Stonetex' #52122 Pebble Gray

NOTE: VCT patterns to be determined

BASE:

B-1 Nora Accessories Cove Base #5 1078 B/U, #116 Slate Grey
B-2 Roppe 4" Rubber Base #P128 Eggplant

PAINT:

P-1 ICI #152 River Birch, Eggshell Finish
P-2 ICI #651 Papier Mache, Eggshell Finish
P-3 ICI #623 Night Forest, Eggshell Finish
P-4 ICI #2006 Frost, Eggshell Finish

SOLID SURFACING:

SS-1 Avonite #C1-1200 Flannel Gray

DOORS:

3'-0" x 7'-0" solid-core, stain-grade plain sliced Red Oak, Clear Finish w/Timely pre-finished metal frames, Stone Gray #SC 106

Metal doors and frames in Corridor #201 to be painted:
ICI #212 Ominous

RESTROOM FINISH SPECIFICATIONS:

CERAMIC TILE:

CT-1 Dal Tile Keystones #DK-326 Dapple Gray, 2" x 2" mosaic tile
CT-2 Dal Tile Accentials #0115 Fog, 3" x 3" glazed wall tile
CT-3 Dal Tile Permatones #6546 Matte Purple, 2" x 2" glazed mosaics
CT-4 Dal Tile Permatones #6536 Matte Spice, 2" x 2" glazed mosaics

Note: Permatones to be spec'd as dot mount 1' x 1' checker board sheet to be separated in field and used as 2" x 2" accent band
Refer to Elevation A

GROUT:

Custom Building Products #335 Winter Gray

PAINT:

P-4 ICI #2006 Frost, Semi-gloss Finish

PLASTIC LAMINATE:

PL-1 Wilsonart #4793-60 Windswept (stall partitions)
PL-2 Wilsonart #4661-60 Iron Legacy (lavatory countertop)

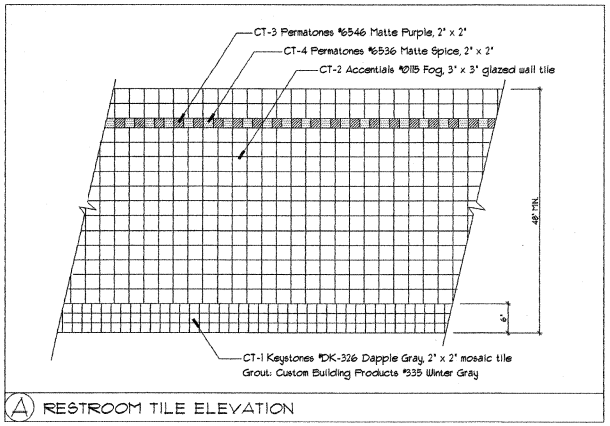

A RESTROOM TILE ELEVATION

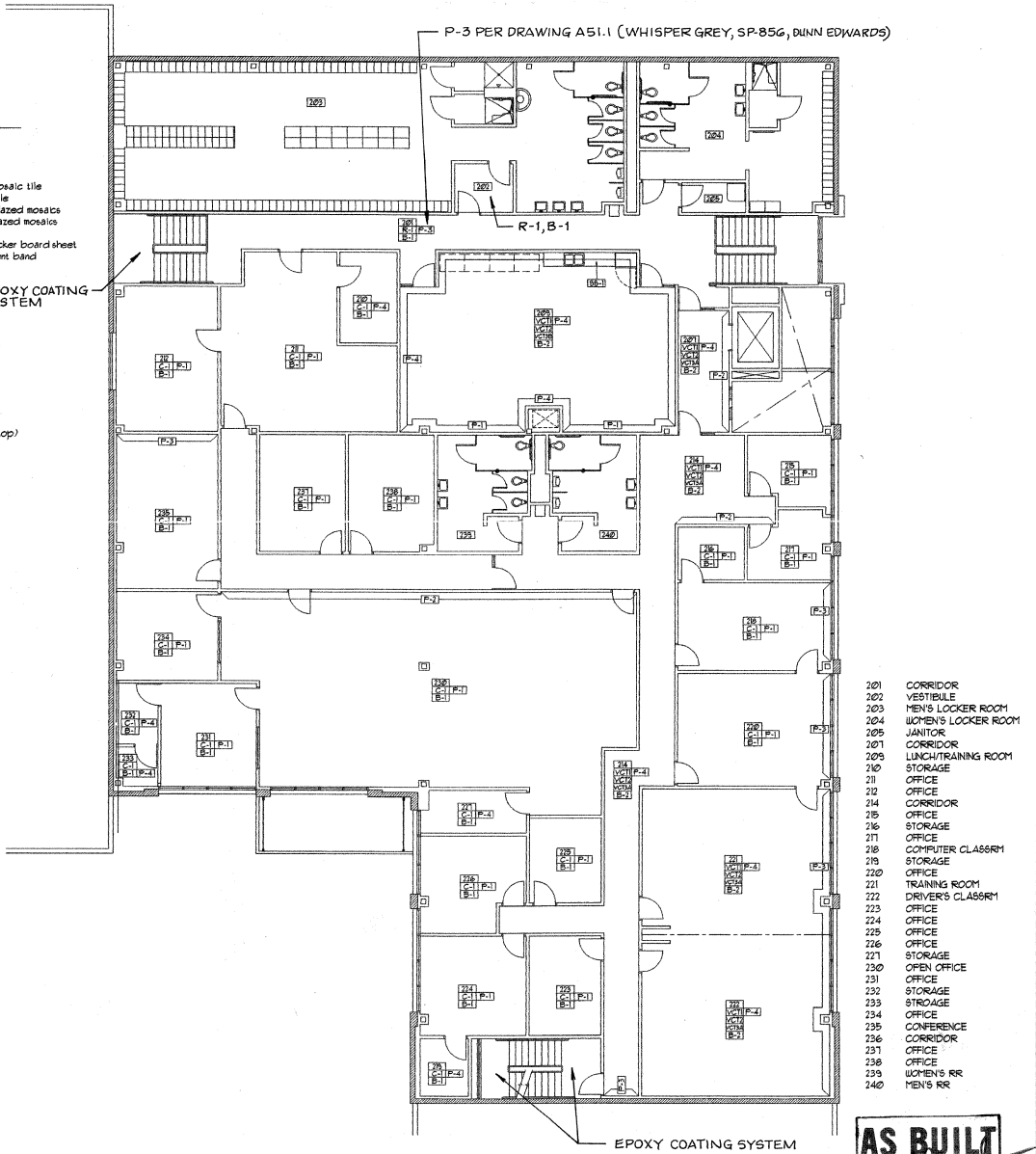

201	CORRIDOR
202	VESTIBULE
203	MEN'S LOCKER ROOM
204	WOMEN'S LOCKER ROOM
205	JANITOR
207	CORRIDOR
209	LUNCH/TRAINING ROOM
210	STORAGE
211	OFFICE
212	OFFICE
214	CORRIDOR
215	OFFICE
216	STORAGE
217	OFFICE
218	COMPUTER CLASSRM
219	STORAGE
220	OFFICE
221	TRAINING ROOM
222	DRIVER'S CLASSRM
223	OFFICE
224	OFFICE
225	OFFICE
226	OFFICE
227	STORAGE
230	OPEN OFFICE
231	OFFICE
232	STORAGE
233	STROAGE
234	OFFICE
235	CONFERENCE
236	CORRIDOR
237	OFFICE
238	OFFICE
239	WOMEN'S RR
240	MEN'S RR

AS BUILT
A. deBraun
Contract No. BUS-443B
Date NOV. 2000

Cooper Roberts Bennett
COMMERCIAL DESIGN
SPACE PLANNING
1010 UNIVERSITY AVENUE, SUITE C203
SAN DIEGO, CA 92103
(619) 291-1011 FAX (619) 291-3833

IMPERIAL AVENUE DIVISION
BUS MAINTENANCE FACILITY

1255 IMPERIAL AVENUE, SUITE 1000 SAN DIEGO, CA 92101

FINISH PLAN - SECOND FLOOR

DATE	06/12/00
PROJECT NO.	235.00
SCALE	1/8" = 1'-0"
DRAWN BY	TLN
CHECKED BY	
REVISIONS	△ △ △ △

SHEET 107

Imperial Ave Division RAM Roof Replacement (PWB466.0-26)

Bidder: Chambers Inc. dba Roof Construction

#	Description	UOM	Qty	Unit Price	Extended Total
1	Remove and Dispose Existing Roofing System	SF	32100	$2.69	$86,349.00
2	Furnish and Install New TPO Roofing System	SF	32100	$6.95	$223,095.00
3	Remove, Dispose, and Replace Sheet Metal Flashing	LS	1	$6,875.00	$6,875.00
4	Roof Penetrations	LS	1	$6,110.00	$6,110.00
5	HVAC and Skylight Roof Curbing	LS	1	$25,141.00	$25,141.00
6	Rubber Block Pipe Supports	LS	1	$3,030.00	$3,030.00
				Total	**$350,600.00**

Metropolitan Transit System

Agenda Item No. 15

MEETING OF THE SAN DIEGO METROPOLITAN TRANSIT SYSTEM
BOARD OF DIRECTORS

July 30, 2026

SUBJECT:

Adoption of 2026 Conflict of Interest Code – Amendment

RECOMMENDATION:

That the San Diego Metropolitan Transit System (MTS) Board of Directors:

1) Adopt Resolution No. 26-13 (Attachment A) amending the MTS Conflict of Interest Code pursuant to the Political Reform Act of 1974;

2) Adopt the amended 2026 MTS Conflict of Interest Code (in substantially the same format as Attachment B); and

3) Forward the amended 2026 MTS Conflict of Interest Code to the County of San Diego (the designated code-reviewing body)

Budget Impact

None.

DISCUSSION:

The Political Reform Act (the "Act") requires all public agencies to adopt and maintain a Conflict of Interest Code containing the rules for disclosure of personal assets. Except for positions listed in Gov. Code § 87200, the Conflict of Interest Code must specifically designate all agency positions that make or participate in the making of decisions and assign specific types of personal assets to be disclosed that may be affected by the exercise of powers and duties of that position.

The Act further requires that an agency amend its Conflict of Interest Code when change is necessitated by changed circumstances which include the need to designate positions.

It is proposed that MTS's Conflict of Interest Code be amended to include new positions that must be designated, revise disclosure categories and revise the titles of existing positions.

San Diego Metropolitan Transit System (MTS) is a California public agency comprised of San Diego Transit Corp., San Diego Trolley, Inc. and San Diego and Arizona Eastern Railway Company (nonprofit public benefit corporations). MTS member agencies include the cities of Chula Vista, Coronado, El Cajon, Imperial Beach, La Mesa, Lemon Grove, National City, Poway, San Diego, Santee, and the County of San Diego. MTS is also the For-Hire Vehicle administrator for multiple cities in San Diego County.

Therefore, staff recommends that the MTS Board of Directors:

1) Adopt Resolution No. 26-13 (Attachment A) amending the MTS Conflict of Interest Code pursuant to the Political Reform Act of 1974;

2) Adopt the amended 2026 MTS Conflict of Interest Code (in substantially the same format as Attachment B); and

3) Forward the amended 2026 MTS Conflict of Interest Code to the County of San Diego (the designated code-reviewing body)

/s/ Sharon Cooney
Sharon Cooney
Chief Executive Officer

Key Staff Contact: Julia Tuer, 619.557.4515, Julia.Tuer@sdmts.com

Attachments: A. Resolution No. 26-13
B. 2026 Conflict of Interest Code

SAN DIEGO METROPOLITAN TRANSIT SYSTEM

Resolution No. 26-13

Resolution of the Board of Directors of the San Diego Metropolitan Transit System Adopting an Amended Conflict of Interest Code Pursuant to the Political Reform Act of 1974

WHEREAS, the State of California enacted the Political Reform Act of 1974, Government Code Section 81000 et seq. (the "Act"), which contains provisions relating to conflicts of interest which potentially affect all officers, employees and consultants of the San Diego Metropolitan Transit System ("MTS") and requires all public agencies to adopt and promulgate a Conflict of Interest Code; and

WHEREAS, the potential penalties for violation of the provisions of the Act are substantial and may include criminal and civil liability, as well as equitable relief which could result in MTS being restrained or prevented from acting in cases where the provisions of the Act may have been violated; and

WHEREAS, the Board of Directors adopted a Conflict of Interest Code (the "Code") which was amended on October 16, 2025, in compliance with the Act; and

WHEREAS, subsequent changed circumstances within MTS have made it advisable and necessary pursuant to Sections 87306 and 87307 of the Act to amend and update MTS's Code; and

WHEREAS, notice of the time and place of a public meeting on, and of consideration by the Board of Directors of, the proposed amended Conflict of Interest Code was provided each designated employee and publicly posted for review at the offices of MTS; and

WHEREAS, a public meeting was held upon the proposed amended Conflict of Interest Code at a regular meeting of the Board of Directors on July 30, 2026, at which all present were given an opportunity to be heard on the proposed amended Conflict of Interest Code.

NOW, THEREFORE, THE BOARD OF DIRECTORS OF THE SAN DIEGO METROPOLITAN TRANSIT SYSTEM DOES HEREBY RESOLVE AS FOLLOWS:

SECTION 1. The Board of Directors does hereby adopt the proposed amended Conflict of Interest Code, a copy of which is attached hereto and shall be on file with the General Counsel and available to the public for inspection and copying during regular business hours.

SECTION 2. The said amended Conflict of Interest Code shall be submitted to the Board of Supervisors of the County of San Diego for approval.

SECTION 3. The said amended Conflict of Interest Code shall become effective immediately after the Board of Supervisors approves the proposed amended Code as submitted.

PASSED, APPROVED AND ADOPTED, by this Board this 30TH day of July 2026.

AYES:

NAYS:

ABSENT:

ABSTAINING:

Chairperson
San Diego Metropolitan Transit System

Filed by:

Clerk of the Board
San Diego Metropolitan Transit System

Approved as to form:

General Counsel
San Diego Metropolitan Transit System

Resolution No. 26-13

LAW OFFICES OF
BEST BEST & KRIEGER LLP

CONFLICT OF INTEREST CODE

OF THE

SAN DIEGO METROPOLITAN TRANSIT SYSTEM

LAW OFFICES OF
BEST BEST & KRIEGER LLP

CONFLICT OF INTEREST CODE

OF THE

SAN DIEGO METROPOLITAN TRANSIT SYSTEM

(Amended ~~October 16, 2025~~ July 30, 2026)

The Political Reform Act, (Government Code Sections 81000, et seq.) requires state and local government agencies to adopt and promulgate conflict of interest codes. The Fair Political Practices Commission has adopted a regulation (2 California Code of Regulation Section 18730) that contains the terms of a standard model conflict of interest code, which can be incorporated by reference in an agency's code. After public notice and hearing Section 18730 may be amended by the Fair Political Practices Commission to conform to amendments in the Political Reform Act. Therefore, the terms of 2 California Code of Regulations Section 18730 and any amendments to it duly adopted by the Fair Political Practices Commission are hereby incorporated by reference. This regulation and the attached Appendix designating positions and establishing disclosure categories shall constitute the conflict of interest code of the **San Diego Metropolitan Transit System (MTS).**

~~All officials and designated positions shall file their statements of economic interests with MTS's **Executive Assistant/Clerk of the Board** as MTS's Filing Officer. The **Executive Assistant/Clerk of the Board** shall make and retain a copy of all statements filed by Members and Alternates of the Board of Directors, Chief Executive Officer and the Chief Financial Officer, and forward the originals of such statements to the Clerk of the Board of Supervisors of the County of San Diego. The **Executive Assistant/Clerk of the Board** shall retain the originals of the statements filed by all other designated positions. The **Executive Assistant/Clerk of the Board** will make all retained statements available for public inspection and reproduction during regular business hours (Gov. Code Section 81008).~~

Officials Who Manage Public Investments shall electronically file their statements of economic interests directly with the Fair Political Practices Commission. Individuals holding designated positions shall file their statements of economic interests with ~~the District~~MTS, which will make the statements available for public inspection and reproduction. (Government Code Section 81008.)

LAW OFFICES OF
BEST BEST & KRIEGER LLP

APPENDIX

CONFLICT OF INTEREST CODE

OF THE

SAN DIEGO METROPOLITAN TRANSIT SYSTEM

(Amended ~~October 16, 2025~~ July 30, 2026)

PART "A"

OFFICIALS WHO MANAGE PUBLIC INVESTMENTS

MTS Officials who manage public investments, as defined by 2 Cal. Code of Regs. § 18700.3, are NOT subject to MTS's Code, but must file disclosure statements under Government Code section 87200 et seq. [Regs. § 18730(b)(3)] These positions are listed here for informational purposes only.

It has been determined that the positions listed below are officials who manage public investments[1]:

Board of Directors and Alternates

Chief Executive Officer

Chief Financial Officer

Deputy Chief Financial Officer

Investment Consultant

[1] Individuals holding one of the above-listed positions may contact the Fair Political Practices Commission for assistance or written advice regarding their filing obligations if they believe that their position has been categorized incorrectly. The Fair Political Practices Commission makes the final determination whether a position is covered by § 87200.

LAW OFFICES OF
BEST BEST & KRIEGER LLP

DESIGNATED POSITIONS

GOVERNED BY THE CONFLICT OF INTEREST CODE

DESIGNATED POSITIONS' TITLE OR FUNCTION	DISCLOSURE CATEGORIES ASSIGNED
Administrative Assistant II – Operations	5
Assistant Manager of Facilities	5
Assistant Manager of Field Operations	5
Assistant Manager of Procurement (Professional Services)	4
Assistant Manager – Transit Assets	4, 9
Assistant Superintendent of LRV Maintenance	5
Assistant Superintendent of Wayside Maintenance	5
Associate Transportation Planner	5
Business Systems Analyst (ALL)	5
Buyer	4
Chief Human Resources Officer	5
Chief Information Officer	5
Chief of Staff	1
Chief Operating Officer – Rail	1
Chief Operating Officer – Transit Services	1
Community Engagement Specialist	5
Contract Administrator (ALL)	4
Contract Operations Administrator	5
Controller	1, 2
Creative Design Manager	5
Deputy Director of Transit – Security & Passenger Safety	5
Deputy General Counsel	1, 2
Senior Director of Capital Projects	1, 2
Director of Contract Services & Passenger Facilities	3, 5
Director of Fare Technology and Operations	5
Director of Financial Planning & Analysis	1, 2

LAW OFFICES OF
BEST BEST & KRIEGER LLP

DESIGNATED POSITIONS' TITLE OR FUNCTION	DISCLOSURE CATEGORIES ASSIGNED
Director of Fleet and Facility Maintenance	5
Director of Human Resources	5
Director of LRV Maintenance	5
Director of Maintenance of Way (MOW)	5
Director of Marketing & Communications	5
Director of Planning & Scheduling	1, 2
Director of Rail Maintenance	5
Director of Rail Transportation	5
Director of Supply Chain & Operations	4
Director of Support Services	5
Director of Transit Security & Passenger Safety	5
Director of Transportation	1
Division Manager of Maintenance (ALL)	5
Environmental Health & Safety Manager	5
Executive Assistant (COO Bus)	5
Facilities Maintenance Supervisor	5
Facilities Supervisor (Bus)	5
Fare Systems Administrator	5
Financial Analyst (Capital and Grants)	5, 9
Financial Analyst (Operating Budget)	4
Financial Analyst	4
Foreman	5
For-Hire Vehicle Administration Manger	5, 6
General Counsel	1, 2
Grant Analyst	5, 9
Grants Administrator	5, 9
Graphic Designer (ALL)	5

LAW OFFICES OF
BEST BEST & KRIEGER LLP

DESIGNATED POSITIONS' TITLE OR FUNCTION	DISCLOSURE CATEGORIES ASSIGNED
Information Security & Intelligence Engineer	5
Information Security Manager	5
Information Technology Development Manager	5
Information Technology Enterprise Architect (IoT)	5
Information Technology Operations Manager	5
Internal Auditor	4
Learning and Development Manager	5
Liability Claims Supervisor	1, 2
Maintenance of Way (MOW) Contracts and Budget Analyst	5
Manager of Rail Planning and Performance	5, 8
Manager of Benefits & Compensation	5
Manager of Financial Planning and Analysis	1, 2
Manager of Government Affairs	1
Manager of Human Resources	5
Manager of Inventory Operations	4
Manager of Marketing and Communications	5
Manager of Operations – Transit Security and Passenger Safety	5
Manager of Paratransit & Mini Bus	5
Manager of Planning and Analytics	5
Manager of Planning and Reporting	5
Manager of Procurement	4
Manager of PRONTO and Passenger Support	5
Manager of Real Estate Assets	1, 2
Manager of Risk and Claims	1, 2
Manager of Safety (BUS)	5
Manager of Scheduling	5
Manager of Service Operations	5

DESIGNATED POSITIONS' TITLE OR FUNCTION	DISCLOSURE CATEGORIES ASSIGNED
Manager of Support Services	2, 3, 5
Manager of Talent Acquisition	5
Manager of Track and Structure	5
Manager of Training (Transportation)	5
Manager of Transportation Communication and Technology	5
Multimedia Designer	5
Network Engineer III	5
Network Operations Manager	5
Office Support Coordinator	4
Principal Contract Administrator	4
Procurement Specialist ~~(ALL)~~ I	4
Procurement Specialist II	4
Professional Standards Manager	7
Project Administrator	5
Project Engineer	1, 2
Project Manager (ALL)	1, 2
Public Relations Specialist	5
Quality Assurance Supervisor	5
Report Development Analyst	5
Revenue Maintenance Supervisor (ALL)	5
Revenue Operations Manager	5
Right of Way Permit Coordinator	2, 5, 6
Right of Way Permit Manager	2, 5, 6
SAP Software Developer	5
Security System Administrator	5
Senior Contract Operations Administrator	5
Senior Data Warehouse Engineer	5

LAW OFFICES OF
BEST BEST & KRIEGER LLP

DESIGNATED POSITIONS' TITLE OR FUNCTION	DISCLOSURE CATEGORIES ASSIGNED
Senior Financial Analyst (Capital & Grants)	5, 9
Senior Human Resources Analyst	5
Senior Procurement Specialist	4
Senior Project Manager (ALL)	1, 2
Senior Transportation Planner	1, 2
Service Desk Supervisor	5
Software Developer	5
Staff Attorney	1, 2
Superintendent of Facilities	5
Superintendent of LRV Maintenance	5
Superintendent of Wayside Maintenance	5
Supervisor of Maintenance Training	5
Supervisor of Paratransit & Mini Bus	5
Supervisor of Passenger Facilities	5
Technical Project Manager	5
Transit Asset Management Program Manager	2, 4, 9
Transit Store Supervisor	5
Worker's Compensation Analyst (ALL)	7
ZEV and Sustainability Manager	5

Consultant and New Positions[2]

---

[2] Individuals serving as a Consultant defined in Regulation 18700.3, or in a new position created since this Code was last amended that makes or participates in making decisions shall disclose pursuant to the broadest disclosure category in this Code subject to the following limitation:

The Chief Executive Officer may determine that, due to the range of duties or contractual obligations, it is more appropriate to assign a limited disclosure requirement. A clear explanation of the duties and a statement of the extent of the disclosure requirements must be in a written document. (Gov. Code Sec. 82019; FPPC Regulations 18219 and 18734.). The Chief Executive Officer's determination is a public record and shall be retained for public inspection in the same manner and location as this Conflict of Interest Code. (Gov. Code Sec. 81008.)

LAW OFFICES OF
BEST BEST & KRIEGER LLP

PART "B"

DISCLOSURE CATEGORIES

The disclosure categories listed below identify the types of economic interests that the designated position must disclose for each disclosure category to which the designated is assigned.[3] "Investment" means financial interest in any business entity (including a consulting business, or other independent contracting business) and are reportable if they are either located in, doing business in, planning to do business in, or have done business during the previous two years in the jurisdiction of MTS.

Category 1: All investments, business positions in business entities and sources of income (including receipt of gifts, loans and travel payments). Real property located within the jurisdiction as well as real property within two miles of the real property used by MTS or the potential site.

Category 2: All interests in real property located within the jurisdiction as well as real property within two miles of the real property owned or used by the agency or potential site.

Category 3: All investments, business positions in business entities, and sources of income (including receipt of gifts, loans and travel payments) that are engaged in land development, construction or the acquisition or sale of real property within the jurisdiction of MTS.

Category 4: All investments, business positions in business entities, and sources of income (including receipt of gifts, loans and travel payments) that provide services (including training or consulting services), products, materials, machinery, vehicles or equipment of the type purchased or leased by MTS.

Category 5: All investments, business positions in business entities, and sources of income (including receipt of gifts, loans and travel payments) that provide services (including training or consulting services), products, materials, machinery, vehicles or equipment of the type purchased or leased by the designated position's department, unit or division.

Category 6: All investments, business positions in business entities, and sources of income (including receipt of gifts, loans and travel payments) subject to the regulatory, permit, or licensing authority of the designated position's department, unit or division.

---

[3] This Conflict of Interest Code does not require the reporting of gifts from outside this agency's jurisdiction if the source does not have some connection with or bearing upon the functions of the position. (Reg. 18730.1)

Category 7: All investments, business positions in business entities, and sources of income (including receipt of gifts, loans, and travel payments) if such entities or sources have filed claims against MTS in the past 2 years, or have a claim pending before MTS.

Category 8: All investments, business positions in business entities, and sources of income (including receipt of gifts, loans and travel payments) that are located in, do business in, or own real property within the geographical area of, and within two miles of, the designated position's assigned project area.

Category 9: All investments, business positions in business entities, and sources of income, including receipt of gifts, loans and travel payments, or income from a nonprofit or other organization, if the source is of the type to receive grants or other monies from or through MTS or its subdivisions.

Metropolitan Transit System

Agenda Item No. 16

MEETING OF THE SAN DIEGO METROPOLITAN TRANSIT SYSTEM
BOARD OF DIRECTORS

July 30, 2026

SUBJECT:

San Diego Metropolitan Transit System (MTS) Employees Updated List Authorized to Transfer Funds to and from Local Agency Investment Fund (LAIF) Accounts – Resolution

RECOMMENDATION:

That the Board of Directors approve Resolution No. 26-11 (Attachment A) and Resolution No. 26-12 (Attachment B) to update the list of MTS employees authorized to transfer funds to and from the MTS and San Diego Transit Corporation (SDTC) LAIF investment accounts, administered by the State Treasurer.

Budget Impact

None.

DISCUSSION:

The LAIF is a program offered by the State Treasurer's Office. The program offers local agencies like MTS the opportunity to participate in a major portfolio that invests hundreds of millions of dollars using the investment expertise of the State Treasurer's Office investment staff at no additional cost to the taxpayer. MTS invests excess funds into two accounts at LAIF, one for MTS and one for SDTC. To protect public funds and document authorized transfers, LAIF requires agency-adopted resolutions to establish or modify the list of employees who are authorized to transfer funds to and from an agency's LAIF account.

Similarly, MTS Board Policy No. 41 (Signature Authority), establishes in Section 41.1b the Authorized Signatories for Internal Transfers:

41.1b Authorized Signatories for Internal Transfers

An internal transfer is a transfer of funds from one MTS-owned account to another held with various financial institutions including, but not limited to, a financial banking institution, the County of San Diego Investment Pool, and the Local Agency Investment Fund (LAIF) through the State of California Treasurer's Office. These transfers are most commonly transacted to meet grant requirements or to increase interest earnings by investing excess funds. For these transfers, only a single signature is needed, regardless of amount, and can be approved by the Controller,

San Diego Metropolitan Transit System (MTS) is a California public agency comprised of San Diego Transit Corp., San Diego Trolley, Inc. and San Diego and Arizona Eastern Railway Company (nonprofit public benefit corporations). MTS member agencies include the cities of Chula Vista, Coronado, El Cajon, Imperial Beach, La Mesa, Lemon Grove, National City, Poway, San Diego, Santee, and the County of San Diego. MTS is also the For-Hire Vehicle administrator for multiple cities in San Diego County.

Deputy Chief Financial Officer, Chief Financial Officer, General Counsel or Chief Executive Officer.

The current LAIF resolution on file authorizes MTS Controller, Erin Dunn,[1] to access the LAIF account. However, to provide back up and redundancy in duties, the Assistant Controller may also need to schedule wires between LAIF and the MTS operating bank account. These transfers are most commonly transacted to meet grant requirements or to increase interest earnings by investing excess funds. These actions are conducted in compliance with Board Policy 41.1b and other applicable policies. The funds can only go to and from the MTS operating banking account and there is no ability to move the funds to unauthorized accounts.

Today's propose action would not authorize the Assistant Controller to independently approve a transfer of funds to or from a LAIF account. Prior to scheduling a wire with LAIF, consistent with Board Policy 41.1b, these transfers are approved by either the Controller, Deputy Chief Financial Officer, Chief Financial Officer, General Counsel or Chief Executive Officer.

MTS staff is requesting that the Board of Directors approve Resolution 26-11 and Resolution 26-12 to add Jennifer Pentoney, Assistant Controller, as an authorized employee to access MTS's LAIF accounts. No other changes are being made.

Attachment A contains a list of MTS employees to be authorized to transfer funds to and from the MTS LAIF account. Attachment B contains a list of MTS employees to be authorized to transfer funds to and from the SDTC LAIF account.

/s/ Sharon Cooney
Sharon Cooney
Chief Executive Officer

Key Staff Contact: Julia Tuer, 619.557.4515, Julia.Tuer@sdmts.com

Attachments: A. Resolution No. 26-11
B. Resolution No. 26-12

[1] Also authorized are the Chief Financial Officer, Deputy Chief Financial Officer, General Counsel, and Chief Executive Officer.

SAN DIEGO METROPOLITAN TRANSIT SYSTEM

RESOLUTION NO. 26-11

Resolution Regarding the LAIF Investment Account in the name of San Diego Metropolitan Transit System, also known as San Diego Metropolitan Transit Development Board

WHEREAS, section 16429.1 was added to the California Government Code to create a Local Agency Investment Fund (LAIF) in the State Treasury for the deposit of money of a local agency for the purposes of investment by the State Treasurer; and

WHEREAS, San Diego Metropolitan Transit System (MTS) has established an account with the LAIF in accordance with Government Code section 16429.1 et. seq. for the purpose of investment in the best interests of San Diego Metropolitan Transit System; and

WHEREAS, MTS desires to update the list of individuals authorized to take action related to the LAIF account;

NOW THEREFORE, BE IT RESOLVED:

Section 1. The following MTS officers holding the titles specified below or their successors in office are each hereby authorized to order the deposit or withdrawal of monies in the LAIF and may execute and deliver any and all documents necessary or advisable in order to effectuate the purposes of this resolution and the transactions contemplated hereby:

Sharon Cooney	Karen Landers	Larry Marinesi
(NAME)	(NAME)	(NAME)
Chief Executive Officer	General Counsel	Chief Financial Officer
(TITLE)	(TITLE)	(TITLE)
_____	_____	_____
(SIGNATURE)	(SIGNATURE)	(SIGNATURE)
Erin Dunn	Mike Thompson	Jennifer Pentoney
(NAME)	(NAME)	
Controller	Deputy Chief Financial Officer	Assistant Controller
(TITLE)	(TITLE)	(TITLE)
_____	_____	_____
(SIGNATURE)	(SIGNATURE)	(SIGNATURE)

Section 2. This resolution shall remain in full force and effect until rescinded by the MTS Board of Directors by resolution and a copy of the resolution rescinding this resolution is filed with the State Treasurer's Office.

PASSED AND ADOPTED by the Board of Directors this 30th day of July 2026, by the following vote:

AYES:

NAYS:

ABSENT:

ABSTAINING:

Chairperson
San Diego Metropolitan Transit System

Filed by:

Office of the Clerk of the Board
San Diego Metropolitan Transit System

Approved as to form:

Office of the General Counsel
San Diego Metropolitan Transit System

Resolution No. 26-11

SAN DIEGO METROPOLITAN TRANSIT SYSTEM

RESOLUTION NO. 26-12

Resolution Regarding the Additional LAIF Investment Account in the name of San Diego Transit Corporation, a wholly owned subsidiary of San Diego Metropolitan Transit System

WHEREAS, section 16429.1 was added to the California Government Code to create a Local Agency Investment Fund (LAIF) in the State Treasury for the deposit of money of a local agency for the purposes of investment by the State Treasurer; and

WHEREAS, San Diego Metropolitan Transit System (MTS) has established an account in the name of San Diego Transit Corporation with LAIF in accordance with Government Code section 16429.1 et. seq. for the purpose of investment in the best interests of San Diego Metropolitan Transit System; and

WHEREAS, MTS desires to update the list of individuals authorized to take action related to the LAIF account in the name of San Diego Transit Corporation;

NOW THEREFORE, BE IT RESOLVED:

Section 1: The following MTS officers holding the titles specified below or their successors in office are each hereby authorized to order the deposit or withdrawal of monies in the LAIF and may execute and deliver any and all documents necessary or advisable in order to effectuate the purposes of this resolution and the transactions contemplated hereby:

Sharon Cooney	Karen Landers	Larry Marinesi
(NAME)	(NAME)	(NAME)
Chief Executive Officer	General Counsel	Chief Financial Officer
(TITLE)	(TITLE)	(TITLE)
_____	_____	_____
(SIGNATURE)	(SIGNATURE)	(SIGNATURE)
Erin Dunn	Mike Thompson	Jennifer Pentoney
(NAME)	(NAME)	
Controller	Deputy Chief Financial Officer	Assistant Controller
(TITLE)	(TITLE)	(TITLE)
_____	_____	_____
(SIGNATURE)	(SIGNATURE)	(SIGNATURE)

Section 2. This resolution shall remain in full force and effect until rescinded by the MTS Board of Directors by resolution and a copy of the resolution rescinding this resolution is filed with the State Treasurer's Office.

PASSED AND ADOPTED by the Board of Directors this 30th day of July 2026, by the following vote:

AYES:

NAYS:

ABSENT:

ABSTAINING:

Chairperson
San Diego Metropolitan Transit System

Filed by:

Office of the Clerk of the Board
San Diego Metropolitan Transit System

Approved as to form:

Office of the General Counsel
San Diego Metropolitan Transit System

Resolution No. 26-12

Metropolitan Transit System

Agenda Item No. 17

MEETING OF THE SAN DIEGO METROPOLITAN TRANSIT SYSTEM
BOARD OF DIRECTORS

July 30, 2026

SUBJECT:

Operations Budget Status Report for May 2026

INFORMATIONAL ONLY

Budget Impact

None.

DISCUSSION:

This report summarizes the year-to-date operating results for May 2026 compared to the Fiscal Year (FY) 2026 amended budget for the San Diego Metropolitan Transit System (MTS). Attachment A-1 combines the operations', administrations' and other activities' results for May 2026. Attachment A-2 details the May 2026 combined operations' results and Attachments A-3 to A-7 present budget comparisons for each MTS operation. Attachment A-8 details budget comparisons for MTS Administration, and Attachment A-9 provides May 2026 results for MTS's other activities (For Hire Vehicle Administration (FHVA)/San Diego and Arizona Eastern Railway Company (SD&AE).

MTS NET-OPERATING SUBSIDY RESULTS

As indicated within Attachment A-1, for the year-to-date period ending May 2026, MTS's net-operating income favorable variance totaled $2,902,000 (0.9%). Operations produced a $638,000 (-0.2%) unfavorable variance and the administrative/other activities areas were favorable by $3,541,000.

MTS COMBINED RESULTS

Operating Revenues. Year-to-date combined revenues through May 2026 were $105,611,000 compared to the year-to-date budget of $103,065,000, representing a $2,545,000 (2.5%) favorable variance. Year-to-date passenger revenue was favorable to budget by $346,000 (0.5%) through May. Passenger revenue was $3,045,000 (4.3%) higher than the prior year.

Other operating revenue was favorable by $2,199,000 (7.5%), primarily due to favorable interest income and miscellaneous revenue.

Operating Expenses. Year-to-date combined expenses through May 2026 were $427,741,000 compared to the budget of $428,098,000 resulting in a $357,000 (0.1%) favorable variance.

Personnel Costs. Year-to-date personnel-related costs totaled $185,101,000, compared to a budgetary figure of $185,834,000, producing a favorable variance of $734,000 (0.4%). This is primarily due to favorable Maintenance wages, cost recovery, and health and welfare within Bus Operations, flagging cost recovery within Rail Operations, and Security wages within Administration.

Outside Services and Purchased Transportation. Outside services in total through May 2026 were $152,578,000, compared to a budget of $154,955,000, resulting in a favorable variance of $2,377,000 (1.5%). This is primarily due to favorable Informational Technology (IT) general outside services and contracted security services within Administration. Performance bonuses are also favorable within Fixed Route Operations, and purchased transportation costs within Fixed Route and Paratransit are favorable.

Materials and Supplies. Total year-to-date materials and supplies expenses were $19,584,000, compared to a budgetary figure of $19,171,000, resulting in an unfavorable variance of $413,000 (-2.2%). This is primarily due to unfavorable revenue vehicle parts and maintenance supplies within Bus Operations.

Energy. Total year-to-date energy costs were $46,250,000, compared to the budget of $46,798,000, resulting in a favorable variance of $549,000 (1.2%). This is primarily due to favorable commodity rates and consumption for Compressed Natural Gas (CNG).

Risk Management. Total year-to-date expenses for risk management were $15,298,000 compared to the budget of $12,450,000, resulting in an unfavorable variance totaling $2,849,000 (-22.9%). This is primarily due to unfavorable claims payouts within Bus Operations. The FY 2026 amended budget assumed the usage of funds from MTS Self Insurance Reserve (SIR). The current variance does not represent any usage of the SIR to offset claim payouts. Due to changes in the timing of claim payments, and potential favorable budget results overall, staff will evaluate whether to use SIR funds to offset claim costs at year end.

General and Administrative. The year-to-date general and administrative costs were $6,741,000 through May 2026, compared to a budget of $6,728,000, resulting in an unfavorable variance of $12,000 (-0.2%). This is primarily due to unfavorable Pronto fare materials usage and credit card fees.

Vehicle and Facility Leases. The year-to-date vehicle and facilities lease costs were $2,190,000 compared to the budget of $2,161,000, resulting in an unfavorable variance of $29,000 (-1.3%). This is primarily due to unfavorable radio tower lease costs within Rail Operations and non-revenue vehicle lease costs within Bus Operations.

YEAR-TO-DATE SUMMARY

The May 2026, year-to-date net-operating income totaled a favorable variance of $2,902,000 (0.9%). These factors include favorable variances in passenger revenue, other operating revenue, personnel costs, outside services, and energy, partially offset by unfavorable materials and supplies, risk management, general and administrative, and vehicle/facility leases.

/s/ Sharon Cooney
Sharon Cooney
Chief Executive Officer

Key Staff Contact: Julia Tuer, 619.557.4515, Julia.Tuer@sdmts.com

Attachment: A. Comparison to Budget

SAN DIEGO METROPOLITAN TRANSIT SYSTEM

MTS
CONSOLIDATED
COMPARISON TO BUDGET - FISCAL YEAR 2026
MAY 31, 2026
(in $000's)

	YEAR TO DATE			
	ACTUAL	BUDGET	VARIANCE	VAR. %
Passenger Revenue	$ 74,167	$ 73,821	$ 346	0.5%
Other Revenue	31,444	29,245	2,199	7.5%
Total Operating Revenue	**$ 105,611**	**$ 103,065**	**$ 2,545**	**2.5%**
Personnel costs	$ 185,101	$ 185,834	$ 734	0.4%
Outside services	152,578	154,955	2,377	1.5%
Materials and supplies	19,584	19,171	(413)	-2.2%
Energy	46,250	46,798	549	1.2%
Risk management	15,298	12,450	(2,849)	-22.9%
General & administrative	6,741	6,728	(12)	-0.2%
Vehicle/facility leases	2,190	2,161	(29)	-1.3%
Administrative Allocation	0	(0)	(0)	0.0%
Total Operating Expenses	**$ 427,741**	**$ 428,098**	**$ 357**	**0.1%**
Operating Income (Loss)	**$ (322,130)**	**$ (325,032)**	**$ 2,902**	**0.9%**
Total Non-Operating Activities	**271**	**295**	**(24)**	**-8.1%**
Income (Loss) before Capital Contributions	**$ (321,859)**	**$ (324,737)**	**$ 2,878**	**-0.9%**

SAN DIEGO METROPOLITAN TRANSIT SYSTEM

OPERATIONS
CONSOLIDATED

COMPARISON TO BUDGET - FISCAL YEAR 2026
MAY 31, 2026
(in $000's)

	YEAR TO DATE			
	ACTUAL	BUDGET	VARIANCE	VAR. %
Passenger Revenue	$ 74,167	$ 73,821	$ 346	0.5%
Other Revenue	727	694	33	4.7%
Total Operating Revenue	**$ 74,893**	**$ 74,515**	**$ 378**	**0.5%**
Personnel costs	$ 151,842	$ 152,388	$ 545	0.4%
Outside services	125,166	126,430	1,264	1.0%
Materials and supplies	19,514	19,101	(413)	-2.2%
Energy	45,232	45,685	452	1.0%
Risk management	14,318	11,440	(2,878)	-25.2%
General & administrative	1,162	1,205	43	3.5%
Vehicle/facility leases	1,577	1,546	(31)	-2.0%
Administrative Allocation	38,218	38,218	(0)	0.0%
Total Operating Expenses	**$ 397,030**	**$ 396,013**	**$ (1,017)**	**-0.3%**
Operating Income (Loss)	**$ (322,136)**	**$ (321,498)**	**$ (638)**	**-0.2%**
Total Non-Operating Activities	**271**	**295**	**(24)**	**-8.1%**
Income (Loss) before Capital Contributions	**$ (321,865)**	**$ (321,203)**	**$ (662)**	**0.2%**

SAN DIEGO METROPOLITAN TRANSIT SYSTEM

OPERATIONS
BUS - DIRECTLY OPERATED (SAN DIEGO TRANSIT CORP.)
COMPARISON TO BUDGET - FISCAL YEAR 2026
MAY 31, 2026
(in $000's)

	YEAR TO DATE			
	ACTUAL	BUDGET	VARIANCE	VAR. %
Passenger Revenue	$ 18,969	$ 19,003	$ (34)	-0.2%
Other Revenue	58	34	23	68.1%
Total Operating Revenue	**$ 19,026**	**$ 19,037**	**$ (11)**	**-0.1%**
Personnel costs	$ 92,137	$ 92,476	$ 339	0.4%
Outside services	2,105	2,278	173	7.6%
Materials and supplies	7,863	7,387	(475)	-6.4%
Energy	6,953	7,340	387	5.3%
Risk management	8,623	5,843	(2,780)	-47.6%
General & administrative	644	664	21	3.1%
Vehicle/facility leases	587	574	(13)	-2.2%
Administrative Allocation	7,082	7,082	(0)	0.0%
Total Operating Expenses	**$ 125,993**	**$ 123,644**	**$ (2,349)**	**-1.9%**
Operating Income (Loss)	**$ (106,967)**	**$ (104,607)**	**$ (2,360)**	**-2.3%**
Total Non-Operating Activities	**-**	**-**	**-**	**-**
Income (Loss) before Capital Contributions	**$ (106,967)**	**$ (104,607)**	**$ (2,360)**	**2.3%**

SAN DIEGO METROPOLITAN TRANSIT SYSTEM

OPERATIONS
RAIL (SAN DIEGO TROLLEY INC.)
COMPARISON TO BUDGET - FISCAL YEAR 2026
MAY 31, 2026
(in $000's)

	YEAR TO DATE			
	ACTUAL	BUDGET	VARIANCE	VAR. %
Passenger Revenue	$ 30,532	$ 29,979	$ 553	1.8%
Other Revenue	669	660	9	1.4%
Total Operating Revenue	**$ 31,201**	**$ 30,639**	**$ 562**	**1.8%**
Personnel costs	$ 58,834	$ 59,031	$ 197	0.3%
Outside services	16,537	16,784	247	1.5%
Materials and supplies	11,530	11,595	65	0.6%
Energy	29,572	28,875	(697)	-2.4%
Risk management	5,680	5,582	(98)	-1.8%
General & administrative	505	522	17	3.3%
Vehicle/facility leases	636	616	(20)	-3.2%
Administrative Allocation	28,045	28,045	0	0.0%
Total Operating Expenses	**$ 151,340**	**$ 151,051**	**$ (289)**	**-0.2%**
Operating Income (Loss)	**$ (120,139)**	**$ (120,412)**	**$ 273**	**0.2%**
Total Non-Operating Activities	**-**	**-**	**-**	**-**
Income (Loss) before Capital Contributions	**$ (120,139)**	**$ (120,412)**	**$ 273**	**-0.2%**

SAN DIEGO METROPOLITAN TRANSIT SYSTEM

OPERATIONS
BUS - CONTRACTED SERVICES (FIXED ROUTE)
COMPARISON TO BUDGET - FISCAL YEAR 2026
MAY 31, 2026
(in $000's)

	YEAR TO DATE			
	ACTUAL	BUDGET	VARIANCE	VAR. %
Passenger Revenue	$ 23,070	$ 23,233	$ (163)	-0.7%
Other Revenue	-	-	-	-
Total Operating Revenue	**$ 23,070**	**$ 23,233**	**$ (163)**	**-0.7%**
Personnel costs	$ 694	$ 699	$ 5	0.8%
Outside services	88,403	89,062	659	0.7%
Materials and supplies	120	119	(2)	-1.5%
Energy	7,626	8,086	460	5.7%
Risk management	-	-	-	-
General & administrative	9	12	3	24.3%
Vehicle/facility leases	40	41	1	3.0%
Administrative Allocation	2,564	2,564	(0)	0.0%
Total Operating Expenses	**$ 99,457**	**$ 100,584**	**$ 1,127**	**1.1%**
Operating Income (Loss)	**$ (76,386)**	**$ (77,351)**	**$ 965**	**1.2%**
Total Non-Operating Activities	**-**	**-**	**-**	**-**
Income (Loss) before Capital Contributions	**$ (76,386)**	**$ (77,351)**	**$ 965**	**-1.2%**

SAN DIEGO METROPOLITAN TRANSIT SYSTEM

OPERATIONS
BUS - CONTRACTED SERVICES (PARATRANSIT)
COMPARISON TO BUDGET - FISCAL YEAR 2026
MAY 31, 2026
(in $000's)

	YEAR TO DATE			
	ACTUAL	BUDGET	VARIANCE	VAR. %
Passenger Revenue	$ 1,596	$ 1,606	$ (10)	-0.6%
Other Revenue	-	-	-	-
Total Operating Revenue	**$ 1,596**	**$ 1,606**	**$ (10)**	**-0.6%**
Personnel costs	$ 178	$ 182	$ 4	2.2%
Outside services	17,849	18,010	161	0.9%
Materials and supplies	-	-	-	-
Energy	1,081	1,383	303	21.9%
Risk management	15	15	-	0.0%
General & administrative	4	6	2	36.1%
Vehicle/facility leases	314	314	0	0.1%
Administrative Allocation	528	528	0	0.0%
Total Operating Expenses	**$ 19,969**	**$ 20,439**	**$ 470**	**2.3%**
Operating Income (Loss)	**$ (18,373)**	**$ (18,832)**	**$ 460**	**2.4%**
Total Non-Operating Activities	**-**	**-**	**-**	**-**
Income (Loss) before Capital Contributions	**$ (18,373)**	**$ (18,832)**	**$ 460**	**-2.4%**

SAN DIEGO METROPOLITAN TRANSIT SYSTEM

OPERATIONS
CORONADO FERRY

COMPARISON TO BUDGET - FISCAL YEAR 2026
MAY 31, 2026
(in $000's)

	YEAR TO DATE			
	ACTUAL	BUDGET	VARIANCE	VAR. %
Passenger Revenue	$ -	$ -	$ -	-
Other Revenue	-	-	-	-
Total Operating Revenue	**$ -**	**$ -**	**$ -**	**-**
Personnel costs	$ -	$ -	$ -	-
Outside services	271	295	24	8.1%
Materials and supplies	-	-	-	-
Energy	-	-	-	-
Risk management	-	-	-	-
General & administrative	-	-	-	-
Vehicle/facility leases	-	-	-	-
Administrative Allocation	-	-	-	0.0%
Total Operating Expenses	**$ 271**	**$ 295**	**$ 24**	**8.1%**
Operating Income (Loss)	**$ (271)**	**$ (295)**	**$ 24**	**8.1%**
Total Non-Operating Activities	**271**	**295**	**(24)**	**-8.1%**
Income (Loss) before Capital Contributions	**$ -**	**$ -**	**$ -**	**-**

SAN DIEGO METROPOLITAN TRANSIT SYSTEM

ADMINISTRATION
CONSOLIDATED

COMPARISON TO BUDGET - FISCAL YEAR 2026
MAY 31, 2026
(in $000's)

	YEAR TO DATE			
	ACTUAL	BUDGET	VARIANCE	VAR. %
Passenger Revenue	$ -	$ -	$ -	-
Other Revenue	29,561	27,442	2,120	7.7%
Total Operating Revenue	**$ 29,561**	**$ 27,442**	**$ 2,120**	**7.7%**
Personnel costs	$ 32,631	$ 32,803	$ 172	0.5%
Outside services	26,885	28,005	1,120	4.0%
Materials and supplies	70	70	(0)	-0.5%
Energy	1,013	1,107	95	8.5%
Risk management	892	922	29	3.2%
General & administrative	5,520	5,466	(54)	-1.0%
Vehicle/facility leases	587	589	2	0.3%
Administrative Allocation	(38,251)	(38,251)	0	0.0%
Total Operating Expenses	**$ 29,348**	**$ 30,711**	**$ 1,363**	**4.4%**
Operating Income (Loss)	**$ 214**	**$ (3,269)**	**$ 3,483**	**106.5%**
Total Non-Operating Activities	**-**	**-**	**-**	**-**
Income (Loss) before Capital Contributions	**$ 214**	**$ (3,269)**	**$ 3,483**	**-106.5%**

SAN DIEGO METROPOLITAN TRANSIT SYSTEM

OTHER ACTIVITIES
CONSOLIDATED

COMPARISON TO BUDGET - FISCAL YEAR 2026
MAY 31, 2026
(in $000's)

	YEAR TO DATE			
	ACTUAL	BUDGET	VARIANCE	VAR. %
Passenger Revenue	$ -	$ -	$ -	-
Other Revenue	1,156	1,109	47	4.2%
Total Operating Revenue	**$ 1,156**	**$ 1,109**	**$ 47**	**4.2%**
Personnel costs	$ 627	$ 643	$ 16	2.5%
Outside services	527	520	(7)	-1.3%
Materials and supplies	0	0	0	90.7%
Energy	4	6	2	28.1%
Risk management	88	88	(0)	0.0%
General & administrative	58	57	(1)	-2.5%
Vehicle/facility leases	25	26	0	1.2%
Administrative Allocation	33	33	(0)	0.0%
Total Operating Expenses	**$ 1,363**	**$ 1,374**	**$ 11**	**0.8%**
Operating Income (Loss)	**$ (208)**	**$ (265)**	**$ 58**	**21.7%**
Total Non-Operating Activities	**-**	**-**	**-**	**-**
Income (Loss) before Capital Contributions	**$ (208)**	**$ (265)**	**$ 58**	**-21.7%**

Metropolitan Transit System

Agenda Item No. 18

MEETING OF THE SAN DIEGO METROPOLITAN TRANSIT SYSTEM
BOARD OF DIRECTORS

July 30, 2026

SUBJECT:

Purchase of Special Trackwork for the Broadway Wye Improvements – Contract Award

RECOMMENDATION:

That the San Diego Metropolitan Transit System (MTS) Board of Directors authorize the Chief Executive Officer (CEO) to execute MTS Doc. No. L1714.0-26 (in substantially the same format as Attachment A), with Voestalpine Railway Systems Nortrak LLC (Nortrak), for the purchase of Special Trackwork for the Broadway Wye Improvements in the amount of $2,058,158.61 (inclusive of 7.75% CA Sales Tax).

Budget Impact

The total contract cost is estimated to be $2,058,158.61 ($1,091,124.00 plus $148,034.61 sales tax)(Attachment C). The project will be funded Capital Improvement Program (CIP) account 2006121501 Special Trackwork Replacement – Broadway Wye.

DISCUSSION:

The Broadway Wye Improvements Project includes the replacement of four (4) No. 6 turnouts and two (2) diamonds at the Broadway Wye, connecting the Blue Line mainline track from America Plaza to the Green Line mainline track that extends from 12th/Imperial to the main track near Santa Fe Depot. This track and special trackwork have reached the end of their service life and require replacement.

A separate Invitation for Bid (IFB) for the construction phase of the Broadway Wye Improvements Project is planned for Fall 2026, with the construction Notice to Proceed (NTP) expected in late 2027. Instead of waiting for the construction contract to be awarded and having the construction contractor purchase the materials needed for the Broadway Wye Improvements Project, MTS seeks to procure these materials itself in preparation for the award of the construction contract. These types of track material procurements have long lead items, which can take up to a year following the NTP before materials are delivered. Assuming the NTP for procurement is issued in August 2026, material delivery is anticipated in mid-2027.

This approach ensures the materials are delivered in time for the construction phase, avoiding delays and enabling the project to progress efficiently without requiring the construction contractor to wait for materials.

Purchase of Special Trackwork for the Broadway Wye Improvements Procurement

MTS Policy No. 52, "Procurement of Goods and Services", requires a formal competitive process for procurements and service contracts over $150,000.00.

On April 14, 2026, staff issued an IFB. A total of two (2) bids were received by the deadline of June 3, 2026, and are summarized as follows:

Firm Name	Firm Certification	Bid Amount	7.75% Sales Tax	Total Price
Nortrak	N/A	$1,910,124.00	$148,034.61	$2,058,158.61
Progress Rail	N/A	$2,897,993.00	$224,594.46	$3,122,587.46

Staff determined Nortrak to be the lowest responsive and responsible bidder. Based on the bids received, and in comparison with the MTS Independent Cost Estimate (ICE) of $2,337,531.00 (excluding sales tax), staff deemed Nortrak's pricing to be fair and reasonable.

Therefore, staff recommend that the MTS Board of Directors authorize the CEO to execute MTS Doc. No. L1714.0-26 (in substantially the same format as Attachment A), with Nortrak, for the purchase of Special Trackwork for the Broadway Wye Improvements in the amount of $2,058,158.61 (inclusive of 7.75% CA Sales Tax).

/s/ Sharon Cooney
Sharon Cooney
Chief Executive Officer

Key Staff Contact: Julia Tuer, 619.557.4515, Julia.Tuer@sdmts.com

Attachments: A. Draft Agreement, MTS Doc. No. L1714.0-26
B. Scope of Work/Technical Specifications
C. Bid Form

Metropolitan Transit System

STANDARD AGREEMENT

FOR

MTS DOC. NO. L1714.0-26

PURCHASE OF WYE SPECIAL TRACKWORK FOR BROADWAY

THIS AGREEMENT is entered into this _____ day of _____, 2026 in the State of California by and between San Diego Metropolitan Transit System ("MTS"), a California public agency, and the following, hereinafter referred to as "Contractor":

Name: voestalpine Railway Systems Nortrak LLC Address: 1740 Pacific Ave

Cheyenne WY 82007
City State Zip

Form of Business: Corporation
(Corporation, Partnership, Sole Proprietor, etc.)

Email: Linnea.frary@voestalpine.com

Telephone: 206-255-4134

Authorized person to sign contracts Linnea Frary Senior Vice President Sales
Name Title

The Contractor agrees to provide goods as specified in the conformed Scope of Work/Technical Specification (Exhibit A), Contractor's Cost/Pricing Form (Exhibit B), and in accordance with the Standard Agreement, including Standard Conditions (Exhibit C), Federal Requirements (Exhibit D), and Forms (Exhibit E).

The contract term commences upon full execution of the Agreement and concludes 52 weeks thereafter from Notice to Proceed (NTP).

Payment terms shall be net 30 days from invoice date. The total cost of this contract shall not exceed $2,058,158.61 without the express written consent of MTS.

SAN DIEGO METROPOLITAN TRANSIT SYSTEM	VOESTALPINE RAILWAY SYSTEMS NORTRAK LLC
By: _____ Sharon Cooney, Chief Executive Officer	By _____
Approved as to form:	
By: _____ Karen Landers, General Counsel	Title: _____

San Diego Metropolitan Transit System (MTS) is a California public agency comprised of San Diego Transit Corp., San Diego Trolley, Inc. and San Diego and Arizona Eastern Railway Company (nonprofit public benefit corporations). MTS member agencies include the cities of Chula Vista, Coronado, El Cajon, Imperial Beach, La Mesa, Lemon Grove, National City, Poway, San Diego, Santee, and the County of San Diego. MTS is also the For-Hire Vehicle administrator for multiple cities in San Diego County.

SCOPE OF WORK/TECHNICAL SPECIFICATIONS

1. MINIMUM TECHNICAL SPECIFICATIONS

   The comprehensive technical specifications for this project can be found in ATT 2, and the associated drawings are provided in ATT 3.

   Bidders shall review both documents thoroughly to ensure full compliance.

2. TARIFFS

   All quoted pricing should be “EXCLUSIVE” of tariffs. In the event there are tariffs imposed across any items under this contract, the Contractor may request separate payment through the submission of CBP Form 7501 outlining the HTSUS rate (Box 33) and Duty charged (Box 34) for the description (Box 28) and quantity (Box 30 & 31) of the item which should match the MTS Purchase Order particulars.

   Tariff charges may be invoiced under a separate charge to each purchase order once approved by MTS.

3. INVOICES

   Invoices must be sent to the MTS Accounting Department, via email, at ap@sdmts.com. All invoices must have the Purchase Order and contract number clearly displayed to ensure timely payment. MTS will not pay on packing slips, receiving documents, delivery documents, or other similar documents. Invoices must be submitted for payment.

   Payment terms shall be net 30 days from invoice date. If MTS rejects an incorrectly submitted invoice and sends it back for correction, the net 30 days restart from the corrected invoice date.

   Contractors must also indicate if any of the invoiced amount(s) is for service or work provided by a subcontractor and indicate the amount that will be paid to the subcontractor. Contractors must also comply with the prompt payment requirements in the Prompt Progress Payments section of the Standard Conditions.

4. [NOT APPLICABLE] PAYMENT PROCESSING SECURITY AND PAYMENT CARD INDUSTRY (PCI) DATA SECURITY STANDARD (DSS) COMPLIANCE

5. [NOT APPLICABLE] HEWLETT PACKARD ENTERPRISE (HPE) MINIMUM REQUIREMENTS

6. [NOT APPLICABLE] CISCO MINIMUM REQUIREMENTS

7. [NOT APPLICABLE] CONTRACTOR’S INFORMATION SECURITY RESPONSIBILITIES

8. BUY AMERICA

   This scope of work may trigger Buy America and/or Build America Buy America requirements, which apply to construction materials, manufactured products, rolling stock, iron and steel. The below list of definitions and examples is not exhaustive and is only to be used as illustrative and a guidance tool for Contractor compliance.

A. CONSTRUCTION MATERIALS

i. Per Infrastructure Investment and Jobs Act (IIJA) Sec. 70912 (2)(C), all construction materials must be manufactured in the United States. This means that all manufacturing processes for the construction material occurred in the United States.

ii. "Construction materials" **includes** an article, material, or supply that is or consists primarily of:
   a) non-ferrous metals;
   b) plastic and polymer-based products (including polyvinylchloride, composite building materials, and polymers used in fiber optic cables);
   c) glass (including optic glass);
   d) lumber; or
   e) drywall.

   Exception: "Construction Materials" **does not include** an item of primarily iron or steel; a manufactured product; cement and cementitious materials; aggregates such as stone, sand, or gravel; or aggregate binding agents or additives.

iii. According to the Office of Management and Budget (OMB) Initial Implementation Guidance on Application of Buy America Preference in Federal Financial Assistance Programs for Infrastructure M-22-11, April 18, 2022, a Buy America preference only applies to articles, materials, and supplies that are consumed in, incorporated into, or affixed to an infrastructure project. As such, it does not apply to tools, equipment, and supplies, such as temporary scaffolding, brought to the construction site and removed at or before the completion of the infrastructure project. Nor does a Buy America preference apply to equipment and furnishings, such as movable chairs, desks, and portable computers.

B. MANUFACTURED PRODUCT

Per IIJA Section 70912 (2)(B), all manufactured products used in the project must be produced in the United States. Examples for manufactured products provided per Appendix A to 49 CFR 661.3 include: Infrastructure projects not made primarily of steel or iron, including structures (terminals, depots, garages, and bus shelters), ties and ballast; contact rail not made primarily of steel or iron; fare collection systems; computers; information systems; security systems; data processing systems; and mobile lifts, hoists, and elevators.

C. [NOT APPLICABLE] ROLLING STOCK

D. IRON OR STEEL

Per IIJA Section 70912 (2)(A), all iron and steel used in the project must be produced in the United States. This means all manufacturing processes, from the initial melting stage through the application of coatings, occurred in the United States. Examples of iron and steel provided per Appendix A to 49 CFR 661.3 include: Items made primarily of steel or iron such as structures, bridges, and track work, including running rail, contact rail, and turnouts.

9. SAFETY DATA SHEETS (SDS)

Upon award, Contractors shall email the SDS for materials/ chemicals that will be used or stored at the construction site during the duration of the project, attention Ngan Nguyen, MTS

Environmental Health and Safety Specialist at Ngan.Nguyen@sdmts.com for review or comment if needed. The Contractor shall notify the MTS Environmental Health and Safety Specialist if there are changes or updates to the SDS during the term of the contract to ensure the MTS recordkeeping is kept updated throughout the contract. Any disposal of hazardous waste must be communicated to MTS Environmental Health and Safety Specialist for approval prior to disposal.

10. [NOT APPLICABLE] NO RIGHT TO POST SIGNS

11. WARRANTY

    Bidders shall outline in detail their warranty on the equipment offered, including the method of adjustment in cases of equipment, component or parts failure. Warranty shall also be stated for installation labor, materials, and method of adjustment.

12. REPLACEMENT PARTS

    Replacement parts and technical support for the specified equipment must be guaranteed by the manufacturer; to be available for a ten (10) year period from the date of purchase. Manufacturer shall keep parts books and maintenance manuals up-to-date for that period.

13. DELIVERY AND ACCEPTANCE

    All orders must be delivered in a timely manner. MTS has determined that 52 weeks or less from the date of Notice to Proceed (NTP) is a satisfactory time for delivery. All orders must be delivered complete within this time frame unless otherwise approved by MTS.

    Equipment or any deliverable provided under this contract shall be delivered F.O.B. to SDTI, 1341 Commercial Street, San Diego, California 92113 unless otherwise specified, in first class condition, complete and ready for operation, and the Contractor shall assume all responsibility and risk of loss incident to said delivery.

    Contractor shall indicate delivery date on the Bid Form unless already specified, in which case, shall be made within the time set forth. Delivery is part of the consideration and must be adhered to as specified.

    Contractor will not be held liable for failure to make delivery because of strikes, construction of property, governmental regulations, acts of God or any other causes beyond his control, provided a written extension of time is obtained from MTS.

    Upon delivery, MTS will acknowledge receipt of said items or products. Delivery shall not constitute acceptance. Upon inspection and testing (if necessary) by MTS, a determination will be made whether said items or products are in conformance with contract requirements. If found in conformance, MTS shall approve the Contractor’s invoice for payment; thereby constituting acceptance. Payment terms begin from this point. If the delivered items or products are found not in compliance, MTS will immediately notify the Contractor, and furnish all details of deficiencies. Contractor shall correct the deficiencies or supply new items or products (at the discretion of MTS) and resubmit for inspection and testing (if necessary).

14. [NOT APPLICABLE] LIQUIDATED DAMAGES

MTS BROADWAY WYE

SPECIAL TRACKWORK IMPROVEMENTS

TECHNICAL SPECIFICATIONS TABLE OF CONTENTS

IFB Procurement Submittal

DIVISION 34	
34 11 19	Track Rail Joints
34 11 23.13	Ballast Special Track Rail
34 11 33.13	Concrete Track Cross Ties
34 11 36	Track Rail Fasteners
34 42 13.22	Switch and Lock Movement

SECTION 34 11 19
TRACK RAIL JOINTS

PART 1 - GENERAL

1.1 SUMMARY

A. Description:

1. This Section includes requirements for fabricating, delivering, installation, and testing of bonded (“glued”) insulated rail joints for 115 RE head hardened rail specified.
    a. Insulated rail joints that are internal to a special trackwork unit shall be furnished by the special trackwork fabricator as a part of the special trackwork layout.

B. Section Includes:

1. Installers
2. Assembly Preparation
3. Joint Assembly
4. Joint Installation
5. Field Quality Control

1.2 REFERENCE STANDARDS

A. Association of American Railroads (AAR):

1. AAR – Signal Manual Assembly and Testing of Insulating Track Fittings, Part 14.5.1

B. American National Standards Institute (ANSI):

1. ANSI B1.1 – Unified Inch Screw Threads (UN and UNR Tread Form)
2. ANSI B18.2.1 – Square and Hex Bolts and Screws (Inch Series)

C. American Railway Engineering and Maintenance of Way Association (AREMA), Current Edition:

1. AREMA Publication – Manual for Railway Engineering, Chapter 4 Section 3.8 Specification for Bonded Insulated Rail Joints
2. AREMA Portfolio of Trackwork Plans – AREMA Standard Plan No. 1005 – Beveling of Rail Ends for Special Trackwork
3. AREMA Signal Manual Part 14.5.1

D. ASTM International (ASTM):

1. ASTM F3125 – Standard Specification for High Strength Structural Bolts, Steel, and Alloy Steel, Heat Treated, 120 ksi and 150 ksi Minimum Tensile Strength
2. ASTM B633 – Electrodeposited Coatings of Zinc on Iron and Steel Strength
3. ASTM D257 – DC Resistance or Conductance of Insulating Materials
4. ASTM D1002 – Apparent Shear Strength of Single-Lap-Joint Adhesively Bonded Metal Specimens by Tension Loading (Metal-to-Metal)
5. ASTM F436 – Hardened Steel Washers

E. American Society of Mechanical Engineers

1. ASME B18.16.6 – Prevailing Torque Locknuts

F. Steel Structures Painting Council (SSPC):

1. SSPC-SP 10 – Near-White Metal Blast Cleaning

1.3 SUBMITTALS

A. Submittals shall be made in accordance with Section 3.9, “Submittals,” of the Standard Construction Agreement and General Conditions, and shall include the following:

B. Submit the following information:

1. Shop Drawings
   a. Bonded (glued) insulated joints for field fabrication in 115 RE rail.
   b. Shop-fabricated bonded (glued) insulated joint 115 RE rail.
2. Methods and Procedures
   a. Manufacturer’s quality plan for manufacture of bonded (glued) insulated joint components, including adhesive.
   b. Manufacturer’s instructions, including installation methods and procedures for 115 RE rail.
   c. Proposed procedure for positioning insulated and welded joints on concrete crosstie and direct fixation fasteners, where applicable.
3. Qualifications of the selected independent testing laboratory and testing personnel.
4. Test Results:
   a. Test results for bonded (glued) insulated joint testing for 115 RE rail.
   b. Proposed alternate methods of dynamically testing bonded (glued) insulated joints in accordance with Article 2.3A.3 herein.

1.4 QUALITY ASSURANCE

A. Perform laboratory testing as specified herein at the expense of the Contractor and at no additional cost to MTS.

1. Use a certified independent testing laboratory experienced in performing all tests required by this Section to perform, or witness testing and certify the results.

B. Manufacturer Certification: Manufacturer of the insulated joints shall have a quality control program for manufacturing the bonding adhesive used in the bonded insulated joints, including how it is regulated, maintained, and monitored.

C. Before permanently installing bonded insulated joints, prequalify each installation crew and its foreman by testing two samples of bonded joints in accordance with the longitudinal compression test specified herein. Except as allowed in Article 2.3 prepare the test samples in track. Perform the bonded insulated joints tests with two samples using high strength rail.

D. Failure of a test sample disqualifies the responsible foreman or crew for permanent installation Work. Assign a new foreman or crew and repeat procedure and test.

E. Use equipment that is specifically designed to fasten proprietary bolts in bonded (glued) joint installation. Use the same equipment for field installation of bonded (glued) joints and for assembling test samples.

PART 2 - PRODUCTS

2.1 GENERAL

A. Bonded insulated rail joints shall comply with the requirements of the AREMA Manual for Railway Engineering, Chapter 4, Section 3.8, Specification for Bonded Insulation Rail joints, except as modified by this Section.

2.2 BONDED INSULATED JOINTS

A. The following requirements apply to all types of joint bars:

1. Provide joint bars a minimum of 36-inches long, with six (6) holes, shaped to fit 115 RE rail.
2. Locate holes as shown and specified in the AREMA Manual for Railway Engineering, Volume 1, Chapter 4 Rail, Sections 3.2 Joint Bars and Assemblies and 3.3 Rail Drillings, Bar Punchings and Bolts. Deburr the holes after drilling.
3. Provide bolt diameters in accordance with the manufacturer’s requirements according to kit and rail size standards.

B. Bonded (“Glued”) Insulated Joints

1. Furnish bonded (glued) insulated joints complete with joint bars; end posts, bushings, washers, hex head bolts and nuts, and adhesive as recommended by the manufacturer and in accordance with the Association of American Railroads (AAR) Part 14.5.1.
2. Adhesives shall be in accordance with ASTM D1002 Strength Properties of Adhesives (Metal to Metal).

3. Joint Bars: Provide joint bars for bonded (glued) insulated joints that make full face contact with the configuration of 115 RE rail and fabricated from quenched carbon steel as specified in the AREMA Manual for Railway Engineering, Volume 1, Chapter 4 Rail, Section 3.4 Specifications for Quenched Carbon-Steel Joint Bars, Microalloyed Joint Bars and Forged Compromise Joint Bars. The bonded joint bar clearance envelope for 115 RE rail is shown on Figure 34 11 19.13-1.
    a. Provide joint bar lengths within plus or minus 1/8-inch of the dimension shown on the shop drawings.
    b. Ensure that those portions of the joint bars adjacent to the tangent rail are straight to within a tolerance of plus or minus 1/32-inch.
    c. Joint bars to be installed in curved closure rails may be pre-curved to suit turnout radius to eliminate potential tangent characteristics.
    d. Fabricate the inside face of the joint bars smooth with no stamping or branding, and pre-bond the insulating material to the joint bar face.
4. Insulating Materials: Comply with AREMA and meet the electrical testing specified herein.
5. End Posts: Provide 3/I6-inch thick end posts, and do not allow them to project below the base of the rail.
6. Adhesive: Provide adhesive that is within its shelf life at the time of use and has been stored in accordance with the adhesive manufacturer’s recommendations.
7. Rail used in the fabrication of bonded insulated joint plugs shall be high strength rail complying with Section 34 11 13, “Track Rails”.
8. Bolts: Fasten glued insulated joints together with six (6) hex head bolts that meet the chemical composition and mechanical property requirements of ANSI B1.1 and B.18.2.1, ASTM F3125 and ASME B18.16.6, as applicable.
    a. Bolt tension: As specified by the manufacturer.
    b. Provide bolt hole sizes in accordance with the glued (bonded) insulated joint manufacturer’s recommendation.
    c. If a bolt hole diameter is larger than 13/16-inches, place ASTM F436 hardened washers between the joint bars and bolt head and nut.
    d. Bolts, nuts and washers to be coated in accordance with ASTM B633
    e. “Pin bolts” are not permitted.

2.3 SOURCE QUALITY CONTROL

A. Bonded (“glued”) Insulated Joint Qualification Testing Requirements:

1. Do not begin testing before shop drawings and installation procedures have been reviewed by the Engineer.
2. Test three bonded (glued) insulated joints.
    a. Test two (2) glued insulated joints as specified in Article 2.3B herein.

b. Test the remaining glued insulated joint as specified in Articles 2.3C, 2.3D, 2.3E, and 2.03F herein.

3. Other methods of testing the joint dynamically may be submitted to the Engineer for review.

4. Should the joint assembly fail to meet the requirements of this Article, the insulated joint design will not be accepted.

B. Longitudinal Compression Test: Comply with AREMA.

C. Electrical Resistance Test: Comply with AREMA and ASTM D257.

D. Electrical Impedance Test:

1. Electrical Impedance Test Procedure:

a. Apply a potential of 50 volts (AC) to the rail across the joint.

b. Increase the frequency from 20 hertz to 10 kilohertz in ten (10) equal increments and hold each frequency for three (3) minutes.

c. Measure the impedance after three (3) minutes for each frequency increment with an accuracy of plus or minus 2-percent and record the impedance for each frequency in accordance with ASTM D257 and AREMA Signal Manual Part 14.5.1.

2. Acceptance Criteria:

a. The minimum impedance for frequencies between 20 Hz and 10 KHz with 50 volts AC shall be 10,000 ohms.

E. High-Potential Test: Comply with AREMA.

F. Dynamic Testing: Comply with AREMA Rolling Load Test.

G. Additional Follow Up Testing: The same bonded (“glued”) joint that has passed the electrical resistance test, electrical impedance test, and dynamic testing shall be submitted to the follow up testing as citied below:

1. Follow-up Testing Procedure:

a. Repeat the electrical resistance and impedance tests specified in Article 2.3C and Article 2.3D herein.

b. After completion of the electrical resistance and impedance tests, subject the joint assembly to the longitudinal, compression test as specified in Article 2.3B herein.

1) Saw cut the joint as specified to adapt the section to the requirements stated in the test.

2. Acceptance Criteria:
    a. The test results of the follow-up tests shall be within the acceptance criteria specified for each of those tests discussed in Article 2.3 herein.

PART 3 - EXECUTION

3.1 INSTALLERS

A. Crew Qualifications:
1. Before fabricating bonded (“glued”) joints, each crew performing such work must be pre-qualified.
2. Pre-qualify each crew and its foreman by testing two samples of bonded (“glued”) joints fabricated by the crew.
    a. For field installation crews, fabricate the joints in track to simulate actual joint installation, and then cut the joints out of the track.
    b. Test the joints in accordance with one (1) the high-potential test specified in Article 2.3E herein, and then two (2) longitudinal compression test specified in Article 2.3B herein.
3. Failure of a test sample disqualifies the foreman and, at the discretion of the Engineer, the entire crew, or crewmembers.
    a. If foreman or crew personnel are disqualified, assign a new foreman and crew personnel and repeat the qualification procedure.
4. Acceptance of a crew’s previous qualifications for fabrication of bonded insulated rail joints is at the discretion of the Engineer.
5. Crews used to manufacture shop-fabricated insulated joint plug rails shall comply with the same pre-qualification requirements as field crews.

3.2 ASSEMBLY PREPARATION

A. Calibrate bolt-tightening equipment.

B. Provide holes in the rail to match joint bars as required.

C. All insulated joints shall be fabricated with high strength rail. End hardening is not required.

D. Bevel rail ends as shown on AREMA Standard Plan No. 1005 - Beveling of Rail Ends for Special Trackwork.

E. Clean the end 21 inches of the web, bottom of head, and top of base of each rail of upset branding, foreign materials, loose rust, and scale to near white metal in accordance with SSPC-SP 10.
1. Grind all raised mill marking within the 21-inch distance flush with the web.

3.3 JOINT ASSEMBLY

A. Prepare rail ends as described in Article 3.2 herein.

B. Install bonded (“glued”) joints in accordance with the manufacturer’s instructions and the following:

1. Alternate the direction of bolt insertion.
2. Ensure that there is no contact between joint bars and bolts.

3.4 JOINT INSTALLATION

A. Install bonded (“glued”) insulated joints at the locations as specified on the contract drawings.

1. Ensure that the center of the joint is approximately centered between rail supports.
2. Modified design clips shall be used at insulated joint locations to prevent contact between insulated joint bars and rail fasteners.

B. Insulated Joint Plug rails shall be installed in CWR in accordance with Section 34 11 16.19, “Thermite-Welded Track Rail”.

3.5 FIELD QUALITY CONTROL

A. Once the bonded insulated joint has been installed in track, test the resistivity across the insulating components of the joint to verify that the AREMA acceptance criteria cited by reference of Article 2.3C herein, are met.

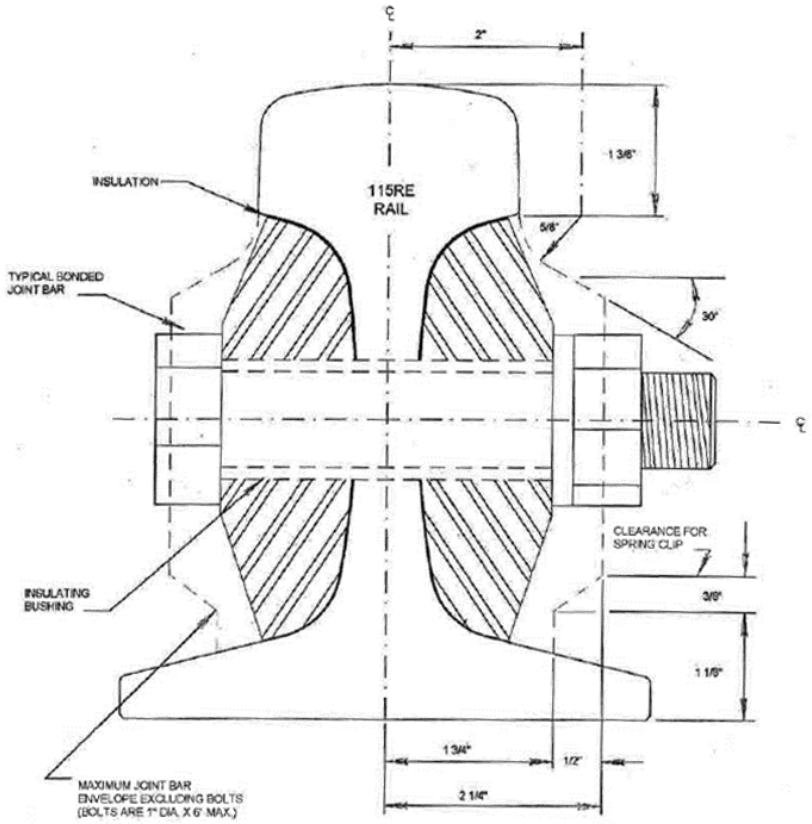

Figure 34 11 19.13-1
Bonded Joint Bar Clearance Envelope

PART 4 - MEASUREMENT AND PAYMENT

4.1 MEASUREMENT

A. No separate measurement will be made for furnishing track rail joints.

4.2 PAYMENT

A. Full compensation for furnishing track rail joints shall be considered as included in the contract price paid per unit for “Procure No. 6 Turnout with Concrete Ties”, and “Procure Steel Crossing with Concrete Ties,” therefore no separate payment will be made.

END OF SECTION

SECTION 34 11 23.13
BALLAST SPECIAL TRACK RAIL

PART 1 - GENERAL

1.1 SUMMARY

A. Description:

1. Furnish ballasted and ballasted embedded special trackwork with concrete switch ties, as specified.
2. Provide the materials for fabrication, testing, shipping, delivery, unloading, and placing into storage of ballasted special trackwork at the Contractor's (or MTS's) site/material storage yard.

B. Section Includes:

1. Interface with Other Work.
2. Maintenance Manuals.

C. Products Supplied but not Installed Under this Section:

1. Turnoutsand Steel Crossings to be installed by Contract under the provisions of Section 34 72 13.10, "Special Trackwork Construction."
2. Spare parts for turnouts, and crossover to be turned over to MTS for future maintenance.

1.2 REFERENCE STANDARDS

A. American National Standards Institute (ANSI):

1. ANSI B18.2.1 – Square and Hex Bolts and Screws Inch Series
2. ANSI B18.21.1 – Lock Washers
3. ANSI B18.22.1 – Plain Washers

B. American Railway Engineering and Maintenance-of-Way Association (AREMA), Current Edition (unless noted otherwise):

1. AREMA Publication – Manual for Railway Engineering, Chapter 4, Rail
2. AREMA Publication Portfolio of Specifications and Trackwork Plans

C. ASTM International (ASTM):

1. ASTM D257 – Standard Test Methods for D-C Resistance or Conductance of Insulating Materials
2. ASTM D1248 – Standard Specification for Polyethylene Plastics Extrusion Materials for Wire and Cable

3. ASTM D2240 – Standard Test Method for Rubber Property - Durometer Hardness
4. ASTM E10 – Standard Test Method for Brinell Hardness of Metallic Materials
5. ASTM E94 – Standard Guide for Radiographic Examination Using Industrial Radiographic Film

D. American Welding Society (AWS):

1. AWS D1.1 – Structural Welding Code - Structural Steel

E. National Electrical Manufacturer's Association (NEMA):

1. NEMA LI-1 – Industrial Laminating Thermosetting Products

1.3 DESIGN REQUIREMENTS

A. Special Trackwork Materials and Assemblies: Conform to both the AREMA Manual for Railway Engineering and AREMA Portfolio of Trackwork Plans, where applicable. Refer to Contract Drawings for details.

B. Develop all required details not otherwise delineated on the Contract Drawings in accordance with these Specifications and standard practice.

1. Design all special trackwork to accommodate the proposed wheel contour, wheel diameter, wheel gauge, and axle spacing per MTS Standards.
2. Concrete Switch Tie Layouts:
   a. Develop detailed concrete turnout tie layouts to support the special trackwork in ballasted and ballasted embedded track.
   b. Indicate the tie identity and the exact location and length of each tie, and comply with the following criteria:
      1) Space ties according to the general spacing shown on the Contract Plans.
      2) Design the rail lengths and switch tie layouts to avoid placing a crosstie and fastener within six (6) inches of either the end post of an insulated joint position or the center of a field thermite weld.
      3) Standard crossties beyond last long concrete switch tie shall not be interlaced. Use standard concrete crosstie (length assumed to be 8-feet 3-inches) to determine the length of and design the last long switch tie.
         a) Crossties beyond the frog may be shortened on the end where they abut adjoining ties to reduce the number of long switch ties.
         b) If such reduced-length ties are used, they shall be furnished as part of the switch tie set and shall be designed and approved by the switch tie manufacturer. Reduced-length ties shall pass the rail seat positive and bending moment test specified in Section 34 11 33.13, Concrete Track Crossties.
         c) In no case shall the distance from the running rail gauge line to the end of the tie be reduced below 21-1/4 inches.

4) Limit use of concrete crossties longer than 17-feet 6-inches to the maximum degree possible, except in crossovers.

5) Single crossover tracks will require concrete switch ties with lengths in the range of 22-feet 6-inches to 24-feet 6-inches in the zone adjacent to the turnout frogs. It is preferred that these extra-long concrete switch ties be furnished with mechanical splices to maintain gauge. Splices shall be located on the tops of the ties to permit routine inspection. Splices shall be readily disconnected or removed for surfacing or tie replacement on one track with minimal outage on the adjoining track. Splice shall be hinged to minimize bending moments on the connected ties. Show proposed alternative arrangement on Contract Shop Drawings.

6) Design the concrete turnout switch tie layout to facilitate future maintenance.

7) Design the layout so it is not necessary to remove more than one extra switch tie to replace defective switch ties.

8) Detail concrete switch tie lengths so that no ties will have an embedded shoulder or plate anchor bolt insert positioned to proven industry standards located within 12-inches of the end of the tie, except at locations specified to accommodate flexible tie splice.

1.4 SUBMITTALS

A. Submittals shall conform Section 3.9, “Submittals,” of the Standard Construction Agreement and General Conditions.

B. Submit the following information, except as modified herein:

1. Turnout, and Crossover layouts with switch tie positioning beneath component and complete bill of materials, in accordance with the specific component identification number.

2. Detailed shop drawing for the diamond crossings with tie positioning beneath component and complete bill of materials, in accordance with the specific component identification number.

3. Detailed Shop Drawings for all components listed including, but not limited to, switches, turnout frogs, closure rails, guard rails, rail fastening plates, switch ties, switch stands or powered switch machine, or as specified, and all other items required for complete and operable special trackwork installation.

4. Complete layout plans and fabrication detail plans, including rail bending diagrams, for each item of special trackwork.

a. Provide Shop Drawing layouts with sufficient identification detail to give the installation contractor sufficient information to assemble the special trackwork unit using the information available on the Shop Drawings and the centerline stakeout without requiring additional surveying or calculations.

1) In turnout and crossover layouts, provide sufficient rail length and switch tie detail for each arrangement to show precise connecting rail lengths between adjacent turnouts and precise tie arrangements.

2) Provide a list of turnout switch ties for each individual arrangement.

3) Show the location and orientation of all fastenings and other small parts, and number key them to the Shop Drawings.

4) When actual layout dimensions, as measured during shop assembly, differ from the design values, and these values are accepted by the Engineer, show these as-built dimensions on the revised final Shop Drawings shipped with the material.

5. Working Drawings:

a. Submit methods of unloading and stacking materials (consider storage site space is limited) 30 days before the scheduled date of the first delivery.

b. Submit written description indicating how each special trackwork unit will be broken down for shipment, and the packaging of each special trackwork loose item required for assembly into the complete item.

c. Submit scaled working drawings of all arrangements. Each layout shall demonstrate that:

1) Switch ties do not conflict with switch machines, crossties, crossing ties or special trackwork ties on tightly-spaced adjoining tracks. If conflicts do arise, adjust tie arrangements to resolve site-specific conflicts and furnish whatever custom ties are needed, at no additional cost to MTS. Submit shop drawings of the customized ties for approval by the Engineer and for later procurement of replacement material.

2) Rails are furnished at appropriate lengths within the assembly to minimize the cutting and re-welding of short rail pieces.

6. Test and Inspection Reports:

a. Forward all reports of tests and inspections required by this Section directly from the independent testing laboratory to the Engineer.

C. Submit the qualifications of the certified testing laboratory.

D. Submit a notice of intent to complete shop pre-assembling the special trackwork not less than 14 days before the scheduled inspection date.

1.5 SPARE MATERIALS

A. For emergency stand-by stock, provide the following quantities of special trackwork spare parts:

1. Switch Point Rails:

a. Four pairs of 13-foot switch points and matching stock rails for right-hand switch.

B. The stock rails required in Article 1.8.A.1 herein, shall be supplied with rail arm extensions longer by a length equal to one tie crib spacing so that existing thermite weld locations to be cut out may be repositioned when the existing component is removed.

C. For ease of replacement of the original components, all spare part components must have identical base outline to the original components and fit the rail attachments and the rail clip/plate footprint.

D. Non-rusting primer prior to storage and attach a permanent identification device such as a stainless steel plate and indicate type of identification device and component identification on the shop drawings for future reference.

1.6 QUALITY ASSURANCE

A. Provide only new special trackwork materials for the Contract.

B. Elastic spring clips used during shop assembly shall not be the same clips shipped with the layout. Clips shipped with the layout shall be new. The fabricator may use either new or fit reclaimed clips during shop assembly at his discretion.

C. Shop assembly and inspection:

1. Switch Assemblies:
   a. Fully assemble each switch with switch machine to confirm proper throw with switch point/stock rail mating, proper switch point stop height, proper heel block assembly, and heel of switch spread.
   b. Check for proper switch point mating to stock rails. Minimum shall be a 60-percent contact between switch point machined surface and stock rail. Check using 0.030-inch feeler gage to delineate gaps. Maximum allowable gap at any location shall be 0.09-inches.
   c. Switch point and stock rail assemblies shall be transported bolted, banded and, if necessary “c” clamped together as one piece for protection of switch point geometry.
2. Steel Crossing Assemblies:
   a. Fully assemble each diamond
3. After inspection and acceptance, dismantle components for shipment, unloading, placing into storage, and subsequent reassembly in the field by an installation contractor.
4. Keep the special trackwork items preassembled to the maximum extent feasible for handling, shipment, and storage.

D. The Engineer’s Inspection:

1. The Engineer may elect to inspect the shop assembled special trackwork.
2. The Engineer’s inspection will be undertaken as noted in Article 2.5B.3.

E. After weld repairs have been made to defective items, have an independent testing organization, re-inspect the repaired areas of the items in accordance with ASTM E94 to determine the acceptability of the items.

F. Use an independent and certified testing laboratory experienced in performing all tests required by this Section to perform or witness testing and certify the results.

1.7 DELIVERY, STORAGE, AND HANDLING

A. Once a fully assembled special trackwork item has been inspected and accepted for shipment in accordance with Article 2.5B herein, dismantle it only to the level necessary to permit shipment of the item.

1. Transport shop-curved rail in preassembled sections together to the maximum degree feasible for transportation.
2. Retain all tie plates affixed to the ties for shipping and final installation.

B. Crate each turnout's items (except elastic/spring clips) for shipment as shown on accepted working drawings and ship them with other parts of the same assembly.

1. Securely crate or palletize loose items such as new elastic/spring rail clips, insulators, rail parts, braces, and other similar items; and identify them by crossover number, and then ship them together with the layout drawing to which they belong.
2. Wedge and block rails as required to prevent accidental bending of the rail.

C. Package all parts or packing boxes so that they are capable of being handled by a 20-kip capacity forklift.

1. Load, transport, unload, store, and handle special trackwork components to prevent damage or loss from handling and the elements including adverse sea and weather conditions.

D. Deliver the special trackwork to the material storage yard. Load, unload, handle, and store special trackwork components by accepted methods to prevent kinking, bending, nicking, or otherwise damaging the parts.

1. In unloading operations, do not drop special trackwork components but place each length of rail with the head up and with sufficient support under the base.
2. Do not subject individual components and rail bundles to excessive static loading.
3. Avoid sudden impact or dynamic loading and prevent high stressing arising from point or line loading.

E. During special trackwork component handling operations using cranes, support each component or bundle of rails at two or more slinging points along the length of the part.

1. Spanner beam is a requirement.
2. Single point slinging of parts is prohibited.
3. Avoid excess cantilevering of the component end beyond the slinging points to prevent permanent bending and excessive stressing of the part.
4. Locate slinging points at uniform distances along the load so that components are always supported in a horizontal position.
5. Use only slings that do not cause surface damage or notching.

a. Terylene or nylon strapping is recommended, with an additional sleeve where the sling is in contact with the rail or component.

b. Flat profile chain link slings having a protective sleeve are also recommended.

6. Do not use chains and wires that may cause surface damage.

F. Always use sufficient timber dunnage and take particular care when extracting slings from around component lifts in order to ensure they are not “ripped out.”

G. Place into storage special trackwork components by each individual segment and identity mark.

H. Load, deliver, unload, and place special trackwork together at MTS’s material storage yard, unless indicated otherwise, and place material for the same crossover in the same tier.

1.8 WARRANTY

A. Provide a manufacturer’s warranty as follows for crossover design, fabrication, and materials:

1. Provide an unconditional warranty for replacement of defective switches, including both replacement materials and the labor and equipment associated with removal of the defective switch and installation of its replacement. Warranty shall extend for three (3) years after delivery and acceptance of the final turnout unit on this Contract.
2. Warranties from third-party contractors will be accepted only if also accepted and endorsed in writing by the Contractor and subcontractors.

PART 2 - PRODUCTS

2.1 MATERIALS

A. Special Trackwork Materials and Assemblies: Conform to the AREMA Manual for Railway Engineering and AREMA Portfolio of Trackwork Plans, where applicable.

B. Grease (for lubricating moving parts in turnouts and other trackwork): EM Kronoplate grease or accepted equal. Slide surfaces to be greased on turnouts before inspection and ten (10) gallons to be furnished for field application.

2.2 COMPONENTSU*

Special Trackwork ID	Source	Direction	Frog	Switch	Switch Stand	Ties
Turnout 139	New	RH	#6 RBM	13’-0” Curved	Powered	Concrete

Turnout 141	New	RH	#6 RBM	13’-0” Curved	Powered	Concrete
Diamond Crossing	New	N/A	#6 WBM	N/A	N/A	Concrete
Turnout 131	New	RH	#6 WBM	13’-0” Curved	Powered	Concrete/ Partially Embedded
Turnout 133	New	RH	#6 WBM	13’-0” Curved	Powered	Concrete/ Partially Embedded
Diamond Crossing	New	N/A	#6 WBM	N/A	N/A	Concrete/ Embedded

A. Turnout units shall include switch points, concrete switch ties, stock rails, lead rails, closure rails, complete frogs, guard rails, tie plates, rail clips, switch plates, frog plates, insulated joints, powered switches, and other components as needed for a complete installation and fully functional crossover.

B. Running and Restraining Rail:

1. Fabricate special trackwork running rail from new High Strength rail conforming to Section 34 11 13, “Track Rails”.
2. Provide 115 RE section running rail, unless otherwise noted.
3. Fabricate rails needing to be curved according to Article 2.4F herein.

C. Concrete turnout ties: In accordance with Section 34 11 33.13, “Concrete Track Cross Ties”.

D. Switch Point Rails:

1. Furnish both switch point rails having undercut design in accordance with AREMA Plan Number 221, Detail 5100, except furnish all curved switch point rails with manganese tip in accordance with AREMA Plan Number 220.
2. Length:
   a. Lateral turnout switch points: Furnish 13-foot curved split type with uniform risers in accordance with AREMA Plan Number 123-08 where specified.
3. Reinforcing bars:
   a. Furnish 1/2-inch and 1 1/4-inch-thick reinforcing bars, drilled and assembled to the switch point rails by square head bolts and hex nuts.
   b. All bolts and connections shall be in accordance with:

1) ANSI B18.2.1 for Square and Hex Bolts and Screws
2) ANSI B18.21.1 for Lock Washers
3) ANSI B18.22.1 for Plain Washers

c. Pin bolt assembly is not acceptable.

E. Stock Rails:

1. Length: As determined by in-track position to suit installation and as marked on the shop drawings.
2. Stagger stock rails leads as shown on the Contract Drawings.
3. Undercut stock rails in accordance with AREMA Plan Numbers 121 and 221, Detail 5100.
4. Bend stock rails in accordance with AREMA Plan Number 124 and provide the bending tolerances on shop drawings.

F. Heel Blocks:

1. Heel block Assemblies shall standard bolted and fabricated in accordance with AREMA 221-12.
   a. The preferred material for switch heel blocks for all turnouts is cast steel, Class B.
   b. Acceptable alternate materials for switch heel blocks are gray cast steel, Class 50 according to AREMA Specification M4.2.2, or a fabricated steel heel block assembly.

G. Rail Braces and Slide Plates:

1. Furnish Type A rail braces and slide plates as shown on AREMA Plan Number 224, except modified to permit use of the Pandrol “Boltless Brace” and having round holes to permit attachment to concrete ties by using insulated anchor bolt assemblies.
2. Width of All Plates: 7 1/2 to 8-inches to suit tie width with protruding insulating switch plate pads. Pads shall not project beyond the edges of the concrete switch tie.
3. Plain Slide Plates: Furnish according to AREMA Plan Number 223, Detail 7021, except mounting holes drilled for anchor bolts.
4. Shoulder Heel Plates: Furnish according to AREMA Plan Basic Number 223, Detail 7040 or 7049.

H. Gauge Plates:

1. Required in switches to accommodate end-butted extension plates to switch machines. Details shall be shown on shop drawings and assembly drawings.
2. Alternate design would require fastener nearest switch machine to extend and accommodate end butted extension plate to switch machine.

I. Switch Rods:

1. Furnish vertical switch rods with dimensions of 1 1/4-inches by 2 1/2-inches and of sufficient length so that all switch rods extend under the stock rails in either thrown position.
   a. Provide a minimum clearance between the top of the switch rods and the underside of the stock rail of 1/16-inches and a maximum clearance of 3/16-inches.
   b. Equip No. 1 rod with an insulated adjustment basket in accordance with AREMA Manual of Recommended Practice – Signals, Drawing Number 1274A, or accepted equivalent.
   c. All switches will be powered unless specified otherwise.
2. Switch Clips:
   a. As shown on the Contract Plans or accepted equal.
3. Switch Rod Insulation:
   a. Insulate all switch rods in accordance with NEMA LI-1 Specification.
   b. Before assembling a switch rod insulated basket joint or straight rod joint, clean mating surface and ends of switch rods, steel channel, and steel splice plates along with fiber plates of all foreign material, and coat those surfaces and ends with General Electric Company Red Glyptal Number 1201 or approved equal.
   c. After assembling a switch rod insulated joint, coat the entire insulated basket connection and joint assembly with General Electric Company Red Glyptal Number 1201 insulation enamel, or accepted equal, in accordance with paint manufacturer's printed instructions. Basket assembly with provided drain holes shall be mounted with holes on the underside.

J. Tie Plates:

1. Provide an insulated switch, frog and guard rail plate design for concrete turnout tie and ballast special trackwork installation.
2. Furnish insulated switch, frog, and guard rail plates as shown on the Contract Drawings and as follows:
   a. Furnish plates (no cant) consisting of adjustable rail braces and spring clips.
   b. Furnish flat plates (no cant) with welded shoulder design for spring clip and in switch area plates to uniform switch design.
   c. Drill a minimum of four holes in each plate for insulated mounting bolt assembly.
      1) Drill holes in plate; punched holes are not allowed.
      2) To protect nylon insulated collar thimble, grind the surfaces of drilled holes in plates to remove all burrs and sharp edges.
      3) Furnish elastic spring clips (e.g., Pandrol "e" clips) as part of the switch plate.
      4) Furnish right-hand mounting elastic spring clips.

5) Provide rail clips of a boltless, threadless, elastic design, which permit removal of the rail, switch, or frog without removal of plate holding anchor bolts.

K. Insulated Tie Plate Pad:

1. Provide 3/16-inch-thick high-density polyethylene (HDP) pads, matt finish, to provide an additional insulating surface between the base of the fastener and the concrete surface.

a. The shape, size, and configuration of the pads shall conform in general to the overall configuration of the fastener and consider lateral adjustment.

b. Insulating pads shall have circular holes for anchor bolts, no larger than 1 inch in diameter.

c. Size the pads so that they project out from under the fastener by 3/8-inch, minimum, on all sides, under all position of fastener lateral adjustment.

2. Design the pads so that installation requires the removal of the fastener body.

a. Incorporate a positive means of preventing the pads from displacement under operating conditions in the design.

3. Furnish pads of high-density polyethylene meeting the requirements of ASTM D1248, Types III or IV, Grades W8 or W9; and conforming to the physical properties listed in Table 134 11 23.13-1.

Table 134 11 23.13-1
High Density Polyethylene Tests

PROPERTIES	UNITS	ASTM TEST METHOD	ACCEPTANCE CRITERIA
Color			Blue
Density	Grams/cm^3	D1505	0.941 to 0.965
Environmental Stress Cracking		D1693	<1 to >1000
Vicat Softening Temperature	ºF	D1525	235 to 260
Brittleness Temperature	ºF	D746	< -180 to -100
Impact Strength	Ft. – Lbs. Inch Notch	D256	0.8 to 14
Tensile Strength 20 Inches/Minute 2 Inches/Minute	 Psi Psi	 D638 D638	 2,600 and 4,800 3,500 and 4,700
Elongation 20 Inches/Minute 2 Inches/Minute	 Percent Percent	 D638 D638	 12 to 700 128 to 860
Heat Distortion Temperature at 66 psi	ºF	D648	160 to 170
Coefficient of Linear Expansion	Inches/Inch/ ºC	D695	1.3 X 10^{-4}
Hardness	Shore D Scale	D2240	55 to 70
Modulus of Elasticity	Psi	D638	60m to 150m

Table 134 11 23.13-1
High Density Polyethylene Tests

PROPERTIES	UNITS	ASTM TEST METHOD	ACCEPTANCE CRITERIA
Compressive Stress at 1 Percent Offset	Psi	D695	3,200 to 3,600
Dielectric Constant 100 kc 1 mc		 D1531 D1531	 2.32 2.32
Dissipation Factor 100 kc 1 mc		 D1531 D1531	 <0.0001 <0.0001
Dielectric Strength, 1/8-Inch Thick	Volts/mil	D149	500
Volume Resistivity	Ohm- cm	D257	>6 X 10^{15}

L. Turnout Frog No. 6:

1. A railbound manganese steel frog conforming to AREMA Plan Number 622-09, heavy-wall design, shall be utilized where specified on the contract drawings.
2. Manganese steel shall conform to the AREMA “Specifications for Special Trackwork” Section M2, “Manganese Steel Castings.” The impact areas of the frogs shall be depth hardened in accordance with Article M2.7, “Depth Hardening”. The points shall be depressed in accordance with AREMA Plan No. 600-18.
3. Impact areas on the running surface of the frogs shall be depth hardened, in accordance with the AREMA Specification for Special Trackwork, to a minimum surface Brinell Hardness Number (BHN) of 350.
4. The complete frog with extended toe and heel arms, if specified, to the approximate lengths shown on the contract drawings shall be cast and rolled rail steel to allow frogs to be installed in track by thermite weld process. The hardness shall match the hardness of the adjoining section throughout the arm length.
5. Running surfaces and gauge surfaces shall be machined to conform to the section of the connection rolled rail.

M. Steel Crossing:

1. Provide concept, design, and fabrication methods for crossing diamond frogs conforming to the general configuration shown on the Contract Drawings conforming to AREMA Plan Number 775-02 modified to conform to a welded boltless solid manganese design.
   a. The steel frog fabricated shall consist of one assembled piece providing a continuous top of rail running surface with zero gap connections, where specified.

b. The complete frogs with extended toe and heel arms to the approximate lengths shown on the contract drawings and AREMA Standards shall be cast and rolled rail steel.

c. Alternative methods of frog fabrication will be considered and evaluated based on whether the method is capable of furnishing the finished product consistent with that shown.

d. The Engineer has the final decision regarding acceptance of alternate designs and methods of fabrication.

2. The complete steel crossing impact areas on the running surface shall be depth hardened, in accordance with the AREMA Specification for Special Trackwork, to a minimum surface Brinell Hardness Number (BHN) of 350.

3. To improve the wheel to frog interface, cast or machine the running surfaces of the frog to simulate the top of rail head profile; and fabricate the rail heads to project 1/4-inch above the surrounding depressed frog surface to provide clearance for false wheel flanges and facilitate future rail head grinding. Frog running surface rail head profile shall match the abutting non-canted rail arms.

4. Recess the toe of the casting or steel mono-block frog body to provide clearance for application of a rail clip connection.

a. Provide a base of rail profile similar to the 115 RE rail base configuration to conform to the 115 RE rail's rail clip connection to the frog plates.

5. Provide component heights matching the 6 5/8-inch height of 115 RE rail.

6. Cross-Section Dimensions:

a. For manganese steel castings, do not provide thickness of metal less than those indicated for "Heavy Wall" construction as shown on AREMA Drawing 621.

b. For solid cast manganese steel castings, do not provide thickness of metal less than the dimensions indicated on AREMA Drawings 641 and 671.

N. Frog Guard Rail and Appurtenances:

1. Guard rails for No. 6 turnout frog shall as specified on the contract drawings. Guard rails shall be fabricated in accordance with AREMA Plan No. 504-03 and shall be made of carbon steel with Brinell Hardness and chemical composition at least equal to that of the running rail.

2. Guard rails shall be located relative to the frog wing rail flare in accordance with AREMA Plan No. 502-13 and the standard gauge of 56 1/2-inches shall be maintained.

O. Flangeways:

1. Flangeway width (nominal): 1 7/8-inches and as required to accommodate the wheel profiles and truck characteristics.

a. Provide a standard 1 7/8-inch deep flangeway groove as the basic flangeway.

P. Rail Joints:

1. All rail joints within special trackwork rail joints shall be Thermite type field welded, except at bonded insulated joints and bolted switch point rail heel blocks.
2. Insulated Joints:
   a. Provide bonded insulated joints in accordance with Section 34 11 19, “Track Rail Joints”.
   b. Drill holes to the drilling standard to accommodate a 3/16-inch bonded insulated end post provided with bonded insulated joint kits.
   c. Drilled Bolt Holes: Size to conform to insulated joint thimbles and diameter of bolts, and grind rail web to remove sharp edges.
3. Bolted Rail Joints:
   a. Rail End Beveling: In accordance with AREMA Standard Plan Number 1005.
   b. Rail End Drilling: In accordance with AREMA Specification 100 Rail Drillings Bar Punching and Track Bolts for 115 RE rail section.

Q. Powered Switch Machines

1. Refer to Section 34 42 13.22, Switch and Lock Movement for switch machine requirements.

2.3 MANUFACTURED UNITS: TIES AT SWITCH MACHINES

A. Coordinate the design of the head block ties with specific powered switch machines to be furnished to set anchor bolt insert locations and tie recessed depth.

B. Coordinate design of the throw rods with switch machine position on ties and basket position on the No. 1 switch rod for length and possible offset bend.

2.4 FABRICATION

A. Fabricate ballasted special trackwork in accordance with specified requirements and accepted Shop Drawings.

B. Tolerances: Fabricate ballasted special trackwork to allowable tolerances in accordance with AREMA Specifications for Special Trackwork as modified below:

1. Length tolerances:
   a. Switches and Frogs: Plus or minus 1/8-inch.
   b. Turnout Lead Distance: Plus or minus 1/4-inch.
   c. Overall component lengths up to 164-feet long: Plus or minus 1/2-inch.
   d. Overall component lengths between 164-feet to 328-feet long: Plus or minus 1 1/4-inches.
   e. Switch Point Rail Lengths: Plus or minus 1/8-inch.
2. Tolerances for expanding measurements (allowance for thermal movement):
   a. In Switches: Plus or minus 1/16-inch.

b. In Frogs: Plus or minus 1/8-inch.

3. Gauge tolerance: Minus 1/16-inch, plus 1/8-inch.
4. Tolerances for grooves/flangeways:
   a. Width: Plus 3/32-inch, minus zero.
   b. Depth: In accordance with AREMA.
5. Tolerances for drilled holes in rail and punching in joint bars:
   a. Diameter: Plus or minus 1/32-inch.
   b. Spacing and height: Plus or minus 1/32-inch.
6. Tolerances for machining frogs and switch point rails: Machine surfaces and gauge surfaces to conform to the section of the connecting rolled rail.
7. Tolerances for shop-welded joints:
   a. General requirement: Weld true to line with all extraneous metal removed.
   b. Horizontal offsets: Not to exceed 1/16-inch in the head and 1/8-inch in the base.
   c. Surface misalignment:
      1) Combined vertical offset and crown camber: Not to exceed 1/32 inches per foot.
      2) Combined vertical offset and dip camber: Not to exceed 1/16 inches per foot.
      3) Gauge misalignment tolerance (combined horizontal offset and horizontal kink camber): Not to exceed 1/32 inches per foot.
8. Tolerances for switch point rail mating: Machined to maintain full contact with mating stock rails with a tolerance plus 1/16-inch (maximum gap) for less than 20-percent of the machined point surface.

C. Running Surface Finish:

1. Regardless of fabrication method, materials used for all running rail surfaces, including frog running surfaces and all rails within special trackwork units, must have smooth ground surface to eliminate all mill scale and other surface impurities.
   a. All rail shall have the rail head top and side surfaces' finish ground smooth to remove all mill scale and manufacture residue.
   b. Grind head of rail to match the existing curved rail head contour and finish to a smooth light grinding pattern.
   c. Remove a minimum of 0.025-inch. If mill rail fabrication residue exceeds this depth, grind to establish a clean finished surface without distorting rail head profile.

D. Running Surface Hardness: Regardless of construction, the materials used on all running surfaces of frogs, as well as all rails within special trackwork units, shall meet the hardness requirements below. Work hardening under traffic will not be considered in determining compliance with this requirement.

1. Running surface areas are defined as:
   a. The immediate rail head profile areas within 2 3/4-inches of the gauge lines, and
   b. The gauge side of special trackwork items on the “high” side of a curve down to an elevation 1-inch below top of the wheel tread bearing surface.
2. Explosive depth harden manganese steel castings in accordance with the AREMA Specifications for Special Trackwork, Article M2.7, except that the minimum Brinell Hardness Number (BHN) shall be 350 BHN and AREMA Portfolio Paragraph M2.7.5 does not apply.
   a. Hardening must vary uniformly to 250 BHN at a depth of 1 1/8-inches.
3. Specify in the Shop Drawings the procedures to be used in the depth hardening process, the portions of each frog that are to be depth hardened, and the BHN pattern normally achieved using such procedures.
   a. Proprietary procedures do not need to be disclosed, but must be described in sufficient detail, to permit an understanding of how the specified hardness will be achieved.
4. If items are explosion depth hardened, inspect each item after process as follows:
   a. Visually inspect for cracks, flaws, or porosity; and conduct dye penetrant testing where results of visual inspections are inconclusive.
   b. On manganese steel castings, test surface hardness in accordance with ASTM E10.
5. Re-harden items that fall below the specified hardness range at no additional cost to MTS.
6. Items testing above (harder than) the specified hardness range may only be accepted at the sole discretion of the Engineer provided proof is presented that the excess hardening has not created a martensite metallurgical microstructure.
7. Repair or replace items found to be defective or damaged.
   a. Reject and do not repair items having defects detected in their immediate wheel running surfaces.
   b. Replace non-repairable items at no additional cost to MTS.
8. Repair defects in items in accordance with AREMA Specifications for Special Trackwork, except as modified herein.
   a. Use only shielded manual arc welding or semi-automatic arc welding in accordance with AWS D1.1 to repair defects by welding.
   b. Only use manganese filler to repair defective areas.

E. Shop Welding:

1. Perform welding required on plates in accordance with AWS D1.1, except as modified herein.
2. Preheat carbon steel to 200-degrees Fahrenheit minimum when either the thickness of the base material exceeds 1 1/4-inches or the maximum specified carbon content exceeds 0.30-percent.
3. Determine preheat and inter-pass temperatures by using temperature indicating crayons or other equally suitable means.

F. Identification Markings:

1. Match-mark all items and develop a subcomponent numbering system keyed to Shop Drawings for field assembly.
   a. Each component shall be marked with numeric characters and color that identify the turnout, single crossover, or double crossover to be installed and the position of that component within the assembly.
2. Labeling:
   a. Paint identification on the web of all rails, frogs, and similar components on both ends clear of the weld zone and insulated joint bar area, according to the rail layout details shown.
   b. Paint rail joint members by color on the head of each rail at every joint.
   c. Carefully stencil-paint markings in two contrasting colors (e.g., black letters on a light green, blue, yellow, or red background and white on diamonds), with different color codes corresponding to each special trackwork turnout layout
      1) Right-hand single and double crossover turnouts shall be red to green
      2) Left-hand single and double crossover turnouts shall be blue to yellow
   d. Crossing diamond identification-numbered shall be white.
   e. Do not confuse installation identification numbers with the internal shop work order numbering system.
   f. Only have painted installation numbers on furnished finished track items.
   g. Paint markings on track items are in addition to the permanent identification plates required by Article 2.4G.4 herein.
3. Assign a unique identification number to welded and insulated joints in special trackwork layouts to facilitate field assembly.
   a. Use a numeric code that indicates both the joint number and the listed special trackwork layout.
   b. Joint numbers may only be painted onto the components.
   c. Paint adjoining turnouts' component joint numbers in different colors to simplify component distribution.

4. For each major special trackwork component – switch rails, stock rails, frog and closure rails - provide either a stainless steel plate or a cast steel tag permanently attached to the item with fabricator's markings indicating piece identification number, plan number and manufacturer.
5. Permanently mark all concrete switch ties with an identification number keyed to the shop assembly plan.
6. Do not conceal identification markings or inspector's marks by this painting or coating.

2.5 SOURCE QUALITY CONTROL

A. Shop Assembly:

1. Complete shop assembly for all the special trackwork components in order of the priority assigned to each in Article 3.2 herein.
2. Include all components including one set of fasteners, and rail fastenings in the assembly to completely replicate the special trackwork, as it will be assembled in the field.
   a. Use all the actual rails that will be employed in the field to perform the shop assembly.
   b. Provide an accurate survey reference line that duplicates the track geometrics and which has been laid out with a transit and tape or other accurate surveying methods.
   c. Demonstrate that the rails accurately follow the design alignment within indicated tolerances.
   d. Verify dimensions during shop assembly.
   e. No bracing, spiking to the floor, or use of other similar methods to hold the track in final alignment will be permitted during shop assembly. Demonstrate that shop curved rail pieces have been curved to correct radius and do not need to be forced into alignment by the rail fastenings of the concrete switch ties.
   f. Permanently place rail fastenings on fasteners within limits of special trackwork, and assemble turnout and diamond frogs, guard rails, closure rails, and switch rails.
      1) Lay and anchor rail in accordance with indicated requirements and accepted shop drawings.
      2) Because insulated rail joints will not be furnished by the Contract, provide temporary bars to bolt the rails together during shop assembly.
      3) Fully assemble shop-curved rail with all joints single bolted using two (2) half-joint bars to establish the 1-inch weld gap.
   g. Verify proper track gauges and flangeway dimensions.

B. Shop Assembly Inspection:

1. All products specified to be inspected under the Contract must be shop assembled at the place of special trackwork fabrication or manufacture for final inspection in the following order of priority:
2. Manufacturer's inspection:
   a. Primary responsibility for inspection of the shop assembled special trackwork resides with the various contractors.
   b. Verify the fit and finish of all components.
   c. Note deviations from Contract requirements, make corrections, and re-inspect as required to confirm that corrections have been acceptably completed.
   d. Include the operation of the fully installed switch machine in the inspection of all turnout switches to confirm function and proper position of switch points in relation to the stock rail, switch point stops, and flangeway.
   e. Check switches in both thrown switch positions for conformance with the switch geometry.
3. Inspection:
   a. The Engineer may elect to inspect the shop assembled special trackwork.
   b. Notify the Engineer of the date(s) when shop assembly will be completed a minimum of 14 days in advance of the proposed inspection date(s).
   c. Reconfirm that the assembly will be complete and ready for inspection no later than 48 hours prior to the promised date and time for the commencement of inspection.
   d. Costs associated with delays in inspection dates, such as financial penalties for changing flights of the Engineer's personnel, will be at the Contractor's expense.
   e. Special trackwork layouts shall have been completely inspected by the Contractor's quality control representatives and all corrective actions taken prior to the arrival of the Engineer. Provide the Engineer with a copy of inspection reports, deviations noted, and re-inspection reports.
   f. Present material for inspection in a safe, dry, and protected from the weather-covered area away from manufacturing activities and noise in excess of 75 dBA.
   g. Without additional charge to MTS, provide all necessary facilities, tools, lighting, copies of Shop Drawings and other assistance required for the Engineer to conduct an inspection to whatever level the Engineer deems appropriate at that time.
      1) Provide labor and equipment required to facilitate inspection of the top, sides, and bottom of all materials, and to disassemble components as may be required to inspect concealed surfaces.
      2) Provide templates to check flangeways, rail end drilling, and switch rail planning.
      3) Design the templates for quick and easy use and requiring only one person for the operation.

h. Provide a minimum of eight (8) hours during normal daylight working hours for the Engineer to inspect each completely assembled layout before disassembly for shipment is scheduled to commence.

i. Do not commence disassembly before the Engineer has provided conditional acceptance of the material and released it for shipment.

j. The Engineer will examine shop-assembled items up to a maximum of one trip and 1 day per layout at its own expense; additional trips and time will be charged to the Contractor.

1) Completely shop assemble, inspect, and perform quality control checks on each layout prior to the arrival of MTS.

2) If the Engineer must either make a second trip or stay extra time for re-inspections due to the Contractor's failure to present acceptable materials in a timely fashion, MTS's extra costs for labor (including overhead costs and fee), transportation, lodging, and per diem will be deducted from money due or to become due to the Contractor.

k. The Engineer's inspection personnel have the authority to reject materials, work in progress, or finished work that fails to meet the requirements or these Specifications.

1) The Engineer's inspection personnel have the authority to require corrective work.

2) Development of the details of how corrective work will be accomplished is the responsibility of the Contractor, but the Engineer's inspection personnel have the authority to accept or reject the proposed corrective methods.

l. Notwithstanding the results of shop inspections, final acceptance of special trackwork procurement products will not occur until after they have been delivered, unloaded, and stacked, and are then found to be in acceptable condition.

C. After weld repairs have been made to defective items, have an independent testing Agency, re-inspect the repaired areas of the items in accordance with ASTM E94 to determine the acceptability of the items.

PART 3 - EXECUTION

3.1 INTERFACE WITH OTHER WORK

A. Coordinate and share the information shown on the Contract Drawings with the communications and signals contractor for the Contract through the Engineer, as specified in General Requirements to incorporate the information into his work plans.

3.2 MAINTENANCE MANUALS

A. Provide to the Engineer five (5) paper copies and two electronic copies of instructional manuals required for maintenance of the special trackwork provided.

B. Manuals shall cover maintenance and adjustment of the following components, at a minimum.

1. Switch Points and Stock Rails:
   a. Welding and grinding.
   b. Adjustment of switch braces.
   c. Point and stock rail replacement.
   d. Lubrication locations, products, procedures and schedule.
2. Frogs and Guard Rails:
   a. Weld repairs to manganese frog.
   b. Guard rail adjustment.
3. Other:
   a. Other turnout features as identified during the submittal review process.
   b. Bolt tightening interval and torques.

C. Manuals shall provide part numbers, contact information, and other required information for ordering all replacement parts.

PART 4 - MEASUREMENT AND PAYMENT

4.1 MEASUREMENT

A. Procure No. 6 Turnout with Concrete Ties

1. Procure No. 6 Turnout with Concrete Ties shall be measured for payment by each furnished turnout provided and accepted by the Engineer.

B. Procure Steel Crossing with Concrete Ties

1. Procure Steel Crossing with Concrete Ties shall be measured for payment by each furnished steel crossing provided and accepted by the Engineer.

C. Spare Materials

1. Spare Materials shall be measured for payment by the Lump Sum for material provided and accepted by the Engineer.

D. Survey of Existing Conditions

1. No separate measurement will be made for surveying and confirming existing conditions.

4.2 PAYMENT

A. The contract price paid per unit for “Procure No. 6 Turnout with Concrete Ties” shall include full compensation for furnishing all labor, materials, tools, equipment, and incidentals, and for doing all the work involved to fabricate and deliver the No. 6 Turnouts, including but not limited to submittals, shop drawings and work plans, and shop pre-assembly, as shown on the Plans and as specified in the Standard Specifications, these Technical Specifications, and as directed by the Engineer.

B. The contract price paid per each “Procure Steel Crossing with Concrete Ties” shall include full compensation for furnishing all labor, materials, tools, equipment, and incidentals, and for doing all the work involved to fabricate and deliver the Steel Crossings, including but not limited to submittals, shop drawings and work plans, and shop pre-assembly, as shown on the Plan and as specified in the Standard Specifications, these Technical Specifications, and as directed by the Engineer.

C. The contract price paid of Spare Materials, shall include full compensation for furnishing all labor, materials, tools, equipment, and incidentals, and for doing all the work involved in furnishing the Spare Materials as shown on the Plan and as specified in the Standard Specifications, these Technical Specifications, and as directed by the Engineer.

D. Full compensation for surveying and confirming existing conditions shall be considered as included in the contract price paid per unit for “Procure No. 6 Turnout with Concrete Ties” and “Procure Steel Crossing with Concrete Ties”, therefore no separate payment will be made.

END OF SECTION

SECTION 34 11 33.13
CONCRETE TRACK CROSS TIESCONCRETE TRACK CROSS TIES

PART 1 - GENERAL

1.1 SUMMARY

A. The Work specified in this Section consist of designing, manufacturing, testing, furnishing, delivering and stockpiling of serrated prestressed mono-block concrete cross ties, complete with rail fastenings, and flexible tie splices, in accordance with SANDAG LRT Design Criteria Manual Article 3.2.6 Concrete Crossties and American Railway Engineering and Maintenance of Way Association (AREMA).

1.2 REFERENCES

This Section incorporates by reference the latest revisions of the following documents.

A. AASHTO - American Association of State Highway and Transportation Officials

B. ANSI – American National Standards Institute

C. AREMA – American Railway Engineering and Maintenance of Way Association, Current Edition

D. ASTM – ASTM International

1. ASTM A416 – Standard Specification for Uncoated Stress-Relieved Steel Wire for Prestressed Concrete
2. ASTM A536 – Standard Specification for Ductile Iron Castings
3. ASTM A881/A881M – Standard Specification for Steel Wire, Deformed, Stress-Relieved or Low-Relaxation for Prestressed Concrete Railroad Ties
4. ASTM C31/C31M – Standard Practice for Making and Curing Concrete Test Specimens in the Field
5. ASTM C33 – Standard Specification for Concrete Aggregates
6. ASTM C39/C39M – Standard Test Method for Compressive Strength of Cylindrical Concrete Specimens
7. ASTM C78 – Standard Test Method for Flexural Strength of Concrete (Using Simple Beam with Third-Point Loading)
8. ASTM C109 – Standard Test Method for Compressive Strength of Hydraulic Cement Mortars (Using 2-in. or 50-mm Cube Specimens)
9. ASTM C150 – Standard Specification for Portland Cement
10. ASTM C172 – Standard Practice for Sampling Freshly Mixed Concrete
11. ASTM C295 – Standard Guide for Petrographic Examination of Aggregates for Concrete

12. ASTM C494/C494M – Standard Specification for Chemical Admixtures for Concrete
13. ASTM C586 – Standard Test Method for Potential Alkali Reactivity of Carbonate Rocks as Concrete Aggregates (Rock-Cylinder Method)
14. ASTM C1260 – Standard Test Method for Potential Alkali Reactivity of Aggregates (Mortar-Bar Method)
15. ASTM C1293 – Standard Test Method for Determination of Length Change of Concrete Due to Alkali-Silica Reaction
16. ASTM D257 – Standard Test Methods for DC Resistance or Conductance of Insulating Materials
17. ASTM D395 – Standard Test Methods for Rubber Property – Compression Set
18. ASTM D412 – Standard Test Methods for Vulcanized Rubber and Thermoplastic Elastomers – Tension
19. ASTM D570 – Standard Test Method for Water Absorption of Plastics
20. ASTM D573 – Standard Test Method for Rubber – Deterioration in an Air Oven
21. ASTM D638 – Standard Test Method for Tensile Properties of Plastics
22. ASTM D648 – Standard Test Method for Deflection Temperature of Plastics Under Flexural Load in the Edgewise Position
23. ASTM D732 – Standard Test Method for Shear Strength of Plastics by Punch Tool
24. ASTM D785 – Standard Test Method for Rockwell Hardness of Plastics and Electrical Insulating Materials
25. ASTM D1149 – Standard Test Methods for Rubber Deterioration-Cracking in an Ozone Controlled Environment
26. ASTM D1229 – Standard Test Method for Rubber Property – Compression Set at Low Temperatures
27. ASTM D2240 – Standard Test Method for Rubber Property – Durometer Hardness

E. SANDAG LRT Design Criteria Manual, Current Edition

1.3 DEFINITIONS

A. Crosstie: A transverse component of track system whose functions are the control of track gauge and the transmitting of rail loads to sub-structure. The concrete crossties that will be used in ballasted track will not require special finish of the concrete surface. Concrete crossties for special trackwork; turnouts and crossovers shall be detailed in shop drawings by special trackwork manufacturer.

B. Embedded shoulder: A component of the rail fastening which is embedded in the concrete crosstie and provides anchoring for the rail clip. For the purpose of these Specifications, an embedded female insert will be considered as an embedded shoulder.

C. Flexural strength: Resistance to bending.

D. Lateral load: A load, or component of a load, at the gauge corner of the rail parallel to the longitudinal axis of the tie, and perpendicular to the rail.

E. Longitudinal load: A load along the longitudinal axis of a rail.

F. Negative bending: Bending of a concrete crosstie by application of load that produces tension or reduces compression in the top surface of the tie.

G. Positive bending: Bending of a concrete crosstie by application of a load that produces tension or reduces compression in the bottom surface of the tie.

H. Prestressing tendon: A strand, wire, or bar within a concrete member, which under tension, precompresses the concrete.

I. Prestressed tie: A tie utilizing precompressed concrete and prestressing tendons.

J. Pretensioned concrete tie: A prestressed concrete tie using pretension tendons to precompress concrete.

K. Pretensioning tendon (strand or wire): Steel strands, wires or bars which are stressed prior to the placement of concrete.

L. Rail clip: A component of the rail fastening assembly that clamps the base of running rail to the rail seat pad and the concrete tie.

M. Rail clip insulator: A component of the rail fastening assembly that provides electrical insulation between the rail and rail clip and embedded shoulder.

N. Rail fastening: A component or group of components of a track system which affixes the rail to the crosstie.

O. Rail seat: The area of the tie on which the running rail rests.

P. Rail seat pad: An elastomeric pad located between the running rail and the rail seat of the tie.

Q. Reinforcement or reinforcing steel: Steel, excluding prestressing tendons, introduced within a concrete tie to improve its structural strength and to control deflection and cracking.

R. Structural crack: A crack in the tensile face of the concrete tie, which increases in size under application of increasing load.

S. Vertical load: A load or vector component of a load, at right angle to a line joining the two rail seats of the tie and normal to the longitudinal axis of the rail.

1.4 SUBMITTALS

A. Submittals shall comply with Section 3.9, “Submittals” of the Standard Construction Agreement and General Conditions.

B. Shop Drawings of the concrete ties including information necessary for fabrication.

C. Tie dimensions, weights, tolerances, details, finishes, prestressing steel, fasteners, and other embedded items.

D. Procedures for installation and replacement of the fastener components.

E. Certified copies of tests including original calculations and interpretations of results.

F. Concrete mixes as determined by a registered professional engineer by the State of California.

G. Method of attaching the embedded shoulder.

H. Data on the elastic rail clip.

I. Procedures for stockpiling, loading, and unloading ties.

1.5 QUALITY ASSURANCE

A. Quality assurance shall comply with Section 01 00 00-3.21.

1.6 DESIGN QUALIFICATIONS TEST

A. Design Qualification Tests may be waived by the Contractor QC providing that previous satisfactory qualification testing is provided.

B. After Shop Drawings of concrete crossties are accepted and rail seat pads and rail clip insulators have successfully completed design testing, produce a lot of at least 10 monoblock ties conforming to the Shop Drawings and these Specifications. The contractor QC or its designee will select at random four of these ties for laboratory testing. For design qualification testing of rail fastenings, furnish a section of concrete tie or an equivalent concrete tie block with rail seat and rail fastening assembly identical to the ties furnished for testing.

C. Do not start production of ties until the design tests have been passed and the Contractor QC or its designee has authorized production. The tie block and each of the four (4) ties submitted for testing will be measured and examined to determine their compliance with these Specifications. Upon satisfactory completion of this examination, subject the tie block and two ties, identified as Ties No. 1 and No. 2, to performance tests. The remaining two (2) ties, identified as Ties No. 3 and No. 4, will be retained by the Contractor QC or its designee for further test use and as a control for dimensional tolerances and surface appearance of ties subsequently manufactured.

D. Perform the complete test program specified in this article with rail insulators arranged for 4-feet 8 1/2-inch gauge.

E. Sequence of Design Tests: Tie No. 1.

1. Rail Seat Vertical Load Test, Positive: Described in Article 1.6H. Perform on Rail Seat A.

2. Center Negative Bending Moment Test: Described in Article 1.6HI.
3. Center Positive Bending Moment Test: Described in Article 1.6J.
4. Rail Seat Vertical Load Test, Positive: Described in Article 1.6H. Perform on Rail Seat B.
5. Bond Development, Tendon Anchorage, and Ultimate Load Test: Described in Article 1.6K. Perform on Rail Seat A.

F. Sequence of Design Tests: Tie No. 2

1. Embedded Shoulder Tests: Described in Article 1.6L. Perform on embedded shoulders.
2. Rail Fastening Uplift Test, Parts 1 and 2: Described in Article 1.6M. Perform on one rail seat.
3. Electrical Resistance and Impedance Tests: Described in Article 1.6N.

G. Sequence of Design Tests: Tie Block

1. Rail Seat Pad Test: Described in Article 1.6O.
2. Rail Fastening Uplift Test, Part 1: Described in Article 1.6M.
3. Rail Fastening Repeated Load Test: Described in Article 1.6P.
4. Rail Fastening Longitudinal Restraint Test: Described in Article 1.6Q.
5. Electrical Resistance and Impedance Tests: Described in Article 1.6N.
6. Rail Fastening Lateral Restraint Test: Described in Article 1.6R.
7. Rail Seat Pad Test: Described in Article 1.6O.

H. Rail Seat Vertical Load Test, Positive: With the tie supported and loaded per manufacturer test procedures, apply a load until the load P of 20.0 kips is obtained. Apply the load at a rate not greater than five kips per minute until a load of 20.0 kips is obtained. Use an illuminated five-power magnifying glass to locate cracks. If the measured structural crack on the tensile face is no longer than 1 inch, the requirements of this test will have been met.

I. Center Negative Bending Moment Test: With the tie supported and loaded per manufacturer test procedures, apply a load increasing at a rate not greater than five (5) kips per minute until the load P of 9.6 kips is obtained. Hold this load for at least three (3) minutes; during this period, inspect to determine if cracking occurs. Use an illuminated five-power magnifying glass to locate cracks. If the measured structural crack on the tensile face is no longer than 1 inch, the requirements of this test will have been met.

J. Center Positive Bending Moment Test: With the tie supported and loaded per manufacturer test procedures, apply a load increasing at a rate not greater than five (5) kips per minute until the load P of 5.9 kips is obtained. Hold this load for at least three (3) minutes; during this period, inspect to determine if cracking occurs. Use an illuminated five-power magnifying glass to locate cracks. If the measured structural crack on the tensile face is no longer than 1-inch, the requirements of this test will have been met.

K. Bond Development, Tendon Anchorage, and Ultimate Load Test: Test pretensioned ties for bond development and ultimate strength. With the tie supported and loaded per manufacturer test procedures, at rail seat A, apply a load increasing at a rate not greater than five (5) kips per minute until a load of 40 kips is obtained. If there is no more than 0.001-inch tendon slippage determined by an extensometer reading to 1/10,000-inch suitably attached to the end of the tie, the requirements of this test will have been met. Then increase the load until ultimate failure of the tie occurs and record the maximum load obtained.

L. Embedded Shoulder Tests

1. Pull-Out Test: Perform on each shoulder per manufacturer test procedures. Apply an axial load of eight (8) kips to each shoulder separately. Hold this load for at least three (3) minutes; during this period, inspect to determine if there is any slippage of the shoulder or any cracking of the concrete. The shoulder shall not slip and there shall be no cracks in the vicinity of the embedded shoulder wider than 0.003-inch. Inability of the shoulder itself to resist the eight (8) kips load without permanent deformation shall also constitute failure of this test.
2. Torque Test: Upon successful completion of the pull-out test, perform torque test on each shoulder per manufacturer test procedures. Apply a torque of 250 foot-pounds about the vertical axis of the shoulder by means of a calibrated torque wrench and a suitable attachment to the shoulder. Hold this torque for at least three (3) minutes. Ability of the shoulder to resist this torque without rotation, cracking of the concrete, or permanent deformation shall constitute passage of this test.

M. Rail Fastening Uplift Test

1. Secure an 18 to 20-inch piece of 115 RE rail to one rail seat using a complete rail fastening assembly per manufacturer test procedures. Apply an incremental load to the rail until the rail separates from the pad, the pad separates from the rail seat or a load P of ten (10) kips is reached, whichever occurs first. The load P shall be the measured load plus the unsupported tie weight plus the frame weight. Record the load P at which the rail separates from the pad, the pad separates from the rail seat or ten (10) kips is reached, whichever occurs first. Then release the load completely.
2. Apply a load of 1.5P or 10 kips, whichever is smaller. The shoulders shall not pull out or loosen in the concrete. Fractures within any component of the rail fastening will be unacceptable. The rail will not be released during the test.

N. Electrical Resistance Tests

1. Affix two short pieces of 115 RE rails to the tie using complete rail fastening assembly. Provide rail section lengths greater than the width of the tie. Place the tie upright in a bare (uncoated) metal trough with a minimum clearance of four inches between the walls of the trough. Level the trough and pour water into the trough, taking care to ensure the fastener components are not wetted. The water may be regular tap water with resistivity of 3,000 to 5,000 ohm-cm. Fill the trough with water to approximately 1-inch below the top of the tie, measured at the center of the rail. Maintain the water at this level for the duration of the tests.

2. After 48 hours, measure the resistance between the rails and the trough by applying a DC potential of 1,000 volts for a period of 15 minutes. The resistance measured shall be greater than 1,000,000 ohms.
3. Immerse the rail completely by increasing the water within the trough to cover the top of the rail. After a minimum of six (6) hours, with the full tie and rail covered, reduce the water level to 1-inch below the rail seat. Without drying the rail, within five minutes, repeat electrical resistance tests. The resistance measured shall be greater than 350,000 ohms.

O. Rail Seat Pad Test

1. Load the rail seat pad vertically using a rail section secured to the tie block by a complete rail fastening assembly.
2. Apply a static load, at a rate between three (3) and six (6) kips per minute, in increments of one (1) kip up to a maximum of 30 kips. For each load increment, measure and record the vertical pad deflection to the nearest 0.0001-inch. Plot the recorded values for vertical load versus deflection on a graph. Calculate the spring rate, as determined by the slope of the line connecting the points representing pad deflections at four (4) and 20 kips.
3. Release the load and record the pad deflection ten (10) seconds after load removal.
4. Meet the following requirements:
    a. Each pad shall return to within 0.002-inch of its original position ten (10) seconds after load removal.
    b. The final spring rate value for each pad, not to exceed 300,000 pounds per inch. The spring rate at 20 kips loading, not to exceed 650,000 pounds per inch.
    c. The spring rate values determined from initial tests conducted on three (3) pads, not to vary more than 15-percent.
    d. The spring rate values determined from final tests conducted on two (2) pads, not to vary more than 25-percent.

P. Rail Fastening Repeated Load Test

1. Remove the loose mill scale from an 18 to 20-inch section of new 115 RE rail by wiping with a cloth. Secure the rail to the rail seat in the tie block using a complete rail fastening assembly. Determine the load P. Determine the load as in the fastener uplift, in which case use a new set of rail clips for the repeated load test.
2. Secure the rail section to the rail seat in the tie block using a complete rail fastening. Per manufacturer test procedures, apply alternating downward and upward loads at an angle of 20 to the vertical axis of the rail at a rate not to exceed 300 cycles per minute for three million cycles. The rail shall be free to rotate under the applied loads. One cycle shall consist of a downward and an upward load. The magnitude of the upward load shall be 0.6P with P. If springs are used to generate the upward load, the downward load shall be 22 kips plus 0.6P. If a double-acting hydraulic ram is used to generate both the upward and downward load, provide a downward load of 22 kips.

3. This test may generate heat in elastomeric rail seat pads. Do not allow the temperature of such pads to exceed 140-degrees Fahrenheit. Heat build-up may be controlled by reducing the rate of application or by providing period of rest.
4. Rupture failure of any component of the fastener shall constitute failure of this test.

Q. Rail Fastening Longitudinal Restraint Test: Following the performance of the rail fastening repeated load test above, and without disturbing the rail fastening, subject the rail fastening to a longitudinal restraint test. Apply a longitudinal load per manufacturer test procedures, in increments of 200 pounds. Take readings of longitudinal rail displacement after each increment. Readings of rail displacement shall be the average of the reading of two dial indicators reading to 0.001-inch, one (1) placed on each side of the rail with their plungers parallel to the longitudinal axis of the rail. Increase the load incrementally until a load of 2400 pounds is reached. Hold this load for at least 20 minutes. The rail shall not move more than 0.125-inch during the initial 10-minute period; and shall not move more than 0.005-inch during the second ten (10) minutes. The rail fastening shall be capable of meeting the requirements of this test in either direction. If these criteria are met, the tie and rail fastening will have passed this test.

R. Rail Fastening Lateral Load Restraint Test

1. With a suitable length of new 115 RE rail affixed to the tie block in a manner appropriate to the rail fastening being tested, support and load the entire assembly per manufacturer test procedures. Fix the loading head against translation and rotation. Provide a 10-inch by 10-inch by 3/4-inch thick, five ply, exterior grade plywood wood block.
2. Apply a preload of 13 kips to the rail to seat the rail in the rail fastening. Upon release of the preload, take a zero reading on the dial indicators which measure rail translation. Apply load at a rate not to exceed five kips per minute until either 27 kips have been applied or the rail base has translated 1/8-inch, whichever occurs first. Inability of the rail fastening to carry the 27-kip load with 1/8-inch or less of rail translation shall constitute failure of this test. Complete failure of any component of the tie or rail fastening is cause for rejection.
3. With loads removed from the rail, place a roller nest between the fixed loading head and the wood block on the rail head. The roller nest shall not offer resistance to lateral motion of the rail head. After taking zero readings on the dial indicators, which measure gauge widening and rail translation, apply a load of 13.5 kips at a rate not to exceed five kips per minute. Rail rotation, gauge widening less rail translation, greater than 1/4-inch shall constitute failure of this test.

1.7 DESIGN QUALIFICATION TEST FOR RAIL SEAT PADS

A. Design Qualification Tests for rail seat pads may be waived by the contractor QC providing that previous satisfactory qualification testing is provided.

B. Elastomer Pads (concrete ties)

1. Specimens: Perform the following tests on each of two specimens per manufacturer test procedures. Use a separate pair of specimens for each test. Prior to testing, condition specimens for at least seven days at 23-degrees Celsius and 50-percent relative humidity. Failure of either of the two specimens to meet requirements will be cause for rejection.
2. Hardness: Measure Shore A hardness in accordance with ASTM D2240. The reading on each pad to be between 60 and 70 durometers. Average the two readings and record the average for reference in production testing.
3. Tensile strength: Measured by ASTM D412; 1,700 psi, minimum.
4. Ultimate elongation: Measured by ASTM D412; 250 percent, minimum.
5. High temperature compression set: Using method B of ASTM D395, test for 22 hours at 70-degrees Celsius. The compression set shall not exceed 30-percent.
6. Compression set at minus 10C: Using ASTM D1229, test for 70 hours at minus 10 degrees Celsius. The compression set at 30 minute after release (t30 reading) shall not exceed 65-percent.
7. Accelerated aging: Using ASTM D573, age the elastomer for 96 hours at 70-degrees Celsius. Measure and record the change in hardness, tensile strength and ultimate elongation. The tensile strength shall not decrease more than 25-percent. The change in hardness measured on the durometer A scale shall not exceed ten (10) points.
8. Volume resistivity: Apply 100 volts DC for three (3) minutes. The volume resistivity, measured in accordance with ASTM D257 shall be at least 1 x 1012 ohm-centimeters at saturation.
9. Water absorption: Using ASTM D570, water absorption at saturation shall not be more than 2-percent.
10. Resistance to ozone cracking: Test the specimens in accordance with ASTM D1149 at a temperature of 40-degrees Celsius and an ozone concentration of 50 pphm. The elastomer shall exhibit no cracking when examined in accordance with ASTM D1149 at the end of a 100-hour exposure.

1.8 EXISTING DESIGNS

A. For existing concrete tie and fastener designs, qualification acceptance may be based on the submittal of appropriate certified data which will prove to the satisfaction of the Contractor QC or its designee that the design proposed will meet or exceed the requirements indicated. For an existing design to be acceptable, components of the tie, including the clip and the rail seat pad must have been tested as a unit. Submit the following for each proposed design:

1. Certified laboratory test result reports in such detail and format as to enable the Contractor QC or its designee to evaluate the information and ascertain that the tests and results are representative of the requirements indicated. If there is doubt as to the results or similarity of previous tests, the Contractor QC or its designee may order that some or all of the tests herein may be required before acceptance of the proposed design.

2. In addition to certified laboratory test result data, submit proof that an existing design has been satisfactorily subjected to service loading similar to or greater than that anticipated in the Contract for review by the Contractor QC or its designee. Proof in the form of letters from an authorized representative of the property where the ties have been installed will be acceptable.
3. Submit a detailed experience record of prestressed concrete tie design, production and field installations.

PART 2 - PRODUCTS

2.1 CONCRETE

A. Minimum 28-Day Design Compressive Strength: 7,000 psi. Secure samples in accordance with ASTM C172. Make and laboratory cure specimens in accordance with ASTM C31. Cure specimens made to check the adequacy of curing and protection of concrete entirely under production conditions. Test concrete cylinders for strength in accordance with ASTM C39. For each day of production, test not less than three cylinders.

B. Minimum 28-Day Flexural Strength: 600 psi. Make specimens in accordance with ASTM C31. Cure specimens to check the adequacy of curing and protection of concrete entirely under production conditions. Make strength tests on 6-inch by 6-inch by 20-inch beams in accordance with ASTM C78. For each day of production, test not less than one beam at 28 days.

C. Cement - Portland cement conforming to ASTM C150: Type II, or III.

D. Concrete Aggregates:
   1. Provide both fine and coarse aggregates that meet the requirements of the AREMA specifications for aggregates in the AREMA Manual for Railway Engineering, Volume 2, Chapter 8 “Concrete Structures and Foundations,” Part 1 “Materials, Tests and Construction Requirements,” Section 1.3 “Aggregates.”
      a. Provide natural aggregates complying with ASTM C33, Class 4S.
         1) Conduct a separate test for each type of cement at 3 and 6-month intervals.
         2) Repeat the testing every six (6) months for each source.
      b. Provide evidence that concrete containing aggregate from the proposed source has a satisfactory service history of at least five (5) years when used with cement content and alkali burden similar to the job mix.
         1) This evidence must include structures requiring a Class 4S aggregate.
      c. Provide aggregate having a maximum size of 3/4-inch.
      d. If the coarse or fine aggregate is supplied in more than one (1) size, store each size separately.
      e. Allow washed aggregate to drain in stockpiles before use.
      f. Provide aggregate free from ice when used.

2. In addition to the requirements of ASTM C33, use an independent testing laboratory to conduct the following tests:
    a. For each new source, conduct a petrographic examination in accordance with ASTM C295.
    b. Evaluate potential alkali reactivity in accordance with ASTM C1293.
        1) When there is insufficient time for testing in accordance with ASTM C1293, potential alkali reactivity may be evaluated by testing in accordance with ASTM C1260, but a test conforming to ASTM C1293 shall be started immediately and the results conveyed to MTS immediately upon completion.
    c. Test aggregates containing carbonate in accordance with ASTM C586 for evaluation of potential alkali carbonate reactivity.

E. Water Used In Mixing Concrete and Washing Aggregates:
    1. Potable and free from harmful amounts of oils, acids, alkalis, salts, organic materials, or other substances that may be deleterious to concrete or steel.
    2. Do not allow chloride ion concentrations in excess of 400-ppm.
    3. Mortar test cubes with the proposed mixing water shall have 7-day and 28-day strengths equal to at least 90-percent of strengths of similar specimens made with distilled water. Strength test comparison shall be made on mortar, identical except for the mixing water, prepared and tested in accordance with ASTM C109.

F. Accelerating, Retarding, and Water-Reducing Admixtures: If used, provide water-reducing admixtures, water-reducing and retarding admixtures, and water-reducing accelerating admixtures conforming to ASTM C494/C494M.
    1. Do not use admixtures containing chlorides.
    2. Do not use fly ash and other mineral admixtures.

G. Mixing Water: Potable and free from harmful amounts of oils, acids, alkalis, salts, organic materials, or other substances that may be deleterious to concrete or steel. Provide mixing water, including that portion of the mixing water contributed in the form of free moisture on aggregates that has a chloride ion content of less than 100 ppm. When required, test mixing water in accordance with AASHTO T26.

H. Admixtures
    1. Accelerating, Retarding, and Water-reducing Agents: ASTM C494.
    2. Do not use admixtures containing chlorides, fluorides, sulphites, nitrates, or aluminum powder.

I. Cement Content: 600 pounds per cubic yard, minimum.

J. Water-Cement Ratio: 0.40 maximum.

2.2 PRESTRESSING TENDONS

A. This Article specifies the types of prestressing tendons.

B. Wires for pretensioning tendons: conform to ASTM A421 or ASTM A881.

C. Standards for prestressing tendons shall conform to ASTM A416, with the following minimum properties:

1. Breaking strength: 23,000 pounds
2. Yield strength (1-percent extension): 19,550 pounds

D. Wires for prestressing tendons shall conform to ASTM A881.

E. Other means may be used, subject to review and acceptance of the Engineer or its designee.

F. Thoroughly clean all tendons before application.

2.3 FLEXIBLE TIE SPLICE

A. Provide flexible tie splice in conformance with the details provided within the contract drawings. Tie splice required within embedded track shall include protective measures to protect against embedment in concrete.

2.4 RAIL FASTENING ASSEMBLY

A. Rail Fastening Assembly shall conform to Section 34 11 36, Article 2.2, of these Technical Specifications.

B. Embedded Anchor Inserts, Bolts, and Other Elements for ties for special trackwork.

1. Provide concrete turnout ties with fastening systems as required for the purpose of securing turnout plates.
    a. Provide inserts cast into the turnout tie.
    b. Provide locations and tolerances of rail fastening inserts in accordance with the fastening manufacturer’s drawings and recommendations.
2. Internally thread each insert according to the requirements of ANSI B1 Coarse Thread Series, class 2B tolerance; and provide a blind bottom.
3. Fabricate inserts from one of the following:
    a. Steel with an insulated coating.
        1) Fabricate inserts from steel having a Brinell Hardness Number between 150 and 300.
        2) Externally coal inserts to provide a bulk resistance of ten (10) megohms between the insert interior thread and external surface of the applied coating with 500 volts DC applied across the coating.
    b. Ductile iron with a nylon insert.

1) Outer-Threaded Insert Barrel:
   a) Material: Ductile iron grade 65-45-12, tested in accordance with ASTM A536.
   b) Tensile strength, ultimate: Greater than 65,000 psi.
   c) Tensile strength, yield: Greater than 45,000 psi.
   d) Elongation at break: Greater than 12-percent.
2) Inner-Threaded Polymer Insert:
   a) Material: 33-percent glass fiber reinforced nylon 66.
   b) Tensile strength, yield: Greater than 27,000 psi, tested in accordance with ASTM D638.
   c) Elongation, percent break: Less than 4-percent, tested in accordance with ASTM D638.
   d) Hardness, Rockwell R: Greater than 101 R, tested in accordance with ASTM D785.
   e) Water absorption: Less than 2-percent, tested in accordance with ASTM D570.
   f) Volume electrical resistivity: Greater than 1 x 1012 ohm-cm, tested in accordance with ASTM D257.
   g) Surface electrical resistivity: Greater than I x 1010 ohm, tested in accordance with ASTM D257.
   h) Thermal deflection temperature: Greater than 450-degrees Fahrenheit at 264 psi, tested in accordance with ASTM D648.

C. Fabrication of Concrete Tie for Special Trackwork.
   1. Conform to this Section as specified herein except that special trackwork ties shall not be fabricated with a multiple-sided (i.e., “scalloped”) pattern on the sides of the ties.
   2. Unless otherwise permitted herein or approved in advance by the Engineer, special trackwork ties shall consist of a uniform cross section from one end of the tie to the other.
      a. Switch machine ties shall be cast with a depressed (“dapped”) mounting surface for the switch machine so that the top of the switch machines is recessed to an elevation at or below the top of rail.
      b. Coordinate design of concrete switch ties with the switch machine manufacturer so that each switch machine tie has inserts, mounting surfaces and other machine mounting features in the proper locations for switch machines mounting using standard rod lengths and configurations.
      c. If multiple turnout sizes are provided, standardize mounting configurations and tie spacings so that switch machines, mounting plates and bolts, clips, switch rods and other machine-related parts are standard to all turnout types. Differences between right-handed and left-handed arrangements of the same turnout shall me limited to fabrication of a limited number of components in a “mirror image” configuration.

2.5 TIE DIMENSIONS, CONFIGURATION, WEIGHT, AND TOLERANCES

A. Protrusions: Do not use sharp angles or protrusions which are easily damaged by handling or tamping.

B. Weight: 700 pounds, maximum for standard tie.

C. Length (Detailed dimensions as shown on plans)
   1. Design length:
      a. 8-feet 3-inches.
      b. Various lengths for special trackwork
   2. Manufacturing tolerances - Plus 1/2-inch, minus 1/8-inch.

D. Width (Detailed dimensions as shown on plan)
   1. Design widths:
      a. Minimum at ballast bearing area (bottom of tie): 10 3/8-inches.
      b. Minimum at top surface from rail seat area to end of tie:
         1) 7 1/4-inches
         2) 10-inches for special trackwork ties
      c. At all locations along the tie, the width at the bottom: At least equal to or greater than the width at the top.
   2. Manufacturing tolerances: Plus or minus 1/8-inch.

E. Depth
   1. Design depth:
      a. 8-inches at rail seat; 6 1/4-inches minimum at center of tie,
      b. 10-inches at rail seat plate for special trackwork ties.
   2. Manufacturing tolerances: Plus 1/4-inch, minus 1/8-inch.

F. Track Gauge: Standard Transit Ties: 4-feet 8 1/2-inches.

G. Rail Cant:
   1. Cant rail seats 1:40 toward centerline of tie. Cants between 1:35 and 1:45 will be permitted as tolerances.
   2. Zero Cant through special trackwork.

H. Rail Seat Plane: Flat smooth surface within plus or minus 1/32-inch.

I. Differential Tilt of Rail Seats in the direction parallel to the rail of one rail seat to the other: Not exceed 1/16-inch over a width of six (6) inches.

J. Rail Seat Elevation: Two rail seats, same elevation from the bottom of the tie within plus or minus 1/16-inch.

K. Protrusion of Pretensioning Tendons: 1/8-inch maximum beyond the ends of the ties.

L. Concrete Cover for Prestressing Tendons, Ducts and Prestressing End Fittings.

1. Design dimension: 3/4-inch minimum cover. Use epoxy grout or other accepted material to cover the ends of tendons. Measure cover from outside of embedded items to surface of concrete.
2. Manufacturing tolerances for positioning prestressing tendons and for clear concrete protection (cover) and depth of prestressing tendons - Plus or minus 1/8-inch.

M. Surface Finish

1. Top surfaces: Present a smooth, uniform appearance. Except at the rail seat, a random scattering of surface voids will not be cause for rejection. Heavy concentrations of surface voids or evidence of improper mixing, vibrating or curing will be cause for rejection.
2. The ends of ties need not be flat planes or surfaces, but there shall be no evidence of tearing of the concrete where the prestressing strands emerge or of any void in contact with a strand.

N. Markings - Mark on top of ties with indented or raised letters to indicate the manufacturer, type of tie and year of manufacture or as shown on Contract Plans. Special trackwork ties shall be marked to show their position in the double crossover layout as shown on the contractor developed shop drawings for ease of field installation.

PART 3 - EXECUTION

3.1 CONCRETE QUALITY

A. Water content will be kept to a minimum consistent with the strength requirements and placement needs. Concrete mixes will be proportioned to produce a compressive strength of at least 7,000 psi measured at 28 days on standard 6-inch by 12-inch cylinders as specified in Article 2.1A.

B. Concrete strength at transfer will be adequate for the requirements of anchorages and will not be less than 4,000 psi.

3.2 PRESTRESSING TENDONS

A. Load - Applied in two increments. An initial load of approximately 1,000 pounds will be applied to the individual strands to straighten them, eliminate slack, and provide a starting or reference point for measuring elongation.

B. Prestressing force: Determined by measuring strand elongation and by checking jack pressure on a calibrated gage or using a calibrated dynamometer. Discrepancies exceeding five percent shall be investigated and corrected. Elongation requirements are to be taken from average load elongation curves for the steel used.

C. Strands may be stretched either individually or simultaneously. If strands are stretched simultaneously, provision must be made to induce approximately equal stress in each.

D. Transfer of force from bulkheads of the pretensioning and to the concrete will be carefully accomplished by gradual and simultaneous detensioning of all strands. Exposed strands shall be cut near the tie end. Projection of strands beyond ends of ties will be no more than 1/8-inch.

E. Minimum concrete cover for reinforcement: 3/4-inch.

F. Tolerance for the depth of reinforcing tendons: +/- 1/16-inch from design depth. Voids in concrete surrounding tendons will be cause for rejection.

3.3 PROPORTIONS OF CONCRETE MIX

A. Unless previous data is available to show that a concrete mix will be satisfactory for the production concrete ties, establish concrete mix designs by test on trial batches to achieve required strengths.

B. Trial mixes using aggregate, water, cement and admixtures proposed for manufacture of concrete ties will be made using not less than three different water-cement ratios which will produce a range of strengths encompassing those specified in Article 3.1A. For each water-cement ratio, make, cure, and test not less than three specimens for each age.

3.4 REMOVAL OF TIES FROM FORMS AND FINISHING

A. Remove ties from forms in a manner preventing damage.

B. Finishing

1. Formed surfaces of the finished tie will have a uniformly dense surface. The surface of the rail seat will have a smooth finish and to be free from surface irregularities and air holes. Other surfaces - A smooth finish that may contain honeycomb not exceeding two percent of the surface and a maximum void diameter of 1/4-inch.
2. Bottom surface - A rough-broom finish.

3.5 MIXING, PLACING, AND CURING OF CONCRETE

A. Preparation for Placing Concrete

1. Before placing concrete, clean equipment for mixing concrete, remove debris from spaces to be occupied by the concrete, oil forms, and clean reinforcement of deleterious coatings. Inspect forms for alignment and tightness of joints, and accuracy of the position of bulkheads, prestressing steel, and inserts will be verified.
2. Proportioning of Component Materials

a. Measure fine and coarse aggregates and cement by weight, based on a saturated surface dry condition corrected for free moisture.

b. Measure water and liquid admixtures by weight or volume.

c. Measurement of various components of concrete - Within the following limits:

1) Cement, 1-percent

2) Water, 1-percent

3) Fine aggregate, 2-percent

4) Coarse aggregate, 2-percent

5) Cumulative aggregate, 2-percent

6) Admixtures, 3-percent

3.6 PRODUCTION QUALITY CONTROL

A. After ties and fasteners have passed the design tests specified herein, and accepted by the Contractor QC or its designee, further production of these items may proceed without further design testing. During production of accepted designs, the manufacturer shall perform quality-control tests to assure products are in compliance with these Specifications and the accepted design. Testing to be witnessed by the Contractor QC or its designee.

B. Daily Tests - Perform the following production quality-control tests prior to delivery on one tie selected at random from every 200 ties of the same design, or fraction thereof, produced each day. Test each tie with different rail clips, insulators, and rail seat pads. Randomly select fastener parts tested individually and selected from each production lot in proportion to the number of parts in that lot.

1. Verify rail seat configuration and embedded shoulder location for compliance with Article 2.4.

2. Perform the rail seat vertical load test with positive moment specified in Article 1.6.H.

3. If the instant demolding process is used for transit ties, perform the tests specified in Article 1.5K. on all the shoulders on the tie.

4. Perform the electrical resistance test specified in Article 1.6.N. Perform the test as a dry test only. Acceptance criteria will be as specified in Article 1.6.N.2.

5. Elastomer Pad

a. Batch control: A batch is defined as the rubber mixed, processed and cured together, not exceeding one (1) day’s production. Keep the pads segregated by batch. Perform the following tests on two samples chosen from each batch at random. Use two different specimens for each test. If either of the two samples fails a test, the entire batch will be rejected or subjected to the test which the sample failed. Prior to testing, condition specimens for at least seven days at 23 degrees Celsius and 50 percent relative humidity.

b. Hardness: When measured in accordance with ASTM D2240, the hardness shall be within plus or minus five durometers, Shore A, of the average recorded in Article 1.7.

c. Tensile strength, ultimate elongation, high temperature compression set, volume resistivity and water absorption: Test as specified in Article 1.7.

C. Retesting: Should any test tie fail tests required by Article 3.6A, test two (2) additional ties from that same 200 tie lot. In the event either of these ties fails, either test or reject 100-percent of the remainder of the 200 tie lot.

D. Disposition of Test Ties: Ties that pass the testing requirements, have no cracks or only non-structural cracks, and are otherwise undamaged after testing will be considered acceptable for delivery.

E. Bond Development or Tendon Anchorage Test: Subject one tie selected at random from every 2,000 ties of the same design, or fraction thereof, to the bond development or tendon anchorage test specified in Article 1.6.K. A load rate exceeding five kips per minute may be applied. If the tie does not pass the test, test three additional ties selected at random. If any of the three additional ties do not meet the requirements of Article 1.6.K, the entire lot may be rejected at the option of the Engineer or its designee.

F. Location for Inspection and Quality Control Testing: Quality control testing may be performed at any test facility, including such facilities at the manufacturer's plant, provided they meet the acceptance of the Contractor QC or its designee. Notify the Contractor QC or its designee in writing at least five Working days in advance of the dates scheduled for quality control tests. Testing may be observed by the Contractor QC or its designee.

3.7 SHIPPING AND HANDLING

A. Securely brace ties for transportation to prevent any movement that could cause damage. Ship ties in a horizontal position, braced with wooden spacer blocks so that the top surface or cast-in-place hardware does not contact ties loaded above. Do not load ties higher than the top of cars nor more than six layers deep. Do not drop or skid ties.

B. Package other parts to prevent damage during shipment and to facilitate handling. Package rail seat pads in sealed polyethylene sheets and place in solid covered containers. Do not mix different parts in the same package.

C. Within the area designated by the Contractor QC or its designee, store ties so that additional handling of the ties is unnecessary until the final distribution. Unload ties from the car or truck in a manner that will not damage the ties. Do not drop or skid the ties from the truck bed to the ground. Provide the necessary supports and spacers so that the ties will not contact the ground during storage and that the top surface or cast-in-place hardware does not contact the ties stacked above. Place supports and spacers at the rail seat areas of the ties. Stack each tie according to type.

PART 4 - MEASUREMENT AND PAYMENT

4.1 MEASUREMENT

A. No separate measurement will be made for furnishing concrete track cross ties.

4.2 PAYMENT

A. Full compensation for fabricating concrete track cross ties, including flexible tie splices, shall be considered as included in the contract price paid per unit for “Procure No. 6 Turnout with Concrete Ties” and “Procure Steel Crossing with Concrete Ties”, therefore no separate payment will be made.

END OF SECTION

SECTION 34 11 36
TRACK RAIL FASTENERSTRACK RAIL FASTENERS

PART 1 - GENERAL

1.1 SUMMARY

A. This Section defines the requirements for the design, manufacture, supply, inspection, testing and delivery of elastic rail fasteners and cast-iron shoulders for use on concrete crossties on ballasted track.

1.2 REFERENCES

A. AREMA: 2014 Manual For Railway Engineering, American Railway Engineering and Maintenance of Way Association, Portfolio of Trackwork Plans, and Communications and Signals Manual

B. SANDAG LRT Design Criteria Manual

1.3 SUBMITTALS

A. Submittals shall comply with Section 3.9 “Submittals,” of the Standard Construction Agreement and General Conditions.

B. Submit the following:

1. Materials: Submit individual certifications that all materials furnished by the Contractor conform to the specified requirements.
2. Shop Drawings: Submit Shop Drawing and product data (6 Copies each) for the Engineers approval for trackwork items furnished by the contractor. All Shop Drawings shall be submitted in hard copy and PDF format, prior to fabrication. Acceptance of shop drawing does not relieve Manufacturer of requirements for functionality or defects or other failures to meet the Contract requirements.
3. Detail drawings for each fastening system specified herein.
4. Inspection and Test Plan and Procedures.
5. Packaging Procedures.
6. Clip hardness and toe load test procedures, including acceptance criteria.

1.4 QUALITY CONTROL AND ASSURANCE

A. Quality assurance/quality control shall be in accordance with the requirements of Section 01 00 00, Article 3.20, “Quality Control,” of the Technical Specifications.

PART 2 - PRODUCTS

2.1 RESILIENT RAIL FASTENING ASSEMBLY FOR CONCRETE TIES

A. Provided for use with 115 RE rail.

B. Include elastic rail clips, rail seat pads, embedded shoulder, and rail clip insulator with the rail fastening, comprised of as few components as economically and technically feasible for ease of assembly, disassembly, and maintenance. The rail clips, rail seat pads, and insulators shall be furnished by rail clip manufacturer and shall be compatible with concrete tie shoulders.

C. Furnish steel components except the embedded shoulder that are replaceable and reusable in the field by one man using either mechanical or hand tools, without adjusting the horizontal and vertical alignment of the rail.

D. Use only one type of rail clip throughout except rail clips for the rail joint bars need not be identical in design to those used on a standard rail, but have similar performance characteristics, be made by the same manufacturer, and be installed into identical shoulders as the standard rail clip. Provide rail clips for the joint bars that clear the envelope of the “D” Bar as manufactured by Allegheny or the Rib Bar as manufactured by Portec, Inc., or approved equal.

E. Fasteners shall have, on both sides of the rail base, a positive means of preventing more than 1/8-inch total lateral movement of the rail base relative to the fastener in case of failure or loosening of one or both rail clips. The positive means shall extend at least 3/8-inch above the base of rail in the installed position.

F. Rail Seat Pads

1. Provide 3/8-inch-thick elastomer pad rail seat pads made from processed natural rubber.
2. Use first quality new ingredients processed and cured in accordance with accepted standard practice.

G. Rail Clip

1. Provide galvanized elastic rail clips of a proven design that are resilient and have a detachable spring clip such as the Pandrol Rail Clip, Type “e”, or approve equivalent that meets the following requirements:
    a. Elastic, made of heat-treated alloy spring steel. Use one identical clip on the field and gauge side of the rail at the rail seat.
    b. Reusable after repeated applications without any effect on the operating performance of the rail clip or any possible damage to or loss of the lateral support provided by the embedded shoulder.
    c. No part of rail clip to protrude more than 1-inch below the rail seat surface or into the tie.
    d. Provide clips such that lateral rail movements within the confines of the shoulders will not produce transverse denting, carving, or scoring of the rail base.

e. Provide clip such that longitudinal rail slippage will not produce overstressing, bending, twisting, or other damage to the clips, and will not damage the rail.

f. Installation deflection of rail clip - No less than 3/16-inch.

g. The load deflection curve in the normal loading range shall exhibit a linear behavior establishing the elastic characteristics of the clip.

h. Provide modified versions of the clips supplied by the manufacturer, as necessary to address rail joint areas.

H. Rail Clip Insulator

1. Configuration

   a. Provide keys between the rail clip insulators and the rail fastening hardware to prevent relative motion in any direction.

   b. Cover with the rail clip insulators the full widths of the embedded shoulders.

   c. Except for surfaces in contact with the rail, provide surfaces of the rail clip insulators that are smooth, clearly finished and free of flash. Rail clip insulators shall be free of internal defects and cavities and resistant to ultraviolet rays.

   d. Fabricate rail clip insulators such that the bottom edge of the insulator is in contact with the rail seat pad over the entire length of the insulator after installation of the rail clip.

2. Material: Nylon/Plastic reinforced with 33-percent glass fibers or approved equal. Do not use recycled material.

3. Volume resistivity: 1014 ohm-cm, minimum dry; 1012 ohm-cm minimum at saturation as determined in 2.3.D.4. Measure in accordance with ASTM D257.

4. Water absorption at saturation: 2-percent, maximum. Measure in accordance with ASTM D570.

5. Rockwell hardness: R-95. Measure in accordance with ASTM D785.

6. Dry shear strength: 6500 psi, minimum. Measure in accordance with ASTM D732.

7. Deformation under load: 5-percent, maximum. Measure at 2000 psi and 120 degrees Fahrenheit.

8. Heat aging: Age for ten (10) days at 70-degrees Celsius using ASTM D573 as a guide. Compare properties before and after aging at 70-degrees Celsius. The tensile strength shall not decrease more than 10-percent. Rockwell Hardness shall not change more than five points. No warping, cracking, discoloration or exudation of plasticizer.

9. Weatherometer test: After 1,000 hours with cycled water spray

   a. Yield stress: A minimum of 8,000 psi

   b. Tensile strength: A minimum of 6,000 psi.

I. Embedded Shoulders

1. Malleable iron: Conforming to ASTM A47; or ductile iron conforming to ASTM A536 Grade 60-40-18, or 65-45-12 or approved equivalent.

2. Design embedded shoulder to provide and maintain proper position and alignment of the elastic rail clip, rail clip insulator, tie pad, and rail base.
3. Do not directly anchor embedded shoulder to the pretensioned steel.
4. Provide ragged stem design for embedded shoulder to maximize surface area and pullout resistance.
5. Iron shoulders shall be free of mud, oil, loose rust and other contamination when cast into ties. They shall be rigidly secured in the forms during casting and shall not move within the concrete when the securing device is released.

PART 3 - EXECUTION

3.1 GENERAL REQUIREMENTS

A. All work shall be completed in accordance with AREMA Manual for Railway Engineering and as specified herein.

PART 4 - MEASUREMENT AND PAYMENT

4.1 MEASUREMENT

A. No separate measurement will be made for furnishing rail fasteners.

4.2 PAYMENT

A. Full compensation for furnishing rail fasteners shall be considered as included in the contract price paid per unit for “Procure No. 6 Turnout with Concrete Ties”, and “Procure Steel Crossing with Concrete Ties”, therefore no separate payment will be made.

END OF SECTION

SECTION 34 42 13.22
SWITCH AND LOCK MOVEMENT

PART 1 – GENERAL

1.01 SUMMARY

A. Description: This Section includes the requirements for furnishing M-23A 110 VDC dual control switch and lock movement for the interlocked track switch as shown on the Contract Plans at Switch 141,139, 131 and 133.

B. Related Sections:

1. Section 34 42 13.13 – General Railway Signaling Requirements
2. Section 34 42 13.28 – Block Signaling and Highway Grade Crossing Warning Systems Testing

1.02 REFERENCE STANDARDS

A. American Railway Engineering and Maintenance of Way Association (AREMA):

1. Communications & Signals (C&S) Manual of Recommended Practice

B. Code of Federal Regulations, (CFR) Title 49 Transportation:

1. 49 CFR Part 236: Rules, Standards, and Instructions Governing the Installation, Inspection, Maintenance and Repair of Signal and Train Control Systems, Devices, and Appliances

1.03 SUBMITTALS

A. Submittals shall be made in accordance with Section 3.9, “Submittals,” of the Standard Construction Agreement and General Conditions.

B. Installation drawings showing the tie straps and the mounting details of the switch and lock movement, including the connections to the track switch points. The Contractor shall provide shop drawings of layout and shall provide CADD files for layout.

C. Detailed shop drawings for all layout components. Drawings shall indicate all dimensions and materials specifications.

D. One manual for each switch location, describing the installation, operation and maintenance of the switch and lock movements, plus four manuals for maintenance personnel.

E. Switch and Lock Machine installation and inspection procedure.

1.04 QUALITY ASSURANCE

A. Switch and lock mechanisms shall meet the requirements established by AREMA C&S Manual Part 12.2.1, 12.2.5, 12.2.15 and 12.2.16 where the requirements of the AREMA Specifications do not conflict with any requirements of this Section.

B. The switch and lock movement shall be tested before shipping it to the job site. This factory testing shall be conducted in accordance with the Contractor’s Factory Test Procedure for switch and lock movements. Prior to shipment, a copy of the manufacturer’s certification of factory test shall be submitted to the Engineer.

1.05 STORAGE AND HANDLING

A. Prior to shipment, all parts of the switch and lock movement layout that are not painted, or made of non-corroding material, shall be coated with an approved grease to prevent corrosion. Unused threaded outlets shall be suitably plugged or capped.

B. Switch and lock movements and their component layout parts shall be protected against damage during handling and shall be secured against loss during storage.

PART 2 – PRODUCTS

2.01 MATERIALS

A. Electric Switch and lock movement for non-embedded power switches shall be a Model M-23A with Mechanical Circuit Controller (MCC) right hand switch, right hand point normally closed manufactured by Hitachi or approved equal. All switch and lock movements shall be shipped from the factory with the appropriate mounting configuration. Switch and lock movement configuration shall not be modified in the field without approval of the Engineer. Switch and lock movements shall be mounted on the side of the track as shown on the Contract Plans unless otherwise authorized by the Engineer.

B. Junction Box: Model N349656 manufactured by Hitachi; or approved equal. Junction box shall be furnished with a minimum of 38 AREMA terminals.

C. Front rods shall be hinged type, insulated and adjustable.

D. Lock, detector and front rods shall be insulated. Insulating details shall be bolted and shall conform to AREMA recommended practices.

E. If the switch and lock layouts absolutely require offsets in the rods, then such offsets shall be made during manufacture of the rods.

F. Ample threaded areas shall be provided on each rod to accommodate a wide latitude in operating adjustments.

G. The point detector shall be connected to the facing move closed switch point.

H. Switch and lock movements motor shall be controlled by 3-wire control circuit with a nominal 110 VDC power source.

I. Hand throw lever circuitry shall provide two functions as follows:

   1. Open motor control to remove power from motor and

   2. Independent output direct to logic controller input module to simulate overload timeout.

J. Operating time for the switch machine shall not exceed 5 seconds.

K. Each switch and lock movement shall be supplied with an internal wiring diagram, protected by a plastic laminate and shall be fastened to the underside of the contact compartment cover.

L. Wire terminal binding posts shall be numbered using stencils or other acceptable devices.

M. Junction Box: Each switch and lock movement layout for non-embedded power switches shall include a cast-iron, pedestal-mounted junction box, suitable for terminating the interconnecting wires and cable. Junction box shall be in accordance with the requirements of AREMA C&S Manual Part 14.1.5 and shall be complete with a minimum of thirty-eight (38) AREMA terminals.

N. Miscellaneous Fittings: Furnish all connectors such as threaded nipples, cable clamps and electrical fittings as required for each switch and lock movement layout including 2-inch-diameter flexible conduit and connectors from movement to junction box.

O. Padlocks will be furnished by MTS and shall be installed by the Contractor.

P. Operating Department Switch padlocks shall be installed on dual control hand-throw levers of switch and lock movements.

PART 3 – EXECUTION (NOT USED)

PART 4 – MEASUREMENT AND PAYMENT

4.01 MEASUREMENT

A. “Procure Switch Machine – Hitachi MODEL M23-A” shall be measured for each furnished, as shown on the plans, and approved by the Engineer.

4.02 PAYMENT

A. The contract price paid per unit for “Procure Switch Machine – Hitachi MODEL M23-A” shall include full compensation for furnishing all labor, materials, tools, equipment and incidentals, and for doing all work involved to furnish the switch machines including testing, in accordance with the Plans and as directed by the Engineer.

END OF SECTION

L1714.0-26

Purchase of Wye Special Trackwork for Broadway

ATT 1 - Bid Form

**** Fill in the Green Cells ****

All order must be delivered in a timely manner. MTS has determined that 52 weeks or less from the date of Notice to Proceed (NTP) and/or Purchase Order (PO) is a satisfactory time for delivery. All orders must be delivered complete within this time frame unless otherwise approved by MTS.

Bidder to check one:

X	Yes, I can meet the 52 weeks or less delivery date from date of NTP
	No, I cannot meet the 52 weeks or less delivery date from date of NTP

If no, in how many weeks can you delivery to MTS?

Estimated Quantity	Item Description	Unit Of Measure	Lead Time	Unit Price **	Total Price
4	No. 6 Turnout with Concrete Ties	EA	<52 weeks	$ 195,112.00	$ 780,448.00
4	Switch Machine - Hitachi MODEL M23-A	EA	<52 Weeks	$ 56,347.00	$ 225,388.00
2	Steel Crossing with Concrete Ties	EA	<52 Weeks	$ 421,070.00	$ 842,140.00
1	Spare Materials[1]	LS	<52 Weeks	$ 62,148.00	$ 62,148.00
				Delivery Cost (One-time cost & if applicable)	$ -
				Overall Total (Basis of Award)	**$ 1,910,124.00**
				Tax (7.75%)	$ 148,034.61
				Extended Total	**$ 2,058,158.61**

Footnotes:

1. Spare Materials include:
   - Four (4) pair of 13-foot switch points and matching stock rails for right-hand switch

** Bidders should not include sales tax. MTS will add tax at purchase order issuance.

Costs must be all-inclusive including but not limited to labor, insurance, and all other related costs necessary to purchase and deliver the goods to MTS.

Lead times identify the date MTS can anticipate the receipt of the items. MTS reserves the right to consider the lead time in award.

In order to be considered responsive, Bidders must provide pricing on all the line items. Charges not described on the bid form will not be considered valid and MTS will not pay additional costs. Bidder accepts responsibility for accuracy and presentation of the above numbers and must complete the bid forms as provided. Failure to do so may deem the bid non-responsive.

Agenda Item No. 19

MEETING OF THE SAN DIEGO METROPOLITAN TRANSIT SYSTEM
BOARD OF DIRECTORS

July 30, 2026

SUBJECT:

Downtown Parallel Feeder and Street Trackage Replacement – Work Order Amendment

RECOMMENDATION:

That the San Diego Metropolitan Transit System (MTS) Board of Directors authorize the Chief Executive Officer (CEO) to execute Amendment No. WOA354-AE-59.01 under MTS Doc. PWL354.0-22 (in substantially the same format as Attachment A), with Mott McDonald (MM), in the amount of $265,817.87 for the additional engineering services needed for the special track replacement at Park Boulevard and K Street and Park Boulevard and L Street as part of the Downtown Parallel Feeder and Street Trackage Replacement Project.

Budget Impact

The total cost of this amendment is estimated to be $265,817.87, and the total contract cost, (inclusive of the total costs for this Amendment 1), is estimated to be $2,661,632.10 Under contract MTS Doc. PWL354.0-22. The project will be funded by Capital Improvement Program (CIP) 2006114701 – Downtown Parallel Feeder & Street Trackage Replacement.

DISCUSSION:

The Trolley system is electrically powered, and the vehicles connect to a contact wire system above the train, called the Overhead Catenary System (OCS). The power is transferred to the OCS via feeder cables. The feeder cables are aerial along most of the system; however, in the downtown area (along C Street, Park Blvd., and Commercial Street), the feeder cables run parallel to the tracks under the street and are connected to the overhead contact wire via conduits along the catenary poles. The downtown area feeder cables are over forty (40) years old and are overdue for replacement.

On May 12, 2022 (Agenda Item (AI) 7), the Board authorized a design work order, WOA1951-AE-75, under MTS Doc. No G1951.0-17 with MM, a firm on MTS's previous on-call A&E bench that was procured jointly with San Diego Association of Governments (SANDAG) in 2017 using a Request for Qualifications (RFQ) process. The work order scope included a visual field investigation, a load flow analysis to assess the existing and proposed conditions of train power systems, and a design to replace cables in areas where the existing system could not meet the demand of future Trolley operations. The field investigation work resulted in concerns with the reuse of the existing conduit: many are cracked and/or waterlogged. The load flow study results

San Diego Metropolitan Transit System (MTS) is a California public agency comprised of San Diego Transit Corp., San Diego Trolley, Inc. and San Diego and Arizona Eastern Railway Company (nonprofit public benefit corporations). MTS member agencies include the cities of Chula Vista, Coronado, El Cajon, Imperial Beach, La Mesa, Lemon Grove, National City, Poway, San Diego, Santee, and the County of San Diego. MTS is also the For-Hire Vehicle administrator for multiple cities in San Diego County.

recommended an increase in the number of parallel feeder cables, from 2 to 3 (per track for a total of 6), which requires additional conduit space beyond the original duct back system in the ground today. Due to the results of the initial field investigation and the load flow study, the team could not complete the design as originally scoped. With re-use of the existing conduit system no longer possible, the team evaluated running the new feeder cables overhead. This option was also eliminated as the existing OCS poles are not rated for the extra load. A second set of poles would be needed in the already congested downtown corridor to carry 6 additional cables. The team determined this option would create an eyesore in the downtown corridor.

On May 16, 2024 (AI 18), the Board authorized work order, WOA354-45, under MTS Doc. No. PWL354.0-22 with MM to conduct underground utility investigations in the downtown area to understand where additional conduit could be installed. MM utilized Ground Penetrating Radar (GPR) scans in addition to non-invasive camera surveys. The result of this study assisted the team in understanding the best path for a new conduit through this corridor, providing the team with enough alignment information to develop a scope of work for final design.

On November 20, 2025 (AI 13), the Board approved a new work order, WOA354-AE-59, with MM to provide engineering design services for the Downtown Parallel Feeder and Street Trackage Replacement Project. During the design development process, MTS has identified the need to incorporate additional improvements at the intersections of Park Boulevard and K Street and Park Boulevard and L Street. These locations contained aging special trackwork that has reached the end of its useful life and require replacement to maintain the long-term safety, reliability, and operational performance of the light rail system.

Today's proposed action expands the original scope of services to include the engineering design, coordination, procurement support, and implementation planning necessary to replace the existing special trackwork at both locations. The additional work includes project management and coordination, supplemental field survey and site investigation, utility verification, preparation of construction documents, cost estimating, construction staging plans, procurement support, bid support services, and shop drawing review. The design will include replacement of four No. 6 turnouts, new welded crossover assemblies, reconstruction of the existing track structure, coordination with the overhead catenary system, and development of construction sequencing to support efficient implementation while minimizing impacts to rail operations.

The proposed improvements will allow MTS to package the Park Boulevard and K Street and Park Boulevard and L Street trackwork into the overall Downtown Parallel Feeder and Street Trackage Replacement Project, providing a coordinated design approach and improving construction efficiency. Incorporating this work into the existing design effort will reduce future construction costs, minimize service disruptions by consolidating construction activities, and improve the long-term maintainability and reliability of the rail infrastructure.

The Work Order and amendments are summarized below:

Work order No.	Purpose	Amount	Board Approval Date
WOA1951-AE-75	Field investigation, load flow analysis, and design to replace cables.	$348,521.30	5/12/2022, Agenda Item 07 - Board Approval
WOA1951-AE-75.01	No cost time extension.	$0.00	CEO Approval on 5/10/2023

Work order No.	Purpose	Amount	Board Approval Date
WOA1951-AE-75.02	No cost time extension.	$0.00	CEO Approval on 9/28/2023
WOA354-AE-45	Conduct underground utility investigations	$280,758.68	5/16/2024, Agenda Item 18 - Board Approval
WOA354-AE-59	Original Work Order	$1,766,534.25	11/20/2025, Agenda Item 13 – Board approval
WOA354-AE-59.01	Amendment 1 – Add design services	$265,817.87	Today's proposed action
	Total	$2,661,632.10	

Fair & Reasonable Price Determination
Based on the level of effort and proposed classifications for the additional services, MM's proposed amendment amount of $265,817.87 was determined to be fair and reasonable.

For this project, MM will utilize the following subconsultant:

Subconsultant Name	Subconsultant Certification	Subconsultant Amount
Aguirre & Associates	Small Business (SB)	$38,436.40

Therefore, staff recommends that the MTS Board of Directors authorize the CEO to execute Amendment No. WOA354-AE-59.01 under MTS Doc. PWL354.0-22 (in substantially the same format as Attachment A), with MM, in the amount of $265,817.87 for the additional engineering services needed for the special track replacement at Park Blvd. and K St., and Park Blvd. and L St. as part of the Downtown Parallel Feeder and Street Trackage Replacement Project.

/s/ Sharon Cooney
Sharon Cooney
Chief Executive Officer

Key Staff Contact: Julia Tuer, 619.557.4515, Julia.Tuer@sdmts.com

Attachments: A. Draft Work Order Amendment, MTS Doc No. PWL354.0-22, WOA354-AE-59.01

Metropolitan Transit System

July 30, 2026

MTS Doc. No. PWL354.0-22
Work Order No. WOA354-AE-59.01

Andrew Muth, PE
Vice President
Mott MacDonald, LLC
401 B Street, Suite 1520
San Diego, CA 92101

Dear Mr. Muth:

Subject: WORK ORDER AMENDMENT NO. 1 TO WOA354-AE-59, TO MTS DOC. NO. PWL354.0-22, GENERAL ENGINEERING SERVICES FOR DESIGN SERVICES FOR DOWNTOWN PARALLEL FEEDER AND STREET TRACKAGE REPLACEMENT

This letter shall serve as Amendment No. 1 to our agreement for Work Order WOA354-AE-59 to MTS Doc. No. PWL354.0-22, for engineering services for Downtown Parallel Feeder and Street Trackage Replacement.

SCOPE OF SERVICES

As a result of this Amendment, the Scope of Services shall be revised to include additional engineering services for the special track replacement at Park Blvd. and K St. and Park Blvd. and L St. (Attachment A). Federal terms do not apply.

SCHEDULE

As a result of this Amendment, the Schedule shall be increased by three (3) months for a period of twenty-eight (28) months from the date of the Notice to Proceed, or until August 20, 2027.

PAYMENT

As a result of this Amendment, the Payment shall be increased by $265,817.87 (Attachment B). The revised Payment shall be based on actual costs in the not to exceed amount of $2,032,352.12. Payment shall not be exceeded without prior authorization of MTS.

DRAFT

Please sign below, and return the document to the Contracts Specialist at MTS. All other terms and conditions shall remain the same and in effect.

Sincerely,

Sharon Cooney
Chief Executive Officer

Accepted:

Andrew Muth, PE, Vice President
Mott MacDonald, LLC

Date: _____

Attachments: A. Scope of Services
B. Negotiated Fee Proposal

DRAFT

ATTACHMENT A
SCOPE OF SERVICES

DRAFT

TITLE: Downtown Parallel Feeder and Street Trackage Replacement – Amendment 1 **WOA #:** 354-AE-59.01

I. PROJECT DESCRIPTION

This Amendment supplements the original Work Order scope by adding additional professional services required to support the design, coordination, procurement, and implementation of special trackwork improvements at Park Blvd & K Street and Park Blvd & L Street, along with associated project support services.

II. SCOPE OF WORK

The scope of work shall consist of the following tasks and deliverables:

Task 3 – Field Survey and Investigation:

Supplemental survey and field verification services are required to support the Park & K / Park & L trackwork design.

3.1.1 Supplemental Field Survey

The Consultant shall perform additional topographic and field survey services within the turnout and crossover limits, including verification of track geometry, mapping of overhead catenary system poles and foundations, and documentation of adjacent civil features impacting design. Services shall also include providing dedicated survey control and documentation specific to the Park & K and Park & L special trackwork footprint, including turnout condition assessments, concrete tie verification, and confirmation of hardpan depth where required to support reconstruction design.

3.2.1 Site Investigation

The Consultant shall conduct site visits and field investigations to document existing conditions, perform constructability assessments, and validate infrastructure interfaces affecting the amendment scope.

3.3.1 Utility Verification (If Required)

The Consultant shall perform limited utility records review and field verification, including potholing if necessary, to confirm the location of underground facilities that may conflict with proposed improvements.

Task 4.9 Park & K and Park & L – Design and Cost Estimate Services

New additional subtasks will be added:

4.9.1 Special Trackwork Design:

The Consultant shall develop design documents for four (4) No. 6 turnouts at Park Blvd & K Street and Park Blvd & L Street, including removal and replacement on concrete ties and specification of 115RE special trackwork consistent with current MTS standards. Services shall include coordination with procurement requirements to support material acquisition and fabrication of special trackwork components.

4.9.2 Crossover Design:

The Consultant shall design replacement crossovers utilizing welded assemblies to minimize mechanical joints, improve long-term operational performance, and support constructability and installation sequencing

DRAFT

4.9.3 Track Reconstruction Design:
The Consultant shall prepare design plans for removal of existing turnout and adjoining trackwork, excavation of existing track structure to hardpan subgrade, and reconstruction utilizing new track components, fastening systems, and structural track elements. Design shall account for in-kind replacement limits and interface with adjacent track infrastructure.

4.9.4 Systems Coordination and Installation Support:
The Consultant shall provide design coordination and installation support services associated with the special trackwork footprint, including interface with the existing overhead catenary system (OCS) to minimize rework, maintain service continuity, and support construction staging and implementation planning.

4.9.5 Cost Estimating:
The Consultant shall prepare detailed construction and procurement cost estimates associated with the amendment scope, including material procurement, fabrication, and installation costs.

Task 5.1 – Supplemental Construction Staging and Work Plans for Park & K and Park & L:

The Consultant shall develop construction staging and sequencing plans specific to the Park & K and Park & L improvements as part of the overall construction staging plan for the project.

Task - 6.1 - Supplemental Bid Support and Shop Drawing Review for Park & K and Park & L:

The Consultant shall provide procurement support services including responding to bidder inquiries, preparing technical clarifications, supporting addenda development if required, and reviewing shop drawings for turnouts, crossovers, and associated special trackwork components. Coordination with manufacturers and fabricators shall also be performed to ensure compliance with project specifications

III. DELIVERABLES:

Milestone/Deliverable	Due Date
3.1.1 Supplemental Field Survey	NTP + 8 months
3.2.1 Site Investigation	NTP + 8 months
3.3.1 Utility Verification (If Required)	NTP + 8 months
4.9.1 Special Trackwork Design:	
50% Submittals	NTP + 12 months
95% Submittals	NTP + 16 months
100% Submittals	NTP + 18 months
5.1 – Supplemental Construction Staging	
95% Submittals	NTP + 14 months
100% Submittals	NTP + 16 months
6.1 – Supplemental Procurement and Bid Support	
Advertise for Construction	NTP + 12 months
Bid Support	NTP + 18 months

DRAFT

IV. AMENDMENT 1 CLARIFICATIONS

1. No additional duct bank design required under this amendment.
2. No impact envisaged to the existing #15 switch south of Park & L crossover. It is assumed that the new crossover can be installed with no impact to the abutting turnout.
3. No new sectionalizing required to allow isolation of 12th & Imperial OCS run.
4. Assume it is possible to install track like-for-like so there is no expected design implication for OCS. Contractor to undertake an acceptance survey prior to construction.
5. Assume 9no. shop drawings total across scope.
6. No allowance has been made for utility relocation. Allowance has been made for review of utility as-builts and an allowance of $20k has been allowed for potential potholes required as a result of the utility as-built review.
7. As discussed in meeting held 05/28/26 identification of existing hardpan and ties are not required. 9-12" ballast depth before hardpan to be assumed and new ties to be specified as per current standard.
8. As discussed in meeting held 05/28/26, undertrack drain under Park & L crossover is believed to be in place and clogged. Existing drain replacement to be designed under special trackwork area and to tie into existing drain at southern design extent. It is assumed that this is a renewal of an existing system only and no coordination with the City or other third parties will be required.
9. As discussed in meeting held 05/28/26, the special trackwork scope in amendment 1 will form its own separate bid package. Currently under this contract there are 3 bid packages total allowed for, 1 main bid package, 1 early procurement package for no. 6 crossover on C St and this bid package covering Park & K and Park & L crossovers.
10. Plain line track between the crossovers is to remain in place including pedestrian grade crossing. Renewal to be limited to special trackwork only +20 feet where achievable.
11. It is assumed that no. 6 crossovers with 11 foot track centers will be suitable for the replacement of both existing crossover and these will be identical to the C St special trackwork in the existing scope. This will allow MM to make efficiencies in design and only one set of special trackwork drawings will be produced (as part of main work scope). Design drawings will refer back to this drawing for detail.
12. It is assumed that all three pieces of special trackwork (C St and the two on Park Blvd in this scope) will be manufactured by the same supplier and a efficiencies have been made in the bid support and shop drawing review.

DRAFT

ATTACHMENT B
NEGOTIATED FEE PROPOSAL

DRAFT

Work Order Estimate Summary

MTS Doc. No.	**PWL354.0-22**
Work Order No.	**WOA354-AE-59.01**
Attachment:	**B**

Work Order Title: **Downtown Parallel Feeder and Street Trackage Replacement – Amendment 1**

Project No:

Table 1 - Cost Codes Summary (Costs & Hours)

Item	Cost Codes	Cost Codes Description	Total Costs
1		Downtown Parallel Feeder and Street Trackage Replacement – Amendment 1	$265,817.87
2			
		Totals =	**$265,817.87**

Table 2 - TASKS/WBS Summary (Costs & Hours)

Item	TASKS/WBS	TASKS/WBS Description	Labor Hrs	Total Costs
1	3	Field Survey and Investigation	310.0	$86,890.96
2	4	Design and Cost Estimate Services	584.0	$120,670.64
3	5	Construction Staging and Work Plans	172.0	$34,837.92
4	6	Procurement Bid Support and Shop Drawing Review	95.5	$23,418.35
5				
		Totals =	**1,161.5**	**$265,817.87**

Table 3 - Consultant/Subconsultant Summary (Costs & Hours)

(If Applicable, Select One)				Consultant	Labor Hrs	Total Costs
DBE	DVBE	SBE	Other			
				Mott MacDonald Group, Inc.	979.5	$227,381.47
X				Aguirre	182.0	$38,436.40
				Totals =	**1,161.5**	**$265,817.87**

DRAFT

Work Order Estimate Summary

Consultant/Subconsultant: **Mott MacDonald Group, Inc.**

Total Hours = **980**

Total Costs = **$227,381.47**

Work Order Title: **Downtown Parallel Feeder and Street Trackage Replacement – Amendment 1**

Item	TASKS/WBS	TASKS/WBS Description	ODCs (See Attachment)	Contract Manager	Engineer - Senior	Engineer - Principal	Project Controls - 3	Task Manager	Designer - 2	Designer - 1	CADD - 2	Project Controls - Senior	Admin - 1	Admin - 3	Total Hours	Totals
				$ 409.22	$ 295.54	$ 355.79	$ 211.61	$ 261.07	$ 164.83	$ 143.24	$ 154.95	$ 292.87	$ 112.35	$ 152.77		
3	Task 3	Field Survey and Investigation														
3.1.1	Supplemental Field Survey		$400.00	4		2	4	16	4					8	38	$9,653.50
3.2.1	Site Investigation					4		8	16	12					40	$7,867.88
3.3.1	Utility Verification		$20,000.00			2		24	24						50	$30,933.18
		Subtotals (Hours) =	N/A	4		8	4	48	44	12				8	128	$48,454.56
		Subtotals (Costs) =	$20,400.00	$1,636.88		$2,846.32	$846.44	$12,531.36	$7,252.52	$1,718.88				$1,222.16	**128**	**$48,454.56**
4	Task 4	Design and Cost Estimate Services														
4.9	Park & K and Park & L															
4.9.1	Special Trackwork Design							3	8						11	$2,101.85
4.9.2	Crossover Design							3	8						11	$2,101.85
4.9.3	Track Design			4		20		60	80		80			8	252	$51,221.44
4.9.4	Systems Coordination and Installation Support				32	4		8	8	20					72	$17,152.44
4.9.5	Cost Estimating					8		8	30			32			78	$19,251.62
4.9.6	Drainage design					12		8	80		60				160	$28,841.44
		Subtotals (Hours) =	N/A	4	32	44		90	214	20	140	32		8	584	$120,670.64
		Subtotals (Costs) =		$1,636.88	$9,457.28	$15,654.76		$23,496.30	$35,273.62	$2,864.80	$21,693.00	$9,371.84		$1,222.16	**584**	**$120,670.64**
5	Task 5	Construction Staging and Work Plans														
5.1	Supplemental Construction Staging and Work Plans for Park & K			4	8	8		40	48	24	40				172	$34,837.92
		Subtotals (Hours) =	N/A	4	8	8		40	48	24	40				172	$34,837.92
		Subtotals (Costs) =		$1,636.88	$2,364.32	$2,846.32		$10,442.80	$7,911.84	$3,437.76	$6,198.00				**172**	**$34,837.92**
6	Task 6	Procurement Bid Support and Shop Drawing Review														
6.1	Supplemental Bid Support and Shop Drawing Review for Park & K			4	8	16		27	41						96	$23,418.35
		Subtotals (Hours) =	N/A	4	8	16		27	40.5						96	$23,418.35
		Subtotals (Costs) =		$1,636.88	$2,364.32	$5,692.64		$7,048.89	$6,675.62						**96**	**$23,418.35**
		Totals (Summary) =													**980**	**$227,381.47**
		Total (Hours) =	N/A	16	48	76	4	205	347	56	180	32		16	980	
		Total (Costs) =	$20,400.00	$6,547.52	$14,185.92	$27,040.04	$846.44	$53,519.35	$57,113.60	$8,021.44	$27,891.00	$9,371.84		$2,444.32		$227,381.47
		Percentage of Total (Hours) =	N/A	2%	5%	8%	0%	21%	35%	6%	18%	3%		2%	100%	
		Percentage of Total (Costs) =	9%	3%	6%	12%	0%	24%	25%	4%	12%	4%		1%		100%

DRAFT

Work Order Estimate Summary

Consultant/ Subconsultant: **Mott MacDonald Group, Inc.**

Work Order Title: **Downtown Parallel Feeder and Street Trackage Replacement – Amendment 1**

TASKS/WBS (1-5)

ODC Item	Description	Unit	Unit Cost	Task 1		Task 2		Task 3		Task 4		Task 5	
				Quantity	Total	Quantity	Total	Quantity	Total	Quantity	Total	Quantity	Total
1	Hotel site visit	1	$250.00	1	$250.00								
2	Travel site visit	1	$150.00	1	$150.00								
3	USI - Pothole ROW permit	1	$10,000.00	1	$10,000.00								
4	USI - Pothole	1	$2,000.00	5	$10,000.00								
5													
6													
7													
8													
9													
10													
			Subtotal =		**$20,400.00**	Subtotal =		Subtotal =		Subtotal =		Subtotal =	

TASKS/WBS (6-10)

ODC Item	Description	Quantity	Total	Quantity	Total	Quantity	Total	Quantity	Total	Quantity	Total	Totals Quantity	Totals Total
1	Hotel site visit											**1**	**$250.00**
2	Travel site visit											**1**	**$150.00**
3	USI - Pothole ROW permit											**1**	**$10,000.00**
4	USI - Pothole											**5**	**$10,000.00**
5													
6													
7													
8													
9													
10													
		Subtotal =		Subtotal =		Subtotal =		Subtotal =		Subtotal =		**Totals =**	**$20,400.00**

DRAFT

Work Order Estimate Summary

Consultant/Subconsultant: **Aguirre**

Total Hours = **182**

Total Costs = **$38,436.40**

Work Order Title: **Downtown Parallel Feeder and Street Trackage Replacement – Amendment 1**

Item	TASKS/WBS	TASKS/WBS Description	ODCs (See Attachment)	Chainman (Prevailing Wage)	Party Chief (Prevailing Wage)	Surveyor - 3	Surveyor - Sr							Total Hours	Totals
				$ 251.16	$ 258.56	$ 130.32	$ 189.02	$ -	$ -	$ -	$ -	$ -	$ -		
3	**Task 3**	**Field Survey and Investigation**													
3.1.1	Supplemental Field Survey		$5.00	52	52	48	30							182	$38,436.40
		Subtotals (Hours) =	N/A	52	52	48	30							182	$38,436.40
		Subtotals (Costs) =	$5.00	$13,060.32	$13,445.12	$6,255.36	$5,670.60							**182**	**$38,436.40**
		Totals (Summary) =												**182**	**$38,436.40**
		Total (Hours) =	N/A	52	52	48	30							182	
		Total (Costs) =	$5.00	$13,060.32	$13,445.12	$6,255.36	$5,670.60								$38,436.40
		Percentage of Total (Hours) =	N/A	29%	29%	26%	16%							100%	
		Percentage of Total (Costs) =	0%	34%	35%	16%	15%								100%

DRAFT

Work Order Estimate Summary

Consultant/ Subconsultant: **Aguirre**

Work Order Title: **Downtown Parallel Feeder and Street Trackage Replacement – Amendment 1**

TASKS/WBS (1-5)

ODC Item	Description	Unit	Unit Cost	Task 1		Task 2		Task 3		Task 4		Task 5	
				Quantity	Total	Quantity	Total	Quantity	Total	Quantity	Total	Quantity	Total
1	Corner Record Fee	EA	$5.00	1	$5.00								
2													
3													
4													
5													
6													
7													
8													
9													
10													
			Subtotal =		**$5.00**	Subtotal =		Subtotal =		Subtotal =		Subtotal =	

TASKS/WBS (6-10)

ODC Item	Description											Totals	
		Quantity	Total	Quantity	Total	Quantity	Total	Quantity	Total	Quantity	Total	Quantity	Total
1	Corner Record Fee											**1**	**$5.00**
2													
3													
4													
5													
6													
7													
8													
9													
10													
		Subtotal =		Subtotal =		Subtotal =		Subtotal =		Subtotal =		**Totals =**	**$5.00**

DRAFT

Metropolitan Transit System

Agenda Item No. 20

MEETING OF THE SAN DIEGO METROPOLITAN TRANSIT SYSTEM
BOARD OF DIRECTORS

July 30, 2026

SUBJECT:

Proposed Revisions to San Diego Metropolitan Transit System (MTS) Board Policy No. 35 "Drug and Alcohol Policy"

RECOMMENDATION:

That the San Diego Metropolitan Transit System (MTS) Board of Directors approve the proposed revisions to Board Policy No. 35 "Drug and Alcohol Policy" (Attachment A).

Budget Impact

None with this action.

DISCUSSION:

The Federal Transit Administration ("FTA") requires recipients of federal financial assistance, including San Diego Transit Corporation (SDTC), San Diego Trolley, Inc. (SDTI), and MTS, to maintain a drug and alcohol policy that complies with 49 CFR Parts 40 and 655. MTS is also required to maintain a Drug-Free Workplace Program in accordance with the Drug-Free Workplace Act of 1988.

MTS periodically updates its Drug and Alcohol Policy to ensure continued compliance with applicable laws and regulations. The attached revised Board Policy No. 35 incorporates MTS's Drug-Free Workplace Act policy statement, which was previously maintained as a separate policy, includes revisions requested during a recent FTA compliance audit, and updates titles and other administrative references.

FTA regulations require the governing board of each recipient to approve its drug and alcohol policy. Today's action would revise Board Policy No. 35 to incorporate the changes described above.

Therefore, staff recommends that the MTS Board of Directors approve the proposed revisions to Board Policy No. 35 "Drug and Alcohol Policy" (Attachment A).

/s/ Sharon Cooney
Sharon Cooney
Chief Executive Officer

Key Staff Contact: Julia Tuer, 619.557.4515, Julia.Tuer@sdmts.com

Attachment: A. Draft Board Policy No. 35 – with redline track changes

Metropolitan Transit System

Policies and Procedures No. 35

BOARD APPROVAL: ~~5/12/22~~7/30/2026

SUBJECT:

DRUG AND ALCOHOL POLICY AND DRUG-FREE WORKPLACE ACT POLICY STATEMENT

I.

PURPOSES

1255 Imperial Avenue, Suite 1000, San Diego, CA 92101-7490 • (619) 231-1466 • sdmts.com

San Diego Metropolitan Transit System (MTS) is a California public agency comprised of San Diego Transit Corp., San Diego Trolley, Inc. and San Diego and Arizona Eastern Railway Company (nonprofit public benefit corporations). MTS member agencies include the cities of Chula Vista, Coronado, El Cajon, Imperial Beach, La Mesa, Lemon Grove, National City, Poway, San Diego, Santee, and the County of San Diego. MTS is also the For-Hire Vehicle administrator for multiple cities in San Diego County.

1255 Imperial Avenue, Suite 1000, San Diego, CA 92101-7490 • (619) 231-1466 • sdmts.com

San Diego Metropolitan Transit System (MTS) is a California public agency comprised of San Diego Transit Corp., San Diego Trolley, Inc. and San Diego and Arizona Eastern Railway Company (nonprofit public benefit corporations). MTS member agencies include the cities of Chula Vista, Coronado, El Cajon, Imperial Beach, La Mesa, Lemon Grove, National City, Poway, San Diego, Santee, and the County of San Diego. MTS is also the For-Hire Vehicle administrator for nine cities.

~~A.~~ To maintain a safe and efficient public transportation system;

~~B.~~ To maintain a safe, healthy working environment for all employees;

~~C.~~ To reduce the incidence of accidental injury to person or property;

~~D.~~ To reduce absenteeism, tardiness and indifferent job performance;

E. To maintain a work environment free of alcohol and drug related performance problems, accidents and injuries; ~~and~~

F. To comply with the Federal Transit Administration ("FTA") regulations on prevention of prohibited drug use and alcohol misuse in transit operations, 49 C.F.R. ~~Parts 655 and 40 and the Drug Free Workplace Act of 1988.~~Part 655, the U.S. Department of Transportation ("DOT) regulations on procedures for transportation workplace drug and alcohol testing programs, 49 C.F.R. Part 40; and,

G. To comply with The Drug-Free Workplace Act of 1988 by maintaining a drug-free workplace.

II.

APPLICATION OF POLICY

This policy applies to applicants and employees of the San Diego Metropolitan Transit System's ("MTS") operating entities, San Diego Trolley, Inc. ("MTS Rail or SDTI") and San Diego Transit Corporation ("MTS Bus" or "SDTC") [MTS, SDTI and SDTC are collectively referred to as "the Agency"], and to certain contract personnel who have been notified of the applicability of this policy to their work and contractors who have chosen to incorporate this policy as their own based on contractual agreement with the Agency. The word "employee" as used in this policy includes all such designated personnel including contract employees. This policy also applies to employees of the Metropolitan Transit System who work in the positions listed below and/or perform safety-sensitive functions as defined below.

FTA is an agency within the DOT. References in this policy to "DOT" and "FTA" drug and alcohol testing requirements are used interchangeably, and are meant to recognize both the DOT and FTA requirements, as FTA regulations establish when testing is required for transit agencies and DOT regulations establish the procedures governing the testing process.

Some of the drug and alcohol testing and procedures required in this policy are mandated by FTA regulations preventing prohibited drug use and alcohol misuse in transit operations, 49 C.F.R. Parts 655 and 40. The drug testing and alcohol testing mandated by FTA is applicable to "safety-sensitive employees" of the Agency, which includes those who:

1. Operate revenue service vehicles, including when such vehicles are not in revenue service;

2. Operate a non-revenue service vehicle, when such vehicle is required to be operated by a holder of a Commercial Driver's License;

3. Control dispatch or movement of a revenue service vehicle;

4. Maintain a revenue service vehicle or equipment used in revenue service;

5. Security personnel who carry firearms; and

6. Supervisors of the aforementioned employees since these supervisors may perform safety-sensitive duties.

The Agency has reviewed the actual duties performed by employees and determined that the following jobs functions may require the performance of safety-sensitive duties:

MTS Rail

Train Operator, Electromechanic, Linemen, Assistant Linemen, Track Serviceperson, LRV Maintainers, Wayside Maintainers, Serviceperson, Construction Safety Flagperson, Construction Safety Supervisor, Controller, ~~Superintendent~~Director and ~~Assistant Superintendent~~Manager of Transportation, Central Control Supervisor, Assignments Supervisor, All Training ~~Coordinator/Supervisor~~Coordinators and Supervisors, Transportation Supervisor, ~~Superintendent and Assistant Superintendent~~Communications/Operations Supervisor, Director and Manager of LRV Maintenance, LRV Maintenance Supervisor, ~~Superintendent and Assistant Superintendent of~~ LRV Project Coordinator, Revenue Maintainers and Supervisors, Director and Manager of MOW, Track Supervisor, Manager of Track and Structure, ~~Superintendent~~Director of Facilities, Facilities Manager, Assistant Manager of Facilities, Facilities Supervisor, System Safety Specialist and System Safety Manager.

MTS Bus

Bus Operators (student and part-time included), Service Operations Supervisors, all hourly Maintenance employees, Maintenance Manager, Maintenance Training Supervisor, Assistant Maintenance Managers, Maintenance Foremen, Quality Assurance Manager/ Asst. Manager, Quality Assurance Supervisor, Dispatchers, Dispatch Clerks, Communications/Operations Supervisors, Operations Trainer, Maintenance Instructor, Manager/Asst. Manager Transportation Communication and Technology, Manager of Transportation, ~~Assistant~~ Transportation Division Managers, Senior Transportation Supervisor, Manager of Service Operations, Director of Transportation and Director of Fleet and Facility Maintenance, Manager of Training, Part Time Training Instructor, Safety Manager, Facilities Manager, and Facilities Foremen.

MTS Security

Director of Transit Security and Passenger Safety, Deputy Director of Transit Enforcement, Professional Standards Manager ~~of Transit Field Operations – Transit Enforcement, Asst.~~ , Manager of Field Operations ~~– Transit Enforcement~~, Asst. Manager of Field Operations, Code Compliance Investigator, Code Compliance Supervisor, Code Compliance Inspector, and all contract officers or supervisors of contract security officers who carry firearms regardless of title or rank.

The drug and alcohol testing required by this policy for employees who are not safety-sensitive employees as defined above is required by the Agency, not the FTA. This policy specifies which testing is mandated by FTA and which is required by the Agency.

Upon implementation, this policy supersedes all previously issued Drug and Alcohol Policies for SDTC, SDTI and MTS.

III.

ILLEGAL DRUGS, LEGAL DRUGS AND ALCOHOL

A. Illegal Drugs

~~The sale, offer to sell, purchase, use,~~MTS policy prohibits the unlawful manufacture, ~~transfer or~~ distribution, dispensing, possession ~~of~~or use of a controlled substance or illegal drugs while on Agency business or on Agency premises, property or vehicles ~~is prohibited~~. Further, no employee shall bring drug paraphernalia onto Agency premises or property or into company vehicles. Violation of these rules will result in disciplinary action, up to and including termination; termination is likely for any violation, even a first offense.

Illegal drug means any drug (a) which is not legally obtainable or (b) which is legally obtainable but has not been legally obtained. The term includes marijuana, cocaine, opioids (codeine, morphine, heroin, semi-synthetic opioids), phencyclidine[" PCP"], and amphetamines (amphetamine, methamphetamine, MDMA, MDA). Regardless of any State laws protecting the medicinal or recreational use of Marijuana, federal regulations forbid its use by safety-sensitive employees, and Agency policy forbids its use for all other employees. The term also includes prescribed drugs not legally obtained, prescribed drugs not being used for prescribed purposes and any substance which a person holds out or represents to another as an illegal drug.

B. Legal Drugs

~~The~~Agency policy (not FTA regulations) prohibits the use of legal drugs at a level, or in a manner, combination or quantity which impedes an employee's ability to perform ~~his~~their job. Such use is prohibited and will lead to disciplinary action, up to and including termination. ~~Agency policy (not FTA regulations) also deems failure~~Failure to report the use of legal drugs per the procedure described below as a violation of ~~this~~Agency policy that will result in discipline up to and including termination of employment.

It is the employee's responsibility to ~~insure~~ensure that any legal drug(s) they are taking allow them to safely perform their duties. Employees have an affirmative obligation to report any drug or medication which they are taking to their immediate supervisor, using the "Prescription Drug Notification Form", or in their supervisor's absence, directly to the Director of Human Resources, so that a determination can be made by the company's physicians as to the ability of the employee to perform their particular job safely while using that drug or combination of drugs. If, after consulting with its physicians, the Agency has determined that the employee does not pose a threat to his or her own safety, public safety, or the safety of coworkers, and that the employee's job performance will not be significantly affected by the legal drug, the employee may continue to work while taking that particular legal drug. Any employee using a prescription drug must provide the prescription and the medication itself (if requested) to the designated Agency medical facility as soon as possible (but in any case within 24 hours) after notification by Agency management or its physicians.

C. Alcohol

~~No employee shall consume~~On-Duty Alcohol Use. Agency policy (not FTA regulations) prohibits all employees from consuming alcoholic beverages in Agency vehicles, on Agency

premises or property~~, within four hours before performing safety-sensitive functions~~, while on Agency business, or while in uniform. Violation of these rules will result in disciplinary action, up to and including termination, even for a first offense.

Pre-Duty Alcohol Use. Agency policy and FTA regulations prohibit an employee from consuming alcohol within four hours of performing safety sensitive functions. Pursuant to Agency policy (not FTA regulations), any employee who consumes alcohol within four hours of a scheduled work shift is deemed unfit for duty. Violation of these rules will result in disciplinary action, up to and including termination, even for a first offense.

On-Call Employees. No employee who is on-~~-~~call and therefore subject to being called into work shall consume alcohol within four hours of or during those on-~~-~~call hours. In the event such an employee is called and must report for duty, the employee has the opportunity to acknowledge that they have used alcohol and therefore are not able to perform their safety-sensitive function. In such a case, that employee shall not be required to perform work, but may be disciplined for the use of alcohol during on~~-call hours based on Agency policy (not FTA regulations).~~ -call hours based on Agency policy (not FTA regulations). FTA regulations permit an employer to allow a covered employee who acknowledges consuming alcohol, but claims to be able to perform a safety-sensitive function, to undergo an alcohol test to determine whether the employee may perform safety-sensitive duties. However, pursuant to Agency policy (not FTA regulations), the Agency has enacted a zero-tolerance policy for any violations of the rule prohibiting alcohol use during the prohibited on-call period. Therefore, an employee who acknowledges consuming alcohol during the prohibited period is deemed unfit for duty. Accordingly, the Agency will not administer such a test or permit the employee to perform safety-sensitive functions. Violation of these rules will result in disciplinary action, up to and including termination, even for a first offense.

Alcohol Test Results of 0.02 Percent or Greater. FTA regulations mandate that employees with a breath-alcohol concentration between 0.02 percent and 0.039 percent not be allowed to perform any safety-sensitive function until the start of the employee's next regularly scheduled duty period that is at least eight hours following the administration of the alcohol test. The Agency's policy is that any employee who is tested for alcohol and has a breath-alcohol content of 0.02 percent or greater will be terminated, even for a first offense.

IV.

PROHIBITION AGAINST EMPLOYEES HAVING ILLEGAL DRUGS OR ALCOHOL IN THEIR BODIES DURING WORKING TIME

~~All~~FTA regulations prohibit employees ~~must report for work with no illegal drugs or their metabolites or alcohol in their bodies. Employees must not have~~who perform safety-sensitive functions from consuming marijuana, cocaine, opioids, amphetamines, and phencyclidine at all times. MTS Policy prohibits employees from having illegal drugs or their metabolites or alcohol in their bodies at any time while on the job~~ and~~. As described in this policy, employees may be tested for the presence of drugs and/or alcohol at any time while on duty or at an Agency facility. ~~Alcohol tests on safety-sensitive employees who are performing, are about to perform or who have just completed performing safety-sensitive duties are FTA mandated tests; all other alcohol tests are required by MTS policy.~~ Unless specifically identified in this policy as required by DOT or FTA regulations, such testing is conducted under the independent authority of MTS. Drug tests on safety-sensitive employees are FTA-mandated tests except those specifically identified by this Policy as MTS tests; all drug tests on non-safety-sensitive employees are required by MTS policy, not FTA regulations. FTA regulations prohibit safety-sensitive

employees from using alcohol within four hours prior to ~~their shift~~ performing safety-sensitive functions, while on call, or while ~~on call~~performing safety-sensitive functions, and from having a breath-alcohol concentration of 0.04 or higher while performing safety-sensitive duties. Agency policy prohibits employees from having a breath-alcohol concentration while on duty of 0.02 percent or higher; any employee with a breath-alcohol concentration of 0.02 percent or higher will be terminated. Compliance with these rules is considered an essential job qualification for all employees. **Termination of employment will occur for a violation of any of these rules, even for a first offense. This is a zero tolerance policy. No employee who violates this policy will be given a second chance.**

V.

ENFORCEMENT OF RULE PROHIBITING EMPLOYEES FROM HAVING ILLEGAL DRUGS OR ALCOHOL IN THEIR BODIES DURING WORKING TIME

A. Pre-employment Drug Testing.

All Agency applicants are subject to pre-employment drug testing. Those who are applying for safety-sensitive positions are subject to an FTA pre-employment drug test. Those who are not applying for a safety-sensitive position may be subject to an Agency pre-employment drug test. All drug tests will be administered by a medical facility designated by the Agency. If the drug test is cancelled by the Medical Review Officer ("MRO"), the employee must retake and ~~pass~~receive a verified negative result on the drug test before being hired. The Agency extends conditional offers of employment to successful candidates contingent on their passing a pre-employment drug test; any prospective employee refusing to submit to the drug test will not be hired by the Agency. Any prospective employee with a positive drug test will be rejected from further consideration for employment with the Agency. Further, any safety-sensitive applicant or employee who has previously failed or refused a DOT drug test must provide proof to the Agency, prior to being considered for employment, that they have successfully completed a referral, evaluation and substance abuse treatment plan compliant with the requirements in 49 C.F.R. Part 40 and 655. The Agency will provide each safety-sensitive applicant or employee who fails ~~a~~or refuses a DOT drug test with a list of names, addresses and telephone numbers of locally available Substance Abuse Professionals ("SAP(s)") qualified under 49 C.F.R. Part 40 requirements. Agency policy, not FTA regulations, requires that all fees, other than the cost of the drug test itself, including but not limited to referral, counseling and treatment fees will be paid by the candidate/employee.

B. Reasonable Suspicion Alcohol and Drug Testing

All Agency employees are subject to reasonable suspicion alcohol testing and drug testing. Those who work in safety-sensitive positions are subject to an FTA alcohol test and drug test. Those who do not work in a safety-sensitive position are subject to an Agency alcohol test and drug test. When the Agency has reasonable suspicion to believe that an employee has violated the prohibitions set forth in this policy, the employee will be required to submit to an alcohol test and/or a drug test immediately upon demand by the Agency. Reasonable suspicion testing will be based on specific, contemporaneous, articulable observations concerning the appearance, behavior, speech or body odors of an employee. One or more supervisors or company officials trained in detecting the signs and symptoms of drug use and alcohol misuse must make the required observations. For FTA reasonable suspicion alcohol tests, the alcohol testing authorized in this section (and the observations required by the supervisors or company officials referred to above) must occur during, just before or just after

the employee being tested performs a safety-sensitive function. Observations leading to Agency alcohol tests will likewise be made during, just before or just after the workday of the employee being tested. Observations leading to FTA drug tests may occur any time a safety-sensitive employee is on duty. Observations leading to MTS drug tests may occur any time a non-safety-sensitive employee is on duty.

FTA regulations require that any employee with a positive drug test or an alcohol concentration measure of 0.02 percent or higher be immediately removed from safety-sensitive service, and that an employee with an alcohol concentration measure of 0.02 to 0.039 percent will, at a minimum, not be allowed to perform a safety-sensitive function until the start of the employee's next regularly scheduled duty period that is at least eight hours following the administration of the alcohol test.

Agency policy, not FTA regulations, requires that all employees who are required to submit to a reasonable suspicion drug and alcohol test (Agency or FTA) be removed from working until the results of both tests are known. Further, any employee with a positive drug test or having a breath alcohol concentration measure of 0.02 percent or higher will be terminated from employment with the Agency. Any employee who has a positive DOT drug test or an alcohol concentration measure of 0.04 percent or higher on a DOT-mandated alcohol test will be referred to ~~the Substance Abuse Professional ("SAP")~~SAPs for evaluation in accordance with 49 C.F.R. Part 40. Agency policy, not FTA regulations, requires that all costs, other than the cost of the drug test itself, including but not limited to, referral, counseling and treatment fees will be paid by the candidate/employee.

Refusal to submit to any testing required by this section will be sufficient grounds for termination and will result in the employee being relieved of his or her safety-sensitive duties immediately.

C. Post-Accident Alcohol and Drug Testing

FTA regulations require drug and alcohol testing following certain accidents. In addition, the Agency requires post-accident testing for accidents in circumstances when such testing is not required by the FTA. The following guidelines describe when a test is required by the FTA versus when the test is required by Agency policy. Employees will be informed whether the test is an FTA test or an Agency test. Agency tests will not be conducted using FTA testing forms.

1. FTA Definition of "Accident." An accident, as defined by the FTA, is an occurrence associated with the operation of a vehicle, if as a result:

    a. An individual dies; or

    b. An individual suffers a bodily injury and immediately receives medical treatment away from the scene of the accident; or

    c. With respect to an occurrence in which the public transportation vehicle involved is a bus, van or automobile, one or more vehicles (including non-FTA funded vehicles) incurs disabling damage as a result of the occurrence and such vehicle

or vehicles are transported away from the scene by a tow truck or other vehicle; or

d. With respect to an occurrence in which the public transportation vehicle involved is a trolley car, the public transportation vehicle is removed from operation.

e. Disabling damage means damage that precludes departure of a motor vehicle from the scene of the accident in its usual manner in daylight after simple repairs. Disabling damage includes damage to a motor vehicle, where the vehicle could have been driven, but would have been further damaged if so driven. Disabling damage does not include damage that can be remedied temporarily at the scene of the accident without special tools or parts, tire disablement without other damage even if no spare tire is available or damage to headlights, tail lights, turn signals, horns, or windshield wipers that makes the vehicle inoperative.

2. Fatal Accidents. As soon as practicable following an accident involving the loss of human life, each surviving employee operating the public transportation vehicle at the time of the accident shall submit to an alcohol test and a drug test. Further, any other employee whose performance could have contributed to the accident (e.g., a mechanic in the case of brake failure causing the accident), as determined by the Agency using the best information available at the time of the decision, shall also be required to submit to an alcohol test and a drug-screen test.

3. Non-fatal Accidents. As soon as practicable following an accident not involving the loss of human life, each employee operating the public transportation vehicle at the time of the accident shall submit to an alcohol test and a drug-screen test, unless Agency management determines, using the best information available at the time of the decision, that the employee's performance can be completely discounted as a contributing factor to the accident. In addition, any employee whose performance could have contributed to the accident, as determined by the Agency, using the best information available at the time of the decision, will be required to submit to an alcohol test and a drug-screen test.

4. Agency Definition of "Accident". The Agency defines an accident as any incident which is not subject to FTA-mandated post-accident alcohol or drug testing, but involves damage to company property or an injury to any person. Any employee who is involved in an accident may, at Management's discretion, be required to submit to a non-DOT breath alcohol test and drug test. The definition of "involvement" in an accident includes, but is not limited to, an employee who is in a bus, trolley or other Agency vehicle at the time of an accident. Further, any other employee whose performance could have contributed to the accident, as determined by Agency management using the best information available at the time of the decision, shall also be required to submit to a non-DOT alcohol test and a drug test. The procedures and rules outlined in the remainder of this section apply uniformly regardless of whether the test is an Agency test or a FTA test, however, the Agency sets the procedures for its own testing based on its own authority, not FTA authority.

5. Post-Accident Testing Procedures.

a. Any employee involved in an accident is prohibited from using alcohol for eight hours following the accident or until he or she undergoes a post-accident alcohol test and drug test. Any employee involved in an accident who fails to remain

readily available for the testing required by this section, including notifying company officials of his or her location if he or she leaves the scene of the accident prior to submission to such tests, will be deemed to have refused to submit to testing.

b. Post-accident testing will occur after the employee assists in resolution of the accident or receives medical attention following the accident. The Agency will complete the post-accident drug testing as soon as possible, and such testing will occur no later than 32 hours after the accident. The Agency will attempt to complete the post-accident alcohol testing within two hours of the accident. If the testing is not completed within two hours, the Agency will continue to attempt to complete the test and will prepare a report explaining why the breath specimen was not collected within two hours. If the alcohol test is not completed within eight hours of the accident, the Agency shall cease attempts to complete the test and update the report as to why the test was not completed.

c. Refusal to submit to a test required by this section will be sufficient grounds for termination and will result in the employee being relieved of his or her safety-sensitive duties immediately. Based on FTA regulations, any employee with a positive drug test or having an alcohol concentration measure of 0.02 percent or higher will be immediately removed from safety-sensitive service. Based on Agency policy, any employee with a positive drug test and/or an alcohol concentration measure of 0.02 percent or higher will be terminated from employment with the Agency.

d. Any employee who has a positive DOT drug test or an alcohol concentration measure of 0.04 percent or higher on a DOT-mandated alcohol test will be referred to ~~the Substance Abuse Professional ("SAP")~~SAPs for evaluation in accordance with 49 C.F.R. Part 40. Agency policy, not FTA regulations, requires that all costs, other than the cost of the drug test itself, including but not limited to, referral, counseling and treatment fees will be paid by the employee/former employee.

D. Random Alcohol Testing and Drug Testing

(The testing in this section applies only to safety-sensitive employees as defined above.) All safety-sensitive employees will be subject to unannounced, random alcohol testing and random drug testing in accordance with 49 C.F.R. Part 655. The selection of employees for random alcohol testing and random drug testing shall be made randomly by the Agency. The selection of employees for random alcohol testing and random drug testing shall be by a scientifically valid method, such as a random number table or a computer-based random number generator. Each employee will have an equal chance of being tested each time selections are made. Random alcohol testing will only be conducted while the employee is performing safety-sensitive functions, just before the employee is to perform safety-sensitive functions, or just after the employee has ceased performing such functions. Random testing for prohibited drugs may occur any time while on duty. These tests will not be announced in advance and will be administered on all days and at during all work hours throughout the year. The testing rates will meet or exceed the minimum annual percentage rates set each year by the FTA Administrator. The current year testing rates can be viewed online at: www.transportation.gov/odapc/random-testing-rates.

Each employee selected for random alcohol testing and/or random drug testing must proceed to the test site immediately. Refusal to submit to such testing will be sufficient grounds for termination and will result in the employee being relieved of his or her safety-sensitive duties immediately. Based on FTA regulations, any employee failing a drug test or having an alcohol concentration measure of 0.02 percent or higher will be immediately removed from safety-sensitive service. Based on Agency policy, any employee with a positive drug test and/or an alcohol concentration measure of 0.02 percent or higher will be terminated from employment with the Agency. Any employee who has a positive DOT drug test or a finding of an alcohol concentration measure of 0.04 percent or higher on a DOT-mandated alcohol test will be referred to ~~the Substance Abuse Professional ("SAP")~~SAPs for evaluation in accordance with 49 C.F.R. Part 40. Agency policy, not FTA regulations requires that all costs, other than the cost of the drug test itself, including but not limited to referral, counseling and treatment fees will be paid by the employee/former employee.

E. Drug Testing for Employees Assuming Safety-Sensitive Duties

Any employee who accepts a position with the Agency involving safety-sensitive duties, who has previously been engaged in non-safety-sensitive duties, will be required to submit to and ~~pass~~receive a verified negative result on a pre-employment drug test prior to assumption of the safety-sensitive duties. In addition, any employee who has not performed a safety-sensitive function for 90 consecutive calendar days regardless of the reason, and where that employee has not been in the Agency's random drug testing selection pool during that time, shall be required to take a pre-employment drug test in accordance with Section V(A) above, with a verified negative result before returning to duty.

If the drug test is cancelled by the MRO, the employee must retake and ~~pass~~receive a verified negative result on the test before assuming safety-sensitive duties. Refusal to submit to such testing will be sufficient grounds for termination of employment. Any employee failing a drug test will be immediately removed from safety-sensitive service. Further, failure of a drug test will subject the employee to termination from employment with the Agency. Any employee who has a positive DOT drug test will be referred to ~~the Substance Abuse Professional ("SAP")~~SAPs for evaluation in accordance with 49 C.F.R. Part 40. Agency policy, not FTA regulations, requires that all costs, other than the cost of the drug test itself, including but not limited to, referral, counseling and treatment fees will be paid by the employee/former employee.

F. Return to Duty and Follow-Up Alcohol Testing and Drug Testing

Any safety-sensitive employee who is allowed to return to duty after failing or refusing an alcohol test or a drug test must first provide a negative drug, alcohol (or both) test result. Employees returning to duty after failing or refusing an alcohol test or a drug test will be required to undergo unannounced follow-up alcohol and/or drug testing as directed by a ~~substance abuse professional ("SAP").~~SAP. The number and frequency of such follow-up testing shall be directed by the SAP. The employee will be subject to follow-up testing for as long as prescribed by the SAP, but such testing shall not continue beyond five years from the date the employee returns to safety-sensitive duties. Follow-up alcohol testing will only be conducted while the employee is performing safety-sensitive functions, just before the employee is to perform safety-sensitive functions, or just after the employee has ceased performing such functions. Follow-up testing for prohibited drugs may occur any time while on duty.

Agency policy, not FTA regulations, requires that any employee who is allowed to return to duty following leave for substance abuse rehabilitation must first provide a negative drug, alcohol (or both) test result. Employees returning to duty following leave for substance abuse rehabilitation will be required by Agency policy to undergo unannounced follow-up alcohol and/or drug testing as determined by a counselor who has earned the DOT ~~Substance Abuse Professional ("SAP")~~SAP qualification. The number and frequency of such follow-up testing, and whether or not the testing will be observed, shall be directed by the SAP-qualified counselor. The employee will be subject to follow-up testing for as long as prescribed by the ~~DAPM,~~Drug and Alcohol Program Manager ("DAPM"), but such testing shall not continue beyond five years from the date the employee returns to their duties. The follow-up testing following a leave of absence specified in this paragraph is required by Agency policy, not FTA regulations.

Based on FTA regulations, any employee with a positive drug test or having an alcohol concentration measure of 0.02 percent or higher will be immediately removed from safety-sensitive service. Based on Agency policy, any employee with a positive drug test and/or an alcohol concentration measure of 0.02 percent or higher will be terminated from employment with the Agency. Any employee who has a positive DOT drug test or an alcohol concentration measure of 0.04 percent or higher on a DOT-mandated test will be referred to ~~the Substance Abuse Professional ("SAP")~~SAPs for evaluation in accordance with 49 C.F.R. Part 40. Agency policy, not FTA regulations, requires that all costs, other than the cost of the drug test itself, including but not limited to, referral, counseling and treatment fees will be paid by the employee/former employee.

G. Alcohol Testing and Drug Testing Following Injuries

(The alcohol testing and drug testing required in this section is required by the Agency; these are not FTA-mandated tests.) Any employee who sustains an injury on the job will be required to submit to an alcohol test and a drug test as part of the physician's examination of the employee for the injury. Refusal to submit to such alcohol tests or drug tests will result in the employee being relieved of his or her safety-sensitive duties immediately and will subject the employee to termination of employment. Any employee with a positive drug test or an alcohol concentration measure of 0.02 percent or higher will be terminated by the Agency.

VI.

FALSIFICATION, FAILURE TO TIMELY ARRIVE FOR TESTING, AND FAILURE TO NOTIFY

Any employee who provides false information in connection with an alcohol test or drug test administered under this policy, or who attempts to falsify test results through tampering, contamination, adulteration or substitution, shall be terminated by the Agency.

~~Any employee who fails to appear for a drug test or alcohol test within a reasonable time when required by this policy, or to remain at the testing site until the testing process is completed, or to cooperate fully in the testing process, will be deemed to have refused to be tested, and will be considered to have a positive test.~~

Under the ~~federal~~ Drug-Free Workplace Act of 1988, all employees are required to notify the ~~Human Resources department~~DAPM (identified in Section X of this Policy) in writing immediately, but in any event within five days, after they have been convicted of violating a

criminal drug statute that occurred in the workplace or while working. Any employee who fails to provide such notification shall be subject to termination of employment.

VII.

BEHAVIOR CONSTITUTING A REFUSAL TO SUBMIT TO A TEST

The behaviors outlined in this section apply to all tests administered under this policy regardless of if they are FTA-mandated or required by the Agency's authority; however, Agency tests will not be conducted on DOT testing forms.

A. Actions considered a refusal to submit to ~~an alcohol~~a test include:

~~1. Failure to appear for any test within a reasonable time, as determined by the Agency, after being directed to do so by the Agency or failure to remain readily available following an accident;~~

~~2. Failure to remain at the testing site until the testing process is complete;~~

~~3. Failure to cooperate with any part of the testing process;~~

~~4. Refusal by an employee to complete and sign the certification at Step 2 of the ATF (Alcohol Testing Form) for an FTA-mandated test (or an Agency form, if it is a non-FTA test);~~

~~5. Failure to provide an adequate breath specimen for testing without a valid medical explanation; or~~

~~6. Refusal to undergo a medical examination or evaluation as directed by the MRO or as directed by a Designated Employer Representative ("DER").~~

~~**B. Actions considered a refusal to submit to a drug screen test include:**~~

1. ~~1.~~ ~~Failure~~Fail to appear for any test (except a pre-employment test) within a reasonable time, as determined by the ~~employer, after being directed to do so by the employer or failure to remain readily available following an accident;~~Agency.

~~2.~~ ~~Failure~~Fail to remain at the testing site until the testing process is complete~~;~~

~~3. Failure to cooperate with any part of the testing process (e.g., refusal to empty pockets when so directed by the collector, behaving in a confrontational way~~ except that ~~disrupts the collection process);~~

~~4. Failure to provide a sufficient urine sample as required without a valid medical cause established in writing by a physician;~~

~~5. Refusal to undergo a medical examination or evaluation as directed by the MRO or as directed by a Designated Employer Representative ("DER");~~

2. ~~6. Failure or refusal by~~ an employee ~~to take a second drug screen~~ who leaves the testing site before the testing process commences for a pre-employment test ~~if a DER or the MRO~~ has ~~directed the employee~~not refused to ~~do so;~~test.

3. ~~7. Failure~~Fail to ~~permit the observation or monitoring of the collection of the~~ provide a specimen ~~in~~for a drug or alcohol test, except that an employee who does not provide a specimen because he or she has left the testing site before the testing process commenced for a pre-employment test has not refused to test.

   In the case ~~where~~of a directly~~-~~observed or monitored ~~collection of a~~ urine ~~specimen is required;~~

4. ~~8. For an observed~~ drug collection, failure to permit monitoring or observation of provision of a specimen.

5. Fail to provide a sufficient amount of specimen for a drug or alcohol test without a valid medical explanation for the failure.

6. Fail or decline to take an additional drug test as directed by the collector or the Agency.

7. Fail to undergo a medical evaluation as required by the MRO or the Agency's Designated Employer Representative (DER).

8. Fail to cooperate with any part of the testing process.

9. Fail to follow ~~the~~an observer's instructions to raise ~~your clothing above the waist,~~ and lower clothing and ~~underpants, and to~~ turn around ~~to permit the observer to determine if you have any type of~~during a directly-observed urine drug test.

10. Possess or wear a prosthetic or other device ~~that could be~~ used to ~~interfere with the collection process, or to possess or wear such a device that could be used to interfere~~tamper with the collection process~~; or~~.

11. ~~9.~~ Admit to the adulteration or substitution of a specimen to the collector or MRO.

12. Refuse to sign the certification at Step 2 of the Alcohol Testing Form (ATF).

13. Fail to remain readily available following an accident.

14. The MRO reports ~~to the Drug and Alcohol Program Manager~~ that an employee has a verified adulterated~~, diluted~~ or substituted test result.

~~10. Admitting~~Employees who refuse to ~~the Collector or MRO that the specimen was substituted or adulterated.~~

~~Refusal to submit to~~take a DOT-mandated drug ~~screen~~and/or alcohol test ~~constitutes a verified~~ (s) will be immediately removed from performing safety-sensitive functions and provided with contact information for SAPs. In addition, MTS policy treats all refusals as equivalent to

positive ~~drug~~ test ~~result, which will result in~~results; therefore, the employee will be relieved from all duties pending termination of employment ~~according to Agency policy~~.

VIII.

PROCEDURES FOR ALCOHOL AND DRUG TESTING

A. Procedure for Alcohol Tests

All FTA-mandated alcohol testing called for in this policy shall be conducted in accordance with 49 C.F.R. Part 40: Procedures for Transportation Workplace Drug and Alcohol Testing Programs, as amended. All Agency-mandated breath alcohol testing will follow the same procedures but Agency-mandated tests are not required or governed by 49 C.F.R. Part 40. However, the results of FTA-mandated breath alcohol testing will be compiled on a ~~U.S. Department of Transportation ("DOT") Alcohol Testing Form ("ATF").~~DOT ATF. The results of breath alcohol testing required by the Agency (and not FTA) will be on non-DOT testing forms. Agency management will inform the collection facility whether the test is an FTA or an Agency test. The alcohol testing in this policy applies regardless of whether the alcohol was ingested as beverage alcohol or in a medicinal or other preparation.

The alcohol tests will be administered by a breath alcohol technician ("BAT"), using an evidential breath testing device ("EBT"). The BAT will be trained to proficiency in the operation of the EBT. The EBTs are subject to a quality assurance plan developed by the manufacturers of EBTs. In order to insure that the test results are attributed to the correct employee, the BAT will require the employee to provide photo identification before tests are conducted. If the result of the alcohol screening test is an alcohol concentration of less than 0.02 percent, the employee will be deemed to have passed the FTA and Agency alcohol test. If the initial result of an FTA screening test is a breath alcohol concentration of 0.02 percent or higher, a confirmation test shall be performed under the FTA's authority. If the initial result of an Agency screening test is a breath alcohol concentration of 0.02 percent or higher, a confirmation test shall be performed under the Agency's authority. All alcohol confirmation tests shall be conducted within thirty minutes of the completion of the screening test.

B. Procedure for Drug Tests

All FTA-mandated drug tests called for in this policy shall be conducted in accordance with 49 C.F.R. Part 40: Procedures for Transportation Workplace Drug and Alcohol Testing Programs, as amended. All Agency-mandated drug tests will follow the same procedures but Agency-mandated tests are not required or governed by 49 C.F.R. Part 40. The DOT drug testing custody and control form will be used in connection with all FTA-mandated drug tests administered pursuant to this policy. The results of drug testing required by the Agency (and not FTA) will be on non-DOT testing forms. Agency management will inform the collection facility whether the test is an FTA or an Agency test.

The drugs tested for will be marijuana, cocaine, opioids, phencyclidine, and amphetamines. When an employee arrives at the collection site, the collection site person shall positively identify the employee through the presentation of photo identification. Collection personnel will be trained to ensure employee privacy in providing the urine specimen. Urine specimens collected for drug testing will be split into two containers at the collection site. Collection site personnel will be trained to maintain the integrity of the specimen collection and transfer process. In order to maintain the integrity of the urine specimen, the specimen shall

remain under the direct control of the collection site person from delivery to its being sealed in the mailer to the laboratory conducting the testing on the urine specimen. A tamper-proof sealing system will be utilized to ensure against undetected opening. The specimen bottle shall be identified with a unique identifying number identical to that appearing on the urine custody and control form.

Transfer of urine specimens will be accomplished through appropriate chain of custody procedures. The forms accompanying the specimens will have unique preprinted specimen ID numbers and the employee will sign or initial certifying that the specimen was taken from that employee. All drug tests that are positive will be retested in a confirmation test prior to the laboratory specifying a positive result on a drug test. All drug testing done under this policy will be done by a laboratory that has been certified by the federal Department of Health and Human Services ("DHHS"). The Agency's DHHS certified laboratory is Quest Diagnostics, Inc. All confirmatory tests will be performed using GC/MS techniques. There are federally mandated cut-off limits for the minimum quantity of drug that must be detected in order for a positive test on the initial and confirming test. The current cut-off limits expressed in nanograms per milliliter (ng/ml) are as follows:

Initial test analyte	Initial test cutoff [1]	Confirmatory test analyte	Confirmatory test cutoff concentration
Marijuana metabolites (THCA) [2]	50 ng/mL [3]	THCA	15 ng/mL.
Cocaine metabolite (Benzoylecgonine)	150 ng/mL [3]	Benzoylecgonine	100 ng/mL.
Codeine/ Morphine	2000 ng/mL	Codeine Morphine	2000 ng/mL. 2000 ng/mL.
Hydrocodone/ Hydromorphone	300 ng/mL	Hydrocodone Hydromorphone	100 ng/mL. 100 ng/mL.
Oxycodone/ Oxymorphone	100 ng/mL	Oxycodone Oxymorphone	100 ng/mL. 100 ng/mL.
6-Acetylmorphine	10 ng/mL	6-Acetylmorphine	10 ng/mL.
Phencyclidine	25 ng/mL	Phencyclidine	25 ng/mL.
Amphetamine/ Methamphetamine	500 ng/mL	Amphetamine Methamphetamine	250 ng/mL. 250 ng/mL.
MDMA [4]/MDA [5]	500 ng/mL	MDMA MDA	250 ng/mL. 250 ng/mL.

[1] For grouped analytes (i.e., two or more analytes that are in the same drug class and have the same initial test cutoff):

In order to protect the Agency's employees and the integrity of the drug screen testing process, the Agency has retained the services of a ~~Medical Review Officer ("MRO").~~MRO. The Agency's MRO is Richard Weinstein, M.D., of University Services. Dr. Weinstein's phone number is 800-624-3784. The MRO is a licensed physician with knowledge of drug abuse disorders. If the laboratory results are confirmed positive, the MRO will interview the employee and review all information provided by the employee to determine whether the results are indicative of illegal or illicit drug use. If the employee provides an adequate explanation, the MRO will verify the test results as negative with the Drug and Alcohol Program Manager and take no further action. If the test result of the primary specimen is positive, the employee may request that the MRO direct that the second split specimen be tested in a different DHHS laboratory. Agency policy requires that employees bear all expenses related to verification tests they request. The MRO shall honor such request if it is made within 72 hours of the employee having been notified of a verified positive test. If an employee has not contacted the MRO within 72 hours, the employee may present to the MRO information documenting that serious illness, injury, inability to contact the MRO, lack of actual notice of the verified positive test, or other circumstances unavoidably prevented the employee from timely contacting the MRO. If the MRO concludes that there is a legitimate explanation for the employee's failure to contact the MRO within 72 hours, the MRO shall direct that analysis of the split specimen be performed. The results of the test at the second DHHS-approved laboratory will be forwarded to the MRO.

If the results of the second test fail to confirm the presence of the drugs or drug metabolites found in the primary specimen, the MRO shall cancel the test.

If the MRO advises the Agency that the result of the drug test was negative, but that the test was dilute because the specimen contained a creatinine concentration greater than or equal to 2mg/dL, but less than or equal to 5mg/dL~~,~~, the employee will be required to take another drug screen test immediately; the new test will be an observed collection. In this circumstance, the employee will be given as little advance notice as possible that he or she must return to the collection site. The test result from this test will be used to determine if the employee ~~passes~~receives a verified negative result on the drug test.

If the MRO advises the Agency that the result of the drug test was negative, but that the test was dilute and the specimen contained a creatinine concentration greater than 5mg/dL, the employee will be required to take another drug screen test immediately; the new test will not be an observed collection. In this circumstance, the employee will be given as little advance notice as possible that he or she must return to the collection site. The test result from this test will be used to determine if the employee ~~passes~~receives a verified negative result on the drug test.

The drug testing laboratory shall report test results to the MRO in writing, identifying the results of the test. The MRO will report to the DAPM whether the test is positive or negative, and will report the drug for which there was a positive test, but shall not disclose the quantitation of the test results (except in the case of a grievance, lawsuit, or other proceeding or inquiry initiated by the employee arising out of the verified positive drug test). All records pertaining to urine specimens shall be retained by the drug testing laboratory for a minimum of two (2) years. The drug testing laboratory shall retain all urine specimens confirmed as positive and place them into properly secured long-term frozen storage for a minimum of one (1) year.

MTS policy, not FTA regulations, require that employees who are waiting to provide a breath or urine sample refrain from using electronic devices such as cell phones, ipods, and PDAs. Employees violating this rule will be suspended for a minimum of one day.

IX.

POLICY REGARDING TREATMENT FOR DRUG OR ALCOHOL ADDICTION

A. (The following policy on treatment for drug and alcohol addiction, follow-up testing and the associated consequences is an Agency policy, not an FTA policy.) Any employee who feels that he or she has developed an addiction to, dependence upon or problem with alcohol or drugs, legal or illegal, is encouraged to seek assistance. No disciplinary action will be issued against any employee who (1) comes forward to management with their problem prior to being requested to submit to an alcohol test or a drug screen test and before the Agency learns of a violation of the drug and alcohol policy, and (2) provided the employee has not violated the policy before coming to management. If an employee comes forward to management regarding a drug or alcohol problem seeking assistance, but management learns that the employee violated this policy before coming forward, the Agency will discipline the employee for violating the policy, up to and including termination of employment. Further, if the company learns of a violation of this policy before the employee comes forward, or if the employee comes forward with the problem only after being requested to submit to an alcohol test or a drug screen test, the employee will be subject to termination.

B. **How to Seek Assistance.** To seek assistance for a problem with drugs or alcohol, you may contact MTS's Director of Human Resources (See "Contact Person" listed below), or you may directly contact ~~MHN~~Aetna Resources for Living, the Agency's Employee Assistance Program ("EAP"), by calling 800-~~535-4985~~342-8111 or visiting www.resourcesforliving.com. Information concerning the EAP is posted on company bulletin boards and is available in the Human Resources offices. All requests for assistance will be kept confidential.

C. The Agency has worked with the EAP to develop a list of resources (hospitals and community organizations) offering alcohol or drug treatment programs. The EAP will refer employees seeking assistance to a facility covered by their healthcare (if applicable) or another appropriate treatment organization. Any employee failing an alcohol test or drug test required under this policy will be provided the above-referenced list of resources. The referral to the EAP is independent of any disciplinary action that the company may impose and the employee is responsible for all costs associated with analysis and treatment.

D. Rehabilitation itself is the responsibility of the employee. However, any employee seeking medical attention for alcoholism or drug addiction will be entitled to benefits available under the company's group medical insurance plan applicable to that employee, subject to the restrictions and limits stated in the applicable plan document and/or Collective Bargaining Agreement. Furthermore, rehabilitation leave will be available only to those employees whose employment is not terminated for misconduct prior to coming forward. Rehabilitation leave requests are subject to the leave of absence provisions of the applicable collective bargaining agreement, the Agency's medical leave policy (or the applicable administrative leave policies, if the employee is an administrative employee or member of management). Rehabilitation leave will be available on a one-time-only basis, subject to the conditions for continuing employment in Paragraph E below. **The Agency will not offer rehabilitation leave on a second occasion. The recurrence of an alcohol or drug problem will result in termination of employment.**

E. To be eligible for continuation of employment following a rehabilitation leave, the employee must:

1. Undergo evaluation by a SAP, who will recommend a course of rehabilitation. (This is an Agency-mandated evaluation, not an FTA requirement.)

   Note: The SAP is a person who evaluates employees who have violated a DOT drug and alcohol regulation and makes recommendations concerning education, treatment, follow-up testing, and aftercare. Under DOT and FTA regulations, evaluation by a SAP is only applicable when a covered employee has violated a DOT drug or alcohol regulation. Under Agency policy, in order to promote consistency and ensure adequate training, an employee eligible for rehabilitation leave who has not violated a DOT drug or alcohol regulation must also be evaluated by an individual who meets DOT's SAP qualifications.

2. Begin a program of rehabilitation, strictly follow the rules and guidelines of that program, and sign a release of all medical information, including that relating to drug and alcohol treatment, so the company can monitor his or her progress.

3. Remain continuously enrolled in a treatment program and actively participate in that program.

4. Not reject treatment or leave the treatment program prior to being properly discharged therefrom.

5. Agree that the SAP will determine whether the employee has successfully completed the program.

6. Not violate the Drug and Alcohol Policy and Drug-Free Workplace Act Policy Statement.

F. Any employee suffering from an alcohol or drug problem who rejects treatment or who leaves a treatment program prior to being properly discharged there from will be terminated from employment.

G. All employees returning to active employment from rehabilitation will be required to sign a "Return to Work Agreement" requiring:

1. That the employee must pass a non-DOT alcohol test and non- DOT drug screen test before returning to work;

2. That a SAP must determine that the employee has properly followed an appropriate rehabilitation program and is capable of returning to duty;

3. That the employee agrees to unannounced non-DOT alcohol testing and non-DOT drug testing. The number and frequency of follow-up testing shall be determined by the SAP (this is required by Agency policy, not FTA regulations). The employee will be subject to follow-up testing for as long as prescribed by the SAP, but such tests shall not continue beyond five years from the date of the employee's return to duty;

4. That failure of any drug test or alcohol test or refusal to immediately submit to such testing during this period shall be grounds for immediate termination based on Agency policy (not FTA regulations);

5. That the employee must maintain an acceptable attendance and performance record, not violate the Drug and Alcohol Policy and Drug-Free Workplace Act Policy Statement, and comply with all other company rules and policies upon their return to work.

X.

MISCELLANEOUS INFORMATION REGARDING THIS DRUG AND ALCOHOL POLICY AND DRUG-FREE WORKPLACE ACT POLICY STATEMENT

A. Contact Person – Drug and Alcohol Program Manager (DAPM)

Any employees having questions about the Agency's Drug and Alcohol Policy should contact Brendan Shannon, MTS's Director of Human Resources and Drug and Alcohol Program Manager, located at 1255 Imperial Avenue, Suite 1000, San Diego, California 92101-7492,

telephone number 619-557-4569. ~~If any of the personnel (e.g. EAP, SAP or MRO) listed in this Policy change, or their contact information changes, the DAPM is authorized to update their name and/or contact information as necessary, without requiring the Policy return back to the MTS Board of Directors for approval.~~The DAPM is authorized to make changes to the EAP, SAP or MRO via attachment to this Policy.

B. Training

The Agency provides training for all of its supervisors in order for them to be able to make a determination of whether reasonable suspicion exists for an employee to be required to submit to reasonable suspicion alcohol testing and drug testing. This training includes a minimum of 60 minutes of supervisor training on the effects of drug use and 60 minutes of supervisor training on the effects alcohol use and this policy. Training of newly promoted or hired supervisors will occur before they assume supervisory duties (unless they are under the direct supervision of a trained supervisor or manager). All Safety-Sensitive employees will receive at least 60 minutes of training on the effects and consequences of prohibited drug use on personal health, safety, and the work environment, and on the signs and symptoms that may indicate prohibited drug use or alcohol misuse.

C. Notice of Certain Requirements in Addition to FTA-Mandated Requirements

The policy is designed in part to comply with the ~~Federal Transit Administration ("FTA")~~FTA regulations on prevention of prohibited drug use and alcohol misuse in transit operations, 49 C.F.R. Part 655. However, MTS has added certain additional requirements to this policy, including the following:

1. This policy applies to all employees of MTS and its operating divisions (MTS Bus and MTS Rail), not just safety-sensitive employees as defined by the FTA. As such, Agency employees who are not safety-sensitive employees are subject to pre-employment drug testing and to reasonable suspicion, post-accident and post-injury drug testing and alcohol testing.

2. The Agency requires post-accident alcohol and drug testing in cases where such testing is not required by the FTA. The FTA regulations limit the circumstances under which post-accident alcohol and drug testing will occur, as set forth in Article V(C) above. The Agency requires post-accident alcohol and drug testing using a much broader definition of accident.

3. The Agency requires alcohol testing and drug testing following work injuries, which is not required by FTA regulations.

4. This policy requires employees using prescription drugs to report the prescription to their supervisor or Human Resources, and to provide the medication itself (if requested) to the Agency medical facility.

5. This policy sets forth the disciplinary action for violations of the policy, which is an Agency decision, and is not part of the FTA regulations.

6. This policy requires that all costs of drug treatment and/or SAP evaluation be paid by the employee or former employee. This is an Agency decision, not an FTA requirement.

D. Substance Abuse Professional

The Agency has secured the services of a Substance Abuse Professional ("SAP"). The Agency's ~~Substance Abuse Professional~~SAP is Johnny Guinn, who can be reached at 619-228-1715. Mr. Guinn is a Certified Substance Abuse Professional who specializes in evaluating and treating individuals with substance abuse disorders. Mr. Guinn will evaluate employees who come forward with substance abuse problems, employees returning to duty after failing an alcohol or drug test or following leave for substance abuse rehabilitation, and will direct the frequency of follow-up drug testing and alcohol testing for employees.

E. Right to Examine Records

Every employee has the right to review his/her drug and alcohol testing records (except SAP-determined DOT follow-up testing plans), provide information to dispute the results of a drug or alcohol test and, upon written request, to obtain copies of any records pertaining to his or her drug and alcohol tests, including records pertaining to equipment calibration and laboratory certifications.

XI.

Drug-Free Workplace Act Policy Statement

MTS is a drug-free workplace and has zero-tolerance for violations of MTS's Drug and Alcohol Policy or this Policy Statement.

The Drug-Free Workplace Act of 1988 requires the establishment of drug-free workplace policies such as this one and the reporting of certain drug-related offenses to the FTA.

All MTS employees and contractors are subject to the provisions of the Drug-Free Workplace Act of 1988.

The unlawful manufacture, distribution, dispensation, possession or use of a controlled substance is prohibited in the workplace.

Any employee who is convicted of any criminal drug statute for a violation occurring in the workplace shall notify Brendan Shannon, Director of Human Resources no later than five days after such conviction. Mr. Shannon can be reached at 619-557-4569 or Brendan.Shannon@sdmts.com.

Employees, including, but not limited to, safety sensitive employees, non-safety sensitive employees, and temporary employees, must abide by the terms of the policy statement as a condition of employment.

APPROVAL OF POLICY BY MTS

This policy has been approved by the MTS Board of Directors and Chief Executive Officer.

DATED: ~~May 12, 2022~~

~~Nathan Fletcher~~

Stephen Whitburn
Chairman, MTS Board of Directors

DATED: ~~May 12, 2022~~

Sharon Cooney
Chief Executive Officer

ACKNOWLEDGMENT OF RECEIPT OF
SAN DIEGO METROPOLITAN TRANSIT SYSTEM DRUG AND ALCOHOL POLICY AND DRUG-FREE WORKPLACE POLICY ACT STATEMENT
(EFFECTIVE ~~5/12/2022~~7/30/2026)

I hereby acknowledge receipt of a copy of the SAN DIEGO METROPOLITAN TRANSIT SYSTEM ~~Drug and Alcohol Policy~~DRUG AND ALCOHOL POLICY AND DRUG-FREE WORKPLACE POLICY ACT STATEMENT, effective ~~5/12/2022~~7/30/2026. I understand that I am responsible for reading the policy and that in consideration of my employment with the Agency (MTS, SDTC or SDTI), compliance with the Drug and Alcohol Policy and Drug-Free Workplace Act Policy Statement is a condition of my employment, and I hereby agree to comply with the policy in all respects and consent to the alcohol testing and drug screen testing required by this policy.

DATED: _____

_____
Employee Signature

_____
Employee ID Number

_____
Employee Name (Please Print)

Original Policy was adopted on 1/12/89.
Policy revised on 2/8/93.
Policy revised on 3/25/04.
Policy revised on 8/18/11.
Policy revised on 4/13/17.
Policy revised on 5/12/22.
Policy revised on 7/30/2026

Metropolitan Transit System

Agenda Item No. 21

MEETING OF THE SAN DIEGO METROPOLITAN TRANSIT SYSTEM
BOARD OF DIRECTORS

July 30, 2026

SUBJECT:

Tenable Cybersecurity Software Renewal – Contract Award

RECOMMENDATION:

That the San Diego Metropolitan Transit System (MTS) Board of Directors authorize the Chief Executive Officer (CEO) to execute MTS Doc. No. G3243.0-26 (in substantially the same format as Attachment A), with DI Technology Group Inc (DI Technology), to provide Tenable Cybersecurity Software subscription renewal, for a contract period of five (5) years, in the amount of $805,475.00.

Budget Impact

The total cost of this contract is estimated to be $805,475.00 (Attachment C). The project will be funded by the Information Technology (IT) Security Operating Budget account 662010-234000.

DISCUSSION:

On May 14, 2020 (Agenda Item (AI) 16), the MTS Board approved the purchase of the Tenable Cybersecurity Software as part of MTS's cyber defense strategy. The software enhances MTS's ability to defend its network and systems against unauthorized access by cyber-criminals, specifically it is capable of:

- Scanning for vulnerabilities in networks, servers and users' computers
- Threat detection
- Monitoring and vulnerability scanning of real-world IoT devices, including the Supervisory Control and Data Acquisition (SCADA) system – a component of the agency's train control system
- Risk reporting, e.g. Payment Card Industry (PCI), Health Insurance Portability and Accountability Act (HIPAA), Personally Identifiable Information (PII) etc.
- Auditing device configurations, including network devices, servers and users' computers
- Correlating network traffic with system logs and flagging mismatches/anomalies

Since the initial deployment of Tenable solutions, MTS has continued to expand and modernize its technology footprint, adding new enterprise systems, endpoints, Operational Technology (OT) assets, and connected devices. This expansion necessitates greater and more comprehensive visibility into vulnerabilities and exposures across both IT and OT environments.

Certain advanced malware and exploitation techniques have demonstrated the ability to traverse enterprise and industrial networks, reinforcing the need for continuous vulnerability identification, prioritization, and monitoring.

To address these evolving risks, MTS Information Security and Intelligence team has determined that continuing use of Tenable Security Center and Tenable OT is essential to maintaining effective cybersecurity oversight. Tenable is recognized as an industry leader in vulnerability management and exposure assessment, providing proven capabilities that support proactive risk identification, informed decision-making, and timely remediation across converged IT/OT.

On September 14, 2023 (AI 15), following a competitive procurement process, the Board approved a 3-year renewal of the Tenable Software subscriptions. The current subscription expires on September 30, 2026.

In anticipation of this software expiration date, on June 17, 2026, MTS issued an Invitation for Bids (IFB) to procure the renewal of our Tenable software subscriptions. A total of eleven (11) bids were received by the due date of July 2, 2026. One (1) of the eleven (11) bidders (vCloud Tech Inc) was deemed non-responsive for failing to bid on all five (5) years.

Below is a summary of the bids received:

Bidder Name	Total Bid Amount	Certifications
MTS Independent Cost Estimate (ICE)	$786,190.00	N/A
vCloud Tech Inc**	$558,487.53	N/A
DI Technology Group*	**$805,475.00**	N/A
K Systems Solutions LLC	$929,057.45	N/A
American Business Solutions Inc	$933,692.65	N/A
IT Devices Online, Inc	$935,879.35	Minority Business Enterprise (MBE)
Questivity Inc	$947,256.70	Small Business (SB)
Mars Bear Tech Inc	$948,257.42	N/A
International Cloud Business Inc	$949,950.95	Women-Owned Small Business (WOSB); Economically-Disadvantaged Women-Owned Small Business (EDWOSB)
vPrime Tech Inc**	$950,232.41	N/A
Kambrian Corporation	$956,918.91	WOSB; MBE; Women-Owned Business (WBE)
Global Solutions Group Inc	$1,056,185.86	WOSB; EDWOSB

**Lowest responsive and responsible Bidder **Non-responsive*

DI Technology met all solicitation requirements; therefore, staff deemed them to be the lowest responsive and responsible bidder. Their bid has been determined to be fair and reasonable based on a comparison of all bids received.

Therefore, staff recommends that the MTS Board of Directors authorize the CEO to execute MTS Doc. No. G3243.0-26 (in substantially the same format as Attachment A), with DI Technology, to provide Tenable Cybersecurity Software subscription renewal, for a contract period of five (5) years, in the amount of $805,475.00.

/s/ Sharon Cooney
Sharon Cooney
Chief Executive Officer

Key Staff Contact: Julia Tuer, 619.557.4515, Julia.Tuer@sdmts.com

Attachments: A. Draft Agreement, MTS Doc. No. G3243.0-26
B. Scope of Work
C. Bid Form

Metropolitan Transit System

STANDARD AGREEMENT
FOR

MTS DOC. NO. G3243.0-26

TENABLE CYBERSECURITY SOFTWARE RENEWAL

THIS AGREEMENT is entered into this _____ day of _____, 2026 in the State of California by and between San Diego Metropolitan Transit System ("MTS"), a California public agency, and the following, hereinafter referred to as "Contractor":

Name: DI Technology Group

Address: 17418 Studebaker Rd.
Cerritos, CA 90703

Form of Business: Corporation
(Corporation, Partnership, Sole Proprietor, etc.)

Email: fcerna@ditechnology.com

Telephone: 800-777-6488

Authorized person to sign contracts: Francisco Cerna (Name) — Account Manager (Title)

The Contractor agrees to provide services as specified in the conformed Scope of Work/Minimum Technical Specification (Exhibit A), Contractor's Bid/Pricing Form (Exhibit B), and in accordance with the Standard Agreement, including Standard Conditions (Exhibit C), and Forms (Exhibit D).

The contract term is for five (5) years, effective October 1, 2026 through September 30, 2031.

Payment terms shall be net 30 days from invoice date. The total cost of this contract shall not exceed $805,475.00 without the express written consent of MTS.

SAN DIEGO METROPOLITAN TRANSIT SYSTEM	DI TECHNOLOGY GROUP
By: _____ Sharon Cooney, Chief Executive Officer	By _____
Approved as to form: By: _____ Karen Landers, General Counsel	Title: _____

San Diego Metropolitan Transit System (MTS) is a California public agency comprised of San Diego Transit Corp., San Diego Trolley, Inc. and San Diego and Arizona Eastern Railway Company (nonprofit public benefit corporations). MTS member agencies include the cities of Chula Vista, Coronado, El Cajon, Imperial Beach, La Mesa, Lemon Grove, National City, Poway, San Diego, Santee, and the County of San Diego. MTS is also the For-Hire Vehicle administrator for multiple cities in San Diego County.

1. SCOPE OF WORK/TECHNICAL SPECIFICATIONS

1.1. INTRODUCTION

Since 2020, MTS has leveraged Tenable solutions to support and mature its enterprise vulnerability management program across both Information Technology (IT) and Operational Technology (OT) environments. These solutions have been integral to securing MTS information systems as well as critical transit infrastructure, including Trolley Tracking, Rail Monitoring and Control Systems (CTC), and field-based Programmable Logic Controller (PLC) devices.

The MTS Information Security and Intelligence team has successfully enhanced its ability to detect vulnerabilities and assess risk exposure across IT and OT systems and endpoints through the effective use of Tenable Security Center and Tenable OT. These mature and proven solutions have enabled consistent visibility, risk prioritization, and informed decision-making necessary to protect mission critical systems.

In addition, the MTS Cybersecurity team has developed a high level of familiarity and expertise with the Tenable platforms, resulting in sustained operational value and reduced onboarding risk. Maintaining these enterprise capabilities supports continued skill development, operational continuity, and mature cybersecurity protections for MTS's critical IT and OT systems that directly support the safety, reliability, and security of transit services for riders.

1.2. BACKGROUND

MTS, consistent with other government and public transportation agencies, operates within an increasingly complex and high-risk cybersecurity environment. The continuous expansion of interconnected IT and OT systems has increased the potential for cyber incidents that may result in data theft, service disruption, vandalism, and real-world operational impacts. As a provider of critical public transportation services, MTS infrastructure represents a high-value target where cybersecurity directly supports public safety, operational continuity, and rider confidence.

In addition to ongoing criminal cyber activity, the global cybersecurity environment has become more volatile due to heightened geopolitical tensions and the increasing prevalence of cyber warfare and state-sponsored cyber operations. Conflicts abroad have demonstrated the ability for cyber activity to rapidly extend beyond geographic boundaries and disproportionately impact critical infrastructure sectors, including transportation, energy, and communications. As a result, the likelihood and potential impact of sophisticated cyber threats against public sector systems have increased, heightening the need for mature, defensive cybersecurity capabilities.

Since the initial deployment of Tenable solutions, MTS has continued to expand and modernize its technology footprint, adding new enterprise systems, endpoints, OT assets, and connected devices. This expansion necessitates greater and more comprehensive visibility into vulnerabilities and exposures across both IT and OT environments. Certain advanced malware and exploitation techniques have demonstrated the ability to traverse enterprise and industrial networks, reinforcing the need for continuous vulnerability identification, prioritization, and monitoring.

To address these evolving risks, MTS Information Security and Intelligence team has determined that continuing use of Tenable SecurityCenter and Tenable OT is essential to maintaining effective cybersecurity oversight. Tenable is recognized as an industry leader in vulnerability management and exposure assessment, providing proven capabilities that support proactive risk identification, informed decision-making, and timely remediation across converged IT/OT.

1.3. SCOPE OF WORK

MTS is soliciting a contract to begin on October 1, 2026, billed annually for five years. The annual Tenable package includes:

- SKU: TSCCV (Qty 1)
  - Tenable Security Center Plus includes scanners, 1GB NNM. Must match T.sc license count if upgrading - Annual Subscription - 8000 IP Count
- SKU: AGT-OPS (Qty 2)
  - Tenable.sc Agents - On Premise (For Subscription SC/SCCV)
- SKU: TOT (Qty 1)
  - Tenable.OT includes asset inventory, active querying, passive monitoring, vulnerability management, NNM sensors, and configuration control. Annual Subscription is licensed per Asset. - Assets: 1000

1.4. TARIFFS

All quoted pricing should be “EXCLUSIVE” of tariffs. In the event there are tariffs imposed across any items under this contract, the Contractor may request separate payment through the submission of CBP Form 7501 outlining the HTSUS rate (Box 33) and Duty charged (Box 34) for the description (Box 28) and quantity (Box 30 & 31) of the item which should match the MTS Purchase Order particulars.

Tariff charges may be invoiced under a separate charge to each purchase order once approved by MTS.

1.5. INVOICES

Annual invoices must be sent to the MTS Accounting Department, via email, at ap@sdmts.com. All invoices must have the Purchase Order and contract number clearly displayed to ensure timely payment. MTS will not pay on packing slips, receiving documents, delivery documents, or other similar documents. Invoices must be submitted for payment.

Payment terms shall be net 30 days from invoice date. If MTS rejects an incorrectly submitted invoice and sends it back for correction, the net 30 days restart from the corrected invoice date.

Contractors must also indicate if any of the invoiced amount(s) is for service or work provided by a subcontractor and indicate the amount that will be paid to the subcontractor. Contractors must also comply with the prompt payment requirements in the *Prompt Progress Payments* section of the Standard Conditions.

1.6. [NOT APPLICABLE] PAYMENT PROCESSING SECURITY AND PAYMENT CARD INDUSTRY (PCI) DATA SECURITY STANDARD (DSS) COMPLIANCE

1.7. [NOT APPLICABLE] HEWLETT PACKARD ENTERPRISE (HPE) MINIMUM REQUIREMENTS

1.8. [NOT APPLICABLE] CISCO MINIMUM REQUIREMENTS

1.9. [NOT APPLICABLE] CONTRACTOR'S INFORMATION SECURITY RESPONSIBILITIES

1.10. [NOT APPLICABLE] SAFETY DATA SHEETS (SDS)

1.11. [NOT APPLICABLE] NO RIGHT TO POST SIGNS

1.12. [NOT APPLICABLE] WARRANTY

1.13. [NOT APPLICABLE] REPLACEMENT PARTS

1.14. DELIVERY AND ACCEPTANCE

The current subscription expires 09/30/2026. The renewal must be recorded accurately under the MTS customer ID 863645.

After the support contract is renewed, MTS will confirm its completion by ensuring the updated Software license updates are reflected in the Tenable Customer account portal.

1. The support contract renewal must be accurately recorded under MTS account.
2. Proof of the updated support agreement must be visible and verifiable in the Tenable Customer Support Portal.

1.15. [NOT APPLICABLE] LIQUIDATED DAMAGES

Metropolitan Transit System

TENABLE CYBERSECURITY SOFTWARE RENEWAL - BID FORM REV 2026.06.26

MTS Doc. No. G3243.0-26

Bidder Name: DI Technology Group

Part Number	Item Description	Quantity	Unit of Measure	Unit Price	Extended Price
	Year 1 (10/1/2026-9/30/2027)				
TSCCV	Tenable Security Center Plus includes scanners, 1GB NNM. Must match T.sc license count if upgrading - Annual Subscription - 8000 IP Count	1	EA	$106,847.00	$ 106,847.00
AGT-OPS	Tenable.sc Agents - On Premise (For Subscription SC/SCCV)	2	EA	$ -	$ -
TOT	Tenable.OT includes asset inventory, active querying, passive monitoring, vulnerability management, NNM sensors, and configuration control. Annual Subscription is licensed per Asset. - Assets: 1000	1	EA	$ 54,248.00	$ 54,248.00
				Year 1 Total	**$ 161,095.00**
	Year 2 (10/1/2027-9/30/2028)				
TSCCV	Tenable Security Center Plus includes scanners, 1GB NNM. Must match T.sc license count if upgrading - Annual Subscription - 8000 IP Count	1	EA	106,847,00	$ 106,847.00
AGT-OPS	Tenable.sc Agents - On Premise (For Subscription SC/SCCV)	2	EA	$ -	$ -
TOT	Tenable.OT includes asset inventory, active querying, passive monitoring, vulnerability management, NNM sensors, and configuration control. Annual Subscription is licensed per Asset. - Assets: 1000	1	EA	$ 54,248.00	$ 54,248.00
				Year 2 Total	**$ 161,095.00**
	Year 3 (10/1/2028-9/30/2029)				
TSCCV	Tenable Security Center Plus includes scanners, 1GB NNM. Must match T.sc license count if upgrading - Annual Subscription - 8000 IP Count	1	EA	$106,847.00	$ 106,847.00
AGT-OPS	Tenable.sc Agents - On Premise (For Subscription SC/SCCV)	2	EA	$ -	$ -
TOT	Tenable.OT includes asset inventory, active querying, passive monitoring, vulnerability management, NNM sensors, and configuration control. Annual Subscription is licensed per Asset. - Assets: 1000	1	EA	$ 54,248.00	$ 54,248.00
				Year 3 Total	**$ 161,095.00**
	Year 4 (10/1/2029-9/30/2030)				
TSCCV	Tenable Security Center Plus includes scanners, 1GB NNM. Must match T.sc license count if upgrading - Annual Subscription - 8000 IP Count	1	EA	$106,847.00	$ 106,847.00
AGT-OPS	Tenable.sc Agents - On Premise (For Subscription SC/SCCV)	2	EA	$ -	$ -
TOT	Tenable.OT includes asset inventory, active querying, passive monitoring, vulnerability management, NNM sensors, and configuration control. Annual Subscription is licensed per Asset. - Assets: 1000	1	EA	$ 54,248.00	$ 54,248.00
				Option Year 1 Total	**$ 161,095.00**

TSCCV	Tenable Security Center Plus includes scanners, 1GB NNM. Must match T.sc license count if upgrading - Annual Subscription - 8000 IP Count	1	EA	$106,847.00	$ 106,847.00
AGT-OPS	Tenable.sc Agents - On Premise (For Subscription SC/SCCV)	2	EA	$ -	$ -
TOT	Tenable.OT includes asset inventory, active querying, passive monitoring, vulnerability management, NNM sensors, and configuration control. Annual Subscription is licensed per Asset. - Assets: 1000	1	EA	$ 54,248.00	$ 54,248.00
				Option Year 2 Total	**$ 161,095.00**
				(BASIS OF AWARD) 5 YEARS GRAND TOTAL (Inclusive of all charges):	**$ 805,475.00**

BIDDER ACCEPTS RESPONSIBILITY FOR ACCURACY AND PRESENTATION OF THE ABOVE NUMBERS.

In the case of calculation errors, unit prices will prevail. ***Unit prices shall be rounded to the nearest cent.*** *The above quantities are for bidding pruposes only and are based on MTS' current usage. They represent what MTS anticipates as a requirement, but MTS does not guarantee this quantity. The actual quantity ordered may be more or less than what is anticipated on the pricing form, and it is dictated by MTS actual requirements and the available funding at the time each order is initiated.*

Metropolitan Transit System

Agenda Item No. 22

MEETING OF THE SAN DIEGO METROPOLITAN TRANSIT SYSTEM
BOARD OF DIRECTORS

July 30, 2026

SUBJECT:

Grossmont Transit Center - Elevator Modernization Design Build – Contract Award

RECOMMENDATION:

That the San Diego Metropolitan Transit System (MTS) Board of Directors:

1. Authorize the Chief Executive Officer (CEO) to execute MTS Doc No. PWL465.0-26 (in substantially the same format as Attachment A), with Structura Builders of California Joint Venture (Structura), in the amount of $2,117,654.88 for the modernization of two (2) elevators and stair tower improvements at the Grossmont Transit Center;

2. Authorize a 10% contingency fund of $211,765.49 for contract changes orders pursuant to Board Policy 41.4.4.

Budget Impact

The total cost of this contract is estimated to be $2,117,654.88 plus a 10% contingency of $211,765.49 for a total of $2,329,420.37. This project will be funded by the Capital Improvement Program (CIP) 2006124201 – Trolley Elevator Modernization.

DISCUSSION:

The Trolley and Bus platforms at the Grossmont Transit Center are connected to the Grossmont Center Drive overpass by a stair tower and two (2) traction elevators. The elevators were installed between 2010 and 2013 and are no longer in a State of Good Repair (SGR). The elevators are regularly out of service, and due to the age of the equipment, sourcing replacement parts is becoming increasingly difficult.

Elevator modernization consists of replacing and repairing components to provide a code-compliant system in a like-new state of repair and function. In modernization, components from the existing elevator that are well functioning or otherwise do not need to be upgraded can remain in place. For this project, modernization is expected to include replacement of elevator cabs, controllers, doors, motors, and code-required upgrades to fire and life safety systems.

MTS has identified several architectural improvements to the stair tower to be incorporated into the project, to better protect the modernized elevator facilities. The rapid degradation of the

existing elevators is due in part to vandalism at the site. The planned architectural improvements include replacing the hollow-metal doors and frames to protect the machine rooms and electrical equipment within and installing protective paneling over exterior glass at the lower levels of the tower. When vandalized, the broken glass enters the elevator hoist way, which then results in service outages.

Because the project includes both elevator work and architectural upgrades, Design-Build was selected as the procurement method. This procurement method is expected to reduce the project completion timeline by allowing the contractor to purchase long lead elevator materials while the architectural improvements are being designed.

Work is expected to be completed within three hundred seventy (370) calendar days of issuance of the Notice to Proceed.

On December 11, 2025, MTS issued a Design Build Request for Qualifications (RFQual) PWL455.0-26 to interested parties, allowing them to submit documentation to prequalify for the services.

On February 9, 2026, MTS received three submittals from the following firms:

Firm Name	Certifications
Henderson Building Solutions (Henderson)	None
Schindler Elevator Corporation	None
Structura	None

All three firms' submittals were reviewed and evaluated; all three firms were prequalified to submit proposals.

On April 14, 2026, MTS issued a Request for Proposals (RFP) to the three qualified firms.

On April 27, 2026, a mandatory site visit was held at Grossmont Transit Center, 8601 Fletcher Parkway, La Mesa, CA 91942. Under Section 2.2.2, Mandatory Pre-Proposal Meeting and/or Site Visit, page 9 of the RFP, *"Attendance is mandatory. Proposals will not be accepted from any Proposer who did not attend the Mandatory Pre-Proposal Meeting and/or Site Visit."* However, Schindler Elevator Corporation did not attend the mandatory site visit. Thus, the firm was notified that they were disqualified from the selection process, because they did not attend the required mandatory site visit.

On May 8, 2026, as provided for in MTS's Design-Build process, individual meetings were held with both Structura and Henderson prior to the submission of Proposals. These meetings provided an opportunity for the firms to ask MTS questions, describe their proposals, and verbally discuss alternative concepts.

On June 5, 2026, technical and price proposals were received from Structura and Henderson. The initial pricing for each firm was as follows:

Firm	Amount
Henderson	$2,915,216.00
Structura	$2,463,982.00

On June 12, 2026 the MTS evaluation panel scored initial proposals as follows:

Evaluation Criteria	Maximum Score	Structura	Henderson
1. Price Proposal	30.00	20.20	18.60
2. A. Technical Design and Construction Expertise Overall Management Approach, including Team Structure and Qualifications, Subcontractor Procurement Approach, Collaboration and Integration, Project Controls and Cost Tracking, Quality Assurance/Quality Control	20.00	14.40	17.40
2. B. Technical Design and Construction Expertise Design Development and Management, including Design Build Proposal Quality, and Project Sequencing and Scheduling	45.00	30.30	32.40
3. Life Cycle Cost Analysis	5.00	3.80	4.40
Total	**100.00**	**68.70**	**72.80**

On June 16, 2026, MTS requested clarifications from both proposers concerning their technical and price proposals.

On June 29, 2026, MTS held interviews with both proposers to discuss clarifications and ask questions. Following the interviews, the panel requested both revised technical proposals that, and price proposals incorporated their clarifications from the firms.

On July 6, 2026, MTS received revised technical and price proposals. The revised pricing for each firm is as follows:

Firm	Amount
Henderson	$2,461,635.00
Structura	$2,117,654.88

On July 8, 2026, the evaluation panel rescored the revised proposals as follows:

Evaluation Criteria	Maximum Score	Structura	Henderson
1. Price Proposal	30.00	26.00	20.80
2. A. Technical Design and Construction Expertise Overall Management Approach, including Team Structure and Qualifications, Subcontractor Procurement Approach, Collaboration and Integration, Project Controls and Cost Tracking, Quality Assurance/Quality Control	20.00	14.80	17.60
2. B. Technical Design and Construction Expertise Design Development and Management, including Design Build Proposal Quality, and Project Sequencing and Scheduling	45.00	35.10	34.10

Evaluation Criteria	Maximum Score	Structura	Henderson
3. Life Cycle Cost Analysis	5.00	4.00	4.60
Total	**100.00**	**79.90**	**77.10**

As a result, the evaluation panel determined Structura to be the highest ranked and successful Design-Builder based on Best Value evaluation criteria.

For this project, Structura will utilize the following subconsultant:

Subconsultant Name	Subconsultant Certification
KONE Inc.	None

Structura's initial proposed amount for the services was $2,463,982.00. Through the interview and clarifications process, staff was able to reduce the cost by $346,327.12, for a new total of $2,117,654.88, a 14.05% savings to MTS. MTS' Independent Cost Estimate (ICE) for the services was $1,695,000.00. Based on a comparison of the two proposals received, Structura's pricing was determined to be fair and reasonable.

Structura Builders of California JV is a Joint Venture formed for the purpose of delivering design-build projects. Both Joint Venture partners maintain active, functional, and clearly defined responsibilities for the Project. The joint venture partners are:

- *Structura Builders* provides architect-led design-build leadership, design coordination, permitting, quality oversight, construction management and integration of design and construction activities.
- *Amerivet Contracting* provides construction execution, field supervision, logistics, safety implementation, and self-performed work capabilities.

Therefore, staff recommends that the MTS Board of Directors authorize the CEO to execute MTS Doc No. PWL465.0-26 (in substantially the same format as Attachment A), with Structura, in the amount of $2,117,654.88 for the modernization of two (2) elevators and stair tower improvements at the Grossmont Transit Center.

/s/ Sharon Cooney
Sharon Cooney
Chief Executive Officer

Key Staff Contact: Julia Tuer, 619.557.4515, Julia.Tuer@sdmts.com

Attachments: A. Draft Agreement
B. Scope of Work, Proposals
C. Cost Proposal

Metropolitan Transit System

STANDARD AGREEMENT

FOR

MTS DOC. NO. PWL465.0-26

GROSSMONT ELEVATORS MODERNIZATION PROJECT

THIS AGREEMENT is entered into this _____ day of _____, 2026 in the State of California by and between San Diego Metropolitan Transit System ("MTS"), a California public agency, and the following, hereinafter referred to as "Contractor":

Name: Structura Builders of California Joint Venture

Address: 350 Tenth Ave., Ste 1000

San Diego, CA 92101
City State Zip

Form of Business: Corporation
(Corporation, Partnership, Sole Proprietor, etc.)

Email: tbowman@structurabuilders.com

Telephone: (847) 647-1611

Authorized person to sign contracts Trey W. Bowman (Name) CEO (Title)

The Contractor agrees to provide services with goods as specified. The Contract Documents include the following:

1. Design-Build Agreement
2. Contract Change Orders
3. Forms & Certifications
4. Bridging Documents
5. Drawings & Attachments
6. Permits from other agencies as may be required by law
7. RFP and all addenda, attachments, and appendices
8. RFQ and all addenda, attachments, and appendices
9. Design-Builder's proposal in response to the RFP
10. Construction Documents prepared by the Design-Builder
11. Drawings prepared by the Design-Builder

The total Contract duration shall be no more than Notice to Proceed issuance + 370 days.

Payment terms shall be net 30 days from invoice date. The total cost of this contract shall not exceed $2,117,654.88 without the express written consent of MTS.

DRAFT

1255 Imperial Avenue, Suite 1000, San Diego, CA 92101-7490 • (619) 231-1466 • sdmts.com

San Diego Metropolitan Transit System (MTS) is a California public agency comprised of San Diego Transit Corp., San Diego Trolley, Inc. and San Diego and Arizona Eastern Railway Company (nonprofit public benefit corporations). MTS member agencies include the cities of Chula Vista, Coronado, El Cajon, Imperial Beach, La Mesa, Lemon Grove, National City, Poway, San Diego, Santee, and the County of San Diego. MTS is also the For-Hire Vehicle administrator for multiple cities in San Diego County.

SAN DIEGO METROPOLITAN TRANSIT SYSTEM	STRUCTURA BUILDERS OF CALIFORNIA JOINT VENTURE
By: _____ Sharon Cooney, Chief Executive Officer Approved as to form: By: _____ Karen Landers, General Counsel	By _____ Title: _____

SCOPE OF WORK

ATTACHMENT 2

1. Project Description

The Grossmont Transit Center has two (2) electric traction elevators installed between 2010 and 2013 that provide vertical circulation between the lower Bus/Trolley station platforms and the Grossmont Center Drive overpass (two stops, traveling 37'-4"). Both elevators are installed in the same stair tower, one to the north and the other to the west. The existing elevators have experienced aging and extensive vandalism and are no longer providing reliable service to MTS customers.

The project involves rehabilitating both elevators to a like-new and code-compliant state, providing a new elevator machine room, and upgrading exterior elements of the existing elevator tower to protect against future vandalism. MTS seeks more robust components and exterior hardening through design and material selections that are specifically designed to resist fluid intrusion, corrosion, and damage associated with public transit environments, based on observed field conditions. Vandal resistance and fluid-intrusion mitigation are key project drivers and are addressed in the Scope of Work and Performance Requirements. The elevator modernization, stair tower upgrades, and new machine room must comply with all current applicable codes.

All work will occur in an active Bus and Trolley station. The Design-Builder shall ensure there are no impacts to MTS Trolley and Bus operations, including the following:

A. Maintain access to at least one functioning elevator at all times.

B. Maintain an ADA-compliant pedestrian path of travel between the Trolley platforms and Bus stops at all times.

C. Maintain customer access to the stair tower at all times; when construction activities require temporary reroutes, provide and maintain temporary stairs or walkways to the second-level landing.

D. Provide at least one 15-foot drive lane accessible to vehicular traffic along Trolley & Bus Ct. at all times.

2. Scope of Work

A. Design-Builders shall verify existing conditions and familiarize themselves with the contract documents (including As-Built drawings and specifications) before performing any design development or construction work. MTS shall not accept any responsibility for the inaccuracy of the as-built plans/specifications and the plans/specifications are provided to aid the Design-Builder with existing site conditions. The Design-Builder shall verify all existing site conditions before providing final contract pricing and material procurement.

B. The Design-Builder shall assess existing conditions of the site, elevators, both elevator machine rooms, the electrical and fire alarm panel room, and shall provide an assessment report identifying potential causes of recent outages, required code-compliance upgrades, and recommended components and subcomponents to be modernized to

achieve a like-new, code-compliant condition. The Design-Builder shall present the assessment results and recommendations to MTS for concurrence.

C. With the exception of the hoistways, guide rails, and counterweight frames, the Design-Builder shall replace elevator appurtenances as necessary to deliver a like-new, code-compliant elevator system, including but not limited to:
   i. Hoisting mechanism.
   ii. Traction machine.
   iii. Drive system.
   iv. Positioning system.
   v. Limit switches.
   vi. Cab and landing doors.
   vii. Door operators.
   viii. Interlocks.
   ix. Wiring and electrical components (including microprocessor control system).
   x. Emergency power supply.
   xi. Suspension system.
   xii. Hoist ropes.
   xiii. Motors.
   xiv. Brakes.
   xv. Counterweight assembly.
   xvi. Elevator cab assembly and frame (including cab shell, cab interior, lighting, handrails, flooring, subfloor, toe guards, etc.).
   xvii. Guide rollers and shoes.

D. **Vandalism & Fluid Intrusion Mitigation**: The Design-Builder shall incorporate vandal-resistant detailing and fluid-intrusion mitigation measures throughout the elevator cabs, door openings, hoistways, tower, and equipment spaces.

   i. Tower exterior hardening: Remove or protect exterior surfaces vulnerable to vandalism, including eliminating exterior glazing accessible to vandalism and using shatter-resistant materials (e.g., metal cladding) at lower levels.
   ii. Cab and door opening detailing: Use durable, corrosion-resistant, easy-to-clean cab materials and details that minimize fluid pathways at doors, thresholds, joints, and interfaces; provide new cab interiors with no interior glazing.
   iii. Machine room intrusion control: Limit fluid intrusion by minimizing gaps at doors/frames/penetrations, using sealed door assemblies, and eliminating door louvers where feasible; where ventilation openings are required, locate them high and provide baffled, tamper-resistant designs to reduce fluid entry.
   iv. Fixtures and electrical protection: Select fixtures and components appropriate for moisture and vandal exposure, including GFCI receptacles and NEMA 4-rated fixtures where applicable.
   v. Hoistway/equipment protection: Provide details and materials that reduce corrosion and protect hoistway and equipment components from fluid exposure and frequent cleaning.

E. Elevator cab materials shall be durable, easy to clean, and resistant to corrosion. The cab design shall minimize fluid intrusion from the exterior and at doors, thresholds, and other joints.
F. The Design-Builder shall replace equipment from the existing elevator machine rooms and the electrical and fire alarm panel room per the scope and replace existing doors and door frames with hardened and fluid-resistant door assemblies.
G. Based on site conditions, the Design-Builder shall reduce fluid entry into sensitive components by limiting gaps at doors and thresholds, avoiding direct paths into equipment areas, and using materials that can withstand moisture and frequent cleaning.
H. Any and all replacement elevator components shall be non-proprietary in nature, meaning future replacement parts compatible with the new system can be sourced from multiple independent vendors. Replacement parts shall be readily available to support timely maintenance and repairs.
I. The Design-Builder shall include all required and necessary life safety and fire protection work for both elevators to comply with applicable code and AHJ requirements.
J. Within the adjacent parking structure, MTS will provide up to 26 standard-sized covered parking spaces to the Design-Builder for staging of materials, equipment, and daily parking. Security of all property stored onsite and within the parking structure is the responsibility of the Design-Builder and MTS shall not be held liable for damage or loss to any and all equipment, material, tools, etc. Size and location of the laydown and parking area is to be coordinated with the MTS Project Manager. All deliveries to the site shall be coordinated through the MTS Project Manager. Any proposed temporary staging of materials, equipment, and daily parking beyond or outside of the provided 26 standard-sized spaces shall be coordinated with the MTS Project Manager.
K. The Design-Builder is responsible for legally disposing of any and all waste in relation to the work. The contractor shall not use any MTS receptacles to dispose of material generated during the performance of this contract. During the contract period, the contractor must also fully cover all sediment and storm drainage traps to prevent any and all material from entering. Contractor is responsible for general cleanup at the end of each work day.
L. Upon award Design-Builder shall provide PDFs of material safety data sheets (MSDS) with each submittal, for chemicals that MTS employees may be exposed to. The Contractor shall ensure all available MSDS' are provided to MTS and kept up to date throughout the duration of the contract.
M. Design-Builder is responsible for providing all necessary temporary facilities including but not limited to restrooms, power, water, temporary fencing with fabric, K-rails, and any/all BMPs necessary for the duration of the project. Design-Builder shall provide protection for any open excavations.

3. Performance Requirements

A. Elevators and their appurtenances shall be in a like-new state of performance, meet the latest applicable code requirements, and satisfy ADA and AHJ requirements.
B. The Design-Builder shall include all code/AHJ-compliant life safety and fire protection work for both elevators.
C. Provide new cab interiors with no interior glazing.

D. Elevator finishes, fixtures, and components shall be selected for high-vandalism environments, including resistance to impact, moisture (e.g., GFCI receptacles and NEMA 4-rated fixtures where applicable), corrosion, and frequent cleaning.
E. The elevator tower shall have no new exterior glazing accessible to vandalism.
F. Protect and reinstall existing cameras in each cab and ensure compatibility with the new elevator system. MTS may elect to upgrade cameras to include an audio public address system.
G. Stair tower access for customers shall be maintained at all times.
H. Apart from the new machine room, the final product shall not expand beyond the existing tower footprint or require any trenching, excavation, or below-grade work. See diagram attachment showing the limits of new construction on the platform level of the Grossmont Station.
I. Maintain ADA-compliant passenger access and vehicular traffic flow within the station throughout the duration of the project.
J. Provide a minimum one-year standard warranty on all parts.

4. Deliverables

A. Elevator Existing Conditions Assessment 30% Design Plans – (Architectural, Structural, Electrical, Mechanical, FP, Life Safety as needed).
B. 30% Design Outline Specifications – (Architectural, Structural, Electrical, Mechanical, FP, Life Safety as needed).
C. 30% Project Cost Estimate.

D. 90% Design Plans,Specifications, and Cost Estimate.
E. 100% Full Design Plans, Specifications, and Final Cost Estimate.
F. Phasing and Work Plans, including laydown area, impact footprint, and BMPs.
G. Design and construction schedule, updated with each deliverable.
H. Finish samples for cab flooring, walls, and ceilings and new exterior finishes.
I. Product data for all new/replacement products related to the scope.
J. Permit data.
K. Warranty data.
L. Final As-built plans, reviewed and approved by AHJ if needed.

5. Schedule

A. Elevator Existing Conditions Assessment – NTP + 30 days.
B. Design Development (up to 30% set) – NTP + 60 days.
C. 90% Design Development – NTP + 120 days.
D. 100% Construction Documents – NTP + 150 days.
E. Construction Substantial Completion – NTP + 340 days.
F. Total Contract Duration – NTP + 370 days.

REVISED PROPOSAL

Elevator Installation or Modernization (with KCM831 Controls)
KONE Elevator Support & Solutions Statement

KONE Inc. (KONE) is committed to providing the finest elevator installation and modernizations possible, but we don't stop there. In addition to our elevator installation and modernization services, we offer a comprehensive, quality maintenance program capable of continuing for the life of the elevator. Regardless of whether KONE is selected after an elevator installation or modernization to provide maintenance service, KONE continues to provide value to its customer by offering the following solutions to help maintain the elevator equipment:

Spare Parts

KONE sells Original Equipment Manufacturer (OEM) parts directly to the equipment owner, at its request. OEM parts are sold to the equipment owner at the same price KONE bills its maintenance service customers for non-contract (out of scope) work.

Technical Expertise

KONE provides elevator technical and adjustment support services to the equipment owner, at its request. Technical and adjustment support services are provided to the equipment owner at the same hourly rates KONE bills its maintenance service customers for non-contract (out of scope) work.

Diagnostic Tool

KONE KCM831 controls do not require an external diagnostic tool to perform standard elevator maintenance. Diagnostic capabilities are an integral part of KONE KCM831 controls.

We trust that the solutions described above provide reassurance about your decision to purchase elevators installation or modernization services from KONE. Should you have any questions about this Statement, do not hesitate to contact a KONE representative. More information about KONE, its services, and how to contact a local KONE branch office representative can be found at its website: http://www.kone.us/. We thank you for your business and look forward to building our relationship with you.

Sincerely,

KONE Inc.

MTS GROSSMONT ELEVATORS MODERNIZATION — ACCELERATED (DESIGN-COMPRESSED) SCHEDULE

Design phase compressed to NTP+100 (100% CDs) | Tightened, gapless construction sequence | Structura Builders of California JV

Phase	Task / Activity	Duration	Start Date	End Date
PRE-AWARD				
	◆ RFP Issued	-	4/13/26	-
	◆ Proposal Due	-	6/5/26	-
	Interviews / Evaluation	2 wks	6/8/26	6/22/26
	◆ Contract Award — MTS Board	-	7/30/26	-
	◆ Notice to Proceed (NTP)	-	8/24/26	-
DESIGN DELIVERABLES (COMPRESSED, PER JEFF)				
	Existing Conditions Assessment	20 days	8/24/26	9/13/26
	30% Design Development (Item B)	40 days	8/24/26	10/3/26
	90% Design Development (Item D)	70 days	8/24/26	11/2/26
	KONE Submittals (Shop Drawings/Equipment Data)	70 days	8/24/26	11/2/26
	100% Construction Documents (Item E)	100 days	8/24/26	12/2/26
PRECONSTRUCTION				
	Permitting (AHJ)	4 wks	12/2/26	12/30/26
	KONE Equipment Procurement	8 wks	12/2/26	1/27/27
	Mobilization & Site Setup	2 wks	1/6/27	1/20/27
ELEVATOR 1 — OT				
	Demo – Hoistway Clearout	2 wks	1/20/27	2/3/27
	Concrete Repairs (Hoistway)	1 wk	2/4/27	2/11/27
	Elevator Installation (Mechanical, Electrical, Glazing, Camera, Cab Finishes)	5 wks	2/12/27	3/19/27
	◆ EL-1 MTS Acceptance	-	3/19/27	-
ELEVATOR 2 — OT				
	Demo – Hoistway Clearout	2 wks	3/19/27	4/2/27
	Concrete Repairs (Hoistway)	1 wk	4/3/27	4/10/27
	Elevator Installation (Mechanical, Electrical, Glazing, Camera, Cab Finishes)	5 wks	4/11/27	5/16/27
	Fire Protection Install & Inspection (EL-1 & EL-2, shared system)	2 wks	4/4/27	4/18/27
	◆ EL-2 MTS Acceptance	-	5/16/27	-
ANCILLARY				
	Decorative Sheet Metal (Ext. Base / Glass)	2.5 wks	2/8/27	2/26/27
	Stainless Steel Screen Install	2 wks	1/20/27	2/3/27
	Hollow Metal Door Remove and Install	2 wks	2/19/27	3/5/27
CLOSEOUT				
	Duplex Controller Switchover (Overnight)	0.5 wk	5/16/27	5/20/27
	Final Inspections / Punch List / As-Builts	1.5 wks	5/16/27	5/27/27
	◆ MTS Acceptance Walk — PROJECT COMPLETE	-	5/27/27	-

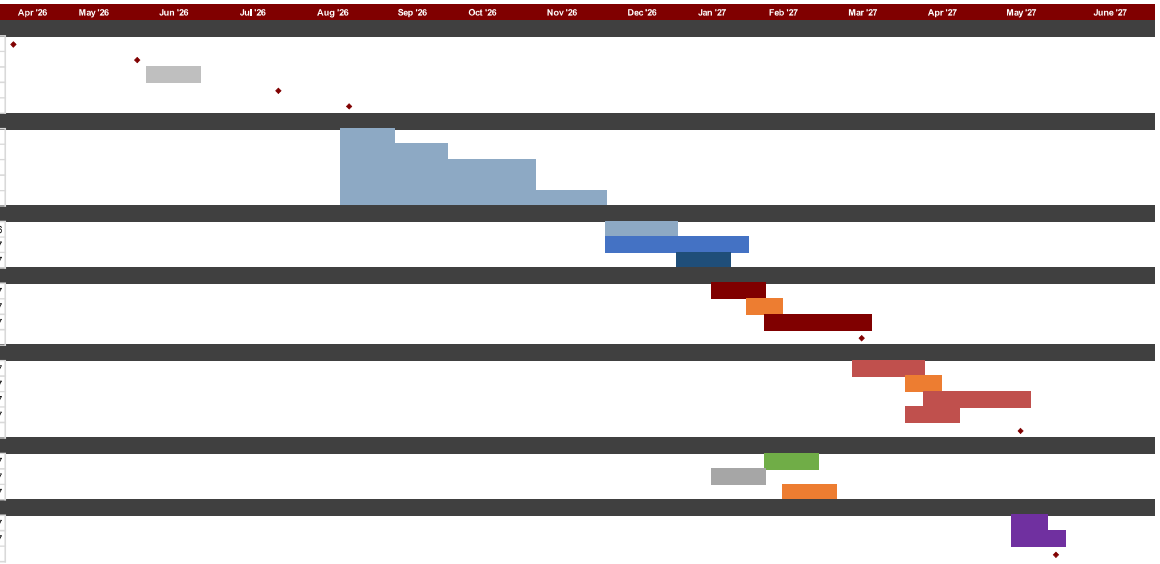

Structura Builders
Building the future

RESPONSES TO MTS REQUEST FOR CLARIFICATION

Grossmont Transit Center Elevator Modernization Project

MTS Doc. No. PWL465.0-26

Submitted by: Structura Builders of California JV | Due: Monday, July 6, 2026, 8:00 PM PST

Question 1 — Non-Proprietary Components (SOW Attachment 2, Item I)

MTS Request: *"In conformance with the SOW: 'Any and all replacement elevator components shall be non-proprietary in nature, meaning future replacement parts compatible with the new system can be sourced from multiple independent vendors. Replacement parts shall be readily available to support timely maintenance and repairs.' Does Structura's proposal meet this requirement?"*

The SOW requires that replacement elevator components be non-proprietary and sourceable from multiple independent vendors. We want to be straightforward here: no elevator system on the market today, from any manufacturer, is fully non-proprietary. Controllers, drive systems, and door operators are inherently manufacturer-specific across the industry, and that would be true no matter which elevator company MTS selected for this project.

What we can commit to, and what sets the proposed KONE solution apart, is that MTS will never be locked into KONE for labor or service. The attached KONE Elevator Support & Solutions Statement confirms three things:

- KONE will sell OEM parts directly to MTS on request, at the same rate it bills its own maintenance customers for non-contract work. MTS is never required to buy parts through KONE-affiliated service labor.
- KONE will provide technical and adjustment support directly to MTS, at request, at standard non-contract hourly rates. MTS can use its own maintenance staff, or hire a third-party elevator maintenance provider, and still access KONE's technical resources when needed.
- The KCM831 controller doesn't need an external diagnostic tool. Diagnostics are built into the control system itself, which removes one of the more common lock-in points where owners get forced back to the OEM just to read a fault code.

In practice, this means MTS can competitively bid maintenance and service work to any qualified elevator contractor for the life of the equipment, rather than being tied to KONE contractually or technically. If it would assist MTS's evaluation of this requirement, Structura is also prepared to submit the proposed KONE system and its components, with supporting documentation, through the contract's substitution / approved-equal process for MTS's formal review and approval.

Question 2 — Hollow Metal Doors and Frames: Cost Justification

MTS Request: *"The pricing provided for replacing (4) hollow metal doors was higher than expected. Please provide a breakdown/justification for this cost."*

The $57,836.25 priced for the hollow metal door scope covers all (4) doors referenced in MTS's request — the (2) electrical room doors and the (2)-leaf machine room double door — set across (3) framed openings, each built to the vandal-resistant, fluid-intrusion-mitigating standard the SOW requires. This isn't a simple door swap — each opening requires full demolition of the existing frame, a new hardened assembly, installation, concrete and jamb repair with joint sealant, and finish painting.

Structura Builders
Building the future

Cost Component	Basis	Amount
Door material — electrical room (2 doors)	Mulholland Brand	$11,994.62
Door material — machine room double door	Mulholland Brand	$9,895.56
Installation — machine room double door	Mulholland Brand	$3,087.98
Installation — electrical room doors (mortise lock)	Mulholland Brand	$2,375.58
Painting	4 door leaves	$5,480.00
Door scope additional labor	3 units	$3,082.50
Demo labor	3 units	$8,220.00
Concrete/jamb repair and joint sealant	3 locations	$13,700.01
Total		$57,836.25

The demolition, concrete repair, and joint sealant are necessary because each opening has to be fully removed and the surrounding concrete restored before a new sealed, hardened frame can go in — it isn't a like-for-like swap. Painting finishes the assemblies to match the tower's vandal-resistant exterior treatment. Taken together, this is the full in-place cost of a code-compliant, hardened door assembly, not just the price of the door itself.

Change from Prior Proposal ($128,540.00)

Our prior proposal (Addendum No. 1, 5/21/26) carried “replace all hollow metal doors” as a single alternate priced at $128,540.00. That figure covered a much broader scope than what's in the base bid today. Here's what accounts for the drop to $57,836.25:

- Scope narrowed to the (3) confirmed openings. The prior number priced every hollow metal door in the stair tower, including the top-floor entryway double-swing door and the ground-floor sliding entryway door. MTS's direction narrowed the stair tower scope to ground-level glazing hardening plus doors at the Fire Alarm Room and two equipment rooms, so we've removed those two entryway doors from the base bid.
- Stair gates removed. The prior estimate included replacing the gates at the base of the stairs. That scope is no longer part of the base bid.
- Material downgraded from hot-dip galvanized to standard steel. The prior estimate priced hot-dip galvanized (HDG) doors and frames throughout, which carry a real cost premium for the zinc-coating process — appropriate for exterior-exposed applications, but unnecessary for the interior electrical and machine room doors now in scope. Standard hollow metal doors and frames meet code here at a lower cost.
- Duplicated installation labor corrected. We found that the prior estimate had inadvertently carried installation labor twice for the same scope of work. That's been fixed in the revised number.
- Contingency reduced. In line with the contingency reduction carried across the whole proposal (see the Contingency Adjustment section under Question 4), this line item now carries less contingency as well.

Structura Builders
Building the future

Question 3 — General Conditions: Detailed Breakdown

MTS Request: *"Provide further breakdown of your general conditions."*
Below is the full detail behind the General Conditions line ($118,573.50), excluding Mobilization and Demobilization, which are priced separately.

Category	Item	Unit	Qty	Cost (incl. markup)
Facilities	Office Trailer w/ stairs	mo	6	$6,576.00
Facilities	Office Trailer complex, setup & takedown	LS	2	$4,110.00
Facilities	Photo Expense	mo	2	$5,480.00
Utilities	Temp Power Bill, office trailer	mo	6	$4,932.00
Utilities	Temp Power Set-up, trailers	LS	2	$5,480.00
Utilities	Wireless router (<10 users)	mo	8	$1,644.00
Utilities	Wireless modem (40 GB/mo)	mo	8	$2,192.00
Utilities	Temp Toilet Rental	mo	8	$4,384.00
Utilities	Temp Lighting	mo	6	$2,466.00
Equipment	Forklift 10K, 55'	mo	5	$12,809.50
Equipment	Fuel	mo	6	$6,576.00
Project Maintenance	Project Signs	mo	8	$5,480.00
Project Maintenance	Temp Fencing, set-up/take-down	LS	2	$2,740.00
Project Maintenance	Temp Fencing, rental/mo	mo	6	$4,110.00
Project Maintenance	Periodic Clean-up	mo	6	$4,110.00
Project Maintenance	Jobsite office cleaning	mo	6	$2,466.00
Project Maintenance	Dumpster Pulls	EA	15	$20,550.00
Project Maintenance	Pedestrian Control	mo	6	$2,466.00
Project Closeout	Final Clean-up	LS	2	$4,110.00
Project Closeout	Window Washing	LS	1	$3,425.00
Project Closeout	Punch List	LS	1	$1,370.00
Safety	Safety Supplies	mo	6	$2,466.00
Safety	Safety Signage	mo	1	$685.00

Structura Builders
Building the future

Category	Item	Unit	Qty	Cost (incl. markup)
Safety	Fire Extinguishers	mo	4	$1,096.00
Safety	Hard Hats (spares/visitors)	ea	20	$1,370.00
Safety	SIPPP	mo	8	$5,480.00
			Total	$118,573.50

Question 4 — Cost Reduction Package: Summary of Pricing Revisions

MTS Request: *"MTS is severely budget constrained, and the pricing provided for this project exceeds our independent cost estimate. In an effort to reduce the overall cost and reduce some risk, MTS is providing the following clarifications: To reduce the overall cost of the project, MTS has made the following adjustments to the project scope and has adjusted the bid form accordingly:*
Eliminate the 60% design submittal
Base bid stair tower renovations limited to the following: Harden ground level exterior glazing and hardening doors at Fire Alarm Room, and two existing equipment rooms.
To eliminate some contractor risk, MTS is proposing to include the following costs in the project as an Allowance, to be used on a time and material basis:
Permitting – MTS is not required to obtain building permits from the City of La Mesa and as such, a $25,000 permit allowance, to be paid on a time and materials basis, should be more than sufficient to cover costs.
Overnight, On-Site Security Staff – MTS can make additional secure storage space available to contractor for duration of the project. If the contractor finds the additional storage space and existing security resources are not sufficient, this allowance will be used on a time and materials basis.
Stair Tower Allowance – The purpose of this allowance to cover minor, out of scope items, which MTS may or may not elect to include in the final project.
To incorporate changes above, please provide the following by Monday July 6 at 8pm PST: Please provide updated pricing using revised bid form, and submit it back in Excel."

MTS's revised scope and cost-reduction direction led to the following pricing changes:

- Design fee — reduced to reflect fewer required submittals (the 60% design submittal is gone), a smaller scope of work to document, a shorter design timeline, and less staffing needed to hit the compressed schedule. This tracks with MTS's evident intent to streamline the design process and reduce cost.
- General Conditions — reduced mainly because on-site security staffing came out of this line (it now lives under the Site Security allowance), along with a shorter overall construction duration.
- Mobilization — reduced to match the smaller scope of work and the equipment it actually requires.
- Permitting, Site Security, and Stair Tower work — converted to Owner-directed allowances, spent on a time-and-materials basis at MTS's direction. This shifts the risk on these items from Structura to MTS.
- Stair tower general repairs — removed from the base bid entirely. We now carry only what the Scope of Work explicitly identifies: ground-level exterior glazing hardening and hardened doors at the Fire Alarm Room and two equipment rooms.

Structura Builders
Building the future

- Fire & Life Safety Maintenance — reduced to match the narrower stair tower and equipment room scope.
- West Elevator Mechanical Renovations — corrected a $10,000 clerical discrepancy so it now matches the North Elevator's identical scope of work.
- Hollow Metal Doors and Frames — refined further to $57,836.25, reflecting the narrowed (3)-door scope confirmed with MTS. See Question 2 for the full breakdown.

Contingency Adjustment

We've also pulled the internal contingency out of this proposal. Two things drove that:

- Allowances now sit with MTS. Permitting, Site Security, and Stair Tower Modification are now Owner-directed allowances spent on a time-and-materials basis. Since MTS now funds and controls these historically uncertain-cost items directly, rather than Structura carrying that risk inside a lump sum, we no longer need to hold contingency against it.
- Less scope, less risk. The narrower stair tower scope, the removal of the new machine room, and the other reductions above all cut down the number of unknowns in the project, which lets us carry less contingency across the base scope.

This shows up throughout the revised Price Proposal Form and reflects our intent to pass savings back to MTS wherever project risk has genuinely gone down or shifted to MTS.

The net effect of all of the above brings the Base Scope Subtotal down from $2,463,982 to $2,080,685.09, for a revised Proposal Total (including the three Owner-directed allowances) of $2,255,685.09. Updated pricing is provided in the attached revised Price Proposal Form.

Question 5 — Updated Schedule and Opportunities to Accelerate

7 Updated Schedule, Required MTS Decisions, Approvals, and Review Durations

MTS Request: *"Please provide updated schedule, including required MTS decisions, approvals, review durations required to meet the schedule."*

Our updated project schedule (Accelerated / Design-Compressed) is provided as a separate attachment. It assumes MTS will review and return comments or approval on every design submittal — the Existing Conditions Assessment, 30% Design Development, 90% Design Development, and 100% Construction Documents — within 5 working days of receipt. Meeting the compressed schedule depends on that turnaround, along with the following:

- Existing Conditions Assessment concurrence — MTS sign-off on our assessment findings and recommended scope, per the SOW.
- Stair Tower Allowance decisions — timely MTS decisions on any additional stair tower work funded through the allowance, so it doesn't hold up the construction sequence.

8 Opportunities to Accelerate the Schedule

MTS Request: *"Is there anything that could be improved upon by MTS to meet the revised schedule? Is there anything that the contractor could improve upon to accelerate the schedule?"*
A few things could meaningfully compress this schedule further, and they require action on both sides:

- MTS drawing review turnaround — we're asking MTS to commit to reviewing and returning comments on the 30%, 90%, and 100% design submittals within 5 working days. Long MTS

Structura Builders
Building the future

review windows are currently the single biggest schedule risk on the design side; a firm 5-day turnaround would meaningfully shorten the path to 100% CDs.

- Decouple the elevator release from final design — elevator equipment design (the car, controller, and drive system) is largely independent of the architectural and structural drawings. We'd recommend releasing that equipment for production ahead of 100% design completion, so KONE's manufacturing lead time runs alongside the remaining design work instead of after it.
- On Structura's side — we commit to matching the discipline we're asking of MTS: we will address and resubmit any design submittal comments within 5 working days of receipt, complete subcontractor buyout immediately upon award, and place the KONE equipment order the same day MTS approves the early release. With those commitments in place, the Accelerated / Design-Compressed schedule reflects the full compression available on our side.

INITIAL PROPOSAL

Structura Builders-Amerivet Joint Venture

Structura Builders
Building the future
DESIGN-BUILD | GENERAL CONTRACTING

AMERIVET
— CONTRACTING —

Date: Friday June 5, 2026

To:
Diana Singleton
Principal Contractor Administrator
Metropolitan Transit System
1255 Imperial Ave. Suite 1000 San Diego, CA 92101

Re: Grossmont Elevators Modernization Project MTS Doc. No. PWL465.0-26

Dear Diana Singleton,

Structura Builders of California Joint Venture is pleased to submit this proposal in response to the above referenced Request for Proposals.

A. Identification of Proposer

- **Company Name:** Structura Builders of California Joint Venture
- **Address:** 350 Tenth Ave. Ste 1000 San Diego, CA 92101
- **Telephone:** 858-300-9614
- **Email:** tbowman@structurabuilders.com

B. Design-Build Team Members Added Since SOQ Submission

The following team members have been added to our Proposed Design-Build Team since the submission of our Statement of Qualifications:

Name	Company	Address	Telephone	Email
Savannah J. Minshew	KONE Elevators and Escalators of USA	9850 Businesspark Ave. San Diego, CA 92131	619-997-3524	savannah.minshew@kone.com
Juan Mendoza	Structura Builders of California JV	350 Tenth Ave. Ste 1000 San Diego, CA 92101	858-208-3638	Jmendoza@Structurabuilders.com
Isaac Velazquez	Structura Builders of California JV	350 Tenth Ave. Ste 1000 San Diego, CA 92101	858-208-3638	Ivelazquez@Structurabuilders.com
Kenneth V Arnold	Amerivet Contracting	8270 Miralani Dr. San Diego, CA 92126	858-208-3638	kenny@vetcontracting.com

Justification for changes:

- *We have introduced Kone Elevators and Escalators of USA as a part of our team to replace Schindler Elevator Corporation. We believe this change directly strengthens our team by aligning our proposed*

elevator partner with the manufacturer and service provider already trusted by MTS, ensuring seamless integration and minimizing risk.

- *We have introduced Juan Mendoza as a part of our team to replace Richard Mann. We believe Juan's technical expertise will support execution oversight as he oversees day-to-day construction and subcontractor management.*
- *We have introduced Isaac Velazquez as a part of our team to replace Maritza Villagomez. Isaac has extensive experience with coordination and works alongside the current construction management team which will help streamline communication for scheduling purposes.*
- *We have introduced Kenneth Arnold as a part of our team to replace Jose Ortiz. Kenneth's technical and leadership skills will help keep the project organized and on schedule.*

C. Proposed Working Relationship Between Proposer and Subcontractors

Structura Builders of California Joint Venture will serve as the lead Design-Build contractor, responsible for overall project management, design oversight, and construction delivery.

KONE Elevators and Escalators is our elevator subcontractor responsible for furnishing and installing both new modernized elevators — including demolition of the existing equipment, retention and reuse of the guide rails, hoist beam, and pit deflector, and full installation of the new cabs, controllers, and entrances — while coordinating directly with Amerivet Contracting on shaft conditions, electrical and low-voltage interfaces, scheduling, and shift work to maintain operational access throughout construction. KONE will be managed by a Structura Builders of California Joint Venture project manager, and will be directly supervised on-site by an Amerivet Contracing superintendent.

D. Contact Person During Proposal Evaluation

The designated contact person during the period of proposal evaluation is:

- **Name:** Jeff Schuler
- **Title:** Principle Architect / Senior Project Manager
- **Address:** 350 Tenth Ave. Ste 1000 San Diego, CA 92101
- **Telephone:** 858-900-9614 ext. 2111

E. Confidentiality Statement

This proposal does not contain any confidential information and may be released, in its entirety, by MTS in response to a request made pursuant to the California Public Records Act.

F. Proposal Validity Statement

This proposal shall remain valid for a period of not less than one hundred and twenty (120) days from the proposal due date.

G. Authorized Signature

Structura Builders-Amerivet Joint Venture

By signing below, the undersigned confirms that they are authorized to bind Structura Builders of California Joint Venture to the terms of this proposal.

Signature: _____
Printed Name: Trey W. Bowman
Title: Chief Executive Officer

H. Joint Venture / Partnership Designation

Structura Builders of California Joint Venture is submitting this proposal as a joint venture. The designated representative of the joint venture is:

- **Name:** Trey W. Bowman
- **Title:** Chief Executive Officer
- **Company:** Structura Builders of California Joint Venture
- **Address:** 350 Tenth Ave. Ste 1000 San Diego, CA 92101
- **Telephone:** 858-900-9614 ext. 8
- **Email:** tbowman@structurabuilders.com

Structura Builders of California JV is a Joint Venture formed for the purpose of delivering design-build projects. Both Joint Venture partners maintain active, functional, and clearly defined responsibilities for the Project.

- Structura Builders provides architect-led design-build leadership, design coordination, permitting, quality oversight, construction management and integration of design and construction activities.
- Amerivet Contracting provides construction execution, field supervision, logistics, safety implementation, and self-performed work capabilities.

Structura Builders-Amerivet Joint Venture

Structura Builders
Building the future
DESIGN-BUILD | GENERAL CONTRACTING

AMERIVET
CONTRACTING

TABLE OF CONTENTS

I. OVERALL MANAGEMENT APPROACH
II. SUBCONTRACTOR PROCUREMENT APPROACH
III. QUALITY ASSURANCE / QUALITY CONTRAOL (QA/QC)
IV. PROJECT CONTROLS, COST TRACKING
V. COLLABORATION AND INTEGRATION
VI. DESIGN DEVELOPMENT AND MANAGEMENT
VII. PROJECT SEQUENCING AND SCHEDULING
VIII. TEAM STRUCTURE AND QUALIFICATIONS
IX. PROPOSED DESIGN SUBMITTAL
X. PROPOSED SCHEDULE
XI. LIFE CYCLE COST ANALYSIS
XII. PRICE PROPOSAL
XIII. INSURANCE REQUIREMENTS
XIV. EXCEPTIONS / DEVIATIONS
XV. OTHER REQUIRED FORMS

Structura Builders-Amerivet Joint Venture

Structura Builders
Building the future
DESIGN-BUILD | GENERAL CONTRACTING

AMERIVET
— CONTRACTING —

5.4.1 Overall Management Approach: Three Key Challenges

Structura Builders of California JV approaches the Grossmont Transit Center Elevator Modernization with a clear-eyed understanding of what makes this project genuinely difficult — not in the abstract, but in the specific physical and operational context of this site. The three challenges identified below reflect direct assessment of existing site conditions, the shared tower building layout, and the realities of executing modernization work in one of MTS's busiest active transit environments. Structura JV's proposal is structured around these challenges as its organizing principle — not around minimizing contractor cost, but around delivering the project correctly.

Challenge 1 — Sequencing Heavy Equipment in a Shared Tower While Maintaining Continuous Elevator Service

Both elevators at Grossmont Transit Center are housed in the same stair tower, side by side. At least one must remain operational at all times to satisfy ADA requirements and MTS operational obligations. This constraint is straightforward to state and extremely difficult to execute correctly — particularly given the physical realities of this specific installation.

The elevator cab assembly is approximately the same footprint as the elevator lobby itself. Removing or installing a cab, traction machine, or counterweight assembly — components weighing up to 2,000 lbs — in a shared tower adjacent to an operational elevator and an active public platform requires careful planning, disciplined sequencing, and a scheduling approach that respects the commuters who depend on this facility every day.

Structura JV's approach prioritizes minimizing the impact on MTS customers. KONE crews will work extended shifts — six 10-hour days per week — compressing the elevator installation window from approximately 10 weeks to 7 weeks per unit. This schedule is included in the base bid. Tasks that can be performed independently of active elevator operation are sequenced around peak commuter hours, keeping the most disruptive activities out of the times when passenger volumes are highest. Juan Mendoza (Project Manager) manages the integrated schedule in coordination with John Holzenthaler (KONE) to ensure daily work plans align with MTS operational patterns and that the adjacent operational elevator is never compromised during any work activity.

Challenge 2 — Designing Vandalism and Fluid Intrusion Resistance That Performs Over the Life of the Project

The existing elevators at Grossmont failed not because of mechanical age alone, but because the original installation was not designed with sufficient resilience for a high-vandalism, outdoor transit environment subject to fluid intrusion. MTS has explicitly identified vandal resistance and fluid-intrusion mitigation as key project drivers. The challenge is not simply specifying robust materials — it is integrating protection into every detail of the design so that it is inherent to the system, not layered on top of it.

Structura JV's design approach addresses this at four levels: exterior tower hardening, cab and door detailing, controls and machine space protection, and fixture and component selection. Jeff Schuler, AIA (Design-Build Lead and Architect of Record, California Licensed) leads all materials selection and detailing in coordination with KONE's engineering team.

- **Tower Hardening —** Metal cladding replaces vulnerable glazing at lower levels. Lockable stainless steel rollup doors or gates secure elevator openings outside transit operating hours, padlocked per MTS requirements. Exterior surfaces are hardened against impact and graffiti.
- **Cab and Door Detailing —** Type 304 stainless steel walls with random swirl pattern finish, stainless steel ceiling, KONE Innovation Brusier Series vandal-resistant ADA-compliant fixtures, no interior glazing. Cab

flooring: Protect-All sheet flooring with heat-welded seams. This product is widely specified in commercial kitchens — environments that experience constant exposure to fluids, grease, biological waste, and aggressive chemical cleaning agents. Heat-welded seams eliminate joints entirely, creating a continuous waterproof membrane that prevents fluid infiltration into the subfloor. It is highly durable, easy to clean, and resistant to the repeated disinfection protocols common in transit environments. This flooring selection directly addresses MTS's stated requirement for fluid-intrusion mitigation at cab thresholds, joints, and interfaces.

- **Controls and Machine Space Protection —** E-Power battery lowering system provides code-compliant power outage backup and fits within the existing machine room closets — eliminating the need for new machine room construction. Sealed door assemblies, ventilation openings located high with baffled tamper-resistant designs, NEMA 4-rated fixtures where applicable, GFCI receptacles throughout.
- **Long-Term Maintainability —** All replacement components are selected for multi-vendor parts availability per scope requirements, ensuring MTS is not dependent on a single source for future repairs and replacements. Product and finish selections throughout this proposal are made not for the lowest upfront cost, but for the lowest lifetime cost to MTS. Protect-All heat-welded sheet flooring creates a fully waterproof cab floor with no joints or seams — protecting expensive elevator mechanical components from fluid damage and eliminating the replacement cycles common with standard elevator flooring in transit environments. Heavy-gauge galvanized hollow metal doors resist corrosion without repainting. Stainless steel cab wall and glass protection eliminates the maintenance cost of painted surfaces that chip, stain, and require refinishing in high-vandalism environments.

Challenge 3 — Minimizing Total Disruption Duration Through Design Decisions Made Before Construction Begins

The most meaningful protection Structura JV can offer MTS customers is not managing disruption well — it is reducing how long that disruption lasts. Every day the Grossmont Transit Center operates with one elevator instead of two is a day MTS customers experience degraded service, a day MTS staff fields complaints, a day the agency carries elevated liability exposure from a partially accessible facility, and a day the project remains a visible reminder to the public that something is wrong. The design decisions made during pre-construction directly determine that duration, and Structura JV has approached them with that priority in mind.

Two decisions in particular compress the construction timeline significantly before a single worker mobilizes to the site. First, the MRL design eliminates new machine room construction entirely — removing weeks of civil work, structural framing, electrical rough-in, and inspections from the critical path. Second, the KONE MonoSpace 700 DX is a like-for-like replacement of the existing installed unit, with guide rails and counterweight frames confirmed for reuse by the OEM. The new cab assembly is sized and configured to the existing hoistway — there is no field-fit uncertainty, no dimensional coordination risk, and no design iteration required to make the new equipment work in the existing structure. The cab goes in the shaft. KONE engineered it for exactly this hoistway.

The combined effect is a materially shorter construction duration than any approach requiring new machine room construction and full hoistway modification. Fewer days on site means fewer customer complaints reaching MTS operations staff, less time ADA-dependent riders are forced to seek alternative access, a faster return to full ridership at a station MTS operates year-round, and reduced demand on MTS staff and management attention throughout the project.

A shorter project also means reduced liability exposure on two fronts. During construction, every day of active work in a public transit environment carries risk — temporary barriers, uneven surfaces, limited sight lines, and

construction equipment in proximity to fare-paying passengers create conditions where a single incident can result in a claim against MTS. The faster the work is complete, the less time MTS carries that exposure. After construction, the product and material selections Structura JV has made — Protect-All heat-welded waterproof sheet flooring, heavy-gauge galvanized hollow metal doors, stainless steel cab wall surfaces, vandal-resistant transit-grade fixtures — are chosen specifically to perform without failure in this environment for the long term. A system that holds up reduces the risk of warranty claims, premature component failure, and the liability that comes with an elevator that goes out of service again before MTS expects it to.

This is the correct way to measure value on a project like this that involves public infrastructure — not just what it costs to build, but how long MTS customers, staff, and operations have to live with the consequences of building it.

5.4.2 Subcontractor Procurement Approach

Our team brings a disciplined, relationship-driven approach to subcontractor procurement that balances speed, quality, and compliance with Public Contract Code 22166.

Trusted Subcontractor Network & Early Engagement

Our first resource in subcontractor selection is our established network of trusted partners with whom we have direct project history. We evaluate each candidate against the specific technical demands of the project before extending consideration, ensuring expertise alignment from the outset. For the Grossmont Elevators Modernization Project, Kone has been identified and engaged as our elevator subcontractor, representing approximately 75% of the project scope. This early commitment enables meaningful design-assist collaboration from the start of design development, allowing for real-time input on constructability, equipment lead times, and system integration — reducing risk and supporting schedule certainty.

For remaining trades, our team has drawn on our trusted subcontractor network to inform the best path forward for project execution. These relationships — built through a proven history of successful construction projects — provide valuable guidance on sequencing, scope definition, and trade coordination early in the design process. While these subcontractors are anticipated to be contracted for the work, consistent with our approach to design-build delivery, we do not lock in remaining subcontractors until final design is approved. This ensures scope is well-defined before commitments are made, protecting both schedule and budget integrity.

Prequalification Through TradeTap

All subcontractors are required to complete our formal prequalification process administered through TradeTap prior to contract award. TradeTap's platform reflects a strong, documented history of successful construction project performance across our subcontractor base. The prequalification process includes:

- Verification of current contractor license numbers and history
- Financial stability assessment
- Reference checks from past projects
- Safety certifications and EMR review
- Submission of current Safety Manual
- Verification of insurance coverage

- A direct interview covering company processes and their specific approach to this project type

This consistent, documented process ensures every subcontractor meets our quality and safety standards regardless of prior relationship.

Challenges & Mitigation

The primary procurement challenge on this project is the specialized nature of elevator modernization work and the limited pool of qualified contractors in the San Diego region. We address this proactively through early engagement of Kone and by maintaining an active pipeline of prequalified specialty trades. For remaining scopes, solicitation will be initiated concurrent with design development to avoid schedule compression at the procurement stage.

Small Business, DBE & Diverse Business Participation

The Structura Builders of California Joint Venture is itself a minority-owned, service-disabled veteran-owned small business. Amerivet, as a principal member of the JV and signatory to the contract for bonding and insurance purposes, brings this certification to the team at the contracting level — not as an afterthought, but as a foundational element of how the team is structured. As members of this community, we believe it is our responsibility to actively uplift similar businesses in our subcontractor selection as well. We make a genuine, sustained effort to identify and engage DBE, MBE, WBE, and DVBE-certified firms for subcontracting opportunities at every tier of the project — not simply as a compliance exercise, but as a reflection of our values and our commitment to the communities in which we build.

5.4.3 Quality Assurance/Quality Control (QA/QC)

A. Overall Approach to Design and Construction QA/QC

The Structura JV's most significant quality advantage on this project is the integration of architectural design, construction management, and general labor under one organizational roof, paired with the early engagement of Kone as both elevator supplier and installer. Unlike a traditional design-bid-build delivery where an architect specifies equipment and hands off to a contractor who then manages a separate supplier relationship, this team designs, builds, and installs together from the ground up. The result is a QA/QC process that begins at the earliest stages of design — where coordination issues are cheapest to resolve — rather than at the point of construction where they become costly and schedule-impacting.

Jeff Schuler, AIA serves as both Architect of Record and construction oversight lead, maintaining continuous design authority from initial concept through field execution. This means that when field conditions require interpretation or adjustment, the decision-maker is the same person who developed the design — eliminating the lag and ambiguity that occurs when design and construction are managed by separate organizations. Quality expectations are established collaboratively, shared across all parties, and enforced consistently from design development through final commissioning.

B. Processes and Tools to Facilitate QA/QC

The team utilizes Procore as its primary construction management platform, providing a centralized, real-time environment for QA/QC documentation and communication across all project phases. The superintendent's

ability to photograph field conditions, flag issues, or document preventive coordination items and link them directly to specific locations on the project plans is a core feature of this workflow. These observations are immediately visible to the entire project team — including project management, subcontractors, and design staff — ensuring nothing is buried in an email chain or overlooked. The whole team is always looking at the same interactive document, replacing fragmented communication with a single source of truth that is continuously updated and accessible in real time.

C. Reporting and Functional Relationships Between Quality Management Personnel and the Design-Build Team

Quality management on this project is embedded across the team structure rather than siloed within a single role. Jeff Schuler maintains design-level quality authority throughout construction, reviewing field conditions against design intent and resolving conflicts directly. Juan Mendoza as Project Manager provides the day-to-day coordination layer, ensuring that QA/QC observations generated in the field are tracked, assigned, and resolved within Procore with a complete audit trail. The superintendent serves as the primary field-level quality owner, responsible for daily documentation, issue identification, and preventive coordination.

Because design and construction oversight are held by the same individual — Jeff Schuler — escalation from field to decision-maker is direct and immediate. Subcontractors are integrated into this quality environment through Procore, with visibility into all relevant field observations and the ability to document resolution, creating a closed-loop process where issues are raised, assigned, tracked, and resolved within a single platform.

C.i. Commitment to Safety and Innovations to Enhance Safety

Safety is treated as an integral component of quality on this project and is managed through the same Procore platform used for broader QA/QC. All incidents and near-misses are documented through a formal protocol governing how each event is treated, investigated, and resolved — creating a consistent record and a culture of accountability.

Trey Bowman holds executive-level responsibility for the Project Safety Program, with implementation supported by project management and field supervision staff. Safety oversight is integrated into daily field operations and sequencing decisions rather than managed as a separate compliance function.

The team's training foundation exceeds standard industry requirements. All management personnel hold OSHA 30 certification. All supervisors hold EM 385 training in addition to OSHA 30, ensuring a consistent and elevated understanding of hazard recognition, regulatory compliance, and safe work practices. Site supervisors are additionally certified in First Aid and CPR. All projects are executed under site-specific safety plans developed to address project-specific hazards, access constraints, and operational conditions. Every site is staffed with a designated Competent Person responsible for monitoring site conditions, enforcing safety requirements, and implementing corrective actions as necessary. Weekly toolbox talks are conducted with detailed recording, ensuring safety topics remain current, relevant to active work, and documented for compliance purposes.

Given that the Grossmont Transit Center is an active, occupied public transit facility, ADA considerations are incorporated into every phase of design and carried through construction planning, sequencing, and field execution — supporting safe access, regulatory compliance, and uninterrupted use of the facility during construction activities.

Kone brings their own rigorous safety framework to the project, governed by their formal Site Safety

Requirements Guide. This includes structured pre-installation checklists covering hoistway conditions, OSHA-compliant barricading capable of withstanding 200 lbs of force in all directions, full-covering entry protection at

all shaft openings, lifeline attachments rated to 5,000 lbs, and verified lighting and access standards throughout the work area. Kone's stated standard is to pass every inspection the first time, taking financial responsibility for any re-testing attributable to their own work. Because Kone is engaged as an integrated team member rather than a separate subcontractor receiving a handoff, their safety requirements are coordinated with the broader site safety plan from day one — eliminating the gaps that arise when elevator contractors arrive to conditions that were not planned with their needs in mind.

5.4.4 Project Controls and Cost Tracking

A. Design to Budget Control and Reporting Processes

The Structura JV employs a proactive, milestone-based approach to design-to-budget control that keeps MTS informed and in control of budget decisions throughout the design process. It is our standard operating procedure to bid plans to qualified subcontractors at the schematic design phase — before the design is fully developed. This early market check tells the team in real terms whether the design is tracking within budget, and if not, whether scope needs to be refined or whether there is room for improvement. Rather than presenting MTS with a completed design and a final cost, we arrive at a budget conclusion together.

This approach is anchored by the financial oversight of Trey Bowman, whose background includes rigorous budget management, monthly WIP reporting, and profitability analysis across projects ranging up to $80 million in annual revenue. His AIA Progress Billing and Construction Financial Management credentials ensure that budget reporting to MTS follows recognized industry standards with full transparency at every phase.

The value of this process was demonstrated on the Bridgewalk Condominium Rehabilitation, where Jeff Schuler served as construction project manager. The project initially identified a broad scope of improvements evaluated at nearly $8 million. Through early engagement with ownership, Jeff facilitated a structured value-engineering process to align scope with the available budget before construction began. When unforeseen structural deficiencies were revealed during construction, Jeff worked directly with ownership to reprioritize remaining scopes on the fly — and while not all original scopes could be accommodated after addressing the structural conditions, the team revised the project in real time and delivered within the original overall budget. That discipline and collaborative transparency is the standard we bring to every project.

B. Scope, Cost, and Schedule Baseline Development and Change Control

Consistent with our integrated team approach, baseline development on this project is a collaborative process that begins early and draws in all key stakeholders. The project schedule has already been shaped through cooperative planning with Kone, ensuring that the team member with the longest lead time items is part of the conversation from the start. As the design phase nears completion, a solid CPM schedule is finalized and presented for team acceptance. All subcontractors sign contracts adhering to this schedule, creating shared accountability for the baseline from day one.

Cost and budget baselines are established through the schematic bidding process described above. Qualified subcontractors submit budget proposals alongside logistics and schedule proposals, meaning cost and schedule baselines are built collaboratively with the parties responsible for executing them — not imposed top-down. This produces baselines that are realistic, team-owned, and fully defensible to MTS.

Change control is managed through Procore with complete transparency. Potential cost impacts are identified and communicated early — flagged as potential issues in Owner-Architect-Contractor (OAC) meetings before they become formal change orders wherever possible. When a change order is required, it is issued in writing through Procore accompanied by a clear description of why the work falls outside the contract scope, what steps were taken to mitigate or avoid the cost, and full supporting documentation. MTS has complete visibility into every change event, its origin, and the team's efforts to minimize its impact.

C. Cash Flow Reporting

Monthly cash flow is managed through AIA Progress Billing, with draw requests based on a schedule of values established at project outset. Each monthly application reflects work completed in place, verified against the project schedule and Procore field documentation, giving MTS a clear and auditable basis for every payment and a running picture of budget consumption relative to project progress. Trey Bowman oversees all financial reporting and cash flow management — a role consistent with his track record preparing detailed P&L and forecasting reports on projects of comparable and greater complexity. MTS can expect timely, accurate, and fully documented monthly reporting throughout the life of the project.

D. Primary Challenges and Mitigation

Two cost control challenges are specific and material to this project.

The first is equipment pricing and lead times. Elevator components carry long procurement windows, and the current market environment — including renewed and escalating tariff pressures on imported materials and equipment — introduces real pricing variability that cannot be predicted with certainty until orders are placed. We have managed through these conditions before and are tracking their return closely. Our mitigation strategy is to leverage the integrated design team structure to compress the design phase and move toward equipment ordering as quickly as possible, locking in today's pricing before market conditions shift. Our cost estimates reflect current market conditions — speed of execution is our primary hedge.

The second is existing structural conditions within the elevator shaft. At this stage, a comprehensive physical assessment of every element of the hoistway and supporting steel has not been completed. Until full site access is granted and a thorough condition assessment can be performed, there is inherent exposure to unforeseen conditions that could affect cost and scope. We manage this risk through rigorous pre-construction assessment during the design phase, clear documentation of assumptions in the contract, and a change management protocol — consistent with the approach used on Bridgewalk — that ensures any discovered conditions are communicated to MTS immediately with transparent options for resolution. The goal is never to surprise the owner; it is to solve problems together.

5.4.5 Collaboration and Integration

Structura Builders of California JV is structured to eliminate the coordination gaps that undermine design-build

projects delivered by specialty-contractor-led teams. On elevator modernization projects where an elevator manufacturer or specialty contractor leads the prime contract, the GC function is subordinate — design coordination, permitting, civil work, electrical integration, and stakeholder management all flow through an organization whose core expertise is vertical transportation, not general construction or design management.

Structura JV inverts this structure deliberately. The Architect of Record and general contractor lead the project. KONE Elevator — the original equipment manufacturer for the installed units — operates as the elevator design-build subcontractor, focused exclusively on what they do best: elevator engineering, equipment supply, installation, testing, and commissioning. This means MTS has a single accountable point of contact who can speak to design decisions, permitting status, civil and electrical coordination, and elevator installation progress simultaneously — without routing questions through multiple organizational layers.

Engaging MTS as a Project Partner

Structura JV's collaboration approach begins at NTP and continues through Final Acceptance. Jeff Schuler leads design review meetings with MTS at each submittal milestone, presenting design decisions in the context of performance requirements and incorporating MTS input before decisions are finalized. Juan Mendoza conducts weekly construction coordination meetings with the MTS Project Manager, providing schedule updates and advance notice of any activities that may affect station operations or passenger experience.

Procore serves as the centralized project management platform. MTS staff receive direct access to the Procore project environment, providing real-time visibility into RFIs, submittals, field observations, and schedule updates without information delays. All design documents, field photos, and coordination logs are accessible to MTS throughout the project.

Conflict Resolution and Decision-Making

Design and construction conflicts are resolved at the lowest level possible, as early as possible. Jeff Schuler and John Holzenthaler (KONE) meet regularly during design development to resolve interface issues between architectural design intent and elevator engineering requirements before submittals are prepared. Field conflicts are addressed in daily coordination between Juan Mendoza and KONE's elevator superintendent.

The integrated design-build structure materially reduces conflict risk. Because the Architect of Record and GC are the same organization, design changes driven by field conditions do not require renegotiation between separate design and construction contracts. Cost, schedule, and technical implications are evaluated concurrently and presented to MTS as a coordinated solution. This is the core advantage of a true GC-led design-build team over an elevator-supplier-led team for a project of this scope.

5.4.6 Design Development and Management

Design Leadership and California Licensure

Jeff Schuler, AIA serves as Design-Build Lead and Architect of Record for this Project. Mr. Schuler holds an active California architectural license and brings sixteen years of combined architectural design and construction management experience. His role integrates design leadership with construction oversight within a single organization — eliminating the traditional handoff between designer and builder that generates RFIs, delays, and cost growth on complex modernization projects in active facilities.

Because design leadership and construction management are housed within the same organization, coordination between design intent and field execution does not depend on software handoffs or model exchanges — it happens through direct daily communication between the same team members responsible for both. Design decisions are informed by construction reality in real time, and field conditions are resolved by the same people who made the design decisions.

Base Proposal Approach — KONE OEM MRL Design

Structura JV's proposal is centered on an approach that MTS confirmed is fully responsive as a base proposal: a machine-room-less design using KONE as the original equipment manufacturer of the installed units, delivering guaranteed cost savings of at least $300,000 to MTS while meeting or exceeding all performance requirements in the Bridging Documents. This is not a cost-cutting shortcut — it is the technically superior solution for this specific installation.

Why KONE as OEM changes everything:

KONE is the original equipment manufacturer of the elevators currently installed at Grossmont Transit Center. No other proposing team has this relationship. KONE's engineers have direct knowledge of the existing hoistway geometry, guide rail installation, counterweight frame configuration, and original installation conditions — without a learning curve or extensive field investigation. KONE's existing shop drawings for the installed units are on file and will inform the conditions assessment and design development immediately upon NTP. This eliminates a significant source of schedule risk and design uncertainty that any non-OEM elevator contractor carries throughout the project.

Savings Item 1 — No New Machine Room: MRL Design with E-Power Battery Lowering

The existing elevators at Grossmont Transit Center are already machine-room-less (MRL) installations — confirmed in MTS Q&A Set 2. The KONE MonoSpace 700 DX is a like-for-like MRL replacement: the drive machine, controller, and counterweight are located within the hoistway envelope. The RFP Scope of Work (Section 2.E) requires a new machine room; Structura JV's base proposal eliminates this requirement entirely.

Code-compliant power outage backup is provided by the KONE E-Power battery lowering system, which moves the elevator cab to the nearest landing and opens doors during a power loss — satisfying the ADA and life-safety requirements of the scope. MTS confirmed in RFP Q&A response 2.17 that a backup emergency generator is not required under Attachment 2.0 Scope of Work; only code-compliant backup power is required, which the E-Power system provides. Critically, the E-Power system is confirmed to fit within the existing machine room closets. No new structure, foundation, or electrical room build-out is required.

- **Cost eliminated —** No new machine room structure, foundation, or building envelope work.
- **Scope eliminated —** No new electrical service room, mechanical ventilation, or access provisions.
- **Disruption eliminated —** Existing machine room closets retained as functional electrical and controls spaces — no relocation of fire alarm panel, electrical panels, or associated equipment.
- **Footprint —** No expansion beyond existing tower footprint — full compliance with Performance Requirement 3.I.
- **Schedule —** Eliminates an entire construction phase, reducing total project duration.
- **Guaranteed Savings —** Guaranteed savings to MTS: $100,000.

Structura Builders-Amerivet Joint Venture

Structura Builders — Building the future — DESIGN-BUILD | GENERAL CONTRACTING

AMERIVET — CONTRACTING —

Savings Item 2 — Guide Rail and Counterweight Frame Reuse

The RFP Scope of Work (Section 2.C) explicitly permits retention of existing hoistways, guide rails, and counterweight frames. Structura JV's plan maximizes this allowance. Because KONE is the OEM, their engineering team can certify the condition and code compliance of the existing rails for reuse without the uncertainty a non-OEM contractor would carry. MTS Q&A 2.15 confirmed that no additional structural or hoist beams will be needed given guide rail retention. This is a lower-risk approach that reduces hoistway disruption, shortens the installation window, and eliminates the structural patching that new rail bracket installations would require.

- **Reuse Confirmed —** Guide rails and counterweight frames confirmed for reuse by KONE as OEM.
- **Work Eliminated —** Eliminates guide rail removal, disposal, new rail procurement, new bracket installation, and hoistway patching for two elevators.
- **Schedule —** Reduces hoistway disruption and installation duration.
- **Guaranteed Savings —** Guaranteed savings to MTS: $200,000.

Guaranteed Savings — Base Proposal Approach	Conventional Approach	Structura JV Savings
MRL Design — No New Machine Room (E-Power battery lowering fits existing closets)	$100,000+	**$100,000**
KONE OEM — Existing Guide Rails & Counterweight Frames Reused	$200,000+	**$200,000**
TOTAL GUARANTEED SAVINGS TO MTS		**$300,000**

Applicable Codes and AHJ Coordination

Jeff Schuler will lead early engagement with the California Division of Occupational Safety and Health (Cal/OSHA) Elevator Unit and all applicable authorities having jurisdiction to confirm the applicable California Building Code cycle, elevator code requirements under ASME A17.1, and life-safety strategy prior to the 30% design submittal. Code year applicability — including whether Emergency Video Communication (EVC) per the 2019 CBC is required or whether the 2004 code cycle applies given the 2011 installation date — will be confirmed with the AHJ as a first-priority design task at NTP.

Early AHJ engagement is standard practice for Structura JV. It eliminates late-stage review surprises, ensures the permit set reflects conditions the inspector has already seen and accepted in concept, and reduces permitting risk across the design schedule. KONE will provide BIM elevator files as part of the submittal package; BIM coordination labor is included in KONE's scope.

Emergency Communications

Regardless of code year determination, Structura JV's design will provide robust emergency communications in each cab. KONE will provide the emergency communication system — including camera and cabling to the demarcation point — with Structura coordinating signal infrastructure and security system integration with MTS's existing systems. If EVC is confirmed as applicable, KONE's 24/7 Emergency Video Communications system will be incorporated into the design. If the 2004 code cycle is confirmed as applicable, a voice-based emergency communication system will be provided at minimum, with EVC offered as an optional enhancement for MTS consideration.

Design Submittal Schedule

- **NTP + 30 days —** Existing Conditions Assessment. KONE OEM knowledge of installed units accelerates this milestone; existing shop drawings on file.
- **NTP + 60 days —** 30% Design Plans, Outline Specifications, and Project Cost Estimate.
- **NTP + 120 days —** 60% Design Plans, Outline Specifications, and Project Cost Estimate.
- **NTP + 150 days —** 90% Design Plans and Specifications.
- **NTP + 180 days —** 100% Construction Documents and Final Cost Estimate.
- **NTP + 370 days —** Construction Substantial Completion.
- **NTP + 400 days —** Total Contract Completion.

5.4.7 Project Sequencing and Scheduling

5.4.7 PROJECT SEQUENCING AND SCHEDULING

A. Overall Approach to Scheduling, Sequencing, and Regulatory/Stakeholder Approvals

The Structura Builders of California JV Design-Build Team treats scheduling as a core project management discipline that begins during design. Because design and construction leadership reside within a single organization, schedule, constructability, and operational impacts are evaluated holistically. The CPM schedule will be prepared in an electronic format acceptable to MTS, delivered in paper and electronic form with all underlying data, updated within 14 calendar days of NTP, and submitted monthly per General Conditions Section 2.1.4. **Phasing is governed by the contractual requirement to keep at least one elevator in service at all times.** The two elevators will be modernized serially — Elevator 1 fully completed and returned to service before Elevator 2 is taken out — mirroring Schindler's proven approach on the BART Market Street Escalators program ($96.5M, 41 units, continuous operations). Permitting milestones — California DIR/Cal—OSHA elevator permit, building permit plan check, and MTS design submittal reviews — are incorporated as explicit CPM activities. Pre-application coordination with the AHJ will be pursued immediately after NTP to confirm review timelines and reduce late-stage surprises.

B. Scheduling Challenges and How the Team Will Address Them

- **Single elevator in service constraint:** All preparatory work — conditions assessment, design, procurement, machine room construction — is front-loaded so shutdown durations are minimized. Schindler's self-performance of elevator removal, installation, and testing provides direct control over the critical-path window.
- **Long-lead equipment:** Specialty components (traction machines, controls, cab equipment) carry 16–22-week lead times. The design-build model enables procurement authorization in parallel with design development; Schindler's direct manufacturer access provides confirmed delivery commitments before mobilization.
- **Constrained staging in an active transit facility:** A Site Logistics and Staging Plan will be developed during design and approved by MTS before construction. Major deliveries will be scheduled during off-peak hours with advance coordination with MTS operations.

- **Concealed/existing conditions:** A thorough conditions assessment of both elevator systems, machine rooms, and the stair tower will be completed as the first design-phase task, before any design decisions are finalized.
- **Regulatory hold points:** All Cal/OSHA inspection hold points are explicitly identified in the CPM schedule with minimum two-week float. Inspectors will be pre-scheduled to the extent possible.

C. Tools for Optimal Sequencing and Coordination

i. Building Information Modeling (BIM): Autodesk Revit is the primary BIM platform. Coordinated 3D models will support clash detection, constructability review, machine room structural coordination, and construction sequencing. Models and documents are distributed to all field and management personnel through Procore for real-time field access.

ii. Administration of Consultants, Subconsultants, and Subcontractors: Procore is the centralized platform for drawings, RFIs, submittals, field observations, change events, and financial tracking — providing real-time visibility to MTS, subcontractors, and project leadership. Maritza Villagomez (Structura Builders) serves as dedicated Scheduling Manager. Pre-phase pull-planning sessions confirm trade resource commitments and resolve near-term conflicts. A master submittal and procurement log, cross-referenced to the CPM, is reviewed at every project meeting. All labor is governed by the MTS Project Labor Agreement; Schindler's union-trained elevator mechanics operate within established PLA craft provisions.

iii. Schedule Assumptions: (1) **Phasing:** Strict serial elevator sequencing; one unit in service at all times. (2) **Conditions assessment:** 3 weeks minimum before design decisions are finalized. (3) **Design/permitting:** 8–12 weeks NTP to permit issuance with overlapped design development and plan check. (4) **Procurement:** 16–22 week lead times initiated in parallel with design; delivery confirmed 2 weeks ahead of installation. (5) **MTS review:** 10 business days per formal submittal milestone. (6) **Skilled labor:** Schindler self-performs elevator work with licensed union mechanics, providing reliable craft availability independent of open-market conditions. General construction labor sourced through Amerivet self-performance and PLA Union hiring hall dispatch (48-hour referral window per PLA §4.7). No unusual labor shortages assumed; Core Employee provisions available as contingency.

5.4.8 Team Structure and Qualifications

5.4.8 Team Structure and Qualifications — Updated Team Information

Core Project leadership remains unchanged from the SOQ: Trey W. Bowman (Project Executive and Safety Manager), Jeff Schuler, AIA (Design-Build Lead and Architect of Record), and Maritza Villagomez (Scheduling Manager). All SOQ information regarding these individuals remains true and accurate. Since SOQ submission,

three personnel changes have occurred in construction management and field supervision, and the elevator specialty subcontractor has been updated. Each change and the qualifications of the proposed replacements are described below.

Construction Management and Field Personnel

Richard Mann (Construction Manager / Cost Controls Manager) retired unexpectedly post-SOQ for reasons unforeseeable and unrelated to the Project. Juan Mendoza assumes the role of Construction Manager and Cost

Controls & Budgeting Manager, bringing 26 years of construction experience — including ownership of a full-service construction company — and direct experience managing multi-trade teams, project budgets, and regulated government contracts.
Jose Ortiz (Superintendent / QA Manager) has left the firm to pursue other interests. Kenneth Arnold assumes both responsibilities, preserving the integrated field-leadership and quality-oversight structure. He brings 15+ years across field superintendence and ownership-level project management, with expertise in job site management, subcontractor supervision, scheduling, cost control, safety compliance, and QC.
Isaac Velazquez joins in a supporting scheduling and coordination role, handling documentation, submittal tracking, and schedule maintenance. His background in contractor outreach and program scheduling at Associated Builders and Contractors supports preconstruction planning and timeline coordination.

Elevator Specialty Subcontractor — Updated Partnership with KONE

Review of the Bridging Documents confirmed that the existing Grossmont Transit Center elevators were originally installed under Montgomery KONE specifications using the KONE MonoSpace system (Attachment 2.3, Section 22-31, Part 2.1, 2009). The Design-Build Team therefore engaged KONE as elevator design-build subcontractor. Returning to the OEM gives MTS direct institutional knowledge of the existing systems, reduces cross-platform compatibility risk and cost, and supports a more efficient design, procurement, and commissioning process — directly benefiting the Project's aggressive schedule.
KONE's assigned team has strong MTS-specific experience: Kyle Smith (Elevator Superintendent) — 25 years of industry experience, 13 with KONE San Diego, active CCCM mechanic's license (No. S36751), and prior superintendent experience on the MTS Qualcomm Stadium Trolley Station elevator modernization. Wyatt Karsh (Project Manager) — phased elevator modernization in active occupied facilities, currently including MTS Grantville. Rob Ware (Lead Commissioning Engineer) — 20 years as KONE's head adjustor for San Diego, active mechanic's license (No. W73621), with direct prior commissioning experience at Grossmont Station as well as the MTS Centerline Bus Depot and MTS Blue Line La Jolla Stations. Mr. Ware's firsthand knowledge of this facility and MTS's commissioning process reduces startup risk and supports MTS's return-to-service requirements.
The Offeror submits that these changes strengthen the team and enhance the likelihood of successful, on-schedule, cost-controlled delivery. Resumes for all new Key Team Members are provided in the following pages per Section 5.4.8.

The Design-Build Team organization chart included in this RFP identifies all Key Team Members, their firm affiliation, reporting hierarchy, and interrelationships across all phases of the Project. Several individuals perform multiple functions to promote continuity, efficiency, and informed decision-making while maintaining clear lines of authority, accountability, and responsibility.
Please note that there have been changes to the team since our SOQ submission. These individual have been notated with an asterisk(*).

Structura Builders-Amerivet Joint Venture

Structura Builders
Building the future
DESIGN-BUILD | GENERAL CONTRACTING

AMERIVET
— CONTRACTING —

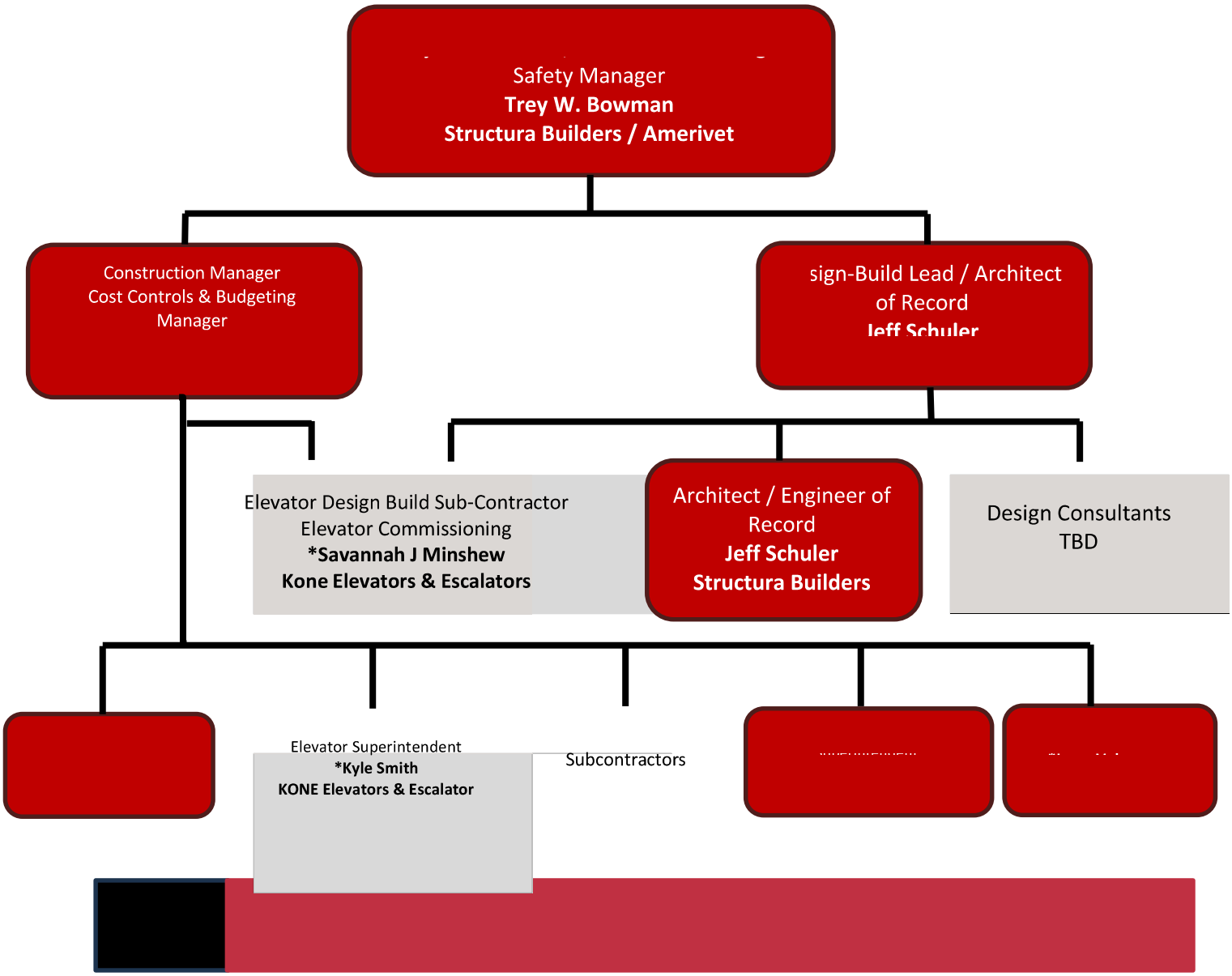

5.4.9 PROPOSED DESIGN SUBMITTAL

Design Excellence — defined here as functional durability, public safety, aesthetic cohesion, and long-term asset value — is the governing standard for every design decision in this proposal. Our base design substantially exceeds MTS minimum performance requirements. All alternatives presented preserve that standard; options that merely reduce cost without meeting or exceeding performance are identified as value-engineering discussions, not substitutions for the proposed design.

A. Design Proposal

i. Understanding of Technical Issues and Scope of Work

The Grossmont Transit Center's two KONE MonoSpace electric traction elevators — installed 2010–2013, two stops, 37'-4" travel — have suffered premature deterioration driven by two compounding failures: vandalism and fluid intrusion. Vandalism creates pathways for moisture; moisture accelerates mechanical and electrical failure. Any solution that addresses only one without the other will repeat the same failure cycle. Our proposed design resolves both systematically and permanently, delivering elevators and a stair tower that will remain in reliable, like-new service for the full lifecycle of the asset — not simply until the next vandalism event.

All work occurs within an active Bus and Trolley station. Maintaining at least one functioning elevator, an ADA-compliant path of travel, stair tower access, and a 15-foot vehicular drive lane at all times are non-negotiable operational constraints that are fully integrated into our sequencing and construction approach.

ii. Proposed Approaches

Three strategic decisions define our approach and distinguish this proposal. As confirmed by MTS in RFP Q&A response 2.1 (dated May 21, 2026), a proposal centered solely on an Alternative Technical Concept approach is fully responsive provided it explains how the approach achieves the objectives of the Bridging Documents — which the design narrative below does in detail.

- Reuse of existing KONE MonoSpace platform — same manufacturer, same configuration, same cab size as existing. Guide rails and counterweight frames are retained. No shaft modification, no footprint expansion, no below-grade work. KONE's direct knowledge of this installation eliminates design uncertainty, reduces permitting risk, and enables a phased replacement sequence that keeps one elevator operational throughout construction.
- Comprehensive, layered vandalism and fluid intrusion protection — every vulnerable interface from cab interior to tower exterior is addressed with durable, low-maintenance materials and details specifically engineered for public transit environments. MTS confirmed in RFP Q&A response 2.8 that the existing pits do not contain sump pumps; the design strategy therefore prioritizes preventing fluid ingress at cab thresholds, door interfaces, and tower openings rather than relying on pumped removal at the pit level. Our base design is a premium, permanent solution. The cost is higher upfront and substantially lower over any realistic asset lifecycle.
- Integrated design-build delivery with in-house architecture and self-performance — Jeff Schuler, AIA, serves as Design-Build Lead and Architect of Record within the same organization providing construction management. Design decisions translate immediately to cost and schedule feedback for MTS. Structura self-performs all non-elevator scope, keeping critical-path items under direct control. No subcontractor coordination delays on exterior hardening, gates, doors, or finishing work.

iii. Minimum Required Design Items

a) Non-Standard Elements

Gurney Compliance — Grandfathered Modernization: The proposed KONE MonoSpace DX units are the same size and configuration as the existing elevators. As a modernization of existing equipment — not a new installation — the proposed units are grandfathered under current California elevator code and are not required to meet gurney-compliance requirements under ASME A17.1/CSA B44 modernization provisions and CCR Title 8. Structura will coordinate with the AHJ during design to formally confirm and document this status in the permitting record.

b) Applicable Codes and Standards

The proposed design will comply with all codes required for permitting and AHJ acceptance, including: CBC Title 24 Part 2 Chapter 30; Cal/OSHA Title 8 Chapter 4 DIR Subchapter 6 (Elevator Safety Orders); ASME A17.1/CSA B44;

ADA and CCR Title 24 Part 2; CFC Title 24 Part 9; NFPA 70 Article 620; NFPA 72; CBC Title 24 Part 2 Section 1624/CCR Title 8 (seismic); and IBC 2018 fire service access provisions where applicable. Design-Builder will obtain all required permits including the two-year Cal/OSHA operating permit with the California DIR. California-registered engineers will sign and stamp documents where required. KONE will submit fully detailed shop drawings and structural loading layouts for AHJ review prior to equipment fabrication.

c) Sustainable Features

Our sustainability strategy is built on lifecycle thinking, not materials checklists. The three most significant contributions: (1) Elimination of a new machine room — no foundation, no HVAC, no structural framing, no ongoing energy load. This is the largest avoided environmental impact available within this scope. (2) All new cab, landing, and ancillary lighting will be LED. (3) Durability as environmental strategy — specifying stainless steel screens, galvanized doors, and welded-seam rubber flooring that will not be replaced, repainted, or repaired for 20+ years eliminates the embedded carbon and resource cost of future maintenance cycles. Investing in permanence is the most effective environmental decision on a project of this type.

d) Proposed Innovations and Enhancements

The following elements define our Design Excellence solution. Each directly targets an identified failure mode. Together they create a stair tower that is durable, secure, maintainable, and visually cohesive — a transit facility that reflects the quality of MTS's commitment to its riders.

- Roppe Rubber Tile Flooring with Heat-Welded Seams: Industrial-grade rubber tile, widely used in commercial kitchen and transit environments. Highly resistant to all fluids and cleaning detergents. Heat-welded seams create a continuous watertight membrane — water cannot siphon through the cab floor. Meets ASME A17.1/CSA B44 Section 2.14.2.1 flame spread and smoke density requirements. This eliminates the primary fluid intrusion pathway at the cab level.
- Quarter-Inch Stainless Steel Decorative Protective Screen: Permanent, corrosion-proof exterior protection at tower lower levels. At this gauge, the screen will not be damaged by repeated impact, will never require repainting, and will not need replacement under normal conditions. Pattern and perforation size are fully customizable in collaboration with MTS — options include design motifs referencing the local area, San Diego, or MTS branding at no additional cost premium. This exceeds the Scope of Work's requirement for shatter-resistant metal cladding at lower levels and transforms a security element into an architectural feature.
- Stainless Steel Swinging Security Gates: Lockable stainless steel swinging gates at top and bottom tower entrances, preferred over rollup doors for three reasons — no mechanical or electrical components to fail or be defeated; direct-mount to concrete structure with hardware strong enough to resist hanging and forced entry; and no risk of accidental closure on passengers. Gates are designed in the same pattern as the protective screen below, creating a unified, intentional design language throughout the tower. Secured with MTS-provided padlock per Bridging Documents.
- New Security Cameras with MTS Monitoring System Integration: New cameras will be installed in each elevator cab, selected for compatibility with the KONE MonoSpace DX control system and connected to MTS's existing monitoring infrastructure. Camera installation and system integration are included in base scope. As an add-alternate, Structura proposes upgrading cameras to include an audio public address capability, as contemplated in the Scope of Work.
- KONE Innovation Bruiser Series Vandal-Resistant Fixtures: All COP, call station, and hallway lantern fixtures are KONE Innovation Bruiser Series — CA ADA-compliant, specifically engineered for high-abuse public transit environments.

• KONE MonoSpace DX — Machine Room-Less Side Machine Configuration: Eliminates the need for a dedicated overhead machine room while delivering 2,500 lb capacity at 200 FPM. Includes emergency battery lowering to nearest landing on power loss — a critical life-safety feature for an active transit station. BIM files are included in KONE's submittal package.

e) Key Equipment Overview

- Elevators (2): KONE MonoSpace DX, Side Machine & CWT — 2,500 lb, 200 FPM, 37'-4", 2 stops, all-front openings, Landings L1 & L2. Capacity, speed, and platform dimensions subject to design-phase confirmation per RFP Q&A 2.7. Equipment selection complies with the performance and component requirements of Attachment 2.0 Scope of Work; as-built specifications are referenced for site-condition context only per RFP Q&A 1.1.
- Cab: Type 304 Brushed Stainless Steel walls, ceiling, LED lighting, aluminum sill, round SS handrail; Roppe rubber tile with heat-welded seams
- Doors: minimum 14-ga, 3'-6" × 7'-0" center-opening with KONE AMDY 2.0 operator, bolted SS construction, aluminum sills; final gauge and dimensional specifications subject to design-phase confirmation per RFP Q&A 2.4–2.6. All existing entrance frames demolished and replaced.
- Fixtures: KONE Innovation Bruiser Series Vandal-Resistant, CA ADA-compliant COP, call stations, and hallway lanterns
- Controls: KONE microprocessor control system, emergency battery lowering, emergency power supply
- Reused: Existing guide rails and counterweight frames retained. All other components demolished.
- Exterior: ¼" SS decorative protective screen at lower tower; lockable SS swinging gates at top and bottom entrances
- Cameras: New cameras, KONE-compatible, connected to existing MTS monitoring system
- Warranty: Minimum one-year warranty on all parts per Scope of Work requirements; KONE limited warranty per Bid Attachment A

f) Alternative Technical Concepts (ATCs) and Add-Alternates

Our base design is the Design Excellence solution — it substantially exceeds minimum performance requirements at every element. The following items are offered for MTS consideration. Formal ATCs meet or exceed base performance; add-alternates extend the scope beyond the base requirement.

- ATC 1 — Accelerated KONE Installation Schedule: Ten-hour work days in lieu of eight reduces demolition from 3 weeks to 2 weeks and installation from 6.25 weeks to 5.5 weeks. Performance fully maintained. Add cost per KONE proposal.
- Add-Alternate 1 — Camera PA System Upgrade: Upgrade new cab cameras to include audio public address capability per Scope of Work Section 3.G.
- Add-Alternate 2 — Metal Pan Stair Repair/Replacement: Advanced rust and cracking observed on site. Most cost-effective to address during this mobilization. Recommended.
- Add-Alternate 3 — Exterior Tower Texture Patch and Repaint: Restores tower exterior to match quality of new elevator and screen systems. Recommended.
- Add-Alternate 4 — Heavy-Duty Galvanized Hollow Metal Door Replacement: Replace all existing hollow metal doors with special-order galvanized doors rated for exterior/high-moisture exposure. Not a like-for-like replacement — a meaningful upgrade in durability, security, and public perception of the facility. Recommended.

Value-engineering options for the protective screen gauge are available and can be discussed with MTS during

design development if budget constraints require adjustment. Any such option will be evaluated against the performance requirements of the Bridging Documents before being formally proposed.

B. Concept Plans / Plan Submittal

Concept plans are provided as a separate scaled attachment. The plan set is intentionally concise — reflecting the project's fundamental advantage: both elevators are replaced like-for-like within the existing tower footprint with no structural modifications to the hoistway. The plans confirm this simplicity as a design strength. The submittal includes:

i. Site Plan — tower location, limits of work, staging areas, construction fencing, maintained 15-foot vehicular drive lane on Trolley & Bus Court
ii. Elevation Plans — existing and proposed tower elevations showing screen locations, gate locations, and door replacement areas
iii. Staging Plans — phased sequence confirming one elevator operational at all times; temporary ADA-compliant path of travel during each phase
iv. Demolition Plan — extent of demolition per elevator; retained guide rails and counterweight frames clearly identified
v. Traffic Handling Plan — vehicular and pedestrian traffic management; maintained 15-foot drive lane; ADA path; temporary stair provisions as required

C. Strategy to Meet MTS's Budget and Schedule

Budget

The proposed base scope exceeds MTS's prescribed budget. This reflects a deliberate, transparent investment in long-term asset performance rather than a minimum-cost solution that will repeat the current failure cycle. Replacing these elevators in another 10–15 years due to continued vandalism and fluid damage — and mobilizing repair crews repeatedly in the interim — is far more expensive than the premium cost of the proposed design. The stainless steel screen system, swinging gates, welded-seam flooring, and galvanized doors are permanent. They do not get repainted, replaced, or repaired under normal conditions.

MTS controls the budget outcome. Our integrated design-build structure means design decisions translate immediately to cost feedback — MTS can direct value-engineering choices in real time with full visibility into the cost implications before commitments are made. Add-alternates for the stair repair, repainting, and door upgrades are priced separately so MTS can calibrate the total project scope. Gauge and specification options for the protective screen are available if needed.

Procuring rapidly also protects the budget. KONE's pricing carries a tariff allowance that is subject to change as geopolitical conditions evolve. With architecture and construction in-house, Structura can move from NTP to final material procurement faster than any team relying on external consultants — locking in pricing before further tariff escalation.

Schedule

Schedule is based on the anticipated NTP of August 24, 2026. The primary schedule advantage is the absence of hoistway reconstruction — KONE's demolition and installation durations are based on confirmed, known conditions. There are no shaft unknowns to extend the critical path.

- Existing Conditions Assessment: KONE and Jeff Schuler, AIA co-lead a comprehensive assessment of both elevators, machine rooms, and the electrical/fire alarm panel room within the first 30 days of NTP. Findings and recommendations presented to MTS for concurrence before 30% design begins.
- Demolition (per elevator): 3 weeks, 2 crews. Reducible to 2 weeks with overtime ATC.
- Installation (per elevator): 6.25 weeks, 2 crews. Reducible to 5.5 weeks with overtime ATC.
- Adjustment, State Inspection, Acceptance: 2 weeks.

One elevator remains operational throughout. Structura's self-performance of all non-elevator work eliminates subcontractor scheduling dependency on critical-path exterior and finishing items. A full CPM schedule based on the August 24 NTP date is provided per Section 5.4.10.

5.4.10 Proposed Schedule

NTP: Aug 24, 2026 | Demo: 2 weeks/elev (OT) | KONE Install: 4 weeks/elev (OT) | Contractual Milestones per Scope of Work §5 | Prepared by: Structura Builders of California JV

PHASE	TASK / ACTIVITY	DUR	TARGET DATE
PRE-AWARD			
	RFP Issued (Apr 13, 2026)	—	4/13/26
	Proposal Due (Jun 5, 2026)	—	6/5/26
	Interviews / Evaluation	2 wks	~6/15/26
	Contract Award — MTS Board	—	7/30/26
	Notice to Proceed (NTP)	—	8/24/26
DESIGN DELIVERABLES (Scope of Work §5)			
	Existing Conditions Assessment	21 days	9/14/26
	30% Design Plans, Specs & Cost Est.	42 days	10/6/26
	NTP+21 — Conditions Assessment Due ◆	—	9/14/26
	NTP+42 — 30% Design Due ◆	—	10/6/26
	60% Design Plans, Specs & Cost Est.	84 days	11/17/26
	NTP+84 — 60% Design Due ◆	—	11/17/26
	90% Design Development	105 days	12/8/26
	NTP+105 — 90% Design Due ◆	—	12/8/26
	100% Construction Documents	126 days	12/29/26
	NTP+126 — 100% CDs Due ◆	—	12/29/26
	NTP+370 — Substantial Completion ◆	—	8/29/27
	NTP+400 — Total Contract Closeout ◆	—	9/28/27
PRECONSTRUCTION			
	Mobilization & Site Setup	2 wks	2/1/27
	Submittals / KONE Equipment Procurement	8 wks	2/1/27
	Permitting & Code Research (CBC/FLS/AHJ)	6 wks	2/1/27
ELEVATOR 1 — OT			
	Demo – Hoistway Clearout (Amerivet)	2 wks	3/1/27
	Fire Protection Install & Inspection	1.5 wks	3/1/27
	Hoistway Electrical / Lighting	1.5 wks	3/1/27
	KONE Mechanical Installation	4 wks	4/1/27
	Security Camera / AV Routing (LV Elec.)	~1 wk	5/3/27
	Storefront Glazing Removal & Hardening	1.5 wks	4/1/27
	Stainless Steel Gates / Rollup Doors	1.5 wks	4/1/27
	Cab Flooring (Marine Ply + ROPP/Epoxy)	1 wk	5/3/27
	Cab Wall Tile / Sheet Metal Details	1 wk	5/3/27
	EL-1 MTS Acceptance ◆	—	5/28/27
ELEVATOR 2 — OT			
	Demo – Hoistway Clearout (Amerivet)	2 wks	11/26/26
	Fire Protection Install & Inspection	1.5 wks	12/10/26
	Hoistway Electrical / Lighting	1.5 wks	6/1/27
	KONE Mechanical Installation	4 wks	6/1/27
	Security Camera / AV Routing (LV Elec.)	~1 wk	7/1/27
	Storefront Glazing Removal & Hardening	1.5 wks	6/1/27
	Stainless Steel Gates / Rollup Doors	1.5 wks	6/1/27
	Cab Flooring (Marine Ply + ROPP/Epoxy)	1 wk	8/2/27
	Cab Wall Tile / Sheet Metal Details	1 wk	8/2/27
	EL-2 MTS Acceptance ◆	—	8/27/27
ANCILLARY			
	Stair Demo — Overnight / OT	2 wks	5/3/27
	CIP Concrete — Landings, Treads, Nosings	2 wks	6/1/27
	New Steel Stairs / Handrails / Guardrails	2 wks	6/1/27
	Decorative Sheet Metal (Ext. Base / Glass)	2.5 wks	5/3/27
	Stucco Removal & Lath/WRB Repair	1.5 wks	5/3/27
	Re-Stucco & Paint (Scratch/Brown/Finish/Top)	2 wks	5/3/27
CLOSEOUT			
	Duplex Controller Switchover (Overnight)	0.5 wk	8/2/27
	Final Inspections / Punch List / As-Builts	1.5 wks	8/2/27
	MTS Acceptance Walk — PROJECT COMPLETE ◆	—	8/31/27

LEGEND

Demo / Fire Protection / Electrical
Cab Finishes / Sheet Metal
KONE Mechanical Insta
Ancillary Construction /
Design Deliver ables / C
◆ MTS Acceptance Mile
Hardening / Glazing / Site Civil
◆ Contractual Design Milestone (Scope §5)

5.4.11 Price Proposal

Structura Builders of California Joint Venture's proposed price for the base scope of work is **$2,463,982.00**. This price has been developed in accordance with the RFP and Contract Documents as amended by Addenda, and represents a firm, all-inclusive lump sum for the complete design and construction of the Work as described herein. In compliance with RFP Section 2.4, this Price Proposal shall remain open and valid for 120 days from the proposal submission date. A complete line-item breakdown, including the executed Price Proposal Form per Addendum No. 1 (revised 5/21/26), is provided in the Other Attachments section of this proposal.

5.4.12 Insurance Requirements

MOODY
INSURANCE AGENCY

February 9, 2026

RE: Amerivet Contracting & Structura Builders

Metropolitan Transit System – Request for Qualification From Design-Build Entities Grossmont Transit Center Elevator Modernization – MTS DOC NO. PWL455.0-26

To whom it may concern;

My name is Nick Langer and I have represented Amerivet Contracting & Structura Builders as respects their insurance and risk management programs since the inception of the business. This letter serves to confirm all coverage currently maintained by my client. I have detailed all current coverage and limits below:

- Commercial General Liability $1M Occurrence Limit / $2M Aggregate Limit
- Contractors Pollution Liability $1M Per Incident Limit / $2M Aggregate Limit
- Professional Liability $1M Per Incident Limit / $2M Aggregate Limit
- Commercial Auto Liability $2M Combined Single Limit
- Excess Auto Liability $5M $5M Occurrence Limit / $5M Aggregate Limit
- Workers Compensation $1M CA Statutory Limits with $2M Employers Liability Limit
- Excess Liability $5M Occurrence Limit / $5M Aggregate Limit (Excess over GL, PL, CPL, Employers Liability)

The insurers providing the coverage detailed above are all A.M. Best Rated (A, VII) or better.

Additionally, this letter serves to warrant, that upon request, my clients can bind coverage, put in place, Railroad Protective Liability under the following conditions:

- The insurer is California "Admitted" insurer, NOT an Excess and Surplus Lines insurer

- The insurer will carry an A.M Best rating no less than "A, VII"
- With limits no less than: $5,000,000 per occurrence / $10,000,000 general aggregate

Amerivet Contracting & Structura Builders has maintained and continues to maintain this type of insurance coverage on various projects in which the exposure exists. The coverage is placed and written on a project specific basis as needed. I can also confirm that there are not any limitations, losses or circumstances which would impede Amerivet Contracting & Structura Builders ability to quickly bind coverage on a project requiring Railroad Protective Liability.

If you have any questions or wish to discuss any of this in detail, please do not hesitate to contact me directly.

Kind Regards,

Nick Langer
Vice President Commercial Lines
nick.langer@moodyins.com Direct (661)
645-4974

Moody Insurance Agency | 28942 Hancock Parkway | Valencia, CA 91355 CA License
#0E24601

5.6. Life Cycle Cost Analysis

Description	Source / Basis	Amount	Total
Soft costs (design, mobilization, general conditions, permitting, staking, erosion controls)	*Price Proposal lines 1, 2, 2.1–2.4 | Addendum No. 1, rev. 5/21/26*	$389,740	**$389,740**
North elevator modernization (demolition, cab interior & doors, controller, hoistway, electrical, mechanical)	*Price Proposal lines 3.1–3.7*	$784,070	**$784,070**
West elevator modernization (demolition, cab interior & doors, controller, hoistway, electrical, mechanical)	*Price Proposal lines 4.1–4.7*	$794,070	**$794,070**
Stair tower renovations	*Price Proposal line 5*	$342,102	**$342,102**
Fire & life safety (CPUC/AHJ code compliance)	*Price Proposal line 6*	$154,000	**$154,000**
New elevator machine room	*Not in scope — existing machine rooms retained; $0 confirmed*	$-	**$-**
Section total			**$2,463,982**

Annual Maintenance & Upkeep (×15 years) — Operational Projection Only

Per RFP Q&A 2.11, ongoing service maintenance is not within the construction scope of this Project. The figures below are presented as a 15-year operational projection to support MTS's life-cycle evaluation per §5.6; they are not a contracted scope item under this proposal.

Description	Source / Basis	Annual	15-yr Total
Kone full-service maintenance (2 elevators @ $600/mo each)	*Kone San Diego GM (verbal, June 2026)*	$14,400	**$216,000**
Annual CPUC/AHJ inspection & permit (2 elevators)	*CPUC fee schedule est.*	$1,600	**$24,000**
Door components & hardware replacement allowance	*Industry allowance; non-proprietary parts per RFP §2.2.I*	$2,000	**$30,000**
Cab cleaning, graffiti removal & minor repairs (2 cabs)	*MTS operational estimate*	$1,800	**$27,000**
Security gate / rollup door hardware maintenance	*Vendor estimate*	$500	**$7,500**
Camera system maintenance (2 cabs)	*MTS IT/Security estimate*	$600	**$9,000**
Machine room HVAC / ventilation service	*Mechanical estimate*	$800	**$12,000**
Emergency power supply inspection & testing	*Service contract estimate*	$400	**$6,000**
Hoistway & pit cleaning, fluid-intrusion inspection	*Elevator mechanic estimate*	$1,000	**$15,000**
Annual total: $23,100 | 15-year subtotal:			**$346,500**

5.6.3. Operational Costs — Electricity Only (×15 years)

Description	Source / Basis	Annual	15-yr Total
Electricity — North elevator (5,500 kWh/yr × $0.39/kWh)	*5,500 kWh/yr benchmark (CIBSE Guide F); $0.39/kWh SDG&E avg. June 2026; per RFP §5.6*	$2,145	**$32,175**
Electricity — West elevator (5,500 kWh/yr × $0.39/kWh)	*Identical system & duty cycle*	$2,145	**$32,175**
Machine room lighting & ventilation (1,600 kWh/yr × $0.39)	*Est. 1,600 kWh/yr; $0.39/kWh SDG&E*	$624	**$9,360**
Cleaning supplies & fluid-intrusion remediation	*MTS custodial estimate*	$600	**$9,000**
Annual total: $5,514 | 15-year subtotal:			**$82,710**

5.6.4. Depreciation — Straight-Line to $0 Over 30 Years **Calculated**

Asset class	Installed	Life	Calc. basis	15-yr dep.	Book val. yr 15	Notes
Elevator mechanical (incl. fire & life safety)	$869,410	30 yr	*$869,410 ÷ 30 = $28,980/yr*	**$434,705**	$434,705	*50% retained yr 15*
Cab & interior components	$516,642	15 yr	*$516,642 ÷ 15 = $34,443/yr*	**$516,642**	$0	*Fully depreciated*
Control systems & electronics	$183,320	10 yr ×2	*Cycle 1 dep. yrs 1–10; replacement ~yr 10 (§2); Cycle 2 dep. yrs 11–15*	**$274,980**	$91,660	*5 yrs remaining cycle 2*

Asset class	Installed	Life	Calc. basis	15-yr dep.	Book val. yr 15	Notes
Electrical & wiring systems	$162,768	20 yr	*$162,768 ÷ 20 = $8,138/yr*	**$122,076**	$40,692	*25% retained yr 15*
Soft costs	$389,740	30 yr	*$389,740 ÷ 30 = $12,991/yr*	**$194,870**	$194,870	*50% amortized yr 15*
Total installed cost: $2,121,880				**$1,543,273**	**$761,927**	**35.9% retained**

5.6.5. Decommissioning & End-of-Life — Demolition Only

Description	Source / Basis	Amount
Full demolition of both elevator systems — no replacement assumed	*Proposer estimate at current market value per RFP §5.6; demolition only, no successor installation assumed*	**$100,000**
Section total		**$100,000**

15-Year Life Cycle Cost Summary

Cost category	Annual cost	15-yr total	Notes
§1 Construction & commissioning	—	**$2,463,982**	*Capital; Kone equip. pricing pending*
§2 Maintenance & upkeep	$23,100	**$346,500**	*Kone $600/mo/elevator; Kone San Diego GM*
§3 Operational costs (electricity)	$5,514	**$82,710**	*5,500 kWh/yr/elevator @ $0.39/kWh SDG&E*
§4 Depreciation (SL 30yr to $0)	—	**$1,543,273**	*Book value retained yr 15: $761,927 (35.9%)*
§5 Decommissioning (demolition)	—	**$100,000**	*Falls outside 15-yr window (~2056)*
Total 15-year life cycle cost (elevator scope)			**$4,536,465**

5.4.13 Exceptions/Deviations

1. INTRODUCTION

Structura Builders of California JV ("Design-Builder") submits this Exceptions and Deviations section in compliance with Section 5.7 of the RFP. Exceptions are organized as (A) **Technical Exceptions** and (B) **Contractual Exceptions**, with corresponding RFP section references and page numbers as required.

The Design-Builder's proposed approach replaces the existing Kone machineless traction (MRL) elevators with a newer equivalent MRL system. This like-for-like modernization strategy eliminates the need for certain scope elements that the RFP assumes, as described in the technical exceptions below. **All exceptions are offered to clarify scope and avoid unnecessary work; none reduce safety, code compliance, or the core project objective of delivering two fully modernized, vandal-resistant, code-compliant elevators.**

2. SUMMARY TABLE OF ALL EXCEPTIONS

The following table summarizes all exceptions submitted with this proposal. Full detail for each exception is

provided in Sections 3 and 4.

#	RFP Reference	Section / Attachment	Type	Summary Description
1	Attachment 2.0, §2.E (p. 3)	Scope of Work – New Machine Room	Technical	Design-Builder is replacing existing Kone MRL elevators with a newer equivalent MRL system; no new external machine room is required or being provided.
2	Attachment 2.0, §2.G (p. 3)	Scope of Work – Conversion of Equipment Rooms to Custodial Closets	Technical	Because no new machine room is being constructed, the existing equipment rooms will not be vacated and converted; they remain in use to support the MRL system.
3	Attachment 3, §11.1.4 (p. ~60)	General Conditions – Liquidated Damages ($750/day)	Contractual	Design-Builder requests express confirmation that LD accrual is tolled for excusable delays outside Design-Builder's reasonable control (MTS access restrictions, utility delays, AHJ scheduling, Force Majeure).
4	Attachment 3, §4.2.2 and §12.6	General Conditions – 24-Hour Differing Site Conditions Notice	Contractual	Requests that the 24-hour notice period be interpreted as 24 business hours for conditions discovered outside normal working hours, with initial telephonic/email notice within 24 calendar hours.

3. TECHNICAL EXCEPTIONS

The Design-Builder's proposed MRL replacement approach differs from certain scope assumptions embedded in the RFP. The following exceptions describe those differences and the Design-Builder's alternative approach.

T-1 No New Machine Room

RFP Reference: *Attachment 2.0, Scope of Work §2.E, p. 3*

RFP Requirement: *"The Design-Builder shall design and install a new elevator machine room located adjacent to the existing elevator tower, including all equipment necessary for operation of both elevators."*

Exception: The Design-Builder's proposed system is a machineless traction (MRL) elevator, which is a direct replacement for the existing Kone MRL units currently installed at Grossmont Transit Center. MRL technology integrates the drive machine, controller, and associated equipment within the hoistway or at the top of the shaft, eliminating the need for a dedicated external machine room. Because no new machine room is being constructed, Section 2.E of the Scope of Work — and its associated requirements regarding machine room siting, fluid intrusion controls, sealed door assemblies, and relocation of equipment into the new room — does not apply to this proposal.

Alternative Approach: All drive, control, and associated elevator equipment will be housed within the hoistway in accordance with the MRL system design. The replacement system will meet all applicable California Code of Regulations (CCR) Title 8 and ASME A17.1 requirements for machineless traction installations. Equipment

placement, access provisions, and maintenance access will be fully documented in the Design-Builder's 30% Design submittal for MTS review and concurrence.

T-2 No Conversion of Existing Equipment Rooms to Custodial / Storage Closets

RFP Reference: *Attachment 2.0, Scope of Work §2.G, p. 3*

RFP Requirement: *"The Design-Builder shall remove all equipment from the existing elevator machine rooms and the electrical and fire alarm panel room and convert these spaces into custodial/storage closets, including replacement of existing doors and door frames."*

Exception: This scope item is a direct consequence of the RFP's assumption that a new machine room would be constructed to receive all relocated equipment, leaving the existing equipment rooms vacant and available for conversion. Because the Design-Builder's MRL replacement approach does not include a new machine room, equipment currently housed in the existing machine rooms and the electrical and fire alarm panel room will remain in place or be redistributed within the existing spaces as required by the new system design. The existing equipment rooms will continue to serve their functional purpose and will not be converted into custodial or storage closets.

Alternative Approach: The Design-Builder will assess the existing equipment rooms as part of the Existing Conditions Assessment (NTP+30) and will identify any equipment that is obsolete or no longer required following the MRL modernization. Any such equipment will be removed and properly disposed of. The Design-Builder will present a plan for the final configuration and use of the existing equipment spaces at the 30% Design milestone for MTS review. All spaces will remain secured from public access in accordance with Performance Requirement §3.F of the Scope of Work.

4. CONTRACTUAL EXCEPTIONS

The Design-Builder submits the following contractual exceptions to Attachment 3 (General Conditions). These exceptions are offered to clarify specific provisions that present ambiguity in the context of an active transit station construction environment.

C-1 Liquidated Damages — Excusable Delay Tolling

RFP Reference: *Attachment 3, General Conditions §11.1.4, p. ~60*

RFP Provision: *"Design-Builder shall pay Owner $750 as liquidated damages for each day that Substantial Completion extends beyond the Scheduled Substantial Completion Date."*

Exception: The Design-Builder accepts the $750/day LD rate. However, the Design-Builder requests express contractual confirmation that LD accrual is tolled for delays caused by: (a) MTS's failure to grant required site access or elevator outage windows for inspections and construction; (b) utility owner delays outside the Design-Builder's control; (c) AHJ inspection scheduling delays beyond the Design-Builder's reasonable control; (d) Force Majeure events; or (e) MTS-directed changes that extend the critical path. These are consistent with General Conditions §11.2 and §11.3, and the Design-Builder requests that the parties confirm this understanding in writing in the executed contract.

Proposed Alternative: The Design-Builder requests a Supplemental Condition confirming that LD liability applies only to delays within the Design-Builder's reasonable control and that excusable delays shall be documented via the Notice of Contract Change procedure in §12.6 of the General Conditions. This is not a request to reduce the LD rate or aggregate cap; it is a request for clarity consistent with standard California public works practice.

C-2 Notice of Contract Change — 24-Hour Differing Site Conditions Notice

RFP Reference: *Attachment 3, General Conditions §4.2.2 and §12.6, pp. ~50 and ~65*

RFP Provision: *"Upon encountering a Differing Site Condition, Design-Builder shall provide prompt written notice to Owner of such condition, which notice shall not be later than twenty four (24) hours after Design-Builder has encountered such condition."*

Exception: Construction will occur within an active Bus and Trolley station that operates evenings and weekends. Differing site conditions may be encountered outside normal MTS business hours. A strict 24-calendar-hour written notice requirement is impractical when a condition is discovered on a Friday evening or during a holiday period and MTS's Procurement Officer is unavailable to receive formal written notice.

Proposed Alternative: The Design-Builder requests that the 24-hour notice period be interpreted as 24 business hours, measured from the next MTS business day when conditions are encountered outside normal business hours. The Design-Builder commits to providing initial telephonic or email notification to the MTS Project Manager within 24 calendar hours of encountering any such condition, with formal written notice to follow within 24 business hours. This preserves the intent of the notice requirement while accommodating the active transit operating environment.

5. STATEMENT OF NO OTHER EXCEPTIONS

Except as expressly set forth in Sections 3 and 4 above, Structura Builders of California JV takes no other exceptions to the requirements of the RFP, the Contract Documents, the Scope of Work, the General Conditions, the Project Labor Agreement (Attachment 4), MTS Board Policy 13 (Attachment 5), or any other Attachment to this RFP. The

Design-Builder accepts all other terms and conditions as stated.

The Design-Builder further confirms that:

- All required proposal forms have been completed and are included in this submission.
- The Certification Regarding Debarment, Suspension, and Other Responsibility Matters (§5.8) is submitted without exception.
- The Project Labor Agreement Acceptance Certification is submitted without exception.
- The Iran Contracting Act Certification, Non-Collusion Declaration, Workers' Compensation Certificate, and all other required certifications are submitted without exception.
- Insurance coverage meeting or exceeding the requirements of the Contract Documents is confirmed by the letter of insurability included in this proposal.

The Design-Builder acknowledges that MTS reserves the right to reject the proposal if any exception is deemed unacceptable, and that no exceptions may be requested after the proposal submission deadline (RFP §3.14, p. 18). The Design-Builder is willing to negotiate and resolve any exceptions during the Best and Final Offer or contract negotiation phase.

5.4.14 Other Required Forms

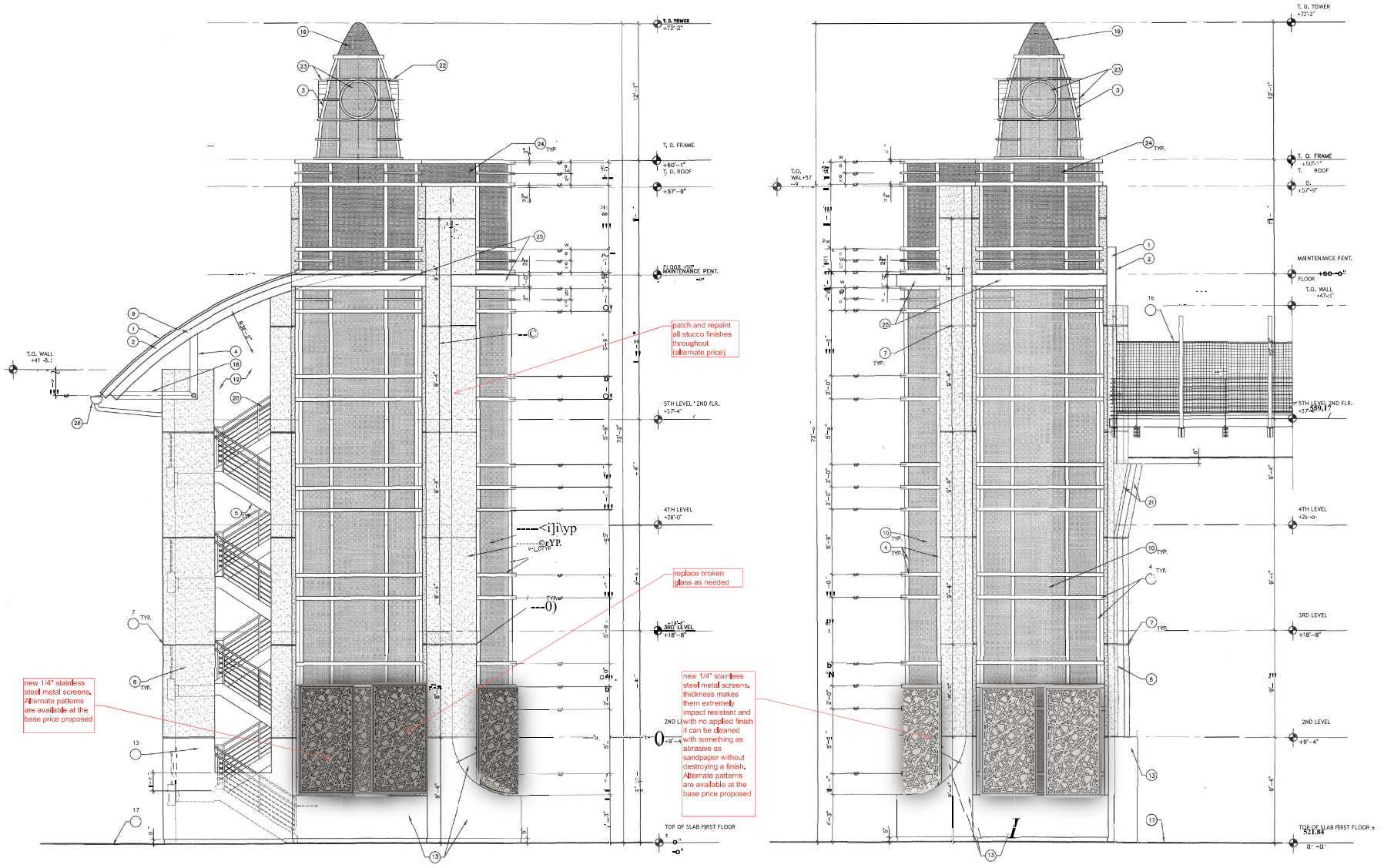

NORTH ELEVATION 02

1/4"=1'-0"

BUILDING ELEVATION KEYNOTES

ID:RANDING SEAM METAL ROOFING

0METTIL FASCIA

G) oLAZED, STEEL FRAMED DOME

0sTEEL FRAMING PER STRUCTURAL

STEEL STAIR

0 718"EXTERIOR STUCCO-SENERFLEX
W/SENERGY SAHARA DARK ACRYLIC
COLOR COAT

01• STUCCO CONTROL JOINT

G)PAINTED, BENT STEEL TUBE

@1/4" SOLAR GRAY LAMINATED GLASS

@WALL SCONCE LIGHT FIXIURE

@oPEN BEYOND

@REINFORCED, EXPOSED POLISHED CONCRETE WALL

@RAINWATER LEADER OUTFLOW

@ELEVA11ON BEYOND

@PEDESTRIAN BRIDGE

r,:::"EX1511NG PLATFORM W/ NEW ENHANCED (...)PAVING PER LANDSCAPE DRAWINGS

@PAINTED STEEL BRACKET

@ACRYLIC DOME

@PAINTED METAL RAILING

@WALL PEDIMENT

@cYLINDRICAL, PAINTED METAL CLOSURE

ROUND WINDOW (LOCATION OF FUTURE 'e/CLOCK(N.I.C))

Q 1/4" LAMINATED SPANDREL GLASS W/ r,:::)SPANDREL COA11NG ON NO. 4 FACE TO MATCH '<:::)SOLAR GRAY VISION GLASS (DENOTED BY DARKER SOLID SHADING PATTERN)

@PAINTED, BENT PLATE CLOSURE

@RAIN GUTTER

BE R

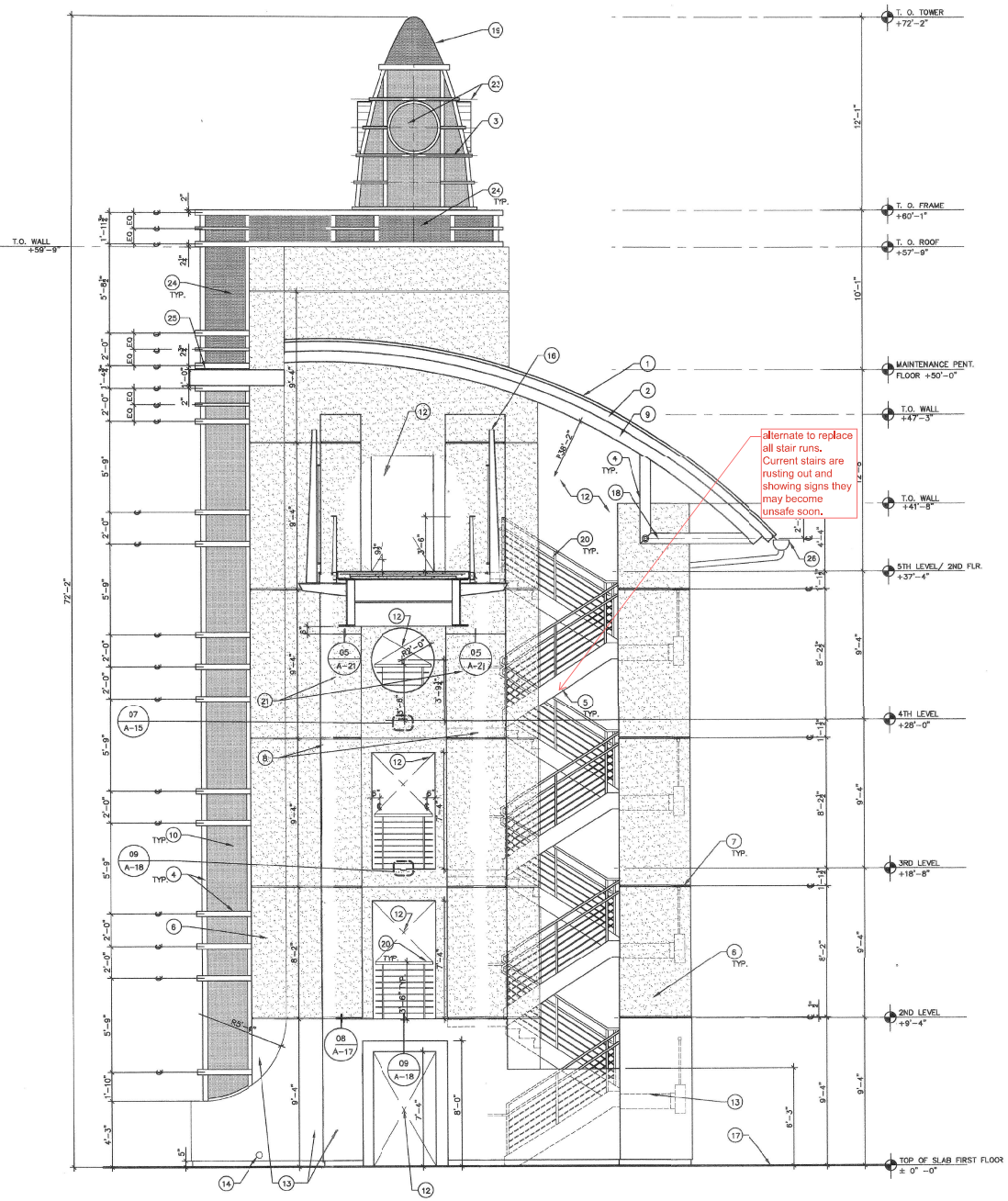

SOUTH ELEVATION 02

1/4"=1'-0"

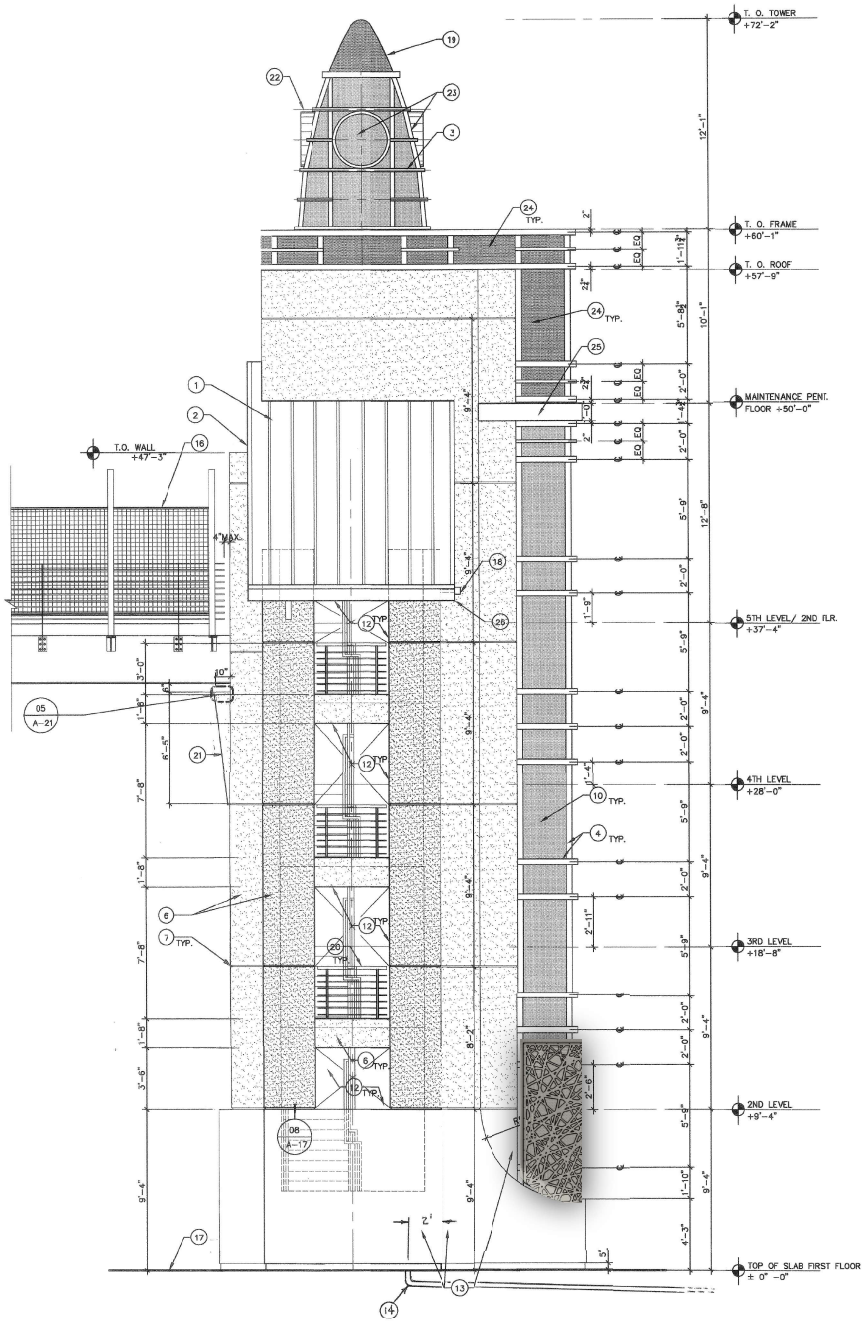

EAST ELEVATION 01

1/4"=1'-0"

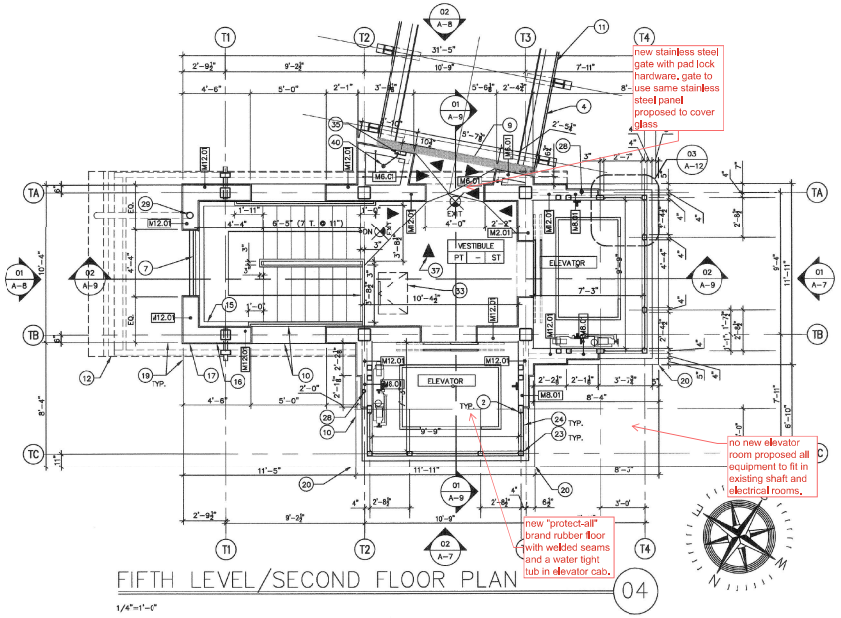

FIFTH LEVEL/SECOND FLOOR PLAN 04

1/4"=1'-0"

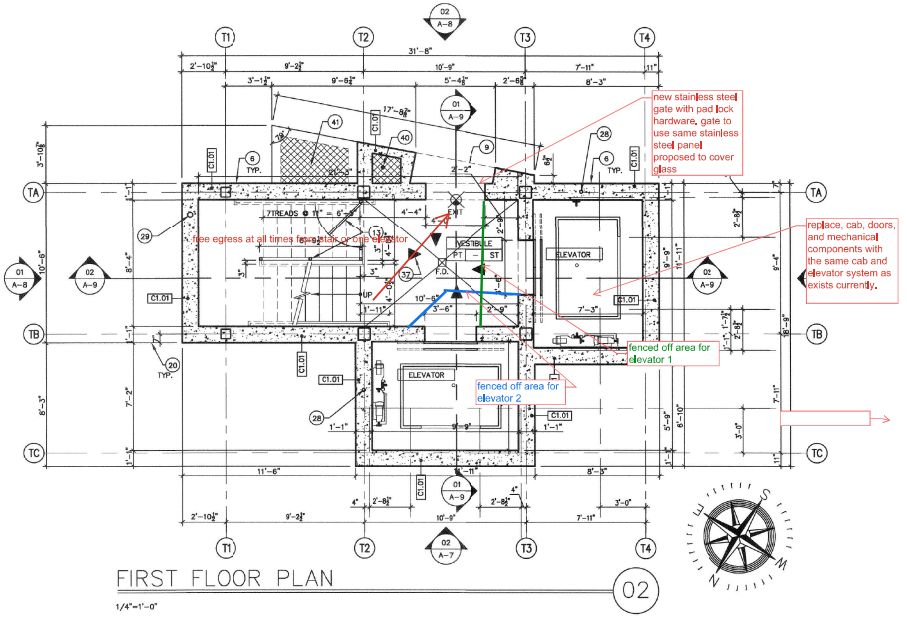

FIRST FLOOR PLAN 02

1/4"=1'-0"

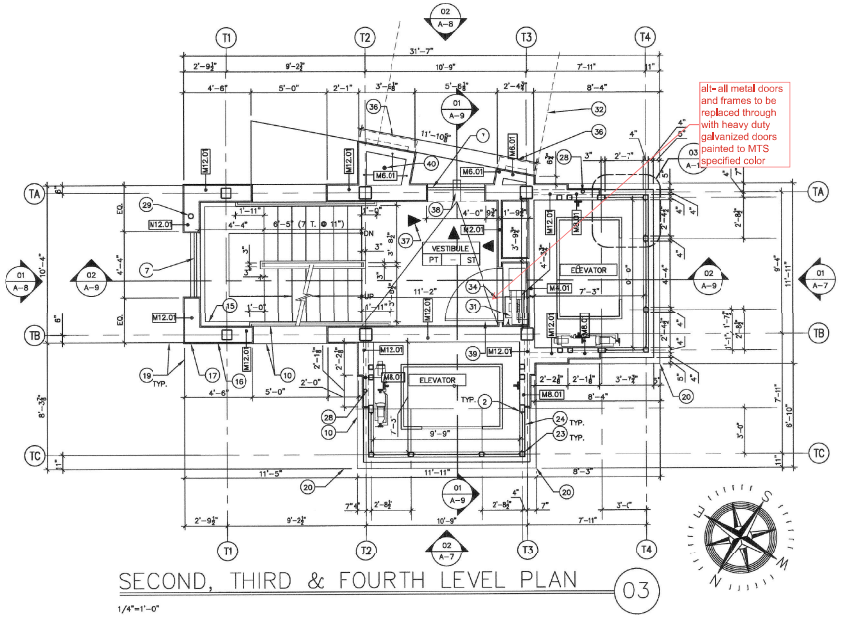

SECOND, THIRD & FOURTH LEVEL PLAN 03

1/4"=1'-0"

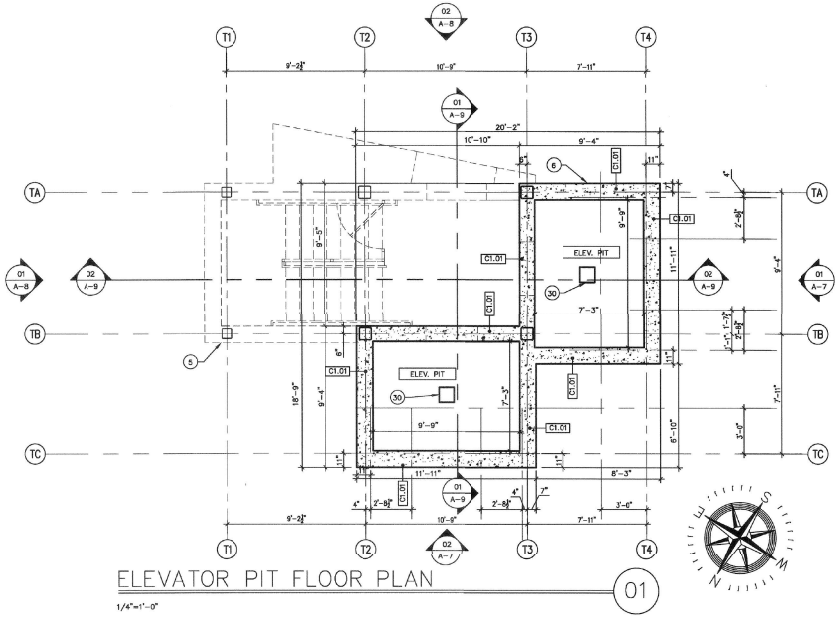

ELEVATOR PIT FLOOR PLAN 01

1/4"=1'-0"

FLOOR PLAN KEYNOTES

1. HORIZONTAL STEEL FRAMING MEMBER PER STRUCTURAL
2. VERTICAL STEEL FRAMING PER STRUCTURAL
3. GLAZED, STEEL FRAMED DOME
4. PEDESTRIAN BRIDGE
5. LINE OF FLOOR ABOVE
6. REINFORCED POLISHED CONCRETE WALL PER STRUCTURAL
7. 42" HIGH PAINTED METAL RAILING SEE BUILDING ELEVATIONS
8. STANDING SEAM METAL ROOF
9. LINE OF SOFFIT ABOVE
10. LINE OF CONCRETE SILL AT FIRST FLOOR
11. PEDESTRIAN BRIDGE
12. LINE OF ROOF ABOVE
13. PARTITION – HSS 2"x2"x¼" FRAME W/ WIRE MESH PANELS AND DOOR
14. ACCESS HATCH
15. HSS 12"x4" TUBE LEDGER
16. LINE OF STEEL STUD
17. LINE OF STUCCO
18. METAL SHIP LADDER
19. DIMENSION LINE TO FACE OF STEEL FRAMING
20. DIMENSION LINE TO FACE OF CONCRETE
21. BENT PLATE CLOSURE
22. STEEL PLATE COLUMN CAP – FLUSH W/ TOP OF ROOF SLAB – SEE STRUCT.
23. 4"x4" STL. TUBE VERT. FRAME – SEE STRUCT.
24. 4"x4" STL. TUBE HOR. FRAME – SEE STRUCT.
25. RAIN GUTTER.
26. 2'-0" HIGH X 2'-8" WIDE ACCESS DOOR TO ROOF
27. ROOF DRAIN & OVERFLOW DRAIN
28. R.W.L – RAINWATER LEADER – 2 1/2"ø CAST IRON PIPE IN WALL
29. R.W.L – RAINWATER LEADER – 4"ø CAST IRON PIPE IN WALL
30. ELEVATOR SUMP PIT 12"x12"x12"
31. ELEVATOR CONTROL CLOSET @ 3RD AND 4TH LEVEL
32. LINE OF BRIDGE ABOVE
33. ACCESS HATCH ABOVE
34. EXTERIOR THRESHOLD
35. HOSE BIBS BY ACORN ENGINEERING CO. – HOSE & SUPPLY BOXES B140 SERIES STAINLESS STEEL RECESSED HOSE BOX WITH WALL FLANGE OR EQUAL – CONNECT TO LANDSCAPE IRRIGATION SYSTEM.
36. LINE OF SPLAYED WALL PEDIMENT FRAMING PER ELEVATIONS, OCCURS ON 4TH FLOOR PLAN ONLY.
37. DIRECTION OF 1% SLOPE TO DRAIN
38. SHEET METAL SCUPPER
39. 3'-6" X 8'-0" HOLLOW METAL DOOR WITH MAINTENANCE LOCK SET, ALL THREE DOORS TO BE KEYED COMMON
40. IRRIGATION LINE UP TO 5TH. LEVEL
41. HDPE FOAM CORE PER STRUCTURAL

FINISH LEGEND

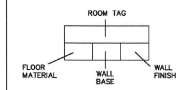

C- CONCRETE
PT- PEDESTRIAN TRAFFIC COATING
GB- GYPSUM BOARD
ST- STUCCO

AS BUILT
CONTRACT NO. C1P-1049700
RESIDENT ENGINEER'S SIGNATURE
DATE NOVEMBER 2013

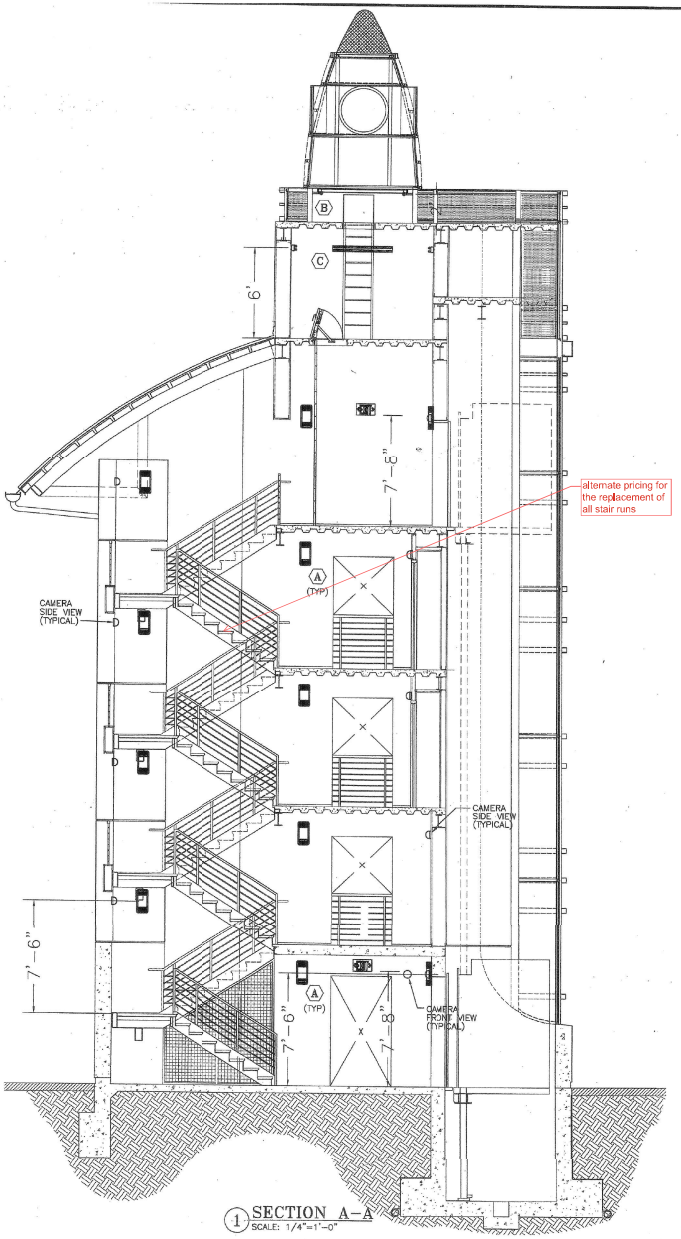

1 SECTION A–A
SCALE: 1/4"=1'-0"

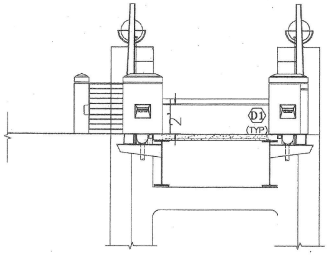

2 SECTION B–B
SCALE: 1/4"=1'-0"

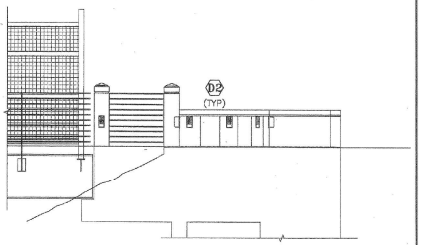

3 SECTION C–C
SCALE: 1/4"=1'-0"

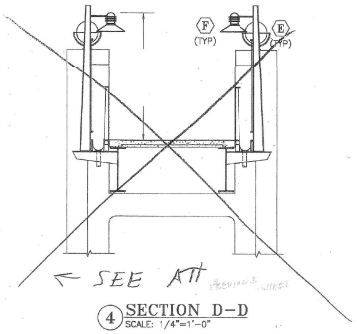

4 SECTION D–D
SCALE: 1/4"=1'-0"

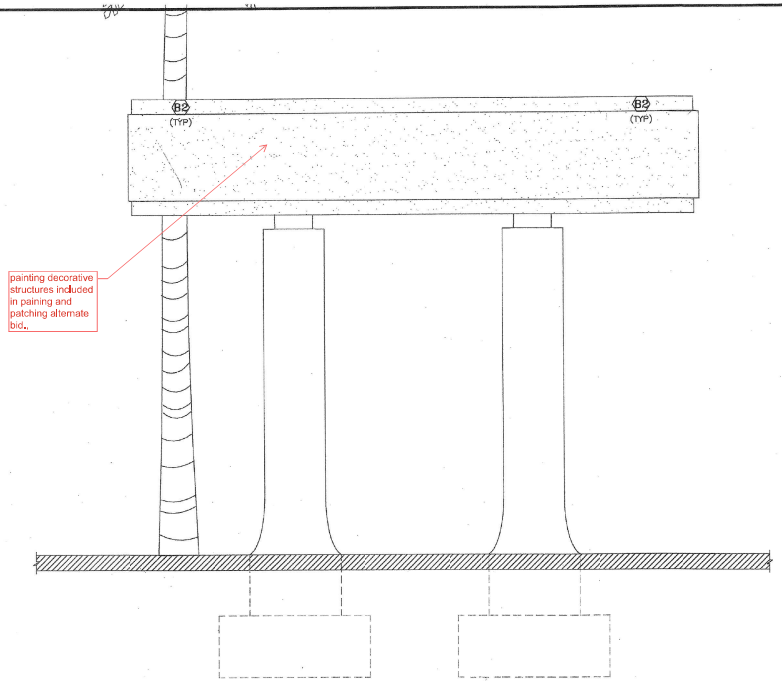

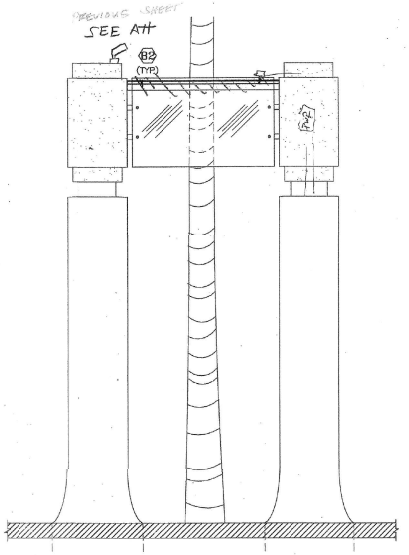

5 COLLONADE ELEVATION
SCALE: 1/4"=1'-0"

AS BUILT
CONTRACT NO. CIP 1049700
RESIDENT ENGINEER'S SIGNATURE
DATE NOVEMBER 2013

Fard Engineers, Inc.
www.fard.com
Consulting Engineers, Electrical/Mechanical
359 LENNON LANE, SUITE 200
WALNUT CREEK, CALIFORNIA 94598
(925) 932-5505 FAX: (925) 932-0555
TEL#07119 Grossmont Transit Platform

Planned extents of construction staging. Parking ramp staging not shown

Structura Builders
Building the future

ISAAC VELAZQUEZ

Pre-Construction / Project Coordinator & Scheduling:

Employment Length: 2 months

Industry Experience: 5 years

EDUCATION & CERTIFICATIONS

OSHA 30 Hour

First Aid & CPR Certified

Procore Certified

MTS Doc. No. PWL455.0-26
Project Role & Details

Proposed Role:
Scheduling

Proposed Percentage of Time Allocated to Project:
20%

Isaac is a construction preconstruction/project administrative professional who brings a well-rounded foundation to preconstruction and project coordination, with direct experience in contractor outreach, program scheduling, and administrative operations through his tenure at Associated Builders and Contractors. His exposure to how general contractors and subcontractors operate — combined with hands-on scheduling experience, strong data management skills, and an OSHA 30-Hour certification — makes him a detail-oriented, process-driven contributor capable of supporting preconstruction planning, timeline coordination, and documentation management.

PAST EXPERIENCE

Miralani Building Renovation– Project Coordinator

At Structura Builders, Isaac served as a dedicated on-site coordinator for the Miralani Building Renovation project, maintaining daily logs and holding subcontractors accountable to punch list completion to ensure work was progressing on schedule and to standard. He managed the administrative side of subcontractor relationships, processing invoices and coordinating change orders to keep documentation current and project finances accurately tracked. Isaac also contributed directly to project scheduling efforts while serving as the dedicated Site Safety Advocate, reinforcing a culture of compliance and accountability throughout the duration of the project.

1450 Hill St – Project Coordinator

On Structura Builders' Hill Street project, Isaac played a key role in the early stages of project execution by organizing job walks and leading subcontractor recruitment efforts to assemble the right trade partners for the scope of work. He took ownership of scheduling and sequencing responsibilities, ensuring that work was logically ordered and that trade activities were coordinated to minimize conflict and downtime on site. Throughout the project, Isaac served as the dedicated Site Safety Advocate, maintaining a consistent focus on safe work practices across all subcontractor teams.

Training Program Development* – Program Coordinator

In his role as ACE Coordinator, Isaac developed and scheduled construction-based training programs for a membership base of active contractors. Managing schedules, coordinating multiple stakeholders, and maintaining accurate records are skills that translate directly to preconstruction scheduling, submittal tracking, and bid coordination.

AMERIVET — CONTRACTING —

KENNETH ARNOLD

Kenneth Arnold is a seasoned construction professional with over 15 years of experience spanning both field superintendence and ownership-level project management. His hands-on expertise includes job site management, subcontractor supervision, scheduling, cost control, safety compliance, and quality control across a diverse range of project types — including commercial renovations, large-scale earthquake retrofits, and school modernization projects. Kenneth's ability to lead crews, read plans, perform masonry and earthwork layout, and operate heavy equipment makes him a highly capable and versatile superintendent who is equally effective in the field and in a leadership capacity.

Superintendent / Quality Assurance Manager:

Employment Length: 7 years

Industry Experience: 17 years

EDUCATION & CERTIFICATIONS

OSHA 30 Hour
EM385 Certified
Hazwoper
First Aid & CPR Certified
Procore Certified
Class A Licensed Driver

MTS Doc. No. PWL455.0-26
Project Role & Details

Proposed Role:
Quality Assurance Manager / Superintendent

Proposed Percentage of Time Allocated to Project:
20%

PAST EXPERIENCE

CalTrans Home Rehabilitation – Superintendent

At Amerivet Contracting, Kenneth Arnold served as Superintendent on a CalTrans-administered rehabilitation project involving the full renovation of three residential structures to meet CalTrans relocation standards. The scope of work was extensive, encompassing structural repairs, masonry, stucco, drywall, fireplace restoration, HVAC, and drainage improvements — requiring precise coordination across multiple trades to bring each home into full compliance. Kenneth oversaw all on-site operations from start to finish, managing subcontractor activities, enforcing quality control standards, and ensuring that all work was completed in accordance with CalTrans requirements and project specifications.

Sweetwater Union School District Olympian HS – Superintendent

Kenneth Arnold served as Superintendent on the Olympian High School Modernization project for the Sweetwater Union School District, overseeing a six-month scope of civil site work that included earthwork, grading, and boring operations. Kenneth managed all field operations and coordinated trade activities to ensure work was executed safely, efficiently, and in compliance with the project's technical specifications — delivering the civil and site improvement scope on schedule and to the quality standards required for a public educational facility.

Bancroft Safe Parking – Superintendent / Competent Person for Earthwork

Kenneth Arnold served as Superintendent and designated Competent Person for Earthwork on the Bancroft Safe Parking project under Turner Construction, overseeing an eight-month scope that included sewer mainline connection, plumbing infrastructure, asphalt paving, and electrical oversight. As the designated Competent Person for Earthwork, Kenneth maintained direct accountability for the safety and technical execution of all earthwork activities, ensuring all operations met OSHA standards and the quality expectations of Turner Construction throughout the project.

Kyle Smith - Lead Modernization and Installation Supervisor for San Diego

Kyle entered the elevator industry after serving as a Marine. Kyle became a licensed mechanic and now has twenty-five years' of industry experience. The last thirteen years with KONE San Diego. Kyle joined the IEUC apprentice program and shortly after became a CCCM licensed mechanic. He served as field mechanic in Service/Repair and Modernization for several OEM and Independent Elevator Contractors throughout his sixteen years of field experience. After Kyle's career as a field mechanic, he became a Service and Repair Superintendent for four years. His last five years he has been our San Diego Modernization and Construction Superintendent. Kyle has an active license under CCCM license number S36751.

Kyle is exceptionally well rounded, having experience in every aspect of our industry. From field experience in Service/Repair and Modernization to being a Superintendent for all three different lines of business in our industry. Kyle brings a thoughtful wealth of knowledge and pragmatic problem-solving to our team, earning the respect of all those who work with him.

Kyle's Project References:

1. San Diego International Airport Terminal 1:
   - Kyle was the Construction Superintendent for the new terminal one installation project from 2022-2025. This project was contracted through the Arrive Team which involved several General Contractors managing the project. KONE installed thirty-six traction elevators and twelve escalators. The first phase of construction began in 2022, and the second phase of the project is currently starting. This total project value was approximately $19.5 million dollars.

2. MTS Qualcomm Stadium Trolley Station:
   - Kyle was the Superintendent during the elevator modernization project at MTS Qualcomm Station located in San Diego, California. This project was a modernization on a two-stop hydraulic elevator and worked closely with ABC General Contracting throughout the implementation of this project. ABC General Contracting was contracted directly through MTS. This project was valued at $240,000.00 and completed in 2024.

3. Marriott Gaslamp:
   - KONE was hired directly through Marriott to complete an elevator modernization project for a high-rise hotel located in San Diego, California. This project was Supervised by Kyle, and he oversaw execution of this modernization from 2024-2026. The project consisted of six overhead traction modernizations. During implementation Kyle was responsible for tracking project timelines and ensuring that the other elevators in this multi car group configuration were optional to the public as the hotel remained in operation throughout implementation. KONE completed this project throughout the last two years and was completed earlier this year. The total value of this project was $2.6 million.

JUAN MENDOZA

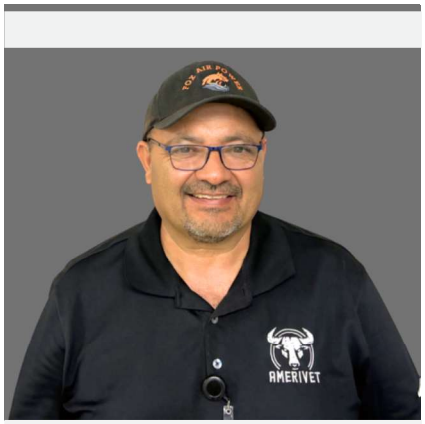

Construction Manager / Cost Controls & Budgeting Manager:

Employment Length: 7 months

Industry Experience: 26 years

EDUCATION & CERTIFICATIONS

OSHA 30 Hour

EM385 Certified

First Aid & CPR Certified

Procore Certified

MTS Doc. No. PWL455.0-26
Project Role & Details

Proposed Role:
Construction Manager / Cost Controls & Budgeting Manager

Proposed Percentage of Time Allocated to Project:
20%

*prior experience

Juan brings over 20 years of construction industry experience to his role as Project Manager, with a proven track record of running a full-service construction operation from the ground up. As the owner of Primos Painting and Construction, Juan personally managed contracts, scheduling, field operations, and all project finances — giving him an ownership-minded approach to cost controls and budgeting that protects the client's investment at every phase. His ability to lead multi-trade teams, control costs, and deliver projects with full financial accountability makes him a uniquely well-rounded project manager.

PAST EXPERIENCE

Miralani Building Renovation– Project Manager

At Structura Builders, Juan Menoza served as the on-site Project Manager for the Miralani Building Renovation, acting as the direct supervisor to both the self-perform crew and all subcontractor teams — providing day-to-day direction, enforcing quality standards, and driving punch list accountability. He managed all project scheduling and handled the administrative side of subcontractor relationships, including invoicing and change order coordination, while serving as the dedicated Site Safety Advocate throughout the duration of the project.

FEI Building (McAllen, TX) – Business Owner/Project Manager

As the owner of Primos Painting and Construction, Juan Menoza was engaged as a subcontractor on the FEI Building renovation in McAllen, Texas — a comprehensive interior scope encompassing framing, drywall installation, tape and float finishing, flooring, and painting. Over the four-month project, Juan self-performed work with a crew of eight while coordinating alongside approximately six other subcontractor teams, managing his operations within the broader project schedule and maintaining quality standards that met the general contractor's expectations.

Border Fence (Brownfield, TX) – Business Owner/Project Manager

As the owner of Primos Painting and Construction, Juan Menoza was engaged as a subcontractor on a federally administered border fence restoration project in Brownsville, Texas, performing full surface sandblasting, priming, and painting over a six-month performance period. Given the project's sensitive location, work was conducted under the direct oversight of environmental inspectors and on-site ecologists, requiring strict adherence to federal environmental compliance standards. Juan's ability to successfully deliver this scope within a highly regulated, federally monitored environment demonstrates his readiness to perform on government contracts where compliance and professional accountability are paramount.

IRAN CONTRACTING ACT CERTIFICATION

(Public Contract Code Section 2200 *et seq.*)

As required by California Public Contract Code Section 2204, the Contractor certifies subject to penalty for perjury that the option checked below relating to the Contractor's status in regard to the Iran Contracting Act of 2010 (Public Contract Code Section 2200 *et seq.*) is true and correct:

1. The Contractor is not:

   a. identified on the current list of persons and entities engaging in investment activities in Iran prepared by the California Department of General Services in accordance with subdivision (b) of Public Contract Code Section 2203; or

   b. a financial institution that extends, for 45 days or more, credit in the amount of $20,000,000 or more to any other person or entity identified on the current list of persons and entities engaging in investment activities in Iran prepared by the California Department of General Services in accordance with subdivision (b) of Public Contract Code Section 2203, if that person or entity uses or will use the credit to provide goods or services in the energy sector in Iran. ☑

2. MTS has exempted the Contractor from the requirements of the Iran Contracting Act of 2010 after making a public finding that, absent the exemption, MTS will be unable to obtain the goods and/or services to be provided pursuant to the Contract. ☐

3. The amount of the Contract payable to the Contractor for the Project does not exceed $1,000,000. ☐

Note: In accordance with Public Contract Code Section 2205, false certification of this form shall be reported to the California Attorney General and may result in civil penalties equal to the greater of $250,000 or twice the Contract amount, termination of the Contract and/or ineligibility to bid on contracts for three years.

ACKNOWLEDGED AND AGREED

Contractor Name: Amerivet Contracting

Title: CEO

Signature: Trey W Bowman

Date: 06/22/2026

WORKERS' COMPENSATION CERTIFICATE

Labor Code Section 3700 provides, in relevant part:

Every employer except the State shall secure the payment of compensation in one or more of the following ways:

(a) By being insured against liability to pay compensation in one or more insurers duly authorized to write compensation insurance in this State.

(b) By securing from the Director of Industrial Relations a certificate of consent to self-insure, which may be given upon furnishing proof satisfactory to the Director of Industrial Relations of ability to self-insure and to pay any compensation that may become due to his employees.

I am aware of the provisions of Section 3700 of the Labor Code which require every employer to be insured against liability for workers' compensation or to undertake self-insurance in accordance with the provisions of that code, and I will comply with such provisions before commencing the performance of the work of this contract.

Contractor Name:
Amerivet Contracting

By: Trey W. Bowman

Name: Trey W. Bowman

Its: CEO

In accordance with article 5 (commencing at Section 1860), chapter 1, part 7, division 2 of the Labor Code, the above certificate must be signed and filed with Owner prior to performing any work under the Contract.

NON-COLLUSION DECLARATION

TO BE EXECUTED BY PROPOSER AND SUBMITTED WITH OFFER

(23 U.S.C. § 112(c) and California Public Contract Code § 7106)

The undersigned declares:

I am the CEO of Amerivet contracting & Structura Builders of California, the party making the foregoing offer.
The offer is not made in the interest of, or on behalf of, any undisclosed person, partnership, company, association, organization, or corporation. The offer is genuine and not collusive or sham. The proposer has not directly or indirectly induced or solicited any other proposer to put in a false or sham offer. The proposer has not directly or indirectly colluded, conspired, connived, or agreed with any proposer or anyone else to put in a sham offer, or to refrain from submitting an offer. The proposer has not in any manner, directly or indirectly, sought by agreement, communication, or conference with anyone to fix the offer price of the proposer or any other proposer, or to fix any overhead, profit, or cost element of the offer price, or of that of any other proposer. All statements contained in the offer are true. The proposer has not, directly or indirectly, submitted his or her offer price or any breakdown thereof, or the contents thereof, or divulged information or data relative thereto, to any corporation, partnership, company, association, organization, offer depository, or to any member or agent thereof, to effectuate a collusive or sham offer, and has not paid, and will not pay, any person or entity for such purpose.
Any person executing this declaration on behalf of the proposer that is a corporation, partnership, joint venture, limited liability company, limited liability partnership, or any other entity, hereby represents that he or she has full power to execute, and does execute, this declaration on behalf of the proposer.
I declare under penalty of perjury under the laws of the State of California that the foregoing is true and correct and that this declaration is executed on June 5th 2026 (date), at San Diego (city), California (state).

ACKNOWLEDGED AND AGREED

Name of Contractor: Amerivet Contracting and Structura Builders of California JV

Signature:

Date: 06/05/2026

FLEET COMPLIANCE CERTIFICATION FORM

Proposer hereby acknowledges that they have reviewed the California Air Resources Board's policies, rules and regulations and are familiar with the requirements of Title 13, California Code of Regulations, Division 3, Chapter 9, which went into effect on January 1, 2024 (the "Regulation"). Proposer hereby certifies, subject to penalty for perjury, that the option checked below relating to the Proposer's fleet, and/or that of their subcontractor(s) ("Fleet") is true and correct:

- ☑ The Fleet is subject to the requirements of the Regulation, and the appropriate Certificate(s) of Reported Compliance have been attached hereto.
- ☐ The Fleet is exempt from the Regulation under section 2449.1(f)(2), and a signed description of the subject vehicles, and reasoning for exemption has been attached hereto.
- ☐ Bidder and/or their subcontractor is unable to procure R99 or R100 renewable diesel fuel as defined in the Regulation pursuant to section 2449.1(f)(3). Bidder shall keep detailed records describing the normal refueling methods, their attempts to procure renewable diesel fuel and proof that shows they were not able to procure renewable diesel (i.e. third party correspondence or vendor bids).
- ☐ The Fleet is exempt from the requirements of the Regulation pursuant to section 2449(i)(4) because this Project has been deemed an Emergency, as defined under section 2449(c)(18). Bidder shall only operate the exempted vehicles in the emergency situation and records of the exempted vehicles must be maintained, pursuant to section 2449(i)(4).
- ☐ The Fleet does not fall under the Regulation or are otherwise exempted and a detailed reasoning is attached hereto.

Name of Proposer: Amerivet Contracting

Signature: Trey W Bowman

Name: Trey W Bowman

Title: CEO / CFO

Date: 06/05/2026

California Environmental Protection Agency

Air Resources Board

January 1, 2026

CERTIFICATE OF REPORTED COMPLIANCE
OFF-ROAD DIESEL VEHICLE REGULATION

is issued to

AMERIVET CONTRACTING

This certificate indicates that the fleet listed above has reported off-road diesel vehicles to the California Air Resources Board and has certified they are in compliance with title 13 CCR, section 2449. All applicable vehicles owned by the individual, company, or agency must be reported and labeled, as specified in Section 2449, with all possible completeness, else this certificate is null and void. **Certificate expires 2/28/2027**

Michelle Buffington

Michelle Buffington
Chief, Mobile Source Control Division
California Air Resources Board

Off-road Diesel Fleet Identification

175951

To verify the authenticity of this certificate, enter this number at
http://www.arb.ca.gov/doors/compliance_cert1.html

PUBLIC WORKS CONTRACTOR REGISTRATION CERTIFICATION

Pursuant to Labor Code sections 1725.5 and 1771.1, all contractors and subcontractors that wish to submit a proposal or enter into a contract to perform public work must be registered with the Department of Industrial Relations. See http://www.dir.ca.gov/Public-Works/PublicWorks.html for additional information.

No proposal will be accepted nor any contract entered into without proof of the contractor's and subcontractors' current registration with the Department of Industrial Relations to perform public work.

Proposer hereby certifies that it is aware of the registration requirements set forth in Labor Code sections 1725.5 and 1771.1 and is currently registered as a contractor with the Department of Industrial Relations.

Proposer further acknowledges:

(1) Proposer shall maintain a current DIR registration for the duration of the project.

(2) Proposer shall include the requirements of Labor Code sections 1725.5 and 1771.1 in its contract with subcontractors and ensure that all subcontractors are registered at the time of Proposal submission and maintain registration status for the duration of the project.

ACKNOWLEDGED AND AGREED

Name of Proposer:	Amerivet Contracting
DIR Registration Number:	1000379724
DIR Number Expiration Date:	06/30/2028
Name and Title:	Trey W Bowman, CEO/CFO
Signature:	
Date:	06/05/2026

CALIFORNIA PUBLIC RECORD ACT (PRA) ACKNOWLEDGEMENT

I/We hereby represent, acknowledge, and agree as follows:

1. MTS is a California public agency established by California Public Utilities Code, Section 120000. et. seq., and is subject to the California PRA (Government Code sec. 6250 et seq.) which provides generally that all records relating to a public agency's business are open to public inspection unless exempted from disclosure by law.

2. The proposal I/we have submitted to MTS is open to public inspection under PRA unless it is exempted from disclosure by law.

3. To the extent the proposal includes materials that I/we believe are exempt from disclosure under PRA, **I/we understand that I/we must provide a letter identifying the materials that I/we believe are exempt from disclosure and explaining the basis for exemption.**

4. Any materials not identified as exempt from disclosure are open to public inspection, and I/we waive any right to subsequently claim exemption from disclosure for such materials.

5. MTS at all times retains the right to make the final determination regarding what, if any, portion of a proposal is subject to disclosure under PRA.

6. Use of headers/footers bearing designations such as “confidential”, “proprietary”, or “trade secret” on all or nearly all of a proposal which would prohibit or limit public inspection is not acceptable and may deem the proposal non-responsive and may be rejected; labeling a page as such does not prohibit MTS from disclosing the page in response to a PRA response or in the ordinary cause of business if MTS concludes it is obligated to so by applicable law.

7. To defend and indemnify MTS in any action on a PRA request for any of the contents of a proposal marked Trade Secret, Confidential or Proprietary.

8. Marking a document as “trade secret”, “confidential” or “proprietary” without the express written permission of MTS does not exempt a document from disclosure to third parties under state or federal law, or in the normal course of MTS’s business operations. MTS has no obligation to get a respondent’s permission before producing such documents.

9. The proposal I/we have submitted *(check one of the following)* materials that we believe are exempt from disclosure under PRA.

INCLUDES ☐

DOES NOT INCLUDE ☒

ACKNOWLEDGED AND AGREED

Company Name: Amerivet Contracting

Title: CEO

Signature: Trey W. Bowman

Date: 05/29/2026

PROJECT LABOR AGREEMENT ACCEPTANCE CERTIFICATION

(Only to be completed if proposing new Design-Build Team Members or Subcontractors)

COMMITMENT TO COMPLY WITH PROJECT LABOR AGREEMENT (PLA) REQUIREMENTS

Proposer, on behalf of itself and subcontractor(s) at every tier, hereby commits to comply with MTS's Project Labor Agreement for all work on the Project. As a condition of contract award, the Proposer shall submit its Letter of Assent to MTS's Project Labor Coordinator and all subcontractors shall submit their Letter of Assent before commencing any Work on the Project.

NOTE: Failure to submit this Commitment to Comply with PLA Requirements Form at the time of Proposal submittal may render the Proposal non-responsive.

ACKNOWLEDGED AND AGREED

Print Name: Trey W. Bowman

Signature:

Date: 05/29/2026

CERTIFICATION REGARDING DEBARMENT, SUSPENSION AND OTHER INELIGIBLE AND VOLUNTARY EXCLUSIONS LOWER THAN TIER COVERED TRANSACTIONS

CONTRACTOR AND SUBCONTRACTOR'S STATEMENT OF ELIGIBILITY
(Provide one completed Form for the Prime Contractor and any Subcontractors)

The prime/subcontractor certifies or affirms the truthfulness and accuracy of the contents of the statements submitted on or with this certification.

QUESTIONNAIRE

Has the Contractor, or any officer, principal, affiliates or employee of the Contractor ever been debarred, suspended, proposed for debarment, declared ineligible or otherwise prevented from bidding/proposing on, or completing a federal, state, or local government project?

- ☐ Yes
- ☑ No

If the answer is yes, or where the prime/subcontractor is unable to certify any of the statements in the above certifications, such prime/subcontractor shall attach an explanation (i.e. date, background, resolution) with this form.

Note: Failure to provide this form at the time of Bid/Proposal will not result in a finding of a non-responsive bid/proposal. Submittal of this form for The Prime Contractor and all Subcontractors is required for a Proposer to be deemed "Responsible." MTS encourages Proposers to complete and submit all forms at the time of bid/proposal.

SUBCONTRACTOR (Copy this form if needed for additional subcontractors)		**PRIME CONTRACTOR**	
Business Name:		Business Name:	Amerivet Contracting
License No. (if applicable):		License No. (if applicable):	1059200
DUNS No.:		DUNS No.:	N/A

ACKNOWLEDGED AND AGREED

Print Name:		Print Name:	Trey W Bowman
Title:		Title:	CEO/CFO
Signature:		Signature:	
Date:		Date:	06/05/26

CERTIFICATION REGARDING DEBARMENT, SUSPENSION AND OTHER INELIGIBLE AND VOLUNTARY EXCLUSIONS LOWER THAN TIER COVERED TRANSACTIONS

CONTRACTOR AND SUBCONTRACTOR'S STATEMENT OF ELIGIBILITY
(Provide one completed Form for the Prime Contractor and any Subcontractors)

The prime/subcontractor certifies or affirms the truthfulness and accuracy of the contents of the statements submitted on or with this certification.

QUESTIONNAIRE

Has the Contractor, or any officer, principal, affiliates or employee of the Contractor ever been debarred, suspended, proposed for debarment, declared ineligible or otherwise prevented from bidding/proposing on, or completing a federal, state, or local government project?

- ☐ Yes
- ☑ No

If the answer is yes, or where the prime/subcontractor is unable to certify any of the statements in the above certifications, such prime/subcontractor shall attach an explanation (i.e. date, background, resolution) with this form.

Note: Failure to provide this form at the time of Bid/Proposal will not result in a finding of a non-responsive bid/proposal. Submittal of this form for The Prime Contractor and all Subcontractors is required for a Proposer to be deemed "Responsible." MTS encourages Proposers to complete and submit all forms at the time of bid/proposal.

SUBCONTRACTOR (Copy this form if needed for additional subcontractors)		**PRIME CONTRACTOR**	
Business Name:	KONE Inc. San Diego Branch	Business Name:	Amerivet Contracting
License No. (if applicable):	C-11 179166	License No. (if applicable):	1059200
DUNS No.:	00-526-2308	DUNS No.:	N/A

ACKNOWLEDGED AND AGREED

Print Name:	John Holzenthaler	Print Name:	Trey W Bowman
Title:	Account Executive	Title:	CEO/CFO
Signature:	John Holzenthaler	Signature:	Trey W Bowman
Date:	6/5/2026	Date:	06/05/26

SAFETY DEPARTMENT SAFETY RULES

MTS Contractual Agreement with Outside Agencies
Work on MTS Premises

A. Safety Rules

These safety rules apply specifically to Contractors, Contractor's employees, or sub-Contractors working on Metropolitan Transit System (MTS) property. Any loss or damage, including death, resulting from Contractors, Contractor's employees, or subcontractor's negligence shall hold MTS management and employees harmless from any such loss. No work shall be performed on MTS property without approval and proper permits, when required. Requirements:

1. Comply with Cal OSHA, state, local and MTS' safety, and environmental policies.
2. Observe and follow all posted facilities safety regulations.
3. Use the proper Personal Protective Equipment required for the job.
4. No illegal drugs or alcohol will be consumed on site or off the premises while working for MTS.

B. Use of Tools and Equipment (when required)

1. Required Tools and Equipment must be in good condition, safe for use and calibrated (if required).
2. Follow safe engineering work practices/procedures.
3. Wear the required personal protective equipment when using tools.

C. Machinery and Vehicles (when required)

1. Do not attempt to operate MTS machinery or equipment without special permission.
2. Only licensed operators may operate Forklift Trucks and other equipment on MTS occupied spaces.

D. Contractor Requirements (when required)

1. Valid Contractor's license number.

ACKNOWLEDGED AND AGREED

Company Name:	Amerivet Contracting
Print Name:	Trey W. Bowman
Title:	CEO
Signature:	
Date:	06/04/2026

CAMPAIGN CONTRIBUTION DISCLOSURE FORM

COPY THIS FORM IF NEEDED FOR ADDITIONAL ENTIRES.

The current MTS Board members are listed HERE.

Firm Name: Amerivet Contracting

Address: 8270 Miralani Dr.
Street

San Diego | CA | 92126
City | State | Zip

Phone: 858-208-3638

Title of pending license, permit, or other entitlement for use (including a contract or amendment) that pertains to the Party in the manner described in Government Code Section 84308(a):

[Title]
[Subject]

Date of MTS Board meeting when the license, permit, or other entitlement for use (including contract or amendment) is scheduled for MTS Board consideration (for RFPs this will be an estimated date at the time the solicitation is published):

Date

Name(s) of MTS member(s) or officer(s) to whom the Proposer, a participant, or either's agent made campaign contributions aggregating more than $250 within the time period specified in Government Code Section 84308(b) or (c):

Disclosure Information	
Name of Board Member or Officer:	
Name of Contributor:	
Date(s):	
Amount:	
Disclosure Information	
Name of Board Member or Officer:	
Name of Contributor:	
Date(s):	
Amount:	

By signing below, I acknowledge that no contribution(s) aggregating more than $250 were made by the Consultant or its agents to an MTS Board Member or Officer within the time period specified in Government Code Section 84308(b) or (c).

ACKNOWLEDGED AND AGREED

Signature of Party and/or Party's Agent: Trey W. Bowman

Date: 06/05/26

ORGANIZATIONAL CONFLICTS OF INTEREST CERTIFICATION FORM

The undersigned hereby certifies as follows:

1. Amerivet Contracting ("Proposer") is aware organizational conflicts of interest are created by circumstances arising out of consultants' or contractors' existing or past activities, business or financial interests, familial relationships, contractual relationships, or organizational structure (e.g., parent entities, subsidiaries, affiliates) that result in: (i) impairment or potential impairment of consultants' or contractors' ability to render impartial assistance or advice to MTS, (ii) impairment or potential impairment of consultants' or contractors' objectivity in performing work for MTS, (iii) an unfair competitive advantage for any proposer with respect to MTS's procurement (including, but not limited to, through access to nonpublic information or assisting MTS in the preparation of a Request for Qualifications (RFQ), Request for Information (RFI), Request for Proposals (RFP), Invitation for Bids (IFB), or the resultant contract); or a perception or appearance of impropriety or unfair competitive advantage with respect to any of MTS's procurements or contracts (irrespective of whether such perception is accurate)

2. Proposer is aware that organizational conflicts of interest may exist in the following circumstances: a) A Proposer is MTS's general engineering or architectural consultant for the design-build project. However, a sub-consultant of the general engineering or architectural consultant that has not yet performed work on the contract to provide services for the design-build project may participate as a Proposer or join a design-build team if the Proposer terminates the agreement to provide work and provides no work for MTS's general engineering or architectural consultant on the design-build project. b) A Proposer has conducted preliminary design services for the design-build project such as conceptual layouts, preliminary design, or preparation of bridging documents. c) A Proposer performed design work related to the design-build project for other stakeholders in the design-build project. d) A Proposer performed design work on a previous contract that specifically excludes the Proposer from participating as a Proposer or joining any design-build team for the design-build project. e) A firm has assisted or is assisting MTS in the management of the project or contract, including the preparation of the RFP, evaluation criteria, or any other aspect of the procurement. f) A Proposer is under contract with any other entity or stakeholder to perform oversight of the design-build project. g) Any circumstances that would violate California Government Code Section 1090, *et seq.* (Contractual conflicts). h) A firm that is or has acted as MTS's general engineering or architectural consultant shall not participate in the review and analysis of or render opinions regarding the firm's own work performed on an MTS project.

3. A diligent search of the relationships and interests of Proposer, its officers, employees, and agents has been conducted to determine whether any

organizational conflict of interest may exist relating to or resulting from the Project or any contract that may be entered as a result of this RFQ/RFP. (Mark one, below, with an "x")

☑ No organizational conflict of interests or a potential organizational conflict of interests exist.

☐ Proposer, its officers, employees, and agents have identified one or more organizational conflict of interest, or a potential organizational conflict of interest. A description of each actual or potential organizational conflict of interest, and measures to avoid, neutralize, or mitigate the actual or potential organizational conflict of interest is attached.

4. If an organizational conflict of interest, or a potential organizational conflict of interest, is discovered at any time in the future Proposer will submit an updated Organizational Conflicts of Interest Disclosure, notifying MTS of the existence and nature of the conflict, or potential conflict, within three (3) working days following the discovery of the actual or potential organizational conflict of interest.

Isaac Velazquez
_____
Signature

Isaac Velazquez
_____
Printed Name

6/3/2026
_____
Date

Structura Joint Venture Amerivet
_____
Design-Build Entity Member

Failure of any identified Team Member to complete this form may result in the entire Design-Build team being determined ineligible for award.

ORGANIZATIONAL CONFLICTS OF INTEREST CERTIFICATION FORM

The undersigned hereby certifies as follows:

1. Structura Builders Inc. ("Proposer") is aware organizational conflicts of interest are created by circumstances arising out of consultants' or contractors' existing or past activities, business or financial interests, familial relationships, contractual relationships, or organizational structure (e.g., parent entities, subsidiaries, affiliates) that result in: (i) impairment or potential impairment of consultants' or contractors' ability to render impartial assistance or advice to MTS, (ii) impairment or potential impairment of consultants' or contractors' objectivity in performing work for MTS, (iii) an unfair competitive advantage for any proposer with respect to MTS's procurement (including, but not limited to, through access to nonpublic information or assisting MTS in the preparation of a Request for Qualifications (RFQ), Request for Information (RFI), Request for Proposals (RFP), Invitation for Bids (IFB), or the resultant contract); or a perception or appearance of impropriety or unfair competitive advantage with respect to any of MTS's procurements or contracts (irrespective of whether such perception is accurate)

2. Proposer is aware that organizational conflicts of interest may exist in the following circumstances: a) A Proposer is MTS's general engineering or architectural consultant for the design-build project. However, a sub-consultant of the general engineering or architectural consultant that has not yet performed work on the contract to provide services for the design-build project may participate as a Proposer or join a design-build team if the Proposer terminates the agreement to provide work and provides no work for MTS's general engineering or architectural consultant on the design-build project. b) A Proposer has conducted preliminary design services for the design-build project such as conceptual layouts, preliminary design, or preparation of bridging documents. c) A Proposer performed design work related to the design-build project for other stakeholders in the design-build project. d) A Proposer performed design work on a previous contract that specifically excludes the Proposer from participating as a Proposer or joining any design-build team for the design-build project. e) A firm has assisted or is assisting MTS in the management of the project or contract, including the preparation of the RFP, evaluation criteria, or any other aspect of the procurement. f) A Proposer is under contract with any other entity or stakeholder to perform oversight of the design-build project. g) Any circumstances that would violate California Government Code Section 1090, *et seq.* (Contractual conflicts). h) A firm that is or has acted as MTS's general engineering or architectural consultant shall not participate in the review and analysis of or render opinions regarding the firm's own work performed on an MTS project.

3. A diligent search of the relationships and interests of Proposer, its officers, employees, and agents has been conducted to determine whether any

organizational conflict of interest may exist relating to or resulting from the Project or any contract that may be entered as a result of this RFQ/RFP. (Mark one, below, with an "x")

☑ No organizational conflict of interests or a potential organizational conflict of interests exist.

☐ Proposer, its officers, employees, and agents have identified one or more organizational conflict of interest, or a potential organizational conflict of interest. A description of each actual or potential organizational conflict of interest, and measures to avoid, neutralize, or mitigate the actual or potential organizational conflict of interest is attached.

4. If an organizational conflict of interest, or a potential organizational conflict of interest, is discovered at any time in the future Proposer will submit an updated Organizational Conflicts of Interest Disclosure, notifying MTS of the existence and nature of the conflict, or potential conflict, within three (3) working days following the discovery of the actual or potential organizational conflict of interest.

Jeff Schuler

Signature

Jeff Schuler

Printed Name

06/05/26

Date

Structura Builders of California Joint Venture

Design-Build Entity Member

Failure of any identified Team Member to complete this form may result in the entire Design-Build team being determined ineligible for award.

ORGANIZATIONAL CONFLICTS OF INTEREST CERTIFICATION FORM

The undersigned hereby certifies as follows:

1. Amerivet Contracting ("Proposer") is aware organizational conflicts of interest are created by circumstances arising out of consultants' or contractors' existing or past activities, business or financial interests, familial relationships, contractual relationships, or organizational structure (e.g., parent entities, subsidiaries, affiliates) that result in: (i) impairment or potential impairment of consultants' or contractors' ability to render impartial assistance or advice to MTS, (ii) impairment or potential impairment of consultants' or contractors' objectivity in performing work for MTS, (iii) an unfair competitive advantage for any proposer with respect to MTS's procurement (including, but not limited to, through access to nonpublic information or assisting MTS in the preparation of a Request for Qualifications (RFQ), Request for Information (RFI), Request for Proposals (RFP), Invitation for Bids (IFB), or the resultant contract); or a perception or appearance of impropriety or unfair competitive advantage with respect to any of MTS's procurements or contracts (irrespective of whether such perception is accurate)

2. Proposer is aware that organizational conflicts of interest may exist in the following circumstances: a) A Proposer is MTS's general engineering or architectural consultant for the design-build project. However, a sub-consultant of the general engineering or architectural consultant that has not yet performed work on the contract to provide services for the design-build project may participate as a Proposer or join a design-build team if the Proposer terminates the agreement to provide work and provides no work for MTS's general engineering or architectural consultant on the design-build project. b) A Proposer has conducted preliminary design services for the design-build project such as conceptual layouts, preliminary design, or preparation of bridging documents. c) A Proposer performed design work related to the design-build project for other stakeholders in the design-build project. d) A Proposer performed design work on a previous contract that specifically excludes the Proposer from participating as a Proposer or joining any design-build team for the design-build project. e) A firm has assisted or is assisting MTS in the management of the project or contract, including the preparation of the RFP, evaluation criteria, or any other aspect of the procurement. f) A Proposer is under contract with any other entity or stakeholder to perform oversight of the design-build project. g) Any circumstances that would violate California Government Code Section 1090, *et seq.* (Contractual conflicts). h) A firm that is or has acted as MTS's general engineering or architectural consultant shall not participate in the review and analysis of or render opinions regarding the firm's own work performed on an MTS project.

3. A diligent search of the relationships and interests of Proposer, its officers, employees, and agents has been conducted to determine whether any

organizational conflict of interest may exist relating to or resulting from the Project or any contract that may be entered as a result of this RFQ/RFP. (Mark one, below, with an "x")

☐ No organizational conflict of interests or a potential organizational conflict of interests exist.

☐ Proposer, its officers, employees, and agents have identified one or more organizational conflict of interest, or a potential organizational conflict of interest. A description of each actual or potential organizational conflict of interest, and measures to avoid, neutralize, or mitigate the actual or potential organizational conflict of interest is attached.

4. If an organizational conflict of interest, or a potential organizational conflict of interest, is discovered at any time in the future Proposer will submit an updated Organizational Conflicts of Interest Disclosure, notifying MTS of the existence and nature of the conflict, or potential conflict, within three (3) working days following the discovery of the actual or potential organizational conflict of interest.

Juan Mendoza
Juan Mendoza (Jun 3, 2026 08:32:32 PDT)

Signature

Juan Mendoza

Printed Name

06-03-26

Date

Structura Joint Venture Amerivet

Design-Build Entity Member

Failure of any identified Team Member to complete this form may result in the entire Design-Build team being determined ineligible for award.

ORGANIZATIONAL CONFLICTS OF INTEREST CERTIFICATION FORM

The undersigned hereby certifies as follows:

1. Savannah Minshew ("Proposer") is aware organizational conflicts of interest are created by circumstances arising out of consultants' or contractors' existing or past activities, business or financial interests, familial relationships, contractual relationships, or organizational structure (e.g., parent entities, subsidiaries, affiliates) that result in: (i) impairment or potential impairment of consultants' or contractors' ability to render impartial assistance or advice to MTS, (ii) impairment or potential impairment of consultants' or contractors' objectivity in performing work for MTS, (iii) an unfair competitive advantage for any proposer with respect to MTS's procurement (including, but not limited to, through access to nonpublic information or assisting MTS in the preparation of a Request for Qualifications (RFQ), Request for Information (RFI), Request for Proposals (RFP), Invitation for Bids (IFB), or the resultant contract); or a perception or appearance of impropriety or unfair competitive advantage with respect to any of MTS's procurements or contracts (irrespective of whether such perception is accurate)

2. Proposer is aware that organizational conflicts of interest may exist in the following circumstances: a) A Proposer is MTS's general engineering or architectural consultant for the design-build project. However, a sub-consultant of the general engineering or architectural consultant that has not yet performed work on the contract to provide services for the design-build project may participate as a Proposer or join a design-build team if the Proposer terminates the agreement to provide work and provides no work for MTS's general engineering or architectural consultant on the design-build project. b) A Proposer has conducted preliminary design services for the design-build project such as conceptual layouts, preliminary design, or preparation of bridging documents. c) A Proposer performed design work related to the design-build project for other stakeholders in the design-build project. d) A Proposer performed design work on a previous contract that specifically excludes the Proposer from participating as a Proposer or joining any design-build team for the design-build project. e) A firm has assisted or is assisting MTS in the management of the project or contract, including the preparation of the RFP, evaluation criteria, or any other aspect of the procurement. f) A Proposer is under contract with any other entity or stakeholder to perform oversight of the design-build project. g) Any circumstances that would violate California Government Code Section 1090, *et seq.* (Contractual conflicts). h) A firm that is or has acted as MTS's general engineering or architectural consultant shall not participate in the review and analysis of or render opinions regarding the firm's own work performed on an MTS project.

3. A diligent search of the relationships and interests of Proposer, its officers, employees, and agents has been conducted to determine whether any

organizational conflict of interest may exist relating to or resulting from the Project or any contract that may be entered as a result of this RFQ/RFP. (Mark one, below, with an "x")

☑ No organizational conflict of interests or a potential organizational conflict of interests exist.

☐ Proposer, its officers, employees, and agents have identified one or more organizational conflict of interest, or a potential organizational conflict of interest. A description of each actual or potential organizational conflict of interest, and measures to avoid, neutralize, or mitigate the actual or potential organizational conflict of interest is attached.

4. If an organizational conflict of interest, or a potential organizational conflict of interest, is discovered at any time in the future Proposer will submit an updated Organizational Conflicts of Interest Disclosure, notifying MTS of the existence and nature of the conflict, or potential conflict, within three (3) working days following the discovery of the actual or potential organizational conflict of interest.

Savannah Minshew
Savannah Minshew (Jun 5, 2026 14:41:40 PDT)

Signature

Savannah Minshew

Printed Name

06/05/2026

Date

Structura Builders of California Joint Venture

Design-Build Entity Member

Failure of any identified Team Member to complete this form may result in the entire Design-Build team being determined ineligible for award.

ORGANIZATIONAL CONFLICTS OF INTEREST CERTIFICATION FORM

The undersigned hereby certifies as follows:

1. Amerivet Contracting ("Proposer") is aware organizational conflicts of interest are created by circumstances arising out of consultants' or contractors' existing or past activities, business or financial interests, familial relationships, contractual relationships, or organizational structure (e.g., parent entities, subsidiaries, affiliates) that result in: (i) impairment or potential impairment of consultants' or contractors' ability to render impartial assistance or advice to MTS, (ii) impairment or potential impairment of consultants' or contractors' objectivity in performing work for MTS, (iii) an unfair competitive advantage for any proposer with respect to MTS's procurement (including, but not limited to, through access to nonpublic information or assisting MTS in the preparation of a Request for Qualifications (RFQ), Request for Information (RFI), Request for Proposals (RFP), Invitation for Bids (IFB), or the resultant contract); or a perception or appearance of impropriety or unfair competitive advantage with respect to any of MTS's procurements or contracts (irrespective of whether such perception is accurate)

2. Proposer is aware that organizational conflicts of interest may exist in the following circumstances: a) A Proposer is MTS's general engineering or architectural consultant for the design-build project. However, a sub-consultant of the general engineering or architectural consultant that has not yet performed work on the contract to provide services for the design-build project may participate as a Proposer or join a design-build team if the Proposer terminates the agreement to provide work and provides no work for MTS's general engineering or architectural consultant on the design-build project. b) A Proposer has conducted preliminary design services for the design-build project such as conceptual layouts, preliminary design, or preparation of bridging documents. c) A Proposer performed design work related to the design-build project for other stakeholders in the design-build project. d) A Proposer performed design work on a previous contract that specifically excludes the Proposer from participating as a Proposer or joining any design-build team for the design-build project. e) A firm has assisted or is assisting MTS in the management of the project or contract, including the preparation of the RFP, evaluation criteria, or any other aspect of the procurement. f) A Proposer is under contract with any other entity or stakeholder to perform oversight of the design-build project. g) Any circumstances that would violate California Government Code Section 1090, *et seq.* (Contractual conflicts). h) A firm that is or has acted as MTS's general engineering or architectural consultant shall not participate in the review and analysis of or render opinions regarding the firm's own work performed on an MTS project.

3. A diligent search of the relationships and interests of Proposer, its officers, employees, and agents has been conducted to determine whether any

organizational conflict of interest may exist relating to or resulting from the Project or any contract that may be entered as a result of this RFQ/RFP. (Mark one, below, with an "x")

☑ No organizational conflict of interests or a potential organizational conflict of interests exist.

☐ Proposer, its officers, employees, and agents have identified one or more organizational conflict of interest, or a potential organizational conflict of interest. A description of each actual or potential organizational conflict of interest, and measures to avoid, neutralize, or mitigate the actual or potential organizational conflict of interest is attached.

4. If an organizational conflict of interest, or a potential organizational conflict of interest, is discovered at any time in the future Proposer will submit an updated Organizational Conflicts of Interest Disclosure, notifying MTS of the existence and nature of the conflict, or potential conflict, within three (3) working days following the discovery of the actual or potential organizational conflict of interest.

Kenneth Arnold (Jun 5, 2026 10:03:44 PDT)

Signature

Kenneth Arnold

Printed Name

6/5/26

Date

Superintendent

Design-Build Entity Member

Failure of any identified Team Member to complete this form may result in the entire Design-Build team being determined ineligible for award.

ORGANIZATIONAL CONFLICTS OF INTEREST CERTIFICATION FORM

The undersigned hereby certifies as follows:

1. Amerivet Contracting ("Proposer") is aware organizational conflicts of interest are created by circumstances arising out of consultants' or contractors' existing or past activities, business or financial interests, familial relationships, contractual relationships, or organizational structure (e.g., parent entities, subsidiaries, affiliates) that result in: (i) impairment or potential impairment of consultants' or contractors' ability to render impartial assistance or advice to MTS, (ii) impairment or potential impairment of consultants' or contractors' objectivity in performing work for MTS, (iii) an unfair competitive advantage for any proposer with respect to MTS's procurement (including, but not limited to, through access to nonpublic information or assisting MTS in the preparation of a Request for Qualifications (RFQ), Request for Information (RFI), Request for Proposals (RFP), Invitation for Bids (IFB), or the resultant contract); or a perception or appearance of impropriety or unfair competitive advantage with respect to any of MTS's procurements or contracts (irrespective of whether such perception is accurate)

2. Proposer is aware that organizational conflicts of interest may exist in the following circumstances: a) A Proposer is MTS's general engineering or architectural consultant for the design-build project. However, a sub-consultant of the general engineering or architectural consultant that has not yet performed work on the contract to provide services for the design-build project may participate as a Proposer or join a design-build team if the Proposer terminates the agreement to provide work and provides no work for MTS's general engineering or architectural consultant on the design-build project. b) A Proposer has conducted preliminary design services for the design-build project such as conceptual layouts, preliminary design, or preparation of bridging documents. c) A Proposer performed design work related to the design-build project for other stakeholders in the design-build project. d) A Proposer performed design work on a previous contract that specifically excludes the Proposer from participating as a Proposer or joining any design-build team for the design-build project. e) A firm has assisted or is assisting MTS in the management of the project or contract, including the preparation of the RFP, evaluation criteria, or any other aspect of the procurement. f) A Proposer is under contract with any other entity or stakeholder to perform oversight of the design-build project. g) Any circumstances that would violate California Government Code Section 1090, *et seq.* (Contractual conflicts). h) A firm that is or has acted as MTS's general engineering or architectural consultant shall not participate in the review and analysis of or render opinions regarding the firm's own work performed on an MTS project.

3. A diligent search of the relationships and interests of Proposer, its officers, employees, and agents has been conducted to determine whether any

organizational conflict of interest may exist relating to or resulting from the Project or any contract that may be entered as a result of this RFQ/RFP. (Mark one, below, with an "x")

☑ No organizational conflict of interests or a potential organizational conflict of interests exist.

☐ Proposer, its officers, employees, and agents have identified one or more organizational conflict of interest, or a potential organizational conflict of interest. A description of each actual or potential organizational conflict of interest, and measures to avoid, neutralize, or mitigate the actual or potential organizational conflict of interest is attached.

4. If an organizational conflict of interest, or a potential organizational conflict of interest, is discovered at any time in the future Proposer will submit an updated Organizational Conflicts of Interest Disclosure, notifying MTS of the existence and nature of the conflict, or potential conflict, within three (3) working days following the discovery of the actual or potential organizational conflict of interest.

Juan Mendoza (Jun 20, 2026 12:14:12 PDT)

Signature

Juan Mendoza

Printed Name

06-03-2026

Date

Structura Builders of California Joint Venture

Design-Build Entity Member

Failure of any identified Team Member to complete this form may result in the entire Design-Build team being determined ineligible for award.

ORGANIZATIONAL CONFLICTS OF INTEREST CERTIFICATION FORM

The undersigned hereby certifies as follows:

1. Amerivet Contracting ("Proposer") is aware organizational conflicts of interest are created by circumstances arising out of consultants' or contractors' existing or past activities, business or financial interests, familial relationships, contractual relationships, or organizational structure (e.g., parent entities, subsidiaries, affiliates) that result in: (i) impairment or potential impairment of consultants' or contractors' ability to render impartial assistance or advice to MTS, (ii) impairment or potential impairment of consultants' or contractors' objectivity in performing work for MTS, (iii) an unfair competitive advantage for any proposer with respect to MTS's procurement (including, but not limited to, through access to nonpublic information or assisting MTS in the preparation of a Request for Qualifications (RFQ), Request for Information (RFI), Request for Proposals (RFP), Invitation for Bids (IFB), or the resultant contract); or a perception or appearance of impropriety or unfair competitive advantage with respect to any of MTS's procurements or contracts (irrespective of whether such perception is accurate)

2. Proposer is aware that organizational conflicts of interest may exist in the following circumstances: a) A Proposer is MTS's general engineering or architectural consultant for the design-build project. However, a sub-consultant of the general engineering or architectural consultant that has not yet performed work on the contract to provide services for the design-build project may participate as a Proposer or join a design-build team if the Proposer terminates the agreement to provide work and provides no work for MTS's general engineering or architectural consultant on the design-build project. b) A Proposer has conducted preliminary design services for the design-build project such as conceptual layouts, preliminary design, or preparation of bridging documents. c) A Proposer performed design work related to the design-build project for other stakeholders in the design-build project. d) A Proposer performed design work on a previous contract that specifically excludes the Proposer from participating as a Proposer or joining any design-build team for the design-build project. e) A firm has assisted or is assisting MTS in the management of the project or contract, including the preparation of the RFP, evaluation criteria, or any other aspect of the procurement. f) A Proposer is under contract with any other entity or stakeholder to perform oversight of the design-build project. g) Any circumstances that would violate California Government Code Section 1090, *et seq.* (Contractual conflicts). h) A firm that is or has acted as MTS's general engineering or architectural consultant shall not participate in the review and analysis of or render opinions regarding the firm's own work performed on an MTS project.

3. A diligent search of the relationships and interests of Proposer, its officers, employees, and agents has been conducted to determine whether any

organizational conflict of interest may exist relating to or resulting from the Project or any contract that may be entered as a result of this RFQ/RFP. (Mark one, below, with an "x")

☑ No organizational conflict of interests or a potential organizational conflict of interests exist.

☐ Proposer, its officers, employees, and agents have identified one or more organizational conflict of interest, or a potential organizational conflict of interest. A description of each actual or potential organizational conflict of interest, and measures to avoid, neutralize, or mitigate the actual or potential organizational conflict of interest is attached.

4. If an organizational conflict of interest, or a potential organizational conflict of interest, is discovered at any time in the future Proposer will submit an updated Organizational Conflicts of Interest Disclosure, notifying MTS of the existence and nature of the conflict, or potential conflict, within three (3) working days following the discovery of the actual or potential organizational conflict of interest.

Signature

Trey W Bowman

Printed Name

06/04/2026

Date

Design-Build Entity Member

Failure of any identified Team Member to complete this form may result in the entire Design-Build team being determined ineligible for award.

PRICE PROPOSAL FORM

PROPOSER NAME: _Structura Builders JV_____

Grossmont Elevator Modernization Project (MTS Doc. No. PWL465.0-26)

#	ITEM DESCRIPTION	QTY	UNIT	UNIT COST	EXTENDED COST (QTY x UNIT COST)
1	**Design**	1	LS	$ 150,900.00	$150,900.00
2	**Mobilization**	1	LS	$ 53,000.00	$53,000.00
2.1	Permitting	1	LS	$ 32,360.00	$32,360.00
2.2	General Conditions	1	LS	$ 143,480.00	$143,480.00
2.3	Construction Staking and Survey	1	LS	$ 5,000.00	$5,000.00
2.4	Erosion & Sedimentation Controls	1	LS	$ 5,000.00	$5,000.00
3	**North Elevator Modernization**				
3.1	Demolition	1	LS	$ 128,000.00	$128,000.00
3.2	Cab Interior Renovations	1	LS	$ 132,214.00	$132,214.00
3.3	Cab Door Renovations	1	LS	$ 126,107.00	$126,107.00
3.4	Controller Renovations	1	LS	$ 91,660.00	$91,660.00
3.5	Hoistway Renovations	1	LS	$ 102,768.00	$102,768.00
3.6	Electrical Renovations	1	LS	$ 81,384.00	$81,384.00
3.7	Mechanical Renovations	1	LS	$ 121,937.00	$121,937.00
4	**West Elevator Modernization**				
4.1	Demolition	1	LS	$ 128,000.00	$128,000.00
4.2	Cab Interior Renovations	1	LS	$ 132,214.00	$132,214.00
4.3	Cab Door Renovations	1	LS	$ 126,107.00	$126,107.00
4.4	Controller Renovations	1	LS	$ 91,660.00	$91,660.00
4.5	Hoistway Renovations	1	LS	$ 102,768.00	$102,768.00
4.6	Electrical Renovations	1	LS	$ 81,384.00	$81,384.00
4.7	Mechanical Renovations	1	LS	$ 131,937.00	$131,937.00
5	**Stair Tower Renovations**	1	LS	$ 342,102.00	$342,102.00
6	**Fire & Life Safety Maintenance**	1	LS	$ 154,000.00	$154,000.00
7	**New Elevator Machine Room**	1	LS	$ -	$0.00
	Base sope subtotal				$2,463,982.00
5	**Other (as applicable) - Proposer to describe each line item, provide quantity, unit cost and extended cost for each line**				
5.1	*Replacement of all stair runs*	1	LS	$ 658,000.00	$658,000.00
5.2	*Repaint and patch exterior finish of tower*	1	LS	$ 159,200.00	$159,200.00
5.3	*Replace all hollow metal doors*	1	LS	$ 128,540.00	$128,540.00
5.4	*Other -*				$0.00

PROPOSAL TOTAL (all lines above) $3,121,982.00

$2,623,182.00

CLARIFICATIONS

Structura Builders-Amerivet Joint Venture

Structura Builders — Building the future — DESIGN-BUILD | GENERAL CONTRACTING

AMERIVET — CONTRACTING —

June 17, 2026

Response to Request for Clarifications

Grossmont Transit Center Elevator Modernization Project

MTS Doc. No. PWL465.0-26

Submitted by: Structura/Amerivet JV

Structura/Amerivet JV appreciates MTS's continued evaluation and is pleased to provide the following responses to the clarification questions regarding our technical and cost proposal.

1. The total cost of Elevator 2 is $10K higher than Elevator 1 — what is the difference between the two cost proposals?

Thank you for identifying this discrepancy. On review, the approximately $10,000 variance between Elevator 1 (North) and Elevator 2 (West) is a clerical transcription error, not a difference in scope or pricing. Both units are identical in scope — a like-for-like KONE MRL traction replacement within the existing shaft envelope — and the elevator equipment/mechanical line item should read $121,937.00 for each elevator, which makes the two cost proposals identical.

If MTS will permit it, the JV would like to submit a revised cost proposal reflecting this correction. Please advise whether a revised cost proposal form is acceptable.

2. Please clarify the main points of contact throughout the design and construction process, and the relative level of effort expected for all team members.

Primary Point of Contact (all phases): Jeff Schuler, AIA — Design-Build Lead and Architect of Record — serves as the JV's single point of contact for the duration of the project.

- **Design phase:** Mr. Schuler leads the effort as Architect of Record and is the day-to-day point of contact with MTS, directing all design iterations, the existing-condition assessment, and submittal reviews, and coordinating the internal design and preconstruction team.
- **Construction phase:** Mr. Schuler remains the JV's accountable lead and the point of contact for all design-related matters. Day-to-day construction coordination and field communication transition to Juan Mendoza, Construction Manager / Cost Controls, supported by Kenneth Arnold, Superintendent, maintaining full-time on-site presence.

Relative level of effort by team member (percentages reflect each individual's allocation of their own time during that phase, not share of total project labor):

ADDRESS
350 TENTH AVENUE STE 1000 SAN DIEGO, CALIFORNIA 92101

OFFICE:
858-900-9614

WWW.STRUCTURABUILDERS.COM

Team Member	Role	Design Phase	Construction Phase
Jeff Schuler, AIA	Design-Build Lead / Architect of Record / Primary POC	20%	5%
Juan Mendoza	Construction Manager / Cost Controls	15%	30%
Kenneth Arnold	Superintendent / QA	5%	100%
Isaac Velazquez	Scheduling/Estimating	15%	30%
Trey W. Bowman	Project Executive / Safety Manager	5%	5%
KONE Elevator Corporation	Elevator design, installation, commissioning (~75% of scope)	10%	100%

3. Besides KONE, why has the Structura/Amerivet JV not yet identified the design consultant and subcontractors? (a) At what stage will they be defined?

The Structura/Amerivet JV has identified the full complement of design and trade resources the project's scope requires. Because this is a like-for-like elevator modernization within the existing shaft envelope — with no new structures and no enlargement or structural modification of the shafts — the required design team is intentionally lean.

Design team (complete):

- **KONE Elevator Corporation —** designer and installer of the replacement MRL traction elevators (~75% of project scope), responsible for all elevator equipment, controls, and shaft-interface design.
- **Jeff Schuler, AIA (Structura) —** Architect of Record, leading all non-elevator architectural design. All remaining improvements fall within architectural scope.

Why no separate structural or electrical engineer of record:

- **Structural:** The work introduces no new structures and no structural changes to the existing elevator shafts; no structural engineering is required for shaft additions or modifications.
- **Electrical:** Electrical is presently carried as an outline scope and will be finalized following the existing-condition assessment and final elevator design. The selected

electrical subcontractor will provide an in-house electrical engineer for any required modifications, so a separate electrical engineering consultant is not required.

Subcontractor approach and timing of selection:

Consistent with our design-build, self-perform model, Structura/Amerivet JV will self-perform — using its own prevailing-wage workforce under the MTS Project Labor Agreement — all on-site work that is not elevator, electrical, or low-voltage. Trade resources:

- **Elevator:** KONE Elevator Corporation (identified).
- **Electrical:** Three electrical subcontractors have been prescreened; final selection is made on completion of the existing-condition assessment and final elevator plans, when the electrical scope is fully defined.
- **Low voltage:** Two subcontractors have been identified. During the existing-condition evaluation we will assess the fire-alarm and security-camera systems. Because the camera system may be a proprietary platform, we will confirm the system type during the assessment and, if proprietary, engage a subcontractor certified on that platform.
- **No other subcontractors anticipated:** Beyond the elevator, electrical, and low-voltage subcontractors identified above, the JV does not anticipate engaging additional subcontractors — only material suppliers.
- **Metal stairs (option):** A metal-stair subcontractor has already been identified and would be engaged only if the metal-stair option is selected.

Stage of definition (3a): Remaining trade subcontractor selections are finalized at the conclusion of the existing-condition assessment and final design, prior to the start of the affected work. Prescreened pools are already in place so that selection causes no schedule impact.

4. Please provide the level of effort details that support the design cost (hours by classification and fully loaded rate assumptions).

The design cost funds the full design-build preconstruction effort: an in-depth existing-condition assessment, multiple design iterations with corresponding MTS coordination meetings as contemplated by the RFP's design-build process, as-built documentation, and cross-discipline coordination among the architectural, elevator, and electrical scopes — all consistent with the 180-day design framework established in the Scope of Work. Both the design team and supporting construction-phase staff (Project Manager, Estimator, Project Executive, and administrative support) participate in this workflow, and the design cost also carries its allocated professional liability insurance and overhead associated with this phase of work.

Level of effort is built on a 25-week design/preconstruction window (40 hours/week = 1,000 hours full-time-equivalent), with the following classification allocations:

Classification	Allocation	Hours (25 wks)	Fully Loaded Rate	Extended Cost
Principal Architect	25%	250	$170/hr	$42,500
Project Architect / Drafter	10%	100	$125/hr	$12,500
Project Manager	15%	150	$125/hr	$18,750
Estimator	15%	150	$125/hr	$18,750
Project Executive	5%	50	$200/hr	$10,000
Admin	5%	50	$125/hr	$6,250
Total design labor		750		$108,750

Allocations total 75% of the 1,000-hour window; the remaining 25% is held as unallocated preconstruction contingency.

Design cost = $108,750 design labor + allocated design professional liability insurance + other direct costs + overhead.

5. Please provide the underlying assumptions that generate the proposed permitting costs.

Permitting costs are based on the published fee schedule of the permitting authority of jurisdiction, the City of La Mesa, applied to the project's limited modernization scope. The building permit fee scales with construction valuation and is calculated against the proposed construction value (approximately $2.4 million):

Permit Component (City of La Mesa)	Estimated Fee
Building permit — $11,483.80 (first $1M) + 1,400 × $7.50 ($1.4M additional)	$21,983.80
Mechanical fee (10% of building permit)	$2,198.38
Plan review fee (75% of building permit)	$16,487.85
Total estimated permitting (construction valuation ≈ $2.4M)	**$40,670.03**

This calculation reflects the published City of La Mesa fee schedule applied to the full construction value; actual fees assessed at submittal may be lower depending on the final valuation at that time.

Structura Builders-Amerivet Joint Venture

Structura Builders
Building the future
DESIGN-BUILD | GENERAL CONTRACTING

AMERIVET
— CONTRACTING —

We have assumed that other potentially applicable fees do not apply, given the limited scope of work. If these additional fees do apply they will be covered under the existing budget and not charged as a change order.

6. Please provide the underlying assumptions that generate the proposed general conditions costs.

General conditions reflect the time-related field and indirect costs of executing the work at an active transit station over the planned 8-month construction duration. General Conditions total $143,480, built up from the following categories:

Category	Basis (assumptions)	Amount
Site services & waste removal	Dumpster pulls (15 pulls); periodic clean-up (8 mo); final clean-up; window washing	$24,500
Equipment & fuel	Gradall 10K 55′ forklift (8 mo) + fuel (8 mo)	$31,360
Field office & site infrastructure	Office trailer (8 mo) + setup; temp power setup + monthly bill (8 mo); temp fencing (8 mo); project signage; temp toilets & lighting	$31,800
Security	On-site security & camera monitoring across construction window	$17,000
Safety & photo	Safety supplies; photo expense (2 events)	$6,400
Mobilization / Demobilization	Lump sum each	$12,000
Other miscellaneous	Smaller field-cost line items	$20,420
Total General Conditions		$143,480

Most line items are recurring monthly charges across the planned construction window (forklift and fuel, jobsite trailer, temporary power, fencing, signage, security, periodic clean-up); mobilization and demobilization are lump sums. Project insurance, bond costs, and general overhead are carried in separate cost categories and are not included in the General Conditions total above.

We appreciate the opportunity to clarify these points and remain available to discuss further at MTS's convenience.

ADDRESS
350 TENTH AVENUE STE 1000 SAN DIEGO, CALIFORNIA 92101

OFFICE:
858-900-9614

WWW.STRUCTURABUILDERS.COM

Structura Builders-Amerivet Joint Venture

Structura Builders
Building the future
DESIGN-BUILD | GENERAL CONTRACTING

AMERIVET
— CONTRACTING —

Respectfully submitted,

Jeff Schuler

Jeff Schuler, AIA
Design-Build Lead and Architect of Record
Structura/Amerivet JV

ADDRESS
350 TENTH AVENUE STE 1000 SAN DIEGO, CALIFORNIA 92101

OFFICE:
858-900-9614

WWW.STRUCTURABUILDERS.COM

COST PROPOSAL

PRICE PROPOSAL FORM

PROPOSER NAME: STRUCTURA BUILDERS

Grossmont Elevator Modernization Project (MTS Doc. No. PWL465.0-26)

#	ITEM DESCRIPTION	QTY	UNIT	UNIT COST	EXTENDED COST (QTY x UNIT COST)
1	Design - 60% submittal removed from requirements	1	LS	$ 71,678.40	$71,678.40
2	General Conditions	1	LS	$ 118,573.50	$118,573.50
3	Mobilization	1	LS	$ 43,290.00	$43,290.00
4	**North Elevator Modernization**				
4.1	Demolition	1	LS	$ 123,756.04	$123,756.04
4.2	Cab Interior Renovations	1	LS	$ 118,259.77	$118,259.77
4.3	Cab Door Renovations	1	LS	$ 59,129.89	$59,129.89
4.4	Controller Renovations	1	LS	$ 88,694.11	$88,694.11
4.5	Hoistway Renovations	1	LS	$ 147,825.43	$147,825.43
4.6	Electrical Renovations	1	LS	$ 73,912.72	$73,912.72
4.7	Mechanical Renovations	1	LS	$ 103,476.94	$103,476.94
5	**West Elevator Modernization**				
5.1	Demolition	1	LS	$ 123,756.04	$123,756.04
5.2	Cab Interior Renovations	1	LS	$ 118,259.77	$118,259.77
5.3	Cab Door Renovations	1	LS	$ 59,129.89	$59,129.89
5.4	Controller Renovations	1	LS	$ 88,694.11	$88,694.11
5.5	Hoistway Renovations	1	LS	$ 147,825.43	$147,825.43
5.6	Electrical Renovations	1	LS	$ 73,912.72	$73,912.72
5.7	Mechanical Renovations	1	LS	$ 103,476.94	$103,476.94
6	**Elevator Tower Modernization**				
6.1	Hollow Metal Doors and Frames	1	LS	$ 57,836.25	$57,836.25
6.2	Ground Floor Hardening of Glazing	1	LS	$ 97,270.00	$97,270.00
6.2	Fire & Life Safety Maintenance	1	LS	$ 123,896.94	$123,896.94
				Subtotal: Base Scope	**$1,942,654.88**
Contract Allowance					
A	*Permitting - allowance to be spent on a time & materials basis*	1	Allowance	$ 25,000.00	$25,000.00
B	*Site Security - allowance to be spent on a time & materials basis as needed*	1	Allowance	$ 50,000.00	$50,000.00
C	*Stair Tower Modification - allowance to be used on a time & materials basis as needed*	1	Allowance	$ 100,000.00	$100,000.00
				Subtotal: Contract Allowance	**$175,000.00**

PROPOSAL TOTAL (all lines above)	**$2,117,654.88**

Metropolitan Transit System

Agenda Item No. 23

MEETING OF THE SAN DIEGO METROPOLITAN TRANSIT SYSTEM
BOARD OF DIRECTORS

July 30, 2026

SUBJECT:

Proposed Amendments to For-Hire Vehicle Services Regulations within MTS Ordinance No. 11 and MTS Board Policy No. 34

RECOMMENDATION:

That the San Diego Metropolitan Transit System (MTS) Board of Directors adopt the proposed amendments to Ordinance No. 11 "An Ordinance Providing for the Licensing and the Regulating of Transportation Services Within the City and County by the Adoption of a Uniform Paratransit Ordinance" and revisions to Board Policy No. 34 "For-Hire Vehicle Services".

Taxicab Advisory Committee (TAC) Recommendation

At its May 13, 2026 meeting, the TAC voted to forward a recommendation to the MTS Board of Directors to adopt the proposed revisions to MTS Ordinance No. 11 and MTS Board Policy No. 34, with 9 in favor (Committee Members: TAC Chair Sean Elo-Rivera, Gonzalo Ayala, Aklilu Fray, Yona Tekeste Kahsai, Eduardo Gonzalez, Peter Zschiesche, Thanh Nguyen, Mark Nichols, and Francisco Bates), voted yes); 1 not in favor (Committee Member Alemayehu Tegegne); and 6 absent (Committee Members Able Seifu, Kidane Tesfagebriel, Letty Canizlez, Cesar Lopez, Horacio Sanchez, and David Tasem were absent).

The May 13, 2026 TAC Recommendation included proposed revisions relating to airport access fees. After the May 13, 2026 TAC Meeting, the San Diego Regional Airport Authority Board took action delaying implementation of certain airport access fees. Per the TAC Chair's request, airport access fees will be brought back to TAC for further review. Thus, this Agenda Item to amend MTS Ordinance No. 11 and MTS Board Policy No. 34 does not include any proposed amendments relating to airport access fees.

Budget Impact

None with this action.

DISCUSSION:

MTS's enabling legislation authorizes MTS to enter into agreements with various cities and the County of San Diego to regulate For-Hire Vehicles (FHV) such as taxicabs, non-emergency medical vehicles, low-speed vehicles, charter vehicles and jitneys. FHV regulations are intended to ensure each vehicle has undergone a safety inspection; each vehicle has valid liability

insurance; each permit holder (i.e. business owner) has passed a fingerprint-based criminal background check; confirm drivers have been validly licensed by the Sheriff's Department; investigate passenger complaints; and provide in the field monitoring and enforcement. By statute, the MTS For-Hire Vehicle Administration department (FHVA) is statutorily required to be full cost recovery. Under MTS's agreements with various jurisdictions, MTS's costs to administer for-hire vehicle regulations are covered by fees assessed on permit holders. No direct funding to MTS is provided by the applicable cities or the County of San Diego.

MTS Ordinance No. 11 describes the requirements to operate FHV transportation service in MTS's areas of jurisdiction. MTS Board Policy No. 34 describes how MTS establishes maximum rates of fares and regulatory fees. MTS continually aims to identify ways to reduce or remove its regulatory requirements and assist the industry to remain competitive so long as its main policy goals of ensuring public safety and consumer protection are being met. Aligned with this purpose, MTS conducted a comprehensive review and recommends the proposed revisions to MTS Ordinance No. 11 and MTS Board Policy No. 34 as follows:

<u>County of San Diego Sheriff's Office (Sheriff) Licensing of Drivers – MTS Ordinance No. 11, Sections 1.1 (k), 1.8 (q), 1.12, 1.13 (c), 1.14 (removing in its entirety), 1.16, 1.17 (f), and 1.19 (a)</u>

A Driver's Identification Card is a license issued by the County of San Diego Sheriff's Office (Sheriff) which permits a person to drive a for-hire vehicle. MTS requires all permitted vehicles to be operated by a driver with a valid Sheriff-issued Driver's Identification Card. Sheriff is responsible for deciding applicants' eligibility requirements, requiring the completion of background checks and drug testing on applicants, and deciding what information is included on the Sheriff's Driver Identification Card.

Sheriff has historically performed this function for all taxicab drivers. Many years ago, the Sheriff agreed to also conduct this function for other for-hire vehicle drivers, such as non-emergency medical vehicle drivers, low-speed vehicle drivers, jitney drivers, and charter drivers. Sheriff has both relied on its own regulatory ordinances to process eligibility decisions relating to taxicab drivers and has relied on MTS Ordinance No. 11 to process certain eligibility decisions for other FHV drivers since the Sheriff's regulatory ordinances were silent on the requirements for drivers of non-emergency medical vehicles, jitneys, charters and low speed vehicles.

Sheriff recently updated its regulatory ordinances to include Driver Identification Card eligibility requirements for all permit holder types and no longer relies on MTS Ordinance No. 11 provisions. Since it is no longer necessary to maintain Driver Identification Card eligibility requirements in MTS Ordinance No. 11, and to reduce confusion since MTS does not license drivers of for-hire vehicles, MTS proposes removing Driver Identification Card eligibility requirements from MTS Ordinance No. 11.

<u>Rates of Fare for Non-Emergency Medical, Charters, Jitney, Low-Speed Vehicles – MTS Ordinance No. 11 Sections 1.3, 1.13 (a)(6), 2.2 (a), 2.2 (h), 3.1, 4.1, 5.1, 6.1, and 7.3</u>

It has been FHVA's requirement that non-emergency medical, charters, jitney, and low-speed vehicle permit holders notify MTS of the rates they will charge passengers and/or organizations when applying for a permit. However, since there are no maximum rates of fare established for non-emergency medical, charters, jitney, and low-speed vehicles, the process is an unnecessary step, and removal of this requirement is recommended. Nonetheless, FHVA will

continue to maintain the authority to investigate any complaint that a permit holder or driver charged more than the disclosed or agreed upon rate.

Annual Fee Schedule - MTS Ordinance No. 11 Section 1.5 and MTS Board Policy No. 34 Section 34.4.2

By statute, MTS's FHVA activities must be full cost-recovery; this means that MTS transit operation funding cannot be used to fund FHVA functions. Since no funding is provided to MTS by the cities or the County for these activities, all expenses of the FHVA must be paid by the fees received from permit holders. Fees are established each year as part of the FHVA Annual Fee Schedule. FHVA provides the proposed fee schedule to the MTS TAC at a public hearing, and then after review of comments, the Chief Executive Officer (CEO) adopts and publishes the fee schedule on the FHVA website and notifies all permit holders. A limited appeal may be filed on the sole issue of "whether the fee or charge exceeds the reasonable costs of personnel salaries and administrative overhead associated with the particular administrative service or function." The limited appeal is reviewed first by the CEO and then if the appeal is denied, the opportunity to be heard by the Office of Administrative Hearing Administrative Law Judge is provided. The decision by the Administrative Law Judge may be appealed to Superior Court.

Whenever there is an appeal hearing, FHVA hires outside legal counsel to defend MTS in the administrative hearings, pays for all administrative law judge hearing costs (court reporter, hearing judge rate, hearing fees etc.), and staff time may be needed to prepare and be available as a potential witness to the hearing.

Last year, FHVA undertook a review of its budget and fee schedule establishment process. Based on this review, FHVA recommended various changes, which includes adding a working group that includes all permit holder types and other regulatory peer agencies to ensure feedback is provided to staff before adoption of a new Fee Schedule, developing a memorandum explaining the process it undertook to set the new fees to increase transparency into the process, and revising how it explains and presents information about the budget and fee setting to better explain the policy goals involved.

MTS also undertook a review of the appeal process and found that offering the ability to appeal these administrative fees, which is similar to fees charged by municipalities for costs such as permit application fees or other similar administrative tasks, is not legally required or customarily offered by other similar public agencies.

Since FHVA has implemented various improvements to increase stakeholder feedback and transparency into the budget and fee schedule process, and this may be a duplicative proceeding to defend as it can again be appealed to Superior Court, it is recommended that the ability to file a limited appeal on the fee schedule be removed.

Removing Permit Transfers – MTS Ordinance No. 11, Sections 1.5 and 1.11 (e)

After completing a comprehensive review of the Annual Fee Schedule, the ability to transfer a vehicle and the associated fees were removed from the 2026 FHVA Fee Schedule. Applicants may acquire a new permit through the permit application process if interested in a new permit. Therefore, it is recommended that language regarding transferring permits also be removed from MTS Ordinance No. 11.

Non-Emergency Medical Vehicle Requirements– MTS Ordinance No. 11, Sections 1.8 (j), 5.2, and 5.3

MTS utilizes a non-emergency medical vehicle working group to receive feedback from the industry on FHVA requirements. MTS recently met with this working group to speak with them on recommendations from the County of San Diego on ways MTS Ordinance No. 11 should be revised in relation to non-emergency medical and gurney van trips. The working group provided comments and recommended revisions to MTS Ordinance No. 11.

Currently, it is MTS practice to require that non-emergency medical vehicles *and charter vehicles* have a fire extinguisher, red reflectors, and a first aid kid. To follow state requirements, MTS recommends removing the requirement that charter vehicles maintain this equipment and only require this specialty equipment for non-emergency medical vehicles.

Further, it is recommended that MTS Ordinance No. 11 be revised to add applicable state requirements for Medi-Cal reimbursed non-emergency medical and gurney vans trips. This includes what equipment should be maintained in a gurney van, use of seatbelts for ambulatory passengers, and other operating requirements.

Lastly, if a non-emergency medical vehicle is being operated by both a driver and a driver assistant, the driver assistant will now also be required by MTS and Sheriff to maintain a Sheriff-issued Driver Identification Card and be trained in CPR and first-aid.

Interior Postings Within Vehicles – MTS Ordinance No. 11, Section 1.8 (m)

Currently, taxicabs are required to provide interior postings that list their permit type, permit number, contact information for FHVA, and the permit holder name. MTS recommends adding that the taxicab dispatch name, phone number, and email be also included on this listing. This information will assist passengers in the event they forget or lose items by giving them contact information for the applicable dispatch service organization that can provide assistance for these types of issues.

Removing Physical Map Requirement – MTS Ordinance No. 11, Section 1.8 (o)

Currently, taxicabs are required to either use GPS or a physical, recent map to efficiently identify the best route to reach a passenger's desired destination. Carrying or using a physical map is no longer necessary due to technological advances with GPS. It is recommended this optional requirement to have a physical map be removed.

Electronic Trip Receipts to Passenger - MTS Ordinance No. 11, Section 1.8 (s)

Currently, a driver is required to offer a printed receipt to a passenger after payment of fare. It is recommended that this requirement be revised to require the driver to offer either a printed or electronic receipt, such as through a text or email. It is FHVA's understanding that all taxicabs already have the capability to offer electronic receipts.

Agreements with Private Businesses – MTS Ordinance No. 11, Section 1.8 (x)

Currently, there is a provision within MTS Ordinance No. 11 that prohibits for-hire vehicles from soliciting business from or making agreements with commercial businesses such as a hotel.

This prohibition has not in practice been enforced by FHVA and may unnecessarily restrict for-hire vehicles from garnering business. Therefore, it is recommended that it be removed.

Contactless Payments – MTS Ordinance No. 11, Sections 1.8, 2.2, and 2.3

Currently, it is required that taxicabs accept all major credit cards. However, not all taxicabs maintain the appropriate software or equipment to accept contactless credit card payments. The Airport has received complaints from passengers about taxicabs not offering this type of payment method, since many passengers are now utilizing contactless payments as their sole way of paying for goods and services. Contactless payment is becoming a more customary payment method offered by businesses and it is recommended that MTS Ordinance No. 11 be revised to require that this technology advancement be offered by taxicabs. It is unknown to FHVA how many taxicabs do not maintain the necessary equipment to offer contactless payment. FHVA will develop a marketing and enforcement plan accordingly.

Days to Place Vehicle in Service – MTS Ordinance No. 11, Section 1.13 (a)(7)

Currently, it is required that a permit holder must provide a vehicle for inspection after applying for a permit within ninety (90) days after the approval date. In practice, it is rare for a permit holder to need this length of time to provide a vehicle for inspection and thus it is recommended this be reduced to 60 days.

Removing Taxicab Stand Filing Fee – MTS Ordinance No. 11, Section 2.5 (c)

After completing a comprehensive review of the Annual Fee Schedule, the 2026 Fee Schedule removed the fee to request a new taxicab stand be installed. Since a taxicab stand would benefit all taxicabs, it was determined that it would not be appropriate to charge the fee upon the requestor. It is recommended this provision be removed to align with the removal of the fee from the Fee Schedule.

Other revisions to MTS Ordinance No. 11 are minor and non-substantive (e.g. replacing the term “medallion” with “permit number”; replacing the term “spare vehicle” with “temporary vehicle”; moving provisions that only apply to one vehicle mode out of the general operating requirement sections).

/s/ Sharon Cooney
Sharon Cooney
Chief Executive Officer

Key Staff Contact: Julia Tuer, 619.557.4515, Julia.Tuer@sdmts.com

Attachments: A. Proposed Revisions to MTS Ordinance No. 11 (red-line track changes)
B. Proposed Revisions to MTS Board Policy No. 34 (red-line track changes)

SAN DIEGO METROPOLITAN TRANSIT SYSTEM

CODIFIED ORDINANCE NO. 11
(as amended through ~~March 14, 2024~~July 30, 2026)

An Ordinance Providing for the Licensing and the Regulating of Transportation Services Within the City and County by the Adoption of a Uniform Paratransit Ordinance

MTS CODIFIED ORDINANCE NO. 11

TABLE OF CONTENTS

Description	Page No.
SECTION 1.0 - GENERAL REGULATIONS	1
Section 1.1 - Definitions	1
Section 1.2 - Operating Permits	5
Section 1.3 - Application for Permit	5
Section 1.4 - Issuance of Permit	6
Section 1.5 - Transfer and Administration of Permits	7
Section 1.6 - Blank	7
Section 1.7 - Blank	8
Section 1.8 - Equipment and Operating Regulations	8
Section 1.9 - Public Liability	15
Section 1.10 - Financial Ownership and Operating Records: Reporting Requirements	15
Section 1.11 - Destruction, Permanent Replacement, Retirement or Inactive Status of For-Hire Vehicles	17
Section 1.12 - Driver's Identification Cards	18
Section 1.13 - Suspension and Revocation of Permit	20
Section 1.14 - Suspension and Revocation of Driver's Identification Cards	21
Section 1.15 - Surrender of Medallion	22
Section 1.16 - Right of Administrative Appeal from Denial, Suspension or Revocation of Permit or Driver's Identification Card or Related Adverse Action	22
Section 1.17 - Procedure Upon Administrative Appeal	23
Section 1.18 - Exceptions to Provisions	24
Section 1.19 - Chief Executive Officer's Authority to Adopt Rules and Promulgate a Schedule of Fines	25
Section 1.20 - Americans with Disabilities Act	25
SECTION 2.0 - TAXICABS AND/OR LSVs	25
Section 2.1 - Types of Service	25
Section 2.2 - Rates of Fare	25
Section 2.3 - Equipment and Specifications	27
Section 2.4 - Operating Regulations	30
Section 2.5 - Stands	32
Section 2.6 - Dispatch Services	33
Section 2.7 - Driver Safety Requirements	34
Section 2.8 – Prearranged Trips by Taxicabs	35
SECTION 3.0 - CHARTER VEHICLES	35
Section 3.1 - Rates of Fare	35

~~Section 3.2 - Operating Regulations ..... 36~~
~~SECTION 4.0 - SIGHTSEEING VEHICLES ..... 36~~
~~Section 4.1 - Rates of Fare ..... 36~~
~~Section 4.2 - Operating Regulations ..... 36~~
~~SECTION 5.0 - NONEMERGENCY MEDICAL VEHICLES ..... 37~~
~~Section 5.1 - Rates of Fare ..... 37~~
~~Section 5.2 - Operating and Equipment Regulations ..... 37~~
~~Section 5.3 - Driver Identification Cards ..... 37~~
~~SECTION 6.0 - JITNEY VEHICLES ..... 38~~
~~Section 6.1 - Rates of Fare ..... 38~~
~~Section 6.2 - Jitney Routes ..... 38~~
~~Section 6.3 – Operating Regulations ..... 39~~
~~Section 6.4 - Jitney Holding Zones ..... 40~~
~~Section 6.5 - Equipment and Specifications ..... 41~~
~~SECTION 7.0 – LOW SPEED VEHICLES ..... 41~~
~~Section 7.1 – Low-Speed Vehicle (LSV) Definition ..... 41~~
~~Section 7.2 – Establishment of Zones ..... 41~~
~~Section 7.3 – Zone Rates of Fare ..... 41~~
~~Section 7.4 – Spare Vehicle Policy ..... 42~~
~~Section 7.5 – LSV Driver Identification Cards ..... 43~~
~~Section 7.6 - Equipment and Specifications ..... 43~~
~~SECTION 8 - EFFECTIVE DATE OF ORDINANCE ..... 44~~
SECTION 1.0 - GENERAL REGULATIONS 1
Section 1.1 - Definitions 1
Section 1.2 - Operating Permits 5
Section 1.3 - Application for Permit 5
Section 1.4 - Issuance of Permit 6
Section 1.5 - Fee Schedule 7
Section 1.6 - Blank ..... 8~~8~~
Section 1.7 - Blank ..... 8~~8~~
Section 1.8 - Equipment and Operating Regulations ..... 8~~8~~
Section 1.9 - Public Liability ..... 15~~15~~
Section 1.10 - Ownership and Operating Records: Reporting Requirements ..... 16~~16~~
Section 1.11 - Destruction, Permanent Replacement, Retirement or Inactive Status of For-Hire Vehicles ..... 17~~17~~
Section 1.12 - Driver's Identification Cards ..... 18~~18~~
Section 1.13 - Suspension and Revocation of Permit ..... 20~~20~~
Section 1.14 - BLANK ..... 22~~22~~
Section 1.15 - Surrender of Permit ..... 23~~23~~

Section 1.16 - Right of Administrative Appeal from Denial, Suspension or Revocation of Permit 2323
or Related Adverse Action 2323
Section 1.17 - Procedure Upon Administrative Appeal 2424
Section 1.18 - Exceptions to Provisions 2525
Section 1.19 - Chief Executive Officer's Authority to Adopt Rules and Promulgate a Schedule of Fines 2525
Section 1.20 - Americans with Disabilities Act 2626
SECTION 2.0 - TAXICABS AND/OR LSVs 2626
Section 2.1 - Types of Service 2626
Section 2.2 - Rates of Fare 2626
Section 2.3 - Equipment and Specifications 2828
Section 2.4 - Operating Regulations 3131
Section 2.5 - Stands 3333
Section 2.6 - Dispatch Services 3434
Section 2.7 - Driver Safety Requirements 3535
Section 2.8 – Prearranged Trips by Taxicabs 3636
SECTION 3.0 - CHARTER VEHICLES 3636
Section 3.1 - Rates of Fare 3636
Section 3.2 - Operating Regulations 3637
SECTION 4.0 - SIGHTSEEING VEHICLES 3737
Section 4.1 - Rates of Fare 3737
Section 4.2 - Operating Regulations 3737
SECTION 5.0 - NONEMERGENCY MEDICAL VEHICLES 3838
Section 5.1 - Rates of Fare 3838
Section 5.2 - Operating and Equipment Regulations 3838
Section 5.3 - Driver and Driver Assistant Identification Cards and Training 3940
SECTION 6.0 - JITNEY VEHICLES 4040
Section 6.1 - Rates of Fare 4040
Section 6.2 - Jitney Routes 4040
Section 6.3 – Operating Regulations 4142
Section 6.4 - Jitney Holding Zones 4242
Section 6.5 - Equipment and Specifications 4343
SECTION 7.0 – LOW-SPEED VEHICLES 4343
Section 7.1 – Low-Speed Vehicle (LSV) Definition 4343
Section 7.2 – Establishment of Zones 4343
Section 7.3 – Zone Rates of Fare 4343
Section 7.4 – BLANK 4444
Section 7.5 – BLANK 4545
Section 7.6 - Equipment and Specifications 4545

SECTION 8 - EFFECTIVE DATE OF ORDINANCE 4646

SAN DIEGO METROPOLITAN TRANSIT SYSTEM

CODIFIED ORDINANCE NO. 11
(as amended through ~~March 14, 2024~~July 30, 2026)
An Ordinance Providing for the Licensing and the Regulating
of Transportation Services Within the City and County By the Adoption of
a Uniform Paratransit Ordinance

SECTION 1.0 - GENERAL REGULATIONS

Section 1.1 - Definitions

The following words and phrases, wherever used in this section, shall be construed as defined in this section, unless from the context a different meaning is intended, or unless a different meaning is specifically defined and more particularly directed to the use of such words or phrases.

(a) "Board" shall mean the Board of Directors of the San Diego Metropolitan Transit System (MTS).

(b) "Charter vehicle" shall mean every vehicle which:

(1) Transports passengers or parcels or both over the public streets of the City;

(2) Is routed at the direction of the hiring passenger;

(3) Is prearranged in writing for hire;

(4) Is not made available through "cruising"; and

(5) Is hired by and at the service of a person for the benefit of themselves or a specified group.

(c) "Chief Executive Officer" shall mean the Chief Executive Officer of MTS or their designated representative.

(d) "City" and "Cities" shall mean the incorporated areas of the Cities of Chula Vista, El Cajon, Imperial Beach, La Mesa, Lemon Grove, National City, Oceanside, Poway, San Diego, Santee and any other City that has entered into a contractual agreement with MTS for the licensing and regulation of transportation services.

(e) "Compensation" shall mean any money, thing of value, payment, consideration, reward, tip, donation, gratuity or profit paid to, accepted, or received by the driver or owner of any vehicle in exchange for transportation of a person, or persons; whether paid upon solicitation, demand or contract, or voluntarily, or intended as a gratuity or donation.

(f) “County” shall mean the unincorporated area of the County of San Diego located within MTS’s jurisdictional boundaries if entered into a contractual agreement with MTS for the licensing and regulation of transportation services.

(g) "Cruising" shall mean the movement over the public streets of a taxicab or low-speed vehicle (LSV) in search of prospective passengers; except the term does not include either the travel of a taxicab or LSV proceeding to answer a call for service received by telephone or radio

from an intended passenger or the travel of such a vehicle, having discharged a passenger or passengers, returning to the owner's place of business or to its established point of departure.

(h) "Days" shall mean working days, exclusive of weekends and holidays for which MTS offices are closed.

(i) "Doing business" shall mean accepting, soliciting or transporting passengers for hire or compensation in a City or County.

(j) "Driver" shall mean every person operating any for-hire vehicle.

(k) "Driver's identification card" shall mean license, issued ~~pursuant to this Ordinance,~~by the County of San Diego Sheriff's Office (Sheriff), which permits a person to drive or assist in the operation of a for-hire vehicle and safety of the passenger within the City or County.

(l) "Electronically Booked" shall mean a taxicab trip booked through a taxicab dispatch service organization or transportation network company's online enabled application or internet website that provides an up-front price. An up-front price shall be considered the total cost including all fees, exclusive of tip, that a passenger has agreed to pay at the time of booking.

(m) "Employ" as used in this Ordinance includes any form of agreement or contract under which the driver may operate the permit holder's for-hire vehicle.

(n) "Exclusive ride" shall mean exclusive use of a for-hire vehicle by one or more related passengers at a time.

(o) "For-hire vehicle" shall mean every vehicle, other than public transit vehicles or vehicles involved in an organized carpool not available to the general public, which is operated for any fare for compensation and used for the transportation of passengers over public streets, irrespective of whether such operations extend beyond the boundary limits of said City or County. Such for-hire vehicles shall include taxicabs, vehicles for charter, jitneys, nonemergency medical vehicles, sightseeing vehicles, and LSVs.

(p) "Group ride" shall mean shared use of a taxicab or LSV where a group of related passengers enter at the same point of origin and disembark at the same destination and pay a single fare for the trip.

(q) "Hearing officer" shall mean any person or entity that meets the requirements of this Ordinance and that has been retained to conduct administrative hearings.

(r) "Jitney" shall mean every vehicle which:

(1) Transports passengers or parcels or both over the public streets of the City; and

(2) Follows a fixed route of travel between specified locations along its route on a variable schedule or operates a flexible route within a geographic boundary and specific timeframes as approved by MTS, with the fare based on a per capita charge established in its permit.

(s) A "low-speed vehicle" or "LSV" is a motor vehicle, other than a motor truck, having an unladen weight of 1,800 pounds or less, that is capable of propelling itself at a minimum speed of 20 miles per hour and a maximum speed of 25 miles per hour, on a paved level surface. It shall

only operate within a geographic boundary as approved by MTS. For the purposes of this section, a "low-speed vehicle" or “LSV” is not a golf cart, except when operated pursuant to California Vehicle Code Section 21115 or 21115.1.

~~(t) "Medallion" shall mean the numbered plate, sticker, or decal issued by MTS to the permit holder which is displayed on a for-hire vehicle to indicate the authorized use or uses of that vehicle.~~

~~(u~~(t) "MTS" shall mean the San Diego Metropolitan Transit System, a public agency created pursuant to Public Utilities Code Section 120050 et seq.

(~~v~~u) "MTS inspector" shall mean those individuals, regardless of job title, who are authorized by the Board, by ordinance, to enforce the provisions of this Ordinance.

(~~w~~v) "Nonemergency medical vehicle" shall mean every vehicle which: transports persons, regardless of whether specialized transportation equipment or assistance is needed, for primarily medical purposes, over the public streets of the City. Medical purposes is defined as providing transportation services to or from the following places: hospitals, convalescent homes, retirement homes, homes receiving funding for the board and care of residents living in those homes, medical or rehabilitation clinics, senior citizen centers, and any other like social service category, over the public streets of the City. It shall be the responsibility of the transportation provider to determine if the service is primarily for medical purposes.

(~~x~~w) "Operate" or "Operating" shall refer to the solicitation or acceptance of a fare within City or County for compensation or providing passenger transportation for compensation, regardless if such compensation is obtained from the passenger or a third party. It shall also include, as the context may require, the act of driving, managing or directing the utilization of one or more for-hire vehicles.

(~~y~~x) "Owner" shall mean the person, partnership, association, firm or corporation that is the registered owner of any for-hire vehicle and that holds the right to use the vehicle for its advantage.

(~~z~~y) "Passenger" shall mean every occupant other than the driver of the for-hire vehicle.

(~~aa~~z) "Permit" shall mean the authority under which a person, firm, partnership, association, or corporation may operate a for-hire vehicle as a business.

(~~bb~~aa) "Permit holder" shall mean any person or approved entity operating a business under a for-hire vehicle permit.

(bb) “Permit Number" shall mean the numbered plate, sticker, or decal issued by MTS to the permit holder which is displayed on a for-hire vehicle to indicate the authorized use or uses of that vehicle.

(cc) "Shared ride" shall mean nonexclusive use of a for-hire vehicle by two or more unrelated passengers traveling between different points of origins and/or destination, and traveling in the same general direction.

(dd) "Sightseeing vehicle" shall mean every vehicle which:

(1) Transports passengers for sightseeing purposes of showing points of interest over the public streets of the City; and

(2) Charges a fee or compensation therefor; regardless of whether any fee or compensation is paid to the driver of such sightseeing vehicle, either by the passenger or by the owner or by the person who employs the driver or contracts with the driver or hires such sightseeing vehicle with a driver to transport or convey any passenger; and irrespective of whether or not such driver receives any fee or compensation for their services as driver.

(ee) "Stands" shall mean public areas designated for specific use of for-hire vehicles.

(ff) "Street" shall mean any place commonly used for the purpose of public travel.

(gg) “Substantially Located” shall mean where the primary business address of the taxicab permit holder is located and/or the jurisdiction where the largest share of the taxicab permit holder’s total number of prearranged and non-prearranged trips originate over the previous calendar year, as determined annually. Trip logs and/or other documentation shall be used to substantiate the jurisdiction where the largest share of taxicab permit holder’s total number of originating trips occur over the applicable time period.

(hh) "Taxicab" shall mean every vehicle other than a vehicle-for-charter, a jitney, a nonemergency medical vehicle, a sightseeing vehicle, or LSV which:

(1) Carries not more than eight (8) passengers excluding the driver;

(2) Transports passengers or parcels or both over City or County public streets;

(3) Is made available for hire on call or demand through "cruising," at taxi stands, by telephone, mobile telephone application or website, or other communication devices to destination(s) specified by the hiring passenger; and

(4) Is Substantially Located within the jurisdiction of City and/or County.

(ii) "Taximeter" shall mean any instrument, appliance, device, or machine by which the charge for hire of a passenger-carrying vehicle is calculated, either for distance traveled or time consumed, or a combination of both, and upon which such charge is indicated by figures. Includes both a Hard Meter and a Soft Meter.

(1) A Hard Meter is a Taximeter that has a prefixed fare with an external seal approved by the County of San Diego Agriculture, Weights and Measures and mileage is calculated based on distance and time.

(2) A Soft Meter is a Taximeter that is provided through a smartphone or tablet that uses GPS or other on-board diagnostics approved by the California Department of Food and Agriculture Division of Measurement Standards to calculate distance and rates.

(jj) "Vehicle" is a device by which any person or property may be propelled, moved, or drawn upon a street, excepting a device moved exclusively by human power or used exclusively upon stationary rails or tracks.

(kk) “Vehicle for Developmentally Disabled Persons (VDDP) driver certificate” shall mean certificate issued by California Highway Patrol pursuant to Vehicle Code section 12523.6, which is required for any driver who primarily transports persons with developmental disabilities on a for-hire basis. A VDDP driver certificate with a commercial driver’s license may be used in lieu of a driver identification card to drive a for-hire vehicle within the City or County, unless for a taxicab.

(Section 1.1 amended 7/30/2026)
(Section 1.1 amended 3/14/2024)
(Section 1.1 amended 10/19/2023)
(Section 1.1 amended 1/20/2022)
(Section 1.1 amended 11/12/2020)
(Section 1.1 amended 10/10/2019)
(Section 1.1 amended 2/14/2019)
(Section 1.1 amended 11/8/2018, effective 1/1/2019)
(Section 1.1 amended 9/20/2018)
(Section 1.1 amended 12/14/2017)
(Section 1.1 amended 5/12/2016)
(Section 1.1 amended 8/7/2003)
(Section 1.1 amended 11/14/2002)
(Section 1.1 amended 6/24/1999)
(Sections 1.1(d), 1.1(R)(1) amended 6/22/1995)
(Section 1.1 amended 1/12/1995)
(Section 1.1 amended 6/27/1991; effective 7/27/1991)
(Section 1.1 amended 5/23/1991; effective 6/23/1991)

Section 1.2 - Operating Permits

(a) No person shall engage in the business of operating any for-hire vehicle or in the business of providing any vehicle for the operation of vehicle for-hire services within the Cities or County without first having obtained an operating permit from the Chief Executive Officer or designated representative, which permit has not been revoked, suspended or otherwise canceled or terminated by operation of law or otherwise. A separate permit is required for each for-hire vehicle operated or provided for operation.

(b) An operating permit represents the granting of a privilege to operate a for-hire vehicle within the Cities, County or zones specified by the permit for the purpose of the public convenience and necessity. This privilege may be rescinded at any time by operation of law or otherwise.

(c) A person who obtains an operating permit shall be responsible for the provision of vehicle-for-hire services in accordance with the provisions of this Ordinance and shall exercise due diligence to assure that drivers of the permitted vehicles adhere to all pertinent requirements of this ordinance.

(Section 1.2 amended 11/8/2018, effective 1/1/2019)
(Section 1.2 amended 12/14/2017)
(Section 1.2 amended 8/7/2003)
(Section 1.2 amended 11/14/2002)
(Section 1.2 amended 6/24/1999)

Section 1.3 - Application for Permit

(a) All persons applying to the Chief Executive Officer for new permit(s) for the operation of one or more for-hire vehicles shall file with the Chief Executive Officer a sworn application on forms provided by the Chief Executive Officer, stating as follows:

(1) The applicant name, company name, doing business as ("DBA") name if different than company name, ~~mailing and~~ business address (a business address ~~or mailing~~

~~address~~ may include, ~~but is not limited to,~~ a ~~Post Office [PO] Box or~~ dispatch service address if a taxicab permit applicant), e-mail address, and telephone number of the permit applicant. If a taxicab permit applicant, the business address will also serve the purpose of establishing where Substantially Located;

~~(2) If applying as a corporation, operating~~(2) Operating records are required, as defined in Section 1.10;

(3) The name and address of all legal and registered owner(s) of the vehicle(s);

(4) The number of vehicle(s) for which a permit(s) is desired;

~~(5) The rates of fare which the applicant proposes to charge for vehicle for hire services. This requirement does not apply to taxicab permit applicants;~~

~~(6~~(5) If the application is for a jitney or LSV, a detailed description of the geographic area in which said permit shall be in ~~existence~~operation; and

(~~7~~6) Such other information as the Chief Executive Officer may in their discretion require.

b) The applicant shall also submit, with the application, a nonrefundable application fee prior to the permit approval. Upon issuance of the permit, the applicant shall also pay an initial nonrefundable permit vehicle regulatory fee to be determined by the Chief Executive Officer in order to recover the cost of processing such applications.

(Section 1.3 amended 7/30/2026
(Section 1.3 amended 3/14/2024
(Section 1.3 amended 1/20/2022)
(Section 1.3 amended 11/12/2020)
(Section 1.3 amended 11/8/2018, effective 1/1/2019)
(Section 1.3 amended 12/14/2017)
(Section 1.3 amended 2/12/2015)
(Section 1.3 amended 11/15/2012)
(Section 1.3 amended 8/7/2003)
(Section 1.3 amended 11/14/2002)

Section 1.4 - Issuance of Permit

(a) Before a permit may be approved or renewed, the applicant shall pay an initial regulatory fee in an amount to be determined by the Chief Executive Officer.

(b) The Chief Executive Officer shall deny the approval of a permit upon making a finding:

(1) That the applicant is under eighteen (18) years of age; or

(2) That- the applicant has been convicted of, or held by any final administrative determination to have been in violation of any statute, ordinance, or regulation which would have resulted in suspension or revocation of the permit in accordance with Section 1.13 of this Ordinance; or

(3) That the applicant provided false information of a material fact in an application within the past year.

(c) No permit shall be approved or renewed unless evidence of compliance with applicable MTS regulations.

(d) When the permit has been approved and upon determination by the Chief Executive Officer that the for-hire vehicle, after appropriate inspection, meets the requirements of this Ordinance, the Chief Executive Officer will issue a numbered ~~medallion~~Permit Number(s) to be affixed to the for-hire vehicle.

(Section 1.4 amended 7/30/2026)
(Section 1.4 amended 12/8/2022)
(Section 1.4 amended 11/12/2020)
(Section 1.4 amended 11/8/2018, effective 1/1/2019)
(Section 1.4 amended 12/14/2017)
(Section 1.4 amended 2/12/2015)
(Section 1.4 amended 11/15/2012)
(Section 1.4 amended 11/14/2002)

Section 1.5 - ~~Transfer and Administration of Permits~~Fee Schedule

~~(a) Each permit issued pursuant to the provisions of this section is separate and distinct and shall be transferable from the permit holder to another person or entity only with the approval of the Chief Executive Officer, and upon meeting the requirements of this Ordinance.~~

~~(b) The proposed transferee shall file with the Chief Executive Officer a sworn application for the transfer and shall comply with the requirements of Section 1.3. The permit holder shall certify in writing that the permit holder has notified the proposed transferee of the requirements of this section pertaining to the transfer of a permit. Whenever an application for a transfer of permit is filed, the Chief Executive Officer shall process the application for transfer in accordance with Section 1.4 of this Ordinance.~~

~~(c)~~ The Chief Executive Officer shall charge regulatory fees to affect the full cost recovery of activities associated with the administration, regulation, or issuance, ~~or transfer~~ of for-hire vehicle permits and associated records.

~~(1)~~ Changes in fee schedules affecting permits shall comply with MTS Board Policy No. 34 and be posted, at a minimum, on the MTS website and notice of such posting will be sent to all permit holders' email address. Changes shall be effective thirty (30) calendar days thereafter.

~~(2) Any person objecting to a particular fee or charge may file, within ten (10) calendar days of posting of such changes, an appeal for review with the Chief Executive Officer who shall thereafter process it in accordance with Section 1.17; provided, however, that the sole issue to be determined on review is whether the fee or charge exceeds the reasonable costs for personnel salaries and administrative overhead associated with the particular administrative service or function.~~

(Section 1.5 amended 7/30/2026)
(Section 1.5 amended 11/12/2020)
(Section 1.5 amended 11/8/2018, effective 1/1/2019)
(Section 1.5 amended 12/14/2017)

(Section 1.5 amended 2/12/2015)
(Section 1.5 amended 8/7/2003)
(Section 1.5 amended 11/14/2002)

Section 1.6 - Blank

The text of Section 1.6 is deleted in its entirety effective February 12, 2015.

(Section 1.6 deleted 2/12/2015)
(Section 1.6 amended 11/14/2002)

Section 1.7 - Blank

The text of Section 1.7 is deleted in its entirety effective October 24, 1998.

(Section 1.7 was deleted 9/24/1998)

Section 1.8 - Equipment and Operating Regulations

(a) No ~~medallion~~Permit Number shall be issued for a vehicle unless the vehicle conforms to all the applicable provisions of this Ordinance.

(b) The privilege of engaging in the business of operating a for-hire vehicle in a City or County granted in the permit is personal to the permit holder, who must be the owner of the for-hire vehicle. The rights, requirements, and responsibilities which attach to the permit remain with the holder at all times the for-hire vehicle is operated under the authority of the permit. These rights, requirements and responsibilities, which include, but are not limited to, the requirements of this Ordinance, will remain unaffected by any agreement or contractual arrangement between the permit holder and those persons who operate for-hire vehicles, irrespective of the form or characterization of the agreement under which the driver operates the for-hire vehicle.

(c) The permit holder shall maintain an email address, ~~mailing~~business address that can accept mail directed to company, and a business telephone in which the permit holder can be reached during reasonable business hours and during all hours of operation. The permit holder shall, in the case of any change in their email address, mailing address, or business telephone, notify the Chief Executive Officer in writing of such change within forty-eight (48) hours of the effective date of this change.

(d) If a taxicab, permit holders must participate in the pull-notice program pursuant to Section 1808.1 of the Vehicle Code and enroll all employed or contracted drivers who drive a vehicle for permit holder.

(1) Upon the termination of the employee or contractor driver, the permit holder shall notify the Department of Motor Vehicles (DMV) to discontinue the driver's enrollment in the pull notice system.

(2) Permit holders shall present upon request, during regular business hours, to MTS and/or the ~~Sheriff's Department~~Sheriff, as well as during annual permit renewal, proof of enrollment and names of any and all drivers enrolled in the DMV driver pull-notice program pursuant to Section 1.8(d) of this Ordinance.

(3) Permit holders who fall under one or more of the following categories must enroll in the DMV pull-notice program: if registered with the State of California as a Corporation

and or LLC; if own more than one vehicle; employs or contracts a lease driver(s); and/or vehicle is otherwise driven by more than one driver.

(e) Before a for-hire vehicle is placed in service and at least annually thereafter, the for-hire vehicle shall be delivered to a certified Automotive Service Excellence or Bureau of Automotive Repair registered facility for mechanical inspections, or other place designated by the Chief Executive Officer for inspection. Certified mechanics and MTS inspectors shall inspect the for-hire vehicle and its equipment to ascertain whether the vehicle complies with the provisions of this Ordinance. Failure to produce the vehicle for inspection within a timeframe determined by MTS shall be cause for suspension or revocation of the permit for such vehicle.

(f) Any MTS inspector or peace officer, after displaying proper identification, may make reasonable and periodic inspections of any for-hire vehicle operating under an MTS permit for the purpose of determining whether the vehicle is in compliance with the provisions of this Ordinance.

(g) Any for-hire vehicle which fails to meet the requirements of the California Vehicle Code or this section after inspection shall be immediately ordered out-of-service by an MTS inspector or peace officer if it is unsafe for service. Ordering a vehicle out-of-service does not constitute a suspension or revocation of the permit. A vehicle is deemed unsafe for service when any of the following conditions exists:

(1) Tires fail to meet the requirements of the California Vehicle Code;

(2) Headlights, taillights or signal lights are inoperable during hours of darkness (sunset to sunrise);

(3) Windshield wipers are inoperable during rainy conditions;

(4) Taximeter is not working, the Taximeter displays signs of tampering, the seal of a Hard Meter is broken, the County of San Diego seal of a Hard Meter is more than thirteen (13) months old from the date of issuance, a Service Agent's temporary seal of a Hard Meter is more than ninety (90) days old from the date of issuance, or a Soft Meter displays technology not approved by the California Department of Food and Agriculture Division of Measurement Standards or does not appear to be operating as is intended or approved;

(5) Brakes, brake lights or brake system are inoperable or otherwise fail to meet the requirements of the California Vehicle Code;

(6) Excessive play in steering wheel exceeding three (3) inches;

(7) Windshield glass contains cracks or chips that interfere with driver's vision;

(8) Any door latch is inoperable from either the interior or exterior of the vehicle;

(9) Any seat is not securely fastened to the floor;

(10) Seat belts, when required, fail to meet requirements of the California Vehicle Code;

(11) Either side or rearview mirrors are missing or defective;

(12) Any vehicle safety system light is activated; and

(13) Any other condition which reasonably and rationally pertains to the operating safety of the vehicle or to passenger or pedestrian safety.

(h) If the vehicle is not unsafe but is unsuitable or otherwise in violation of this Ordinance or any vehicle condition/equipment section of the California Vehicle Code, the operator or permit holder, as appropriate, shall be subject to a seventy-two (72) hours correction notice.

(1) Failure to correct such violation within the seventy-two (72) hours shall then be cause to order the vehicle out-of-service. When a vehicle is ordered out-of-service, the ~~medallion~~Permit Number shall be immediately removed.

(2) Before the vehicle may again be placed in service, the violation shall be corrected and the vehicle shall be inspected by a certified ~~mechanics~~mechanic or MTS inspector

(3) The ~~medallion~~Permit Number shall be reaffixed when the MTS inspector finds that the vehicle meets prescribed standards.

(i) The interior and exterior of the for-hire vehicle shall be maintained in a safe and efficient operating condition, and meet California Vehicle Code requirements and the requirements of this Ordinance at all times when in operation. The following minimum vehicle standards must be maintained to comply with this section:

(1) Wheels. Hubcaps or wheel covers shall be on all wheels for which hubcaps or wheel covers are standard equipment.

(2) Body Condition. There shall be no tears or rust holes in the vehicle body and no loose pieces hanging from the vehicle body. Fenders, bumpers, and light trim shall be securely fixed to the vehicle. No extensive unrepaired body damage shall be allowed and exterior paint shall be free from excessive fading. The vehicle shall be equipped with front and rear bumpers. The exterior of the vehicle shall be maintained in a reasonably clean condition so as not to obscure approved vehicle markings.

(3) Lights. Headlights shall be operable on both high and low beam. Taillights, parking lights, signal lights, and interior lights shall all be operable.

(4) Wipers. Each vehicle shall be equipped with adequate windshield wipers maintained in good operating condition.

(5) Brakes. Both the parking and hydraulic or other brake system must be operable.

(6) Steering. Excessive play in the steering mechanism shall not exceed three (3) inches free play in turning the steering wheel from side to side.

(7) Engine. The engine compartment shall be reasonably clean and free of uncontained combustible materials.

(8) Mufflers. Mufflers shall be in good operating condition.

(9) Windows. The windshield shall be without cracks or chips that could interfere with the driver's vision. All other windows shall be intact and able to be opened and closed

as intended by the manufacturer. The windows and windshield shall be maintained in a reasonably clean condition so as not to obstruct visibility.

(10) Door Latches. All door latches shall be operable from both the interior and exterior of the vehicle.

(11) Suspension. The vehicle's suspension system shall be maintained so that there are no sags because of weak or broken springs or excessive motion when the vehicle is in operation because of weak or defective shock absorbers.

(12) Seats. All seats shall be securely fastened. Seat belts, when required by the California Vehicle Code, shall be installed. The upholstery shall be free of grease, holes, rips, torn seams, and burns.

(13) Interior. The interior of each vehicle and the trunk or luggage area shall be maintained in a reasonably clean condition, free of foreign matter, offensive odors, and litter. The seats shall be kept reasonably clean and without large wear spots. The door handles and doors shall be intact and clean. The trunk or luggage area shall be kept empty except for spare tire and personal container for the driver not exceeding one (1) cubic foot in volume and emergency equipment, to allow maximum space for passenger luggage and belongings.

~~(j) Each for-hire vehicle, except taxicabs and LSVs, shall contain:~~

~~(1) A fire extinguisher of the dry chemical or carbon dioxide type with an aggregate rating of at least 5 B/C units and a current inspection card affixed to it.~~

~~(2) A minimum of three (3) red emergency reflectors.~~

~~(3) A first-aid kit containing medical items to adequately attend to minor medical problems.~~

(k) In the event that a for-hire vehicle for which a permit has been approved is taken out of service, by the permit holder for maintenance or any purpose, other than a violation of any provision of this Ordinance, a ~~spare~~temporary vehicle operating permit may be granted. The ~~spare~~temporary vehicle operating permit shall only be valid for the vehicle for which it was issued. The permit holder may only utilize a ~~spare~~temporary for-hire vehicle which has been duly inspected by an MTS inspector and approved prior to use. The permit holder must immediately inform an MTS inspector when a ~~spare~~temporary for-hire vehicle is in use and the location of the disabled vehicle. The ~~spare~~temporary vehicle will be issued a "~~spare~~temporary vehicle" sticker which must be affixed to the left rear portion of the for-hire vehicle for which it is approved, in plain view from the rear of the for-hire vehicle. The permit holder may utilize one (1) ~~spare~~temporary for-hire vehicle for a period not to exceed thirty (30) calendar days from the date of issuance. This subsection shall not be construed, nor deemed to replace, those provisions in this Ordinance which apply to permanent replacement of a for-hire vehicle.

(l) The ~~medallion~~Permit Number issued to the permit holder must be affixed by an MTS inspector on the for-hire vehicle for which the permit is approved in plain view from the rear of the for-hire vehicle. The permit holder must immediately report the loss, destruction, or defacing of a ~~medallion~~Permit Number to the Chief Executive Officer. Except as provided in Subsection (k), it shall be unlawful to operate a for-hire vehicle without the ~~medallion~~Permit Number affixed and visible.

(m) There shall be displayed in the passenger compartment of each for-hire vehicle between the sun visors, in full view of the passengers in the front and rear seats, a card not less than ~~ten (10~~standard letter size eleven (11) inches wide by ~~six (6~~eight and half (8 1/2) inches high in size. Posted on this card, utilizing "Universe" font in black ink on white background, shall be:

1) The first line of the card, 3/4 inch in height, shall say one of the following according to permit type: TAXICAB, SIGHTSEEING, CHARTER, NONEMERGENCY, LOW-SPEED VEHICLE, OR JITNEY LOST AND FOUND.

2) Below this, the card shall include the ~~vehicle medallion number~~Permit Number in three-inch numerals.~~—~~

3) Below the ~~medallion number~~Permit Number, the name, address, and phone number of the MTS For-Hire Vehicle Administration and the permit holder and/or permit holder trade name shall be printed, 1/4-inch in height. If a taxicab, the name, phone number and email of the dispatch service shall also be included.

4) Without approval from MTS, no other signs, markings, lettering, decals, or any type of information shall be displayed within ~~18 inches around~~ the ~~card.~~vehicle

(n) Advertisements, whether displayed on the inside or outside of the vehicle, shall be posted in accordance with MTS Board Policy No. 21, Revenue-Generating Display Advertising, Concessions, and Merchandise, any guidelines developed by the Chief Executive Officer, and the provisions of this Ordinance. Advertisements shall not be displayed without prior approval from MTS.

(o) The driver of each for-hire vehicle ~~may either~~must carry~~: a map of the City or County, published within the past two (2) years; or an~~ electronic device equipped with a GPS enabled map, which shall be displayed to any passenger upon request.

(p) The maximum rates of fare charged for for-hire vehicle services shall be clearly and conspicuously displayed in the passenger compartment, unless if a taxicab which shall comply with Section 2.2(d) of this Ordinance.

(q) Each for-hire vehicle ~~licensed~~permitted to operate in the City or County shall have located on the passenger side dashboard area a driver identification card provided by the ~~County of San Diego~~ Sheriff or provide upon a request a valid VDDP driver certificate with a commercial driver's license. The driver identification card shall have no alterations or information covered. The driver identification card shall be visible to passengers, peace officers and MTS inspectors so they can easily view the driver identification card from either inside or outside the vehicle. ~~The driver identification card issued by the Sheriff shall bear the following information:~~

~~(1) The number of the license of the driver;~~

~~(2) The name and business address of the driver;~~

~~(3) The name of the owner of the vehicle; and~~

~~(4) A small photograph of the driver.~~

(r) Each for-hire vehicle shall be equipped with a rearview mirror affixed to the right side of the vehicle, as an addition to those rearview mirrors otherwise required by the California Vehicle Code.

(s) The driver shall offer ~~each~~the passenger ~~a~~the option of an electronic or printed receipt upon payment of the fare. The receipt shall accurately show the date, the amount of the fare, the driver's name and ID number, the taxicab number, the company (DBA) name, and the dispatch service name with phone number if a taxicab.

(t) All disputes to fare shall be determined by the peace officer or MTS inspector most readily available where the dispute is had. It shall be unlawful for any person to fail or refuse to comply with such determination by the peace officer or MTS inspector.

(u) It is unlawful for any person to refuse to pay the lawful fare of a for-hire vehicle after employing or hiring the same.

(v) The driver of any for-hire vehicle shall promptly obey all lawful orders or instructions of any peace officer, fire fighter, or MTS inspector.

(w) No driver of any for-hire vehicle shall transport any greater number of persons, including the driver, than the manufacturer's rated seating capacity for the vehicle.

~~(x) It shall be unlawful for any person to solicit business for a for-hire vehicle by making a contract or agreement with any owner of any hotel, apartment house, motel, inn, rental units, restaurant, or bar, or with the agent or employees of such owner, by which the owner, agent or employee receives any type of payment or commission for recommending or directing any passenger to a specific for-hire vehicle or company. It shall be unlawful for any permit holder, association, or driver to have or make a contract or agreement with any owner of any hotel, apartment house, motel, inn, rental units, restaurant, or bar, or with the agents or employees of such owner, by which the permit holder, association or driver receives any type of payment or commission for recommending or directing any passenger to an establishment operated by a specific owner.~~

~~(y~~(x) The driver of a for-hire vehicle shall wear, in a manner clearly visible on their person, ~~an~~a driver identification card ~~approved~~issued by the ~~Chief Executive Officer~~Sheriff.

(~~z~~y) The Board specifically finds that the dress, grooming, and conduct of for-hire vehicle drivers affect the public health and safety, particularly as it relates to visitors and the tourist industry. Therefore, while driving or operating a for-hire vehicle, drivers shall be hygienically clean, well-groomed, and neat and suitably dressed. Violations of this subsection are administrative in nature and shall not be the subject of criminal prosecution.

(1) The term "hygienically clean" shall refer to that state of personal hygiene, body cleanliness, and absence of offensive body odor normally associated with bathing or showering on a regular basis.

(2) The term "well-groomed" shall mean that, that scalp or facial hair shall be combed or brushed and that all clothing is clean, free from soil, grease and dirt, and without unrepaired rips or tears.

(3) The term "neat and suitably dressed" shall be interpreted to mean that: driver is wearing appropriate clothing to operate a for-hire vehicle; ~~-~~drivers shall wear shoes; driver cannot wear as an outer garment any of the following:~~-~~ undershirt or underwear, tank tops, body shirts (see-through mesh), swim wear, jogging or warm-up suits or sweatshirts or similar attire, jogging or bathing shorts or trunks, or sandals; and trouser-type shorts that are no shorter than four inches above the center of the kneecap are permissible.

~~(aa) For-hire vehicles shall comply with the California Vehicle Code, e.g., not impede traffic, and, where applicable, not operate on streets where posted speed limits are above 35 miles per hour.~~

(z) For-hire vehicle drivers, including taxicab, shall not load or unload passengers in traffic lanes.

(~~bb~~aa) Smoking is not permitted at any time inside a MTS-permitted vehicle.

(~~cc~~bb) A driver, permit holder or dispatch service organization shall not prejudice, disadvantage, or require a different rate or provide different service to a person because of race, national origin, religion, color, ancestry, physical disability, medical condition, occupation, marital status or change in marital status, sex or any characteristic listed or defined in Section 11135 of the Government Code.

(~~dd~~cc) A driver shall not use rude or abusive language toward a passenger(s) or conduct any physical action that a reasonable person would construe as threatening or intimidating.

(~~ee~~dd) A driver may refuse a fare if it is readily apparent that the prospective or actual fare is a hazard to the driver or operator. A driver is not obligated to transport any person who is verbally or otherwise abusive to the driver. Such incidents shall also be noted on the trip log and notification shall be immediately sent to the dispatch service organization, if a taxicab, which shall record the incident and keep the record for the minimum of 6 months.

(~~ff~~ee) A driver may decline to accept a taxicab trip that is Electronically Booked, so long as all other requirements of Section 1.8 are followed.

(~~gg~~ff) A driver shall not refuse or discourage a prospective or actual fare based upon trip length within City or County. A vehicle designated as an LSV, sightseeing or jitney may refuse a prospective or actual fare if the trip distance is outside allowed areas of operations.

~~(hh~~

(gg) A driver shall not refuse or discourage a prospective or actual fare based upon method of payment. A ~~D~~driver shall not refuse payments by credit card~~.~~ or contactless credit card payment methods.

~~(ii) A failure to promptly dispatch (within the standards required by Sections 2.6(a)(1), (2), and (3) of this Ordinance), or any action by a driver of any taxicab or LSV to refuse or discourage a prospective or actual passenger~~

(hh) A driver shall not refuse or discourage a prospective or actual fare based on trip purpose (e.g. transport ~~foodstuffs~~food or who must meet a medical appointment).

(~~jj~~ii) No driver shall stop, park, or otherwise leave standing any MTS permitted vehicle within fifteen (15) feet of any fire plug ~~except as modified in Section 2.5 of this Ordinance~~.

(~~kk~~jj) No driver shall stop, park or otherwise leave standing any MTS permitted vehicle in a disabled parking zone except as authorized per California Vehicle Code section 22507.8.

(~~ll~~kk) If a taxicab, proof that vehicle(s) meet California Air Resources Board criteria for zero emissions/low emissions.

(Section 1.8 amended 7/30/2026)
(Section 1.8 amended 3/14/2024)
(Section 1.8 amended 12/8/2022)
(Section 1.8 amended 1/20/2022)
(Section 1.8 amended 11/12/2020)
(Section 1.8 amended 10/10/2019)
(Section 1.8 amended 11/8/2018, effective 1/1/2019)
(Section 1.8 amended 12/14/2017)
(Section 1.8 amended 10/13/2016)
(Section 1.8 amended 5/12/2016)
(Section 1.8 amended 2/12/2015)
(Section 1.8 amended 8/7/2003)
(Section 1.8 amended 11/14/2002)
(Section 1.8 amended 9/24/1998)
(Section 1.8 amended 2/13/1997)
(Section 1.8 amended 6/24/1993)

Section 1.9 - Public Liability

(a) It shall be unlawful to operate a for-hire vehicle unless the permit holder establishes and maintains in effect one of the forms of financial responsibility specified in this section.

(1) This requirement may be met by maintaining a valid policy of insurance executed and delivered by a company authorized to carry on an insurance business, the financial responsibility of which company has been approved by the Chief Executive Officer. The terms of the policy shall provide that the insurance company assumes financial responsibility for injuries to persons or property caused by the operation of the for-hire vehicle in an amount determined by the Chief Executive Officer.

(2) The permit holder may also meet this requirement by obtaining a certificate of self-insurance for a specified amount approved by the Board and pursuant to the applicable provisions of the California Vehicle Code.

(b) A valid proof of insurance issued by the company providing the insurance policy required under Subsection (a) (1) of this section shall be filed with and approved by the Chief Executive Officer. This certificate shall provide that MTS is a named certificate holder and shall be placed in each vehicle, per California Vehicle Code Section 16020. It shall also provide that the insurer will notify MTS of any cancellation and that the cancellation notice be received at least thirty (30) days prior to cancellation of the policy. The certificate shall also state:

(1) The full name of the insurer;
(2) The name and address of the insured;
(3) The insurance policy number;
(4) The type and limits of coverage;
(5) The specific vehicle(s) insured;
(6) The effective dates of the certificate; and
(7) The certificate issue date.

(Section 1.9 amended 11/12/2020)
(Section 1.9 amended 9/17/2015)
(Section 1.9 amended 11/14/2002)

Section 1.10 – ~~Financial~~ Ownership and Operating Records: Reporting Requirements

(a) Every person engaged in the business of operating a for-hire vehicle within the City under a permit granted by the Chief Executive Officer shall maintain:

~~(1) Financial records, including but not limited to the current executed taxicab driver lease agreement that includes all aspects of the business relationship between the permit holder and the lessee, and written receipts of all payments from lessee in accordance with good accounting practices;~~

(1) Reasonable financial responsibility to conduct for-hire vehicle operations in accordance with the requirements of this Ordinance;

(2) Ownership records; and

(3) Operating records in a form, and at intervals, which shall be determined from time to time by the Chief Executive Officer.

(b) Ownership and operating records shall be made available to the Chief Executive Officer upon demand at any reasonable time. The permit holder shall retain operating records for a minimum of six (6) months from the date the records are created.

(c) For purposes of this section, ownership records shall include, but are not limited to, the following:

(1) Copies of the Articles of Incorporation as filed;

(2) Records identifying all corporate officers and members of the corporation's Board of Directors. A corporation shall report any change in corporate officers ~~or members of its Board of Directors~~ to MTS within ten (10) days of the effective date.

(3) The registration cards issued by the State of California Department of Motor Vehicles to the vehicle owner for all for-hire vehicles operated under the authority of an MTS for-hire vehicle permit. Valid proof of registration shall be maintained in the vehicle at all times.

(d) For purposes of this section, operating records shall include, but are not limited to, the following:

~~(1) Typed or written dispatch records for taxicab companies which operate their own dispatch service;~~

~~(2) Any logs~~(1) Any logs written or electronic which a for-hire vehicle driver keeps describing the trips carried by a for-hire vehicle other than a taxicab;

(~~3~~2) Copies of the daily trip log required by taxicab or LSV drivers under Section 2.4 (o); and

(~~4~~3) Any other similar records.

(e) As a condition of permit renewal, upon permit renewal every permit holder shall file with the Chief Executive Officer a signed statement which shall report and attest to the accuracy of the following information:

(1) The individual name(s), business name, business ~~mailing~~ address, e-mail address, and telephone number of the permit holder(s);

(2) The name and address of all legal and registered owner(s) of the for-hire vehicle(s);

~~(3) The name and address of each person with a financial interest in the business which operates the vehicle(s);~~

~~(4~~(3) The year, manufacturer, model, vehicle identification number, license plate, and ~~medallion number~~Permit Number affixed to the permitted vehicle(s); and

(~~5~~4) Proof of enrollment and names of any and all drivers enrolled in the DMV driver pull-notice program pursuant to Section 1.8(d) of this Ordinance.

(f) ~~If the permit holder is an individual, the~~The permit holder must ~~email, mail or appear in person in the offices of MTS to file the~~submit the annual statement~~; if the permit holder is a partnership, one of the partners must email, mail or appear in person in the offices of MTS to file the statement; if the permit holder is a corporation or LLC, an officer of the corporation, or a member of the LLC, authorized to represent the company, must email, mail or appear in person in the offices of MTS to file the statement. If email or mail is used, the email address or mailing address used~~ as required by the ~~permit holder must be an email address or mailing address that is on file with the~~ Chief Executive Officer or designee. Failure to produce the statement may result in permit suspension or denial of permit renewal.

(Section 1.10 amended 7/30/2026)
(Section 1.10 amended 3/14/2024)
(Section 1.10 amended 12/8/2022)
(Section 1.10 amended 11/12/2020)
(Section 1.10 amended 11/8/2018, effective 1/1/2019)
(Section 1.10 amended 5/12/2016)
(Section 1.10 amended 2/12/2015)
(Section 1.10 amended 8/7/2003)
(Section 1.10 amended 11/14/2002)
(Section 1.10 amended 6/24/1993)

Section 1.11 - Destruction, Permanent Replacement, Retirement or Inactive Status of For-Hire Vehicles

(a) Whenever a for-hire vehicle is destroyed, rendered permanently inoperative, is sold, or the permit holder is no longer the owner of the for-hire vehicle, the permit holder shall notify the Chief Executive Officer in writing within forty-eight (48) hours.

(b) If a taxicab permit holder plans to change where it is Substantially Located, the permit holder shall notify the Chief Executive Officer and the new jurisdiction in which it will become Substantially Located within six (6) months or as soon as practicable prior to making that change.

(c) A permit holder may place a for-hire vehicle under inactive status after written permission is obtained from the Chief Executive Officer. The following guidelines are to be used in granting permission for a for-hire vehicle to be placed and kept on inactive status:

(1) No laps in payment of annual regulatory fees during any time of inactive status;

(2) Permit must be in good standing (e.g. no pending disciplinary or enforcement action); and

(3) Annual statement must be filed in accordance with Section 1.10(e).

(d) At any time a permit holder may bring a for-hire vehicle under inactive status back into service after written permission is obtained from the Chief Executive Officer. The following guidelines are to be used in granting permission to return a for hire vehicle under inactive status back to service:

(1) Permit holder must notify Chief Executive Officer in writing of their intent to place their vehicle back into service;

(2) Permit holder must show proof of a valid vehicle insurance policy as required by Section 1.9;

(3) Permit holder must show proof of current vehicle registration;

(4) Permit holder must show proof of current subscription to a dispatch service organization, if a taxicab; and

(5) Vehicle must pass MTS required inspection.

(e) The Chief Executive Officer shall, as a matter of owner right, allow the replacement of a vehicle which is destroyed, rendered inoperative, or sold ~~or transferred~~, provided that the permit holder has complied with, and the for-hire vehicle is in conformance with, all applicable provisions of this Ordinance. An owner must remove the markings from the vehicle that indicate it is a taxicab or LSV before the owner disposes of it.

(Section 1.11 amended 7/30/2026)
(Section 1.11 amended 2/14/2019)
(Section 1.11 amended 10/13/2016)
(Section 1.11 amended 8/7/2003)
(Section 1.11 amended 11/14/2002)
(Section 1.11 amended 2/13/1997)

Section 1.12 - Driver's Identification Cards

(a) No person shall drive or operate any for-hire vehicle under the authority of a permit granted under this Ordinance unless such person: displays a valid driver's identification card obtained annually through the Sheriff ~~of the County of San Diego~~; or provides upon request a VDDP driver certificate with a commercial driver's license.

(b) No permit holder shall employ as a for-hire vehicle driver or operator any person who has not obtained a for-hire vehicle driver's identification card through the Sheriff ~~of the County of San Diego~~ or VDDP driver certificate with a commercial driver's license.

(c) No permit holder shall employ as a driver or operator any person whose privilege to operate a for-hire vehicle within the City has expired, or has been revoked, denied ~~or~~, suspended or prohibited.

(d) ~~A driver may drive for more than one permit holder.~~ The driver must~~, however,~~ have on file with and accepted by the Sheriff ~~of the County of San Diego,~~ a separate application on forms provided by the Sheriff, for each permit holder with whom ~~he has~~they have a current driving agreement. ~~A driver may have on file with the Sheriff a maximum of four (4) such applications at any one time. It shall be unlawful for a driver to accept or solicit passengers for hire in the City or County while operating the taxicab or LSV of any permit holder for whom the driver does not have such an application on file with the Sheriff.~~

(e) No person shall drive or operate any for-hire vehicle, under the authority of a permit granted under this Ordinance unless such person has successfully completed an MTS-approved driver safety training course concerning driver safety rules and regulations, map reading, crime prevention, courtesy and professionalism, and compliance with the ADA. As determined by the Chief Executive Officer, a corresponding qualification examination may be required.

(f) No person ~~who has received a notice of prohibition pursuant to Section 1.14, or~~ whose privilege to operate a for-hire vehicle within the City has expired, or has been suspended, revoked or denied by the Sheriff, or California Highway Patrol~~, or the Chief Executive Officer~~ shall drive or operate a for-hire vehicle within the City.

~~(g) No for-hire vehicle driver's identification card shall be issued or renewed by the Sheriff to any of the following persons:~~

~~(1) Any person under the age of eighteen (18) years.~~

~~(2) Any person who has been convicted of a felony involving a crime of force or violence against any person, or the theft of property, unless five (5) years have elapsed since their discharge from a penal institution or satisfactory completion of probation for such conviction during which period of time their record is good.~~

~~(3) Any person who has been convicted of assault, battery, resisting arrest, solicitation of prostitution, any infraction, misdemeanor, or felony involving force and violence, or any crime reasonably and rationally related to the paratransit industry or any similar business operation which bears upon the integrity or ability of the driver to operate a for-hire vehicle business and transport passengers, unless five (5) years shall have elapsed from the date of discharge from a penal institution or the satisfactory completion of probation for such conviction.~~

~~(4) Any person who, within the five (5) years immediately preceding the processing of the application, has been convicted of or held by any final administrative determination to have been in violation of any statute, ordinance, or regulation reasonably and rationally related to the for-hire vehicle industry or any similar business operation which would have authorized the suspension or revocation of the driver's identification card in accordance with Section 1.14 of this Ordinance.~~

~~(5) Any person who is required to register as a sex offender pursuant to the California Penal Code.~~

~~(6) Any person who has provided false information of a material fact in their application within the past five (5) years.~~

~~(7) No person shall obtain or renew a driver's identification card unless such person has successfully completed a driver safety training course approved by the Chief Executive Officer.~~

~~(8) When a driver permanently no longer drives for an MTS For-Hire Vehicle Administration permit holder, the permit holder shall report this to the Sheriff's Department within ten (10) calendar days.~~

~~(h) The Sheriff is authorized to issue temporary for-hire vehicle driver identification cards pending the approval or denial of an application for a regular for-hire vehicle driver identification card. No temporary for-hire vehicle driver identification card shall be issued without the satisfactory completion of a local law enforcement agency record check of the applicant. Any temporary identification card so issued shall be valid for a period not to exceed ninety (90) days or until the date of approval or denial of the application for a regular for-hire vehicle driver identification card, whichever shall occur first. The issuance of a temporary identification card hereunder shall not authorize the operation of a for-hire vehicle following the denial of the application while pending the resolution of any appeal otherwise provided for in Section 1.16 of this Ordinance. The Sheriff or the Chief Executive Officer shall establish nonrefundable filing fees to defray the costs of processing regular and temporary driver identification cards.~~

(Section 1.2 amended 7/30/2026)
(Section 1.12 amended 12/8/2022)
(Section 1.12 amended 1/20/2022)
(Section 1.12 amended 11/12/2020)
(Section 1.12 amended 10/10/2019)
(Section 1.12 amended 11/8/2018, effective 1/1/2019)
(Section 1.12 amended 12/14/2017)
(Section 1.12 amended 5/12/2016)
(Section 1.12 amended 11/15/2012)
(Section 1.12 amended 8/7/2003)
(Section 1.12 amended 11/14/2002)
(Section 1.12 amended 9/24/1998)
(Section 1.12 amended 10/30/1997)
(Section 1.12 amended 11/9/1995)

Section 1.13 - Suspension and Revocation of Permit

(a) Permits may be suspended or revoked by the Chief Executive Officer at any time in case:

(1) The Chief Executive Officer finds the permit holder's past record to be unsatisfactory with respect to satisfying the provisions of this Ordinance.

(2) The permit holder fails to comply with the applicable provisions of this Ordinance.

(3) The drivers of the for-hire vehicle or vehicles fail to act in accordance with those provisions of this Ordinance which govern driver actions. The permit holder shall have strict liability in this regard; however, this provision shall not restrict the Chief Executive Officer's ability to penalize a driver for violations of those provisions of this Ordinance which govern driver actions.

(4) The owner ceases to operate a for hire vehicle without having obtained written permission from the Chief Executive Officer.

(5) The permit holder is found to be operating a for-hire vehicle that is under inactive status.

(6) The ~~LSV or a~~ taxicab are operated at a rate of fare greater than the maximum rates of ~~-~~fare authorized by the Chief Executive Officer or posted on the taxicab ~~or LSV pursuant to Section 2.2 (a) of this Ordinance~~, unless the taxicab trip is Electronically Booked.

(7) The permit holder fails to begin operating the for-hire vehicle for which the permit is first approved within ~~ninety (90~~sixty (60) days after the approval date.

(8) The permit holder has been convicted of assault, battery, resisting arrest, solicitation of prostitution, any misdemeanor or felony involving force and violence, or any crime reasonably and rationally related to the paratransit industry or any similar business operation which bears upon the integrity or ability of the applicant or permit holder to operate a for-hire vehicle business and transport passengers, unless the date of discharge from a penal institution or the satisfactory completion of parole or probation for such conviction has elapsed.

(9) The permit holder has been convicted of a crime that would require a person to register as a sex offender under the California Penal Code. For purposes of this section, a plea or verdict of guilty, a finding of guilt by a court, a plea of nolo contendere or a forfeiture of bail shall be considered a conviction.

(b) A permit holder shall be notified in writing within 10 working days when a credible complaint has been filed with the Chief Executive Officer by a member of the public where such complaint involves the permit holder, the driver of the permitted for-hire vehicle, or the dispatch service to which the permit holder is subscribed. ~~As directed by the Chief Executive Officer, the permit holder shall investigate the complaint and report in writing to the Chief Executive Officer within 30 days the result of the investigation and any corrective action taken or proposed. Where the complainant has agreed to the sharing of their identity, the results of the investigation, findings, and actions shall be communicated to the complainant.~~

(c) ~~In the event the~~The Chief Executive Officer ~~finds a permit holder has failed to responsibly respond to notification of complaints~~ or ~~to initiate corrective action, the Chief Executive Officer~~designee shall investigate the complaint and if warranted, issue a notice of proposed adverse action to the permit holder. If the ~~circumstances~~subject of the complaint ~~or subsequent investigation so warrant~~is a lease driver, the Chief Executive Officer may ~~issue a notice of adverse action to a driver independently of or in conjunction with any adverse action proposed to the permit holder~~request the Sheriff to take disciplinary action. The Chief Executive Officer shall refer to the Administrative Penalty Guidelines in determining a proposed adverse action.

(d) The permit holder ~~or driver~~ in receipt of a notice of proposed adverse action shall be given the opportunity to appear for an informal hearing before the Chief Executive Officer or designated representative. Failure to appear will constitute waiver of the hearing. Following the hearing or waiver thereof, the Chief Executive Officer shall issue the notice of adverse action if justified by the facts. If the Chief Executive Officer determines that the performance of the permit holder or driver involves criminal activity or constitutes a serious degradation of the public safety, convenience, or necessity, a notice of adverse action may be issued and the action effected without hearing.

(e) Upon a finding by the Chief Executive Officer that a permit holder falls within the provisions of this section, the permit holder or driver shall be notified that their permit has been

subjected to an adverse action and that the matter is such that the action may be appealed. In lieu of an action provided for in the Administrative Penalty Guidelines, the Chief Executive Officer may impose a fine or a fine and a period of suspension for any violation(s) of this Ordinance.

(Section 1.13 amended 7/30/2026)
(Section 1.13 amended 3/14/2024)
(Section 1.13 amended 12/8/2022)
(Section 1.13 amended 1/20/2022)
(Section 1.13 amended 2/14/2019)
(Section 1.13 amended 11/8/2018, effective 1/1/2019)
(Section 1.13 amended 12/14/2017)
(Section 1.13 amended 10/13/2016)
(Section 1.13 amended 5/12/2016)
(Section 1.13 amended 8/7/2003)
(Section 1.13 amended 11/14/2002)
(Section 1.13 amended 6/24/1999)

Section 1.14 - ~~Suspension and Revocation~~BLANK

The text of ~~Driver's Identification Cards~~Section 1.14 is deleted in its entirety effective July 30, 2026.

~~(a) Driver's identification cards issued by the Sheriff may be suspended or revoked by the Chief Executive Officer at any time in case:~~

~~(1) The Chief Executive Officer finds the driver's past record to be unsatisfactory with respect to satisfying the provisions of this Ordinance; or~~

~~(2) The driver fails to comply with the applicable provisions of this Ordinance; or~~

~~(3) Circumstances furnish grounds for the denial, suspension, revocation or refusal to renew the driver's identification card by the Sheriff under the terms of the applicable Ordinance of the County of San Diego; or~~

~~(4) Their California Driver's License is revoked or suspended; or~~

~~(5) The driver is convicted of reckless driving or driving while under the influence of intoxicating liquors and/or narcotics; or~~

~~(6) The driver has been convicted of assault, battery, resisting arrest, solicitation of prostitution, any crime involving force and violence, or reasonably and rationally is related to the ability or integrity of the driver to operate a for-hire vehicle or transport passengers; or~~

~~(7) The driver has ever been convicted of a crime that requires registration under the California Penal Code as a sex offender.~~

~~(b) For purposes of Subsections (a) (1) through (a) (6) of this section, a plea of nolo contendere, or a forfeiture of bail shall be considered a conviction if it occurred within the five (5) years immediately preceding the date of application for a permit or identification card.~~

~~(c) Notwithstanding a driver's possession of a valid taxicab or LSV driver identification card, the Chief Executive Officer may deny, suspend, revoke, or refuse to renew the driver's privilege to operate a for-hire vehicle in the City if the driver falls within the provisions of this section.~~

~~The Chief Executive Officer shall send a notice of prohibition the date postmarked to operate a taxicab or LSV to any holder of a Sheriff's driver identification card who is ineligible under Subsection (a) to operate a for- hire vehicle within the City limits. The notice of prohibition shall be appealable in accordance with Section 1.16.~~

(Section 1.14 deleted 7/30/2026)
(Section 1.14 amended 1/20/2022)
(Section 1.14 amended 10/10/2019)
(Section 1.14 amended 5/12/2016)
(Section 1.14 amended 8/7/2003)
(Section 1.14 amended 11/14/2002)
(Section 1.14 amended 6/24/1999)

Section 1.15 - Surrender of ~~Medallion~~Permit

~~(a)~~ When a permit has been suspended or revoked, the operation of any for-hire vehicle authorized by such permit shall cease, and its ~~medallion~~Permit surrendered immediately to the Chief Executive Officer.

(Section 1.15 amended 7/30/2026)
(Section 1.15 amended 11/14/2002)

Section 1.16 - Right of Administrative Appeal from Denial, Suspension or Revocation of Permit or Related Adverse Action
~~Driver's Identification Card or Related Adverse Action~~

(a) The permit holder ~~or driver~~ shall be notified that they may file with the Chief Executive Officer a written administrative appeal ten (10) days after delivery of the notice of revocation or suspension, or the denial of a ~~license,~~ permit, ~~or driver's identification card issued by the Sheriff, the~~, or notice of prohibition to operate or the imposition of a fine. The permit holder ~~or driver~~ shall set forth in the appeal the reasons why such action is not proper.

(b) If no administrative appeal is filed within the proper time, the permit ~~or driver's identification card issued by the Sheriff~~ shall be considered revoked, suspended or denied, and shall be surrendered, the fine be imposed, as applicable, or the notice of prohibition to operate take effect.

(c) Except as provided in Subsection (d), once an administrative appeal is filed, the revocation or suspension of the permit or ~~driver's identification card issued by the Sheriff,~~ the effect of the notice of prohibition to operate, or the imposition of the fine, shall be stayed pending the final determination of the administrative appeal.

(d) If, in the Chief Executive Officer's opinion, the continued operation of a for-hire vehicle ~~or possession of a driver's identification card issued by the Sheriff~~ represents an unsafe condition for any passenger or pedestrian, the revocation or suspension of the related permit, ~~driver's identification card~~, or the effect of any notice of prohibition to operate shall not be stayed. A revocation or suspension of a permit imposed for failure to comply with Section 1.8 (g) or Section 1.9 is rebuttably presumed to represent an unsafe condition pending the determination of the appeal or the correction of the violation, whichever shall occur first. Notwithstanding, no ~~medallion~~Permit Number shall be reaffixed to a vehicle until the violation under Sections 1.8 (g) or 1.9 has been corrected.

(Section 1.16 amended 7/30/2026)
(Section 1.16 amended 1/20/2022)
(Section 1.16 amended 11/12/2020)
(Section 1.16 amended 10/10/2019)
(Section 1.16 amended 8/7/2003)
(Section 1.16 amended 11/14/2002)

Section 1.17 - Procedure Upon Administrative Appeal

(a) When an appeal is filed, the Chief Executive Officer shall review the appeal, and based on additional information provided therein, may revise the findings and penalty; in accordance with the additional information provided; or cause the appeal to be assigned to a Hearing Officer, who shall expeditiously schedule the hearing ~~before him/her~~.

(1) The Chief Executive Officer shall use California Department of General Services, Office of Administrative Hearings Administrative Law Judges as Hearing Officers. The assignment of Administrative Law Judges as Hearing Officers shall be determined by the California Department of General Services, Office of Administrative Hearings.

(2) The Hearing Officer shall be a member of the California State Bar and shall not be an MTS employee.

(b) The appellant and the Chief Executive Officer or designate shall each have the right to appear in person and be represented by legal counsel, to receive notice, to present evidence, to call and cross-examine witnesses under oath, and to present argument.

(c) An appellant may select an individual to interpret for them. MTS will not pay any costs or be held responsible for any aspect of the interpreter's ability to accurately interpret the hearing.

(1) The Hearing Officer shall have the power to compel attendance of witnesses and documents by subpoena, in accordance with state law.

(2) The formal rules of evidence need not apply, and any relevant evidence that is the sort of evidence upon which responsible persons are accustomed to rely in the conduct of serious affairs shall be admissible. Hearsay evidence may be considered by the Hearing Officer, but no findings may be based solely on hearsay evidence unless supported or corroborated by other relevant and competent evidence. The formal exceptions to the hearsay rule shall apply.

(d) The Chief Executive Officer shall promulgate supplementary rules and procedures for the conduct of the hearing, the forms of notice and proceedings, and the preparation and submission of the record.

(e) The decision of the Hearing Officer shall be the final administrative remedy and shall be binding upon the parties to the appeal.

(f) If the Hearing Officer decides to suspend or revoke a permit ~~or driver's identification card~~, the appellant shall immediately surrender the ~~medallion or driver's identification card~~Permit to the Chief Executive Officer.

(Section 1.17 amended 7/30/2026)
(Section 1.17 amended 5/12/2016)
(Section 1.17 amended 11/15/2012)

Section 1.18 - Exceptions to Provisions

(a) The provisions of this Ordinance do not apply to:

(1) a vehicle properly licensed under the jurisdiction of the California Public Utilities Commission (CPUC) unless such vehicle also provides transportation services regulated by MTS under this Ordinance;

(2) public transit vehicles owned, operated, or contracted for by MTS and operators and drivers of such vehicles;

(3) a vehicle properly licensed by the State or County as an ambulance, and its driver if properly licensed by the California Highway Patrol pursuant to Vehicle Code section 12527 (i.e. for-hire driver for an ambulance); or

(4) a vehicle properly regulated by the California Highway Patrol pursuant to Vehicle Code sections 34500 et seq. (i.e. bus, schoolbuses, school pupil activity buses, or youth buses), and its driver if properly licensed by the California Highway Patrol pursuant to Vehicle Code sections 12523.6 (i.e. for-hire driver of vehicles for developmentally disabled) or 12517.3 (i.e. for-hire driver for a schoolbus, school pupil activity bus, or youth bus).

(b) For compliance purposes, MTS inspectors may inspect all vehicles listed in Section 1.18 (a) to ensure they are not exceeding the authority granted by their license or operating as unlicensed private- hire transportation provider.

(Section 1.18 amended 10/10/2019)
(Section 1.18 amended 12/14/2017)
(Section 1.18 amended 5/12/2016)
(Section 1.18 amended 11/15/2012)
(Section renumbered to 1.18 9/24/1998)
(Section 1.17 amended 1/12/1995)
(Section 1.17 amended 6/24/1993)

Section 1.19 - Chief Executive Officer's Authority to Adopt Rules and Promulgate a Schedule of Fines

~~(a)~~ Except where Board action is specifically required in this Ordinance, the Chief Executive Officer may adopt any rules and regulations reasonable and necessary to implement the provisions of this Ordinance. The Chief Executive Officer shall promulgate a schedule of administrative fines and penalties for violations of this Ordinance in lieu of the revocation or suspension of a permit ~~or identification card issued by the Sheriff~~, a copy of which schedule shall be ~~filed with~~available on the ~~Clerk of the Board~~MTS website.

(Section 1.19 amended 7/30/2026)
(Section 1.19 amended 10/10/2019)
(Section renumbered to 1.19 9/24/1998)

Section 1.20 - Americans with Disabilities Act

(a) Permit holders, vehicles, and drivers are required to comply with the requirements of the federal Americans with Disabilities Act (ADA), and ADA regulations are hereby incorporated into MTS Ordinance No. 11 by reference. A violation of ADA requirements is a violation of this Ordinance and subject to a fine or suspension or revocation or a combination.

(Section renumbered to 1.20 9/24/1998)
(Section 1.19(a) was added 4/10/1997)

SECTION 2.0 - TAXICABS AND/OR LSVs

Section 2.1 - Types of Service

(a) A taxicab or LSV is authorized to provide exclusive ride and group ride service.

(Section 2.0 and 2.1 amended 8/7/2003)

Section 2.2 - Rates of Fare

(a) After a noticed and open public hearing of the Taxicab Advisory Committee, MTS shall establish a maximum rate of fare for exclusive ride and group ride hire of taxicabs ~~and/or LSVs~~. A permit holder may petition the Board for any desired change in the maximum taxicab ~~or LSV~~ rates for exclusive ride ~~and/or zone rates~~ and group ride hire.

(b) Rates for trips originating at the airport may include an extra charge equal to the Airport Access Fee assessed against the individual taxicab operator by the San Diego County Regional Airport Authority. The extra may not be charged on any trip that does not originate at the airport or on any trip where the taxicab operator does not pay the fee to the San Diego County Regional Airport Authority. The extra charge may only be charged to the passenger by visually identifying the Airport Access Fee on the taxicab meter. A driver may not verbally request payment. All taxicabs utilizing the Airport Access Fee must have a decal, approved by the Chief Executive Officer and the County of San Diego Office of Weights and Measures. The decal shall identify and accurately describe the extra charge consistent with regulatory requirements.

(c) All taxicabs shall accept major credit cards including~~,~~ but not limited to, contactless payment methods, VISA, MasterCard, American Express, and Discover. Credit Card fees shall not be passed onto passengers.

(d) In accordance with Government Code Section 53075.5, the taxicab permit holder or taxicab driver shall disclose fares, fees or rates to the passenger. If providing trips booked through an online enabled application, internet website, or dispatch service, it may be disclosed by website, mobile telephone application or telephone dispatch requests. If providing trips through walkup rides or street hails, it may be disclosed on the exterior of the vehicle, internet enabled application, or be clearly visible in either print or electronic form inside the taxicab.

(1) If a trip was Electronically Booked, notice that maximum rates do not apply for trips Electronically Booked must be conspicuously posted wherever maximum rates of fare are disclosed or posted.

(e) It shall be unlawful for a permit holder or driver to operate any taxicab in the City or County, unless the vehicle is equipped with a Taximeter that meets the requirements of the State of California.

(1) If Hard Meter, each taxicab permit holder shall have the Taximeter set by properly licensed personnel for the rate that they will charge and have the Taximeter sealed and inspected.

(2) If Soft Meter, a certificate of approval must be provided by the California Department of Food and Agriculture Division of Measurement Standards or National Conference of Weights and Measures.

(3) The Taximeter shall calculate fares upon the basis of a combination of mileage traveled and time elapsed. When operative with respect to fare indication, the fare-indicating mechanism shall be actuated by the mileage mechanism whenever the vehicle is in motion at such a speed that the rate of mileage revenue equals or exceeds the time rate, and may be actuated by the time mechanism whenever the vehicle speed is less than this, and when the vehicle is not in motion.

(4) Waiting time shall include all time when a taxicab occupied or engaged by a passenger is not in motion or is traveling at a speed which is slow enough for the time rate to exceed the mileage rate. Waiting time will also include the time consumed while standing at the direction of the passenger or person who has engaged the taxicab.

(5) It shall be the duty of every permit holder operating a taxicab to keep the Taximeter in proper condition so that the Taximeter will, at all times, correctly and accurately indicate the charge for the distance traveled and waiting time. The Taximeter shall be at all times subject to the charge for the distance traveled and waiting time.

(6) The Taximeter shall be at all times subject to inspection by an MTS inspector or any peace officer. The MTS inspector or peace officer is hereby authorized at their instance or upon complaint of any person to investigate or cause to be investigated the Taximeter, and upon discovery of any inaccuracy in the Taximeter, or if the Taximeter is unsealed, to remove or cause to be removed the vehicle equipped with this taximeter from the streets of the City until the Taximeter has been correctly adjusted and sealed. Before being returned to service, the vehicle and Taximeter must be inspected and approved by the Chief Executive Officer.

(7) Any device repairperson who places into service, repairs, or recalibrates a Taximeter shall record the tire size and pressure of the drive wheels of that vehicle, as tested, on the repair person's sticker.

(8) It shall be the duty of the permit holder to ensure the proper device repair person's sticker is affixed to the Taximeter and to ensure the tires are the proper size.

(f) It shall be unlawful for any driver of a taxicab, while carrying exclusive or group ride passengers, to display the flag or device attached to the Taximeter in such a position as to denote that the vehicle is for hire, or is not employed, or to have the flag or other attached device in such a position as to prevent the Taximeter from operating. It shall be unlawful for any driver to throw the flag into a position which causes the Taximeter to record when the vehicle is not actually employed, or to fail to throw the flag or other device into non-recording position at the termination of each and every service.

(g) The Taximeter shall be so placed in the taxicab that the reading dial showing the amount of fare to be charged shall be well-lighted and easily readable by the passenger riding in such taxicab.

(h) It shall be unlawful for any permit holder and/or driver of a taxicab ~~or LSV~~ to demand of a passenger a charge for hire which is greater than the current maximum rate ~~approved by the Board~~, as per MTS Board Policy No. 34 and as established pursuant to Section 2.2 (a) or (b) of this Ordinance, unless the taxicab trip is Electronically Booked.

(i) It shall be unlawful for any permit holder and/or driver to demand of a passenger that is requesting a taxicab trip through a walkup, street hail or phone call to a dispatch service organization a charge for hire which is greater than the authorized maximum rate pursuant to Section 2.2 (a) or (b) of this Ordinance. It shall also be unlawful for any dispatch service organization, permit holder and/or driver to request or demand that a passenger requesting a taxicab trip through a walkup or street hail or phone call to a dispatch service organization to instead have the taxicab trip Electronically Booked.

(j) Nothing in this Ordinance shall preclude a dispatch service, permit holder, or driver from agreeing with prospective passenger(s) to a rate of fare which is equal to or less than the maximum rates of fare if the agreement is entered into in advance of the passenger(s) hiring the taxicab for the trip. To ensure the fare agreement is equal to or less than the maximum rates of fare, the taximeter shall remain in recording position until the termination of the trip.

(Section 2.2 amended 7/30/2026)
(Section 2.2 amended 3/14/2024)
(Section 2.2 amended 1/20/2022)
(Section 2.2 amended 12/12/2019)
(Section 2.2 amended 11/8/2018, effective 1/1/2019)
(Section 2.2 amended 12/14/2017)
(Section 2.2 amended 5/12/2016)
(Section 2.2(c)(2) amended 11/15/2012)
(Section 2.2(b) amended 4/19/2012)
(Section 2.2 amended 8/7/2003)
(Section 2.2 amended 5/8/2003)
(Section 2.2 amended 11/14/2002)
(Section 2.2 amended 6/24/1999)
(Section 2.2 amended 9/24/1998; Section 2.2c operative May 1, 1999)
(Section 2.2 amended 10/30/1997)
(Section 2.2 amended 4/10/1997)

Section 2.3 - Equipment and Specifications

(a) No taxicab shall be operated until the taximeter thereon has been inspected, tested, approved and sealed, if applicable, by an authorized representative of the State of California, and thereafter so maintained in a manner satisfactory to the Chief Executive Officer.

(b) Each taxicab may be equipped with a device which plainly indicates to a person outside the taxicab whether the taximeter is in operation or is not in operation.

(c) Mandatory Exterior Markings: The permit holder must display one of the following exterior markings schemes on each taxicab:

(1) Exterior Marking Scheme 1: The following must be displayed if in use of Exterior Marking Scheme 1:

(A) The permit holder's trade name shall be painted or permanently affixed in letters and numerals four (4) inches high all on one line on the upper third part of both rear doors or both rear quarter panels utilizing "Univers" or other Chief Executive Officer pre-approved font in any solid color lettering to produce maximum contrast adequately spaced for maximum readability. In the event the trade name does not fit on one line utilizing four (4) inch lettering, the trade name lettering must be as large as possible, up to four (4) inches in height, to enable the trade name to fit on one line.

(B) The ~~medallion number~~Permit Number shall be painted or permanently affixed, on both rear doors or both rear quarter panels, one (1) inch below the permit holder's trade name, six (6) inches high, utilizing "Univers" or other Chief Executive Officer pre-approved font in any solid color lettering to produce maximum contrast adequately spaced for maximum readability.

(2) Exterior Marking Scheme 2: The following must be displayed if in use of Exterior Marking Scheme 2:

(A) The permit holder's trade name shall be painted or permanently affixed in letters and numerals four (4) inches high all on one line on the upper third part of both front doors utilizing "Univers" or other Chief Executive Officer pre-approved font in any solid color lettering to produce maximum contrast adequately spaced for maximum readability. In the event the trade name does not fit on one line utilizing four (4) inch lettering, the trade name lettering must be as large as possible, up to four (4) inches in height, to enable the trade name to fit on one line.

(B) The ~~medallion number~~Permit Number shall be painted or permanently affixed, on both front doors, one (1) inch below the permit holder's trade name, six (6) inches high, utilizing "Univers" or other Chief Executive Officer pre-approved font in black or white lettering to produce maximum contrast adequately spaced for maximum readability.

(C) The permit holder's trade name and ~~medallion number~~Permit Number shall be painted or permanently affixed on the rear of the taxicab, four (4) inches high, utilizing "Univers" or other Chief Executive Officer pre-approved font in black or white lettering to produce maximum contrast adequately spaced for maximum readability. In the event the rear of the vehicle does not have four inches of vertical space for the trade name and ~~medallion number~~Permit Number, the rear lettering may be less than four inches, provided that it is easily readable from a distance of 50 feet.

(3) Exterior Marking Scheme 3: Shall only apply to taxicab vehicles with an unladen weight of 6,000 pounds or less. The following must be displayed if in use of Exterior Marking Scheme 3~~:~~:

(A) The permit holder's trade name shall be permanently affixed to the upper edge of the front and rear windshields and lower part of both left and right rear windows, three (3) inches high, utilizing "Univers" or other Chief Executive Officer pre-approved font in any solid color to produce maximum contrast adequately spaced for maximum readability.

(B) The ~~medallion number~~Permit Number shall be permanently affixed on the upper right side of the front windshield, upper left part of the rear windshield, and

both right and left rear glass panels. The ~~Medallion number~~Permit Number shall be a minimum of (4) inches high utilizing "Univers" or other Chief Executive Officer pre-approved font any in any solid color to produce maximum contrast adequately spaced for maximum readability.

(d) Optional Exterior Vehicle Markings. The permit holder has the option of choosing to post any combination of the below-listed five options on their taxicab which must be posted only at the specific location and in the size noted.

(1) Trade Name Logo. If the permit holder chooses to display their trade name logo, the trade name logo shall be posted on the rear portion of both side rear quarter panels or bottom parts of the front or rear windshields farthest removed from the driver. The logo shall not exceed (6) six inches in diameter.

(2) Dispatch Service Provider. If the permit holder chooses to display the dispatch service provider name or logo, the dispatch service provider name or logo cannot utilize the words "cab" or taxi." The dispatch service provider name or logo must be displayed only on the rear portion of both side rear quarter panels.

(3) Dispatch Service Telephone Number. If permit holder chooses to display the dispatch service telephone number, the telephone number must be no more than three (3) inches in height and posted on the top front portion of both front side quarter panels or lower part of left and right rear windows

(4) "Driver Carries Only $ Change". If the permit holder chooses to post "Driver Carries only $_____Change", postings must be located only on rear quarter panels near the rear door but clear of the rates of fare.

(5) "Leased to Driver". If permit holder chooses to post "Leased to Driver," it must be posted only on both side rear quarter panels near the rear door but clear of the rate of fares in lettering no larger than 1 inch.

(6) Body Numbers. If the permit holder chooses to post an internally assigned body number, different from the ~~medallion number~~Permit Number, the body number shall be posted in one (1) inch numerals on the front and rear bumpers.

(e) All other exterior vehicle markings are prohibited unless they are directly related to the permit holder's business and pre-approved by the Chief Executive Officer.

(f) All taxicabs shall be equipped and operated so that they may be dispatched by two-way radio or two-way electronic communication, monitored by a dispatcher, in response to a telephone or other request for service by a prospective passenger.

(1) Means of dispatch device must be turned on, and audible to driver, at all times the taxicab is in service.

(2) Dispatch equipment, such as a ~~two-way radio~~, cellular phone or tablet, shall be securely mounted within the vehicle in such a way to be visible to peace officers and MTS inspectors and allow for hands-free operation while the vehicle is in motion.

~~(g) If radio dispatch capability is utilized, the dispatch service must abide by the following: the radio dispatch capability described in paragraph (d) of this section must be provided so as to conform to the regulations of the Federal Communications Commission (FCC) pertaining to~~

~~Land Transportation Radio Services. Failure to conform to these regulations will additionally constitute a failure to meet the requirements of this section.~~

~~(1) The current valid FCC license shall be on file with MTS.~~

~~(2~~(g) Taxicab permit holder shall provide current proof the ~~radio or~~ electronic device has passed inspection by an MTS-approved inspector.

~~(3) Taxicab radios shall have the capability to receive or transmit only on frequencies specified in the FCC license of the radio service subscribed to by the permit holder.~~

(h) Each permit holder shall equip each permitted taxicab with a device capable of electronically processing credit card transactions~~.~~ including contactless payment methods. The device must be visible to all passengers and must allow the passenger to operate the payment device independently of the driver, without having to hand the credit card to the driver. The device must be fully operational at all times. The permit holder dispatch service, or driver shall be the merchant of record associated with the device. Any means of electronic credit card acceptance is acceptable so long as it complies with the provisions set forth in Section 1.8 (s).

(Section 2.3 amended 7/30/2026)
(Section 2.3 amended 1/20/2022)
(Section 2.3 amended 11/12/2020)
(Section 2.3 amended 1212/2019)
(Section 2.3 amended 11/8/2018, effective 1/1/2019)
(Section 2.3 amended 12/14/2017)
(Section 2.3 amended 10/13/2016)
(Section 2.3 amended 5/12/2016)
(Section 2.3 amended 2/12/2015)
(Section 2.3 amended 11/15/2012)
(Section 2.3 amended 6/27/2002)
(Section 2.3 amended 9/24/1998; Section 2.3c operative May 1, 1999)
(Section 2.3 amended 6/27/1991; effective 7/27/1991)
(Section 2.3 amended 4/10/1997)

Section 2.4 - Operating Regulations

(a) Operating regulations shall be promulgated and adopted from time to time by resolution of the Board. These resolutions will have the force of law and will be published and processed as though set forth in this Ordinance.

(b) Any driver employed to transport passengers to a definite point shall take the most direct route possible that will carry the passenger to the destination safely and expeditiously.

(c) A failure of the driver of any taxicab or LSV to assist a passenger with the loading or unloading of a reasonable size, number, and kind of passenger luggage or other items, when requested to do so, shall be specifically defined as a violation of this section.

(1) A driver is not required to lift any single piece of passenger luggage or other item that exceeds 25 pounds in weight. The requirement for loading or unloading assistance shall be limited to retrieval from or deposit onto the nearest curbside adjacent to the legally parked taxicab or LSV. A sign in the form of a transparent decal may be affixed to the rear-door, side window stating that, “DRIVER IS NOT REQUIRED TO LOAD LUGGAGE IN

EXCESS OF 25 POUNDS PER ITEM OR OF A SIZE OR KIND THAT WILL NOT SAFELY FIT IN THE DESIGNATED LUGGAGE AREA OF THIS VEHICLE."

(2) A driver with a disability that prevents them from handling items as defined in subsection (1) above must receive prior approval from MTS and provide supporting documentation of such a disability. After receiving MTS approval, a driver may affix a small sign either in the passenger section of the vehicle to be clearly visible to a rear seat passenger or on the inside of the trunk cover lid stating that, "DRIVER HAS DISABILITY THAT PREVENTS HANDLING OF LUGGAGE."

(d) No driver of any taxicab or LSV shall stop, park, or otherwise leave standing a taxicab or LSV on the same side of the street in any block in which taxicabs or LSVs are already stopped, parked, or otherwise standing except the taxicab or LSV may actively unload in a passenger loading zone or be parked in a marked taxi/LSV stand.

(e) No driver shall stop, park or otherwise leave standing a taxicab or LSV within one-hundred (100) feet of any other taxicab or LSV except in a marked taxi/LSV stand or while actively loading or unloading passengers.

(f) An out-of-service sign must be displayed when the taxicab or LSV is not available for hire and is being operated or is lawfully parked for purposes of maintenance, inspection, or personal use. The sign must be placed in a location in the vehicle that is clearly visible from the exterior of the vehicle. The sign must be of durable material and written in block letters in black ink and easily readable from a distance of not less than ten (10) feet.

(g) A taxicab driver may seek passengers by driving through any public street or place without stops, other than those due to obstruction of traffic, and at such speed as not to interfere with or impede traffic.

(h) It shall be unlawful, however, for the driver to seek passengers by stopping at or driving slowly in the vicinity of an entertainment center or transportation center or any other location of public gathering, in such a manner as to interfere with public access to or departure from that center or location, or so as to interfere with or impede traffic.

(i) It shall also be unlawful for a taxicab or LSV driver, having parked and left their taxicab or LSV, to solicit patronage among pedestrians on the sidewalk, or at any entertainment center, transportation center, or other location of public gathering.

(j) No person shall solicit passengers for a taxicab or LSV other than the driver thereof; however, the Chief Executive Officer may authorize a dispatcher to solicit passengers and assist in loading passengers at such times and places as, in their discretion, public service and traffic conditions require.

(k) It shall be unlawful for the driver or operator of any taxicab or LSV to remain standing in any established taxicab or LSV stand or passenger loading zone, unless the driver or operator remains within twelve (12) feet of their taxicab or LSV, except when the driver or operator is actually engaged in assisting passengers to load or unload.

(l) Only paying passengers and persons specifically authorized by the Chief Executive Officer may occupy a taxicab or LSV that is already occupied by a paying passenger. No driver, once a paying passenger has occupied the taxicab or LSV, shall permit any other nonpaying passenger to occupy or ride in the taxicab or LSV.

(m) It shall be unlawful to respond to a call for service dispatched to another operator except when an LSV refers service to another operator because the trip distance is outside of the approved area of jurisdiction.

(n) The taxicab or LSV driver shall maintain a daily trip log which shall be available for inspection upon request by any peace officer or MTS inspector. The trip log will accurately show the driver's name, taxicab or LSV number, date, time, beginning odometer reading, starting and ending locations, type of service provided, and fare paid for each trip provided.

(1) The daily trip log shall consist, at a minimum, of a five- by seven-inch paper form retained on a stiff-board writing surface with ruled lines and columns sufficient to contain the required information. All entries will be in black or dark blue ink, block letters, and be clearly legible. Colored paper that is lightly shaded is allowed provided there is sufficient contrast for entries to be easily read. Onboard electronically generated reports that meet the legibility requirements are acceptable.

(2) The driver shall deliver trip logs to the permit holder upon request or at a weekly interval, whichever is less.

(3) If a taxicab, the trip log shall be retained for at least 18 months.

(o) All operating regulations set forth in Section 1.8 apply.

(Section 2.4 amended 3/14/2024)
(Section 2.4 amended 1/20/2022)
(Section 2.4 amended 11/8/2018, effective 1/1/2019)
(Section 2.4 amended 12/14/2017)
(Section 2.4 amended 10/13/2016)
(Section 2.4 amended 5/12/2016)
(Section 2.4 amended 2/12/2015)
(Section 2.4 amended 11/15/2012)
(Section 2.4 amended 8/7/2003)
(Section 2.4 amended 11/14/2002)
(Section 2.4 amended 6/24/1999)
(Section 2.4 amended 2/13/1997)
(Section 2.4 amended 6/27/1991; effective 7/27/1991)

Section 2.5 - Stands

(a) The Chief Executive Officer may establish, locate and designate shared use taxicab/LSV stands for one or more taxicabs/LSVs, which stands when so established shall be appropriately designated "Taxis/LSVs Only." The operating regulations of this Ordinance shall apply to such stands and to taxicab/LSV stands established by the San Diego Unified Port District in areas under its jurisdiction within the City.

(b) Each taxicab or LSV stand established hereunder may be in operation twenty-four (24) hours of every day, unless otherwise specified by the Chief Executive Officer.

(c) Any individual, partnership, association, or other organization may petition MTS requesting that a new taxicab/LSV stand be established, or that the location of an existing taxicab/LSV stand be changed to another location. ~~A nonrefundable filing fee to be determined by the Chief Executive Officer must be paid at the time the petition is submitted.~~

(d) It shall be unlawful for a vehicle other than a taxicab or LSV with a proper MTS taxicab or LSV permit to occupy a taxi/LSV stand.

(e) LSVs may only occupy taxicab stands that are specially signed, designated their approved use.

(Section 2.5 amended 7/30/2026)
(Section 2.5 amended 11/15/2012)
(Section 2.5 amended 8/7/2003)

Section 2.6 - Dispatch Services

(a) In order to provide taxicab dispatch service required by Section 2.3(g, h), the dispatch service organization adding or changing subscribers, shall establish and conform to written policies and procedures concerning the following:

(1) Standard time elapse for answering the telephone service-request line(s).

(2) Standard time elapse for the taxicab's arrival at requested pick-up location.

(3) Passenger's request for a specific driver ("personals").

(4) Additional two-way communication devices (mobile or cellular phones) in taxicabs

(5) Lost and found for passengers' items.

~~()~~

(6) Immediately notify the permit holder of all lost items and inquiries.

Current written policies and procedures shall be available to subscribers from the dispatch organization, and on file with MTS.

(b) Dispatch service organizations shall, be able to receive and respond to service requests or other operational questions 24 hours a day as further described at Section 2.6 (c), have staff on duty for lost and found pick-ups and drop offs during reasonable hours or by appointment, at a preapproved physical commercial business location, answer telephone-request line(s), properly dispatch those requests to all members, ~~provide radio response to all licensed radio frequencies/channels,~~ and respond to direct requests from drivers, permit holders, and MTS as well as law enforcement and local regulatory agencies.

(c) A dispatch service organization shall maintain compliance with the 24 hour operation requirement though a live person answering phone calls, automated voice recognition technology so long as it provides the option to connect to a live person, or by forwarding trip requests to a different dispatch service organization that provides 24 hour operations.

(d) A dispatch service organization shall utilize a transportation or fleet management specialized computerized system designed to automate the flow of information between a dispatch service organization and driver that at a minimum electronically records: trip information (i.e. address or location description) of both start and end locations; the route taken; and the up-front price if Electronically Booked.

(e) A dispatch service organization shall at all times have the ability to provide in real time, the GPS location of every taxicab while the taxicab is in service. It shall be the responsibility of the dispatch service organization to provide the GPS tracking method through a computerized dispatch software or other similar technology.

(f) Dispatch services shall keep electronic or written records of all requests for taxi service, calls dispatched, the time(s) each taxicab goes in and out of service, and final fare for all trips. Final fare may be calculated by Dispatch services through trip data. These records shall be kept on file for a minimum of six (6) months, and made available to MTS, upon request.

(g) No person, partnership, corporation, association, other organization providing ~~radio or other~~ dispatch ~~service~~services shall dispatch a request for service to a driver, owner, or vehicle unless the driver, owner, and vehicle are properly ~~licensed~~permitted to provide the service requested.

~~(h~~(h) Dispatch services shall not refuse or discourage a prospective or actual fare based on trip purpose (e.g. transport food or who must meet a medical appointment).

(i) The Chief Executive Officer may, at any time, revoke or suspend the taxicab dispatch privileges of or fine any person, partnership, corporation, association, other organization providing ~~radio or other~~ dispatch service that violates a provision of this ordinance.

(Section 2.6 amended 7/30/2026)
(Section 2.6 amended 3/14/2024)
(Section 2.6 amended 11/12/2020)
(Section 2.6 amended 11/8/2018, effective 1/1/2019)
(Section 2.6 amended 12/14/2017)
(Section 2.6 amended 10/13/2016)
(Section 2.6 amended 11/15/2012)
(Section 2.6 amended 8/7/2003)
(Section 2.6 amended 9/24/1998)
(Section 2.6 added 6/27/1991; effective 7/27/1991)

Section 2.7 - Driver Safety Requirements

(a) No taxicab vehicle shall be operated unless such vehicle is equipped with an emergency signaling or any other emergency electronic communication device approved by the Chief Executive Officer.

(b) No taxicab vehicle may be operated with window tinting, shades, or markings that could interfere with a clear view of the cab interior from the outside, unless equipped by the vehicle manufacturer and approved by an MTS inspector.

(c) Taxicab dispatch services required by Section 2.3 shall at all times have a dispatch staff person on duty who has successfully completed a driver safety training course approved by the Chief Executive Officer.

(d) The use of a cellular phone or other similar electronic device by drivers is prohibited at all times when the vehicle is in motion. Otherwise, California Vehicle Code rules apply.

(Section 2.7 amended 11/12/2020)

(Section 2.7 amended 11/8/2018, effective 1/1/2019)
(Section 2.7 amended 12/14/2017)
(Section 2.7 amended 10/13/2016)
(Section 2.7 amended 5/12/2016)
(Section 2.7 amended 11/15/2012)
(Section 2.7 amended 8/7/2003)
(Section 2.7 added 9/24/1998)

Section 2.8 – Prearranged Trips by Taxicabs

(a) A Prearranged Trip shall mean a trip using an online enabled application, dispatch or Internet Web site.

(b) A MTS taxicab permit holder may provide Prearranged Trips anywhere within San Diego County.

(c) A taxicab not permitted by MTS, but permitted by another authorized agency within San Diego County, may provide Prearranged Trips within City or County. MTS will not require such a taxicab to apply for a permit with MTS if the taxicab is not Substantially Located in City or County. MTS will require such a taxicab to comply with mechanical safety regulations within Section 1.8 (g) as a public health, safety and welfare measure.

(Section 2.8 amended 11/12/2020)
(Section 2.8 amended 2/14/2019)
(Section 2.8 added 11/8/2018, effective 1/1/2019)

SECTION 3.0 - CHARTER VEHICLES

Section 3.1 - Rates of Fare

~~(a) Within thirty (30) calendar days following the issuance of a permit by the Chief Executive Officer, each permit holder shall file a document with the Chief Executive Officer reflecting the rates of fare being charged by said permit holder for charter services.~~

~~(b) If a permit holder desires to change the rates of fare being charged for charter services during any calendar year, they shall first file a document with the Chief Executive Officer indicating said changes, and no change shall be effective until fourteen (14) days following the filing of said change.~~

~~(c) No permit holder shall charge any~~ The rate of fare ~~for charter services unless said rates are on file with the Chief Executive Officer as aforesaid, and duly displayed.~~ may

~~(d) The rates of fare shall~~ be established on a per capita plus per mile basis or by a prearranged written contract on a per-mile or per-hour basis.

(Section 3.1 amended 7/30/2026)
(Section 3.1 amended 1/20/2022)
(Section 3.1 amended 4/10/1997)

Section 3.2 - Operating Regulations

(a) It shall be unlawful for any charter vehicle to remain standing on any public street in the City, except such reasonable time necessary when enabling passengers to load or unload.

(b) It shall be unlawful for any person, either as owner, driver, or agent, to approach and solicit patronage upon the streets, sidewalks, in any theater, hall, hotel, public resort, railway or airport, or light rail transit station.

(c) The charter for-hire vehicle driver shall maintain a daily trip log which shall be available for inspection upon request by any peace officer or MTS inspector. The trip log will accurately show the driver's name and the ~~medallion number~~Permit Number on the vehicle. In addition, the trip log shall identify the scheduling parties by name, date, and time of the prearranged hire. If the trip is medical in nature, the passenger's name may be omitted.

(d) All other operating regulations defined in Section 1.8 apply.

(Section 3.2 amended 7/30/2026)
(Section 3.2 amended 12/14/2017)
(Section 3.2 amended 11/14/2002)

SECTION 4.0 - SIGHTSEEING VEHICLES

Section 4.1 - Rates of Fare

~~(a) Within thirty (30) calendar days following the issuance of a permit by the Chief Executive Officer, each permit holder shall file a document with the Chief Executive Officer reflecting the rates of fare being charged by said permit holder of sightseeing vehicle services.~~

~~(b) If a permit holder desires to change the rates of fare being charged for sightseeing services during any calendar year, the permit holder shall first file a document with the Chief Executive Officer indicating said changes, and no change shall be effective until fourteen (14) days following the filing of said changes.~~

~~(c~~(a) No permit holder shall charge any rate of fare for sightseeing services unless said rates are ~~on file with the Chief Executive Officer as aforesaid, and duly~~clearly and conspicuously displayed.

(~~d~~b) The rate of fare shall be established on a per capita or per event basis.

(Section 4.1 amended 7/30/2026)
(Section 4.1 amended 11/8/2018, effective 1/1/2019)
(Section 4.1 amended 4/10/1997)

Section 4.2 - Operating Regulations

(a) It shall be unlawful for any sightseeing vehicle to remain standing on any public street in the City, except such reasonable time necessary when enabling passengers to load or unload.

(b) It shall be unlawful for any person, either as owner, driver, or agent, to approach and solicit patronage upon the streets, sidewalks, in any theater, hall, hotel, public resort, railway or airport, or light rail transit station.

(c) All other operating regulations defined in Section 1.8 apply, except Section 1.8 (x).

(Section 5.0 amended 11/12/2020)

SECTION 5.0 - NONEMERGENCY MEDICAL VEHICLES

Section 5.1 - Rates of Fare

~~(a) Within thirty (30) calendar days following the issuance of a permit by the Chief Executive Officer, each permit holder shall file a document with the Chief Executive Officer reflecting the rates of fare being charged by said permit holder for nonemergency medical vehicle services.~~

~~(b) If a permit holder desires to change the rates of fare being charged for nonemergency medical vehicle services during any calendar year, they shall first file a document with the Chief Executive Officer indicating said changes, and no change shall be effective until fourteen (14) days following the filing of said change.~~

~~(c) No permit holder shall charge any rate of fare for nonemergency medical vehicle services unless said rates are on file with the Chief Executive Officer as aforesaid.~~

~~(d)~~ The rate of fare ~~for exclusive ride service shall~~may be established on a per capita plus per mile basis~~.~~

~~(e) The rates of fare for shared ride service shall be established~~ or by a prearranged written contract on a per ~~capita plus per~~ -mile or per-hour basis~~, or on a per capita plus per zone basis.~~.

(Section 5.1 amended 7/30/2026)
(Section 5.1 amended 1/20/2022)
(Section 5.1 amended 12/14/2017)
(Section 5.1 amended 4/10/1997)

Section 5.2 - Operating and Equipment Regulations

(a) It shall be unlawful for any nonemergency medical vehicle to remain standing on any public street in the City, except when enabling passengers to load or unload.

(b) All other operating regulations defined in Section 1.8 apply.

(c) Special equipment on a nonemergency medical vehicle shall, at all times the vehicle is in operation, be in proper working order. Such vehicles equipped with wheelchair ramps or lifts shall have proper device(s) to secure each wheelchair on board.

~~(d~~(d) Gurney Vans are nonemergency medical vehicles. A Gurney Van is a vehicle that is specially constructed, modified, or equipped and/or used to transport patients who cannot travel in an upright, sitting position, and for whom the need for any medical care, treatment, or procedure other than pre-established devices solely maintained by the patient is not required, likely, or foreseeable. If a Gurney Van:

(1) Each vehicle shall have appropriately installed passenger gurney seatbelts.

(2) Each vehicle shall have the appropriate number of floor-mounted approved gurney retention mechanisms.

(3) Each vehicle shall be equipped with an appropriate supply of single-use gurney linens.

(4) Each vehicle shall be equipped with at least one (1) gurney compliant with current local, state, industry, and federal standards, and must be maintained in clean condition and good working order.

(e) Nonemergency medical vehicles shall not provide transportation when any passenger's medical care, treatment, or procedures, other than pre-established devices solely maintained by the patient, are required, likely, or foreseeable.

(f) Nonemergency medical vehicles shall not enter a hospital emergency department through the ambulance bay, ambulance-only doors, or other entry points without a hospital staff escort.

(g) The permit holder is responsible for ensuring that the driver of a nonemergency medical vehicle is properly trained:

(1) in the use of any of the vehicle's special equipment;

(2) concerning supervision of or assistance to the disabled passengers whom the driver is to transport.

(h) Each non-emergency medical vehicle shall contain:

(1) A fire extinguisher of the dry chemical or carbon dioxide type with an aggregate rating of at least 5 B/C units and a current inspection card affixed to it.

(2) A minimum of three (3) red emergency reflectors.

(3) A first-aid kit containing medical items to adequately attend to minor medical problems.

(4) Seatbelts for all seats used by ambulatory clients.

(5) Equipment necessary to comply with California Occupational Safety and Health Administration (Cal OSHA) standards for exposure to blood borne and airborne pathogens.

(Section 5.2 amended 7/30/2026)
(Section 5.2 amended 6/22/1995)
(Section 5.2 amended 6/24/1993)

Section 5.3 - Driver and Driver Assistant Identification Cards and Training

In addition to the requirements set forth in Section 1.12, nonemergency medical vehicle ~~drivers~~Drivers and Driver Assistants shall acquire and maintain valid proof of proper first-aid and cardiopulmonary resuscitation (CPR) training. Driver Assistant shall mean every person employed by, or acting as an agent of the Non-Emergency Medical Vehicle Permit Holder who travels inside

the for-hire vehicle for the purpose of assisting with all aspects of operation of the vehicle and safety of the passenger.

(Section 5.3 amended 7/30/2026)
(Section 5.3 added 6/24/1993)

SECTION 6.0 - JITNEY VEHICLES

Section 6.1 - Rates of Fare

~~(a) Within thirty (30) calendar days following the issuance of a permit by the Chief Executive Officer, each permit holder shall file a document with the Chief Executive Officer reflecting the rates of fare being charged by said permit holder for jitney services.~~

~~(b) If a permit holder desires to change the rates of fare being charged for jitney services during any calendar year, they shall first file a document with the Chief Executive Officer indicating said changes, and no change shall be effective until fourteen (14) days following the filing of said change.~~

~~(c~~(a) No permit holder shall charge any rate of fare for jitney services unless said rates are ~~on file with the Chief Executive Officer and duly~~clearly and conspicuously displayed.

(~~d~~b) The rates of fare shall be established on a per capita basis.

(Section 6.1 amended 7/30/2026)
(Section 6.1 amended 1/20/2022)
(Section 6.1 amended 11/8/2018, effective 1/1/2019)
(Section 6.1 amended 4/10/1997)

Section 6.2 - Jitney Routes

(a) A permit holder who wishes to provide a fixed route service shall apply to the Chief Executive Officer for authorization to serve a defined route with a specific vehicle. No for-hire vehicle may be operated as a jitney until it has met all other requirements of this Ordinance and has been approved for service on a specific fixed route. A jitney may be authorized to serve more than one route; however, a jitney may provide fixed route service on only those routes which the Chief Executive Officer has approved in writing for that vehicle.

(b) The application for a fixed route shall be in writing and shall contain the following information:

(1) A description of the vehicle(s) which will be utilizing the route;

(2) A detailed written description of the route, to include starting location, ending location, and the street name and direction of travel for all streets to be used in the route;

(3) A map in sufficient detail to clearly indicate the proposed route;

(4) The fare to be charged; and

(5) Such other information as the Chief Executive Officer may, in their discretion, require.

(c) Upon approval of a fixed route by the Chief Executive Officer, the permit holder shall display a representation of the route, the fare, and the permit holder's trade name on each side of the vehicle in letters large enough to be easily read by potential customers in accordance with the standards established by the Chief Executive Officer under Section 6.5 of this Ordinance. Only one (1) route may be displayed on a vehicle at any time.

(d) If a permit holder wishes to alter their approved fixed route(s), they must apply in writing to the Chief Executive Officer, submitting the information required in Section 6.2 (b).

(e) The Chief Executive Officer may, in their discretion, place conditions on the approval of fixed routes.

(f) The Chief Executive Officer may change a route that has been approved previously when the Chief Executive Officer finds it necessary to do so. A change of route may be necessary when a street has been closed temporarily or permanently because of construction, or the direction of a street has been changed, or a street has been vacated, or for similar reasons as determined by the Chief Executive Officer. The Chief Executive Officer shall notify in writing any permit holder whose route has been changed. ~~The Chief Executive Officer's change of a route is subject to appeal under Section 1.16 of this Ordinance.~~

(g) Except as provided for within this subsection, an approved fixed route may not be transferred to another vehicle or permit holder. A permit holder may receive approval for a vehicle that is replacing a jitney already in service to use the approved fixed routes of the replaced vehicle.

(h) A permit holder may apply for a non-fixed, flexible route within an MTS determined geographic boundary and operational timeframe that MTS determines to be beneficial to passengers and businesses located within such boundaries. The application for a non-fixed, flexible route shall be in writing and shall contain the following information:

(1) A description of the vehicle(s) which will be utilizing the route;

(2) A map in sufficient detail to clearly indicate the proposed operation within the MTS approved geographic boundary;

(3) The fare to be charged; and

(4) Such other reasonable information as the Chief Executive Officer may, their discretion, require.

(Section 6.2 amended 7/30/2026)
(Section 6.2 amended 1/20/2022)
(Section 6.2 amended 11/12/2020)
(Section 6.2 amended 11/14/2002)

Section 6.3 – Operating Regulations

(a) It is unlawful for any jitney to remain standing on any public street in the City, except when enabling passengers to load or unload, or except when standing in a jitney holding zone for the time period established by MTS.

(b) It is unlawful for any person including, but not limited to, a jitney owner, driver, or agent thereof, to approach and solicit patronage upon the streets, sidewalks, in any theater, hall, hotel, public resort, railway, airport, or light rail transit station.

(c) A peace officer or MTS inspector may authorize a dispatcher to solicit passengers and assist with loading passengers at such times and places as, in ~~his/her~~their discretion, public service and traffic conditions require.

(d) Except when a driver or operator is actually engaged in assisting passengers to load or unload, a jitney driver or operator must remain within twelve (12) feet of his/her jitney while the jitney is in service.

(e) It is unlawful for a jitney vehicle to operate a fixed route service on other than that route designated by the Chief Executive Officer.

(f) It shall be unlawful for a jitney driver to load or unload passengers in any place other than an authorized jitney stop, bus stop, or passenger loading zone.

(g) All other operating regulations defined in Section 1.8 apply.

(Section 6.3 amended 7/30/2026)
(Section 6.3 amended 11/14/2002)

Section 6.4 - Jitney Holding Zones

(a) The Chief Executive Officer may, by resolution, locate and designate holding zones for one (1) or more jitneys, which holding zones when so established, shall be designated by appropriate signs. The operating regulations of Section 6.3 shall apply to any holding zones so established, and to holding zones established by the San Diego Unified Port District in areas under its jurisdiction. The Chief Executive Officer may, by their discretion, establish the maximum number of jitneys permitted to remain standing at one time in a holding zone.

(b) Each holding zone established hereunder shall be in operation twenty-four (24) hours of every day, unless otherwise specified by the Chief Executive Officer. The Chief Executive Officer shall adopt written standards to determine whether to allow holding zones to be in operation fewer than twenty-four (24) hours every day. If a holding zone is to be in operation fewer than twenty-four (24) hours every day, the Chief Executive Officer shall cause signs to be posted at or near the holding zone indicating the hours and days of operation.

(c) The Chief Executive Officer may, on their own motion, establish holding zones.

(d) Any individual, partnership, corporation, association or other organization may petition MTS requesting that a new holding zone be established. The petition must be filed in writing with the Chief Executive Officer or his/her designee. The petition must state the reason for the request and the proposed location(s). The Board may approve, deny, or modify the request.

(e) Whether initiated by the Chief Executive Officer under Subsection (c) of this section or by persons described in Subsection (d) of this section, before any holding zone is established, the proposed location of any holding zone must be reviewed by the Traffic Engineer of the City. The Traffic Engineer shall report his/her recommendations to approve, deny, or modify the proposed location in writing to the Chief Executive Officer. The Traffic Engineer's report shall include a statement of reasons supporting the recommendation to the Chief Executive Officer.

(f) The Chief Executive Officer shall, by resolution, establish a maximum time limit for individual jitneys to remain standing in any holding zone. The time limit shall apply uniformly to all holding zones.

(g) It shall be unlawful for a vehicle other than a jitney with a proper MTS jitney permit to occupy a jitney holding zone.

(Section 6.4 amended 1/20/2022)
(Section 6.4 amended 11/15/2012)

Section 6.5 - Equipment and Specifications

(a) Each jitney shall bear on the outside, signs clearly designating the route which it serves. The specifications of the sign are subject to the approval of the Chief Executive Officer. The Chief Executive Officer shall adopt written standards for approval or denial of the size of the signs, the location of the signs on the vehicle, the size of the lettering or graphics on the signs, and other specifications that the Chief Executive Officer finds necessary.

(b) All jitney vehicles must bear a trade name and shall be assigned a body number by the permit holder. The trade name and body number so assigned shall be placed on the vehicle in accordance with written standards adopted by the Chief Executive Officer.

Any violation of this Ordinance shall constitute an infraction unless otherwise specified.

SECTION 7.0 – LOW-SPEED VEHICLES

Section 7.1 – Low-Speed Vehicle (LSV) Definition

Low-Speed Vehicles (LSV) shall mean every vehicle that is designated per the requirements of Ordinance No. 11, Section 1.1(s). LSVs may operate by zones and/or a prearranged basis.

(Section 7/1 amended 3/14/2024)
(Section 7.1 amended 2/14/2019)
(Section 7.1 amended 11/8/2018, effective 1/1/2019)
(Section 7.0 and 7.1 added 8/7/2003)

Section 7.2 – Establishment of Zones

The Chief Executive Officer shall establish and authorize the use of zones of operation.

(Section 7.2 added 8/7/2003)

Section 7.3 – Zone Rates of Fare

(a) All vehicles permitted as LSV may use two methods of seeking compensation, either by zone rates or on a prearranged basis. Either method may be used when working inside of an approved zone. However, when operating on a prearranged charter basis, within an approved zone, no operator may exceed the maximum number of vehicles that are permitted.

~~(b) Within thirty (30) calendar days following the issuance of a permit by the Chief Executive Officer, each permit holder shall file a document with the Chief Executive Officer reflecting the rates of fare being charged by said permit holder for LSV services.~~

~~(c) When a permit holder desires to change the rates of fare being charged for LSV services during any calendar year, they shall first file a document with the Chief Executive Officer indicating said changes, and no change shall be effective until fourteen (14) days following the filing of said change.~~

~~(d~~(b) No permit holder shall charge any rate of fare for LSV services unless said rates are ~~on file with the Chief Executive Officer as aforesaid, and duly~~clearly and conspicuously displayed.

(~~e~~c) The rates of fare shall be established by a zone and/or prearranged written contract on a per-mile or per-hour basis.

~~(f) The maximum rates of fare shall be established pursuant to Section 2.2.~~

(Section 7.3 amended 7/30/2026)
(Section 7.3 amended 1/20/2022)
(Section 7.3 amended 10/13/2016)
(Section 7.3 added 8/7/2003)

Section 7.4 – ~~Spare Vehicle Policy~~BLANK

~~(a) The following sets out procedures for LSV permit holders to place a spare vehicle into service as either a temporary replacement for a permitted vehicle that is out of service for recharging or mechanical problems.~~

~~(1) Spare LSVs must be marked with the approved company markings.~~

~~(2) In place of the medallion number, the spare LSV must be marked "Spare LSV." Where more than one spare LSV is being requested, under the provisions of paragraph 9, the LSVs will be marked "Spare LSV 1," "Spare LSV 2," and so on. The "Spare LSV" marking should be sized to fit in approximately the same space as the medallion number would otherwise be placed with legibility and visibility being the primary criteria.~~

~~(3) Spare LSVs must be inspected upon initial issuance and annually thereafter.~~

~~(4) All spare LSVs must meet all MTS insurance requirements.~~

~~(5) To use a spare LSV that meets the requirements of 1 through 4 above, the permit holder must communicate in writing (facsimile is acceptable), a request to place a spare LSV into service.~~

~~The request must state:~~

~~(A) the medallion number of the LSV being taken out of service, the reason for being out of service, and the location of the out-of-service LSV; and~~

~~(B) the estimated time the spare LSV will be in use.~~

~~(6) When the out-of-service LSV is ready to re-enter service, the permit holder must immediately notify MTS in writing (facsimile is acceptable).~~

~~(7) The out-of-service LSV may not be required to be reinspected to be placed back into service.~~

~~(8) The spare LSV must be removed from service at the time the LSV it has been replacing is placed back into service.~~

~~(9) Under normal circumstances, a permit holder may utilize spare LSVs. Permit holders may utilize spare LSVs in a ratio of 3:1 permits held.~~

~~(10) Spare LSVs that are placed in service may only operate inside of the MTS-approved zone or zones. A permit holder shall not operate more spare vehicles than he/she has regular permitted vehicles.~~

~~(11) A permit holder found to have operated a spare LSV in deliberate violation of these procedures will be subject to immediate suspension/revocation of the permit and the loss of the spare LSV utilization privilege.~~

The text of Section 7.4 is deleted in its entirety effective July 30, 2026.

(Section 7.4 deleted 7/30/2026)
(Section 7.4 amended 10/13/2016)
(Section 7.4 amended 10/16/2003)
(Section 7.4 added 8/7/2003)

Section 7.5 – ~~LSV Driver Identification Cards~~BLANK

~~(a) Refer to Section 1.12 of this Ordinance to reference driver and permit holder ID requirements.~~

The text of Section 7.5 is deleted in its entirety effective July 30, 2026.

(Section 7.5 deleted 7/30/2026)
(Section 7.5 added 8/7/2003)

Section 7.6 - Equipment and Specifications

(a) Each LSV shall display whether out of service in accordance with section 2.4 (g) of this Ordinance, which shall indicate to a person outside the LSV whether the LSV is in operation or is not.

(b) Exterior Markings

(1) Mandatory Exterior Vehicle Markings. The ~~medallion number~~Permit Number shall be painted or permanently affixed, on the front of the vehicle, one (1) inch below the permit holder's trade name, two (2) inches high, utilizing "Univers" or other Chief Executive Officer pre-approved font in black or white lettering to produce maximum contrast adequately spaced for maximum readability.

(2) Optional Exterior Vehicle Markings. The permit holder has the option of choosing to post any combination of the below-listed five options on their LSV which must be posted only at the specific location and in the size noted and are subject to the Chief Executive Officer's approval.

(A) Trade Name Logo. If the permit holder chooses to display their trade name logo, the trade name logo shall be posted only on the rear portion of both side rear quarter panels.

(B) Radio Service Provider. If the permit holder chooses to display the radio service provider name or logo, the radio service provider name or logo cannot utilize the words "cab" or taxi." The radio service provider name or logo must be displayed only on the rear portion of both side rear quarter panels.

(C) Telephone Number. If permit holder chooses to display a telephone number, the telephone number must be no more than two (2) inches in height and posted only on the top front portion of both front side quarter panels.

(D) "Driver Carries Only $_____Change". If the permit holder chooses to post "Driver Carries only $_____Change", postings must be located only on panels near the rear door but clear of the rates of fare.

(E) "Leased to Driver". If permit holder chooses to post "Leased to Driver," it must be posted only on both rear quarter panels near the rear door area but clear of the rate of fares in lettering no larger than 1 inch.

(3) All other exterior vehicle markings are prohibited unless they are directly related to the permit holder's business and pre-approved by the Chief Executive Officer.

(c) All LSVs shall be equipped and operated so that they have adequate means of electronic communication during business hours. The LSV company business address shall serve as the storefront for the purpose of handling lost and found items. All other operational requirements she be met as set forth in section 1.8 ~~(c).~~.

(d)
Low-Speed Vehicles shall comply with the California Vehicle Code, e.g., not impede traffic, and, where applicable, not operate on streets where posted speed limits are above 35 miles per hour.

(Section 7.6 amended 7/30/2026)
(Section 7.6 amended 1/20/2022)
(Section 7.6 amended 11/8/2018, effective 1/1/2019)
(Section 7.6 amended 12/14/2017)
(Section 7.6 amended 10/4/2016)
(Section 7.6 added 8/7/2003)

SECTION 8 - ~~EFFECTIVE DATE OF ORDINANCE~~BLANK

~~This Ordinance shall be effective 30 days after adoption, and before the expiration of 15 days after its passage, this Ordinance shall be published once with the names of the members voting for and against the same in a newspaper of general circulation published in the County of San Diego.~~
The text of Section 8 is deleted in its entirety effective July 30, 2026

(Section 8 deleted 7/30/2026)

Formatted: Font: Bold

Formatted: Font: Bold, Italic

Formatted: Indent: First line: 0"

Amended: 7/30/2026
Amended: 3/14/2024
Amended: 10/19/2023
Amended: 12/8/2022

Amended: 1/20/2022
Amended: 11/12/2020
Amended: 12/12/2019
Amended: 10/10/2019
Amended: 2/14/2019
Amended: 11/8/2018
Amended: 9/20/2018
Amended: 12/14/2017
Amended: 10/13/2016
Amended: 5/12/2016
Amended: 9/17/2015
Amended: 2/12/2015
Amended: 11/15/2012
Amended: 4/19/2012
Amended: 10/16/2003
Amended: 8/7/2003
Amended: 5/8/2003
Amended: 11/14/2002
Amended: 6/27/2002
Amended: 5/23/2002
Amended: 6/24/1999
Amended: 9/24/1998
Amended: 10/30/1997
Amended: 4/10/1997
Amended: 2/13/1997
Amended: 11/9/1995
Amended: 6/22/1995
Amended: 1/12/1995
Amended: 6/24/1993
Amended: 6/27/1991
Amended: 5/23/1991
Amended: 10/11/1990
Repealed & Readopted: 8/9/1990
Amended: 4/12/1990
Amended: 4/27/1989
Adopted: 8/11/1988

Clerk Affidavit

PASSED AND ADOPTED, by the Board of Directors this 30th day of July 2026. The Ordinance amended was adopted by the following vote:

AYES:

NAYS:

ABSENT:

ABSTAINING:

_____
Chairperson
San Diego Metropolitan Transit System

ATTEST my hand and the seal of the San Diego Metropolitan Transit System this 30th day of July 2026.

Approved as to form:

_____	_____
Clerk of the Board San Diego Metropolitan Transit System	General Counsel San Diego Metropolitan Transit System

Metropolitan Transit System

Policies and Procedures No. 34

Board Approval: ~~3/14/2024~~7/30/2026

SUBJECT:

FOR-HIRE VEHICLE SERVICES

PURPOSE:

To establish a policy with guidelines and procedures for the implementation of MTS Ordinance No. 11.

BACKGROUND:

Regulation of for-hire vehicle service is in the interest of providing the citizens and visitors to the MTS region and particularly the Cities of Chula Vista, El Cajon, Imperial Beach, La Mesa, Lemon Grove, National City, Oceanside, Poway, San Diego, and Santee, with a good quality local transportation service. Toward this end, MTS finds it desirable to regulate the issuance of taxicab permits, to establish maximum rates of fare, and to provide for annual review of cost-recovery regulatory fees.

POLICY:

34.1 City of San Diego Entry Policy

New City of San Diego taxicab permits will be issued in accordance with San Diego City Council Policy No. 500-02, “Taxicab Permits”.

34.2 Maximum Rates of Fare Policy

Except for Electronically Booked taxicab trips, as further defined at MTS Ordinance No. 11, maximum rate of fare for exclusive ride and group ride hire of taxicabs shall be made~~-~~ in accordance with the change in the Annual All Urban Western Transportation Consumer Price Index (CPI)/San Diego. The fare structure shall consist of the dollar amounts charged by permit holders for the flag drop, the per-mile charge, waiting-time charge, first zone, and each additional zone charge. The maximum rates of fare shall be computed annually by the Chief Executive Officer and presented at a noticed public hearing of the Taxicab Advisory Committee.

34.2.1 Maximum Rates of Fare Determination

Unless Section 34.2.2 applies, the maximum fare determination shall be adjusted annually based on the 1990 Western transportation CPI/San Diego amounts of $1.40 flag drop, $1.50 per mile, and $12.00 per hour

waiting. Adjustments shall be rounded up or down, as appropriate, to the nearest even $0.10 increment.

34.2.2 Maximum Rates of Fare Determination - Only for Taxicabs Equipped with Point Of Sale Devices Electronically Connected to the Taximeter and Equipped with Printed ~~orElectronically~~or Electronically Conveyed Receipt Capability

Taxicabs equipped with point of sale devices electronically connected to the taximeter and capable of printing or electronically coveying receipts may charge the an increase of 6% more than the Maximun Rates of Fare for Taxicabs without such devices, as determined pursuant to Section 34.2.1. Adjustments shall be rounded up or down, as appropiate, to the nearest $0.10 increment.

34.3 Airport Taxicab Fare Policy

In addition to the applicable maximum rate of fare described in Section 34.2.1, a taxicab operator may charge an “extra” equal to the Airport Trip Fee assessed against the individual taxicab operator by the San Diego County Regional Airport Authority. The extra may not be charged on any trip that does not originate at the airport or on any trip where the taxicab operator does not pay the fee to the San Diego County Regional Airport Authority. The extra charge may only be charged to the customer by utilizing the extra button on the taxicab meter. A driver may not verbally request payment.

34.4 Regulatory Fee Review

The following procedures will be utilized for the establishment of for-hire vehicle regulatory fees.

34.4.1 In accordance with State of California Public Utilities Code Section 120266, MTS shall fully recover the cost of regulating the taxicab and other for-hire vehicle industry. Pursuant to MTS Ordinance No. 11, Sections 1.3(b), 1.4(a), 1.4((c), and 1.5(d), the Chief Executive Officer establishes a fee schedule to effect full-cost recovery and notify affected permit holders of changes in the fee schedule.

34.4.2 The procedure for establishing a regulatory fee schedule will include an annual review of the audited expenses and revenue of the previous fiscal year associated with MTS for-hire vehicle activities. The revised fee schedule will be available for review by interested parties in November each year ~~and is subject to appeal as provided for in Ordinance No. 11, Section 1.5(d).~~.

34.4.3 A fee schedule based on previous year expenses and revenue amounts will be put into effect each January.

POLICY.34.FOR-HIRE VEHICLE SERVICES

This policy was originally adopted on 12/8/88. This policy was amended on 7/26/90.

This policy was amended on 5/9/91.
This policy was amended on 6/13/91.
This policy was amended on 1/28/93.
This policy was amended on 5/11/95.
This policy was amended on 10/31/02.
This policy was amended on 4/24/03.
This policy revised on 3/25/04.
This policy was amended on 4/26/07.
This policy was amended on 7/17/08.
This policy was amended on 4/19/12.
This policy was amended on 4/16/15.
This policy was amended on 12/12/2019.
This policy was amended on 10/19/2023.
This policy was amended on 3/14/2024.
This policy was amended on 7/30/2026.