Executive Committee Agenda

November 05, 2026

Click link to access the meeting:

https://www.zoomgov.com/j/1619530340

Zoom Meeting ID

Ways to Join

Computer: Click the link above. You will be prompted to run the Zoom browser or Zoom application. Once signed on to the meeting, you will have the option to join using your computer audio system or phone.

Webinar Features:

Raise Hand	▶	Use the **raise hand** feature every time you wish to make a public comment.
CC	▶	Participants can enable **closed captioning** by clicking the CC icon. You may also view the full transcript and change the font size by clicking 'subtitle settings'. These features are not available via phone.
	▶	This symbol shows you are **muted**, click this icon to unmute your microphone.
	▶	This symbol shows you are currently **unmuted**, click this button to mute your microphone.
	▶	The chat feature should be used by panelists and attendees solely for "housekeeping" matters as comments made through this feature will not be retained as part of the meeting record. See the **Live Verbal Public Comment** for instructions on how to make a public comment.

Smartphone or Tablet: Download the Zoom app and join the meeting by clicking the link or using the webinar ID (found in the link).

Download on the App Store

GET IT ON Google Play

Phone:

1. If you are joining the meeting audio by phone and viewing the meeting on a device, dial the number provided in the 'join audio' phone call tab of the initial pop-up, and enter the Meeting ID (found in the link).
2. If you are joining by phone only, dial: **+1-669-900-9128** or **+1-253-215-8782** and type the meeting ID found in the link, press #. You will have access to the meeting audio, **but will NOT be able to view the PowerPoint presentations.**

Live Verbal Public Comments: Use the 'Raise Hand' icon every time you wish to make a public comment on an item. Raise your hand once the agenda item you wish to comment on has been called. In person public comments will be taken first, virtual attendees will be taken in the order in which they raise their hand. Requests to speak will not be taken after the public comment period ends, unless under the Chair's discretion. General Public Comment, at the beginning of the Board of Directors meeting only, will be limited to five speakers. Additional speakers with general public comments will be heard at the end of the meeting. Two-minutes of time is allotted per speaker, unless otherwise directed by the Chair.

Public Comments Made Via Zoom

1. Click the link found at the top of this instruction page
2. Click the raise hand icon located in the bottom center of the platform
3. The Clerk will announce your name when it is your turn to speak
4. Unmute yourself to speak

Public Comments Made by Phone Only

1. Dial **+1-669-900-9128**
2. Type in the zoom meeting ID found in the link and press #
3. Dial *9 to raise your hand via phone
4. The Clerk will call out the last 4 digits of your phone number to announce you are next to speak
5. Dial *6 to unmute yourself

Written Public Comments (before the meeting): Written public comments will be recorded in the public record and will be provided to MTS Board Members in advance of the meeting. Comments must be emailed or mailed to the Clerk of the Board* by 4:00pm the day prior to the meeting.

Translation Services: Requests for translation services can be made by contacting the Clerk of the Board* at least four working days in advance of the meeting.

In-Person Participation: In-person public comments will be heard first. Following in-person public comments, virtual attendees will be heard in the order in which they raise their hand via the Zoom platform. Speaking time will be limited to two minutes per person, unless specified by the Chairperson. Requests to speak will not be taken after the public comment period ends, unless under the Chair's discretion.

Instructions for providing in-person public comments:

1. Fill out a speaker slip located at the entrance of the Board Room;
2. Submit speaker slip to MTS staff seated at the entrance of the Board Room;
3. When your name is announced, please approach the podium located on the right side of the dais to make your public comments.

Members of the public are permitted to make general public comment at the beginning of the agenda or specific comments referencing items on the agenda during the public comment period. General Public Comment, at the beginning of the Board of Directors meeting only, will be limited to five speakers. Additional speakers with general public comments will be heard at the end of the meeting.

Assistive Listening Devices (ALDs): ALDs are available from the Clerk of the Board* prior to the meeting and are to be returned at the end of the meeting.

Reasonable Accommodations: As required by the Americans with Disabilities Act (ADA), requests for agenda information in an alternative format or to request reasonable accommodations to facilitate meeting participation, please contact the Clerk of the Board* at least two working days prior to the meeting.

***Contact Information:** Contact the Clerk of the Board via email at ClerkoftheBoard@sdmts.com, phone at **(619) 398-9561** or by mail at **1255 Imperial Ave. Suite 1000, San Diego CA 92101.**

Agenda del Comité Ejecutivo

November 05, 2026

Haga clic en el enlace para acceder a la reunión:

https://www.zoomgov.com/j/1619530340

ID de la reunión en Zoom

Formas de Participar

Computadora: Haga clic en el enlace más arriba. Recibirá instrucciones para operar el navegador de Zoom o la aplicación de Zoom. Una vez que haya iniciado sesión en la reunión, tendrá la opción de participar usando el sistema de audio de su computadora o teléfono.

Funciones del Seminario En Línea:

Levantar la mano	▶	Use la herramienta de **levantar la mano** cada vez que desee hacer un comentario público.
CC	▶	Los participantes pueden habilitar **el subtitulado** haciendo clic en el ícono CC. También puede ver la transcripción completa y cambiar el tamaño de letra haciendo clic en “configuración de subtítulos”. Estas herramientas no están disponibles por teléfono.
	▶	Este símbolo indica que usted se encuentra en **silencio**, haga clic en este ícono para quitar el silenciador de su micrófono.
	▶	Este símbolo indica que su micrófono se encuentra **encendido**. Haga clic en este símbolo para silenciar su micrófono.
	▶	La herramienta de chat deben usarla los panelistas y asistentes únicamente para asuntos “pertinentes a la reunión”, ya que comentarios realizados a través de esta herramienta no se conservarán como parte del registro de la reunión. Consulte el **Comentario público verbal** en vivo para obtener instrucciones sobre cómo hacer un comentario público.

Teléfono Inteligente o Tableta: Descargue la aplicación de Zoom y participe en la reunión haciendo clic en el enlace o usando el ID del seminario web (que se encuentra en el enlace).

Descarga en el App Store

Obténla en Google Play

Teléfono:

1. Si está participando en la reunión mediante audio de su teléfono y viendo la reunión en un dispositivo, marque el número indicado en la pestaña de llamada telefónica “unirse por audio” en la ventana emergente inicial e ingrese el ID de la reunión (que se encuentra en el enlace).
2. Si está participando solo por teléfono, marque: **+1-669-900-9128** o **+1-253-215-8782** e ingrese el ID de la reunión que se encuentra en el enlace, pulse #. Tendrá acceso al audio de la reunión, **pero NO podrá ver las presentaciones en PowerPoint.**

Comentarios Públicos Verbales en Vivo: Use la herramienta “levantar la mano” cada vez que desee hacer un comentario público sobre alguno de los artículos. Levante la mano una vez que el artículo de la agenda sobre el que desea comentar haya sido convocado. Los comentarios públicos en persona se escucharán primero, se escuchará a los asistentes virtuales en el orden en el que levanten la mano. No se aceptarán solicitudes para hablar después de que termine el periodo para hacer comentarios públicos, a menos de que el presidente determine de otra forma a su discreción. Comentarios públicos generales, únicamente al inicio de la reunión de la Junta de Directores, se limitarán a cinco personas que deseen hablar. Las personas adicionales que deseen aportar comentarios públicos generales podrán hacerlo al final de la reunión. Se otorga dos minutos de tiempo por persona que desee hablar, a menos de que el presidente instruya de otra forma. (*Consulte la página 2 para obtener instrucciones sobre cómo hacer un comentario público.*)

Comentarios Públicos a Través de Zoom

1. Haga clic en el enlace que se encuentra en la parte superior de esta página de instrucciones
2. Haga clic en el ícono de levantar la mano en el centro inferior de la plataforma
3. El secretario anunciará su nombre cuando sea su turno de hablar
4. Desactive el silenciador para que pueda hablar

Comentarios Públicos Realizados Únicamente por Teléfono

1. Marque el **+1-669-900-9128**
2. Ingrese el ID de la reunión en Zoom que se encuentra en el enlace y pulse #
3. Marque *9 para levantar la mano por teléfono
4. El secretario indicará los últimos 4 dígitos de su número de teléfono para anunciar que usted será el siguiente en hablar
5. Marque *6 para desactivar el silenciador



Comentarios Públicos por Escrito (Antes de la Reunión): Los comentarios públicos por escrito se registrarán en el registro público y se entregarán a los miembros de la Junta de MTS antes de la reunión. Los comentarios deben enviarse por correo electrónico o postal al secretario de la Junta* antes de las 4:00 p.m. el día anterior a la reunión.



Servicios de Traducción: Pueden solicitarse servicios de traducción comunicándose con el secretario de la Junta* por lo menos cuatro días hábiles antes de la reunión.



Participación en Persona: Los comentarios públicos en persona se escucharán primero. Después de los comentarios públicos en persona, se escuchará a los asistentes virtuales en el orden en el que levanten la mano a través de la plataforma de Zoom. El tiempo para hablar se limitará a dos minutos por persona, a menos de que el presidente especifique de otra forma. No se recibirán solicitudes para hablar después de que termine el periodo para hacer comentarios públicos, a menos de que el presidente determine de otra forma a su discreción.

Instrucciones para brindar comentarios públicos en persona:

1. Llene la boleta para personas que desean hablar que se encuentran en la entrada de la Sala de la Junta.
2. Entregue la boleta para personas que desean hablar al personal de MTS que se encuentra sentado en la entrada de la Sala de la Junta.
3. Cuando anuncien su nombre, por favor, acérquese al podio ubicado en el lado derecho de la tarima para hacer sus comentarios públicos.

Los miembros del público pueden hacer comentarios públicos generales al inicio de la agenda o comentarios específicos que hagan referencia a los puntos de la agenda durante el periodo de comentarios públicos. Los comentarios públicos generales únicamente al inicio de la reunión de la Junta de Directores, se limitarán a cinco personas que deseen hablar. Las personas adicionales que deseen aportar comentarios públicos generales podrán hacerlo al final de la reunión.



Dispositivos de Asistencia Auditiva (ALD, por sus siglas en inglés): Los ALD están disponibles con el secretario de la Junta* antes de la reunión y estos deberán ser devueltos al final de la reunión.



Facilidades Razonables: Según lo requerido por la Ley de Estadounidenses con Discapacidades (ADA, por sus siglas en inglés), para presentar solicitudes de información de la agenda en un formato alternativo o solicitar facilidades razonables para facilitar su participación en la reunión, por favor, comuníquese con el secretario de la Junta* por lo menos dos días hábiles antes de la reunión.



***Información de Contacto:** Comuníquese con el secretario de la Junta por correo electrónico en ClerkoftheBoard@sdmts.com, por teléfono al **(619) 398-9561** o por correo postal en **1255 Imperial Ave. Suite 1000, San Diego CA 92101.**

Metropolitan Transit System

Executive Committee

Agenda

November 05, 2026 at 9:00 a.m.

In-Person Participation: James R. Mills Building, 1255 Imperial Avenue, 10th Floor Board Room, San Diego CA 92101

The Executive Committee also serves as the Audit Oversight Committee and Budget Development Committee

Teleconference Participation: (669) 254-5252; Webinar ID: 161 953 0340, https://www.zoomgov.com/j/1619530340

NO.	ITEM SUBJECT AND DESCRIPTION	ACTION
1.	**Roll Call**	
2.	**Public Comments** This item has a two minute per speaker time limit. If you have a report to present, please give your copies to the Clerk of the Board.	
3.	**Approval of Minutes** Action would approve the October 1, 2026 Executive Committee meeting Minutes.	Approve
	DISCUSSION ITEMS	
4.	**Audit Results and Draft of Fiscal Year (FY) 2026 Annual Comprehensive Financial Report (ACFR) (Erin Dunn and Jennifer Pentoney, MTS; Coley Delaney of The Pun Group)**	Informational
5.	**Fiscal Year (FY) 2026 Final Operating Budget Results (Gordon Meyer)** The Executive Committee would receive the MTS operations budget status report for FY 2026 and forward a recommendation to the MTS Board of Directors to approve staff recommendations for programming excess revenues and less expenses as follows: 1) Allocate $1,728,000 to the contingency reserve to achieve the Board Policy 36, section 36.4 target of 12.5% for FY 2027; and 2) Allocate the remaining $3,044,000 to the operating deficit reserve for future structural deficit balancing.	Approve
6.	**Grants Administration Report (Julia Tuer, Kena Teon, and Vanessa Slifer)**	Informational
7.	**Preparation for El Niño Conditions (Brian Riley and Heather Furey)**	Informational
	OTHER ITEMS	
8.	**Review of Draft November 19, 2026 MTS Board Agenda**	

9. Staff Communications and Committee Member Communications

10. Next Meeting Date: December 10, 2026

11. Adjournment

Metropolitan Transit System

MTS STAFF USE ONLY
Public Comment
AI #: 2 Date: 11/5/26
No. in queue: 1

IN – PERSON PUBLIC COMMENT

SPEAKER INFORMATION (please print)

Agenda Item No.: 2

Name: William Keith Telephone: 619-551-6368

Email: WilliamKeith848@gmail

City of Residence: San Diego

Remark Subject: General Comment

Affiliated Organization: SELF

PLEASE SUBMIT THIS COMPLETED FORM BACK TO THE CLERK

INSTRUCTIONS

This meeting is offered both in an in-person and virtual format. In-person speaker requests will be taken first. Speaking time will be limited to two minutes per person, unless specified by the Chairperson. Please make your comment at the podium located on the right side of the dais. Members of the public are permitted to make general public comments at the beginning of the agenda or make specific comments on any item in the agenda at the time the Board/Committee is considering the item during the meeting. Requests to speak will not be taken after the public comment period ends, unless under the Chair's discretion.

BOARD OF DIRECTORS MEETING

General Public Comment at the beginning of the agenda will be limited to five speakers with the standard two-minute limit, unless otherwise directed by the Chair. Additional speakers with general public comments will be heard at the end of the meeting.

MEETING RECORD

A paraphrased version of this comment will be included in the minutes. The full comment can be heard by reviewing the recording posted on the respective meeting website: https://www.sdmts.com/about/meetings-and-agendas. This form will be included in the Meeting Materials posted on the respective MTS meeting site.

MINUTES

MEETING OF THE SAN DIEGO METROPOLITAN TRANSIT SYSTEM

EXECUTIVE COMMITTEE

October 1, 2026

[Clerk's note: Except where noted, public, staff and board member comments are paraphrased. The full comment can be heard by reviewing the recording at the MTS website.]

1. Roll Call

Chair Whitburn called the Executive Committee meeting to order at 9:10 a.m. A roll call sheet listing Executive Committee member attendance is attached as Attachment A.

2. Public Comment

There were no Public Comments.

3. Approval of Minutes

Board Member Downey moved to approve the minutes of the September 10, 2026, MTS Executive Committee meeting. Board Member Dillard seconded the motion, and the vote was 4 to 0 in favor with Vice Chair Goble, Board Member Montgomery Steppe and Board Member Moreno absent.

DISCUSSION ITEMS

4. Orange Line Improvement Project Update (Heather Furey and Consultant T.Y. Lin)

Heather Furey, MTS Senior Director of Capital Projects, and David Holan, T.Y. Lin, presented on Orange Line Improvement Project Update. They presented on: Project overview, project schedule, phase 1 updates, construction update, construction progress, summary of phase 1 weekend closures, communications outreach and phase 1 construction labor reporting, phase 2 updates; owner furnished equipment, construction, pre-construction coordination, construction progress, project funding, phase 1 funding balance, phase 2 funding balance, percent of project within local cities, State agency coordination, risk management, top risks and next steps.

Public Comment

There were no Public Comments.

Committee Comment

Chair Whitburn thanked staff for the quarterly update on the Orange Line Improvement Project and stated that it was valuable to see the project remained on schedule and within budget. He expressed appreciation for the communication efforts with riders throughout the project and noted the absence of rider complaints regarding service closures shows that communication with the riders was effective and successful.

Board Member Elo-Rivera asked when the most recent analogous project for MTS was. Ms. Furey responded that the Mid-Coast project was a similar investment, but it had not been conducted on an active operating Trolley line. She explained that the Trolley renewal program that took place between 2010-2015 was the most comparable, noting that the project re-signaled and reconstructed the Blue Line stations and included modifications to the Orange Line. Board Member Elo-Rivera asked if there were any noticeable differences between the framework for past projects and that of the current projects.

Ms. Furey responded that one similarity between the Blue Line and the Orange Line was the close coordination with the California Public Utilities Commission (CPUC) to implement re-signaling in segments. She noted that one key difference in the current project was the pre-purchase of materials, explaining that material had to be purchased in advance because of matching fund requirements and state funding restrictions. Ms. Furey added that this approach has enabled MTS to expend funds more quickly.

Ms. Cooney noted that a noteworthy aspect of the Trolley renewal program was that it had been funded in part by Transnet. She explained that, because the funding was administered by SANDAG, SANDAG had served as the project lead for the approximately $650M project.

Board Member Elo-Rivera asked whether MTS was able to pre-purchase materials using a portion of its funding while materials funded by the state were required to be purchased incrementally. He also asked whether a comparison had been conducted to quantify the savings associated with pre-purchasing materials, noting that while he understood the state's rationale for delaying purchases until design completion, significant savings could warrant consideration by state legislators.

Ms. Furey explained that the state divided projects into phases, including planning, design and construction. She stated that MTS had wanted to purchase special track work during the design phase, but the state considered that approach risky because the design could change before construction began. She added that a schedule analysis could be conducted and brought back to compare the cost differences associated with pre-purchasing materials. Ms. Furey noted that while some cost savings exist, the primary advantage of pre-purchasing is reducing the lead time required to receive materials.

Karen Landers, MTS General Counsel, stated that pre-purchasing materials had helped reduce project delays by avoiding lengthy procurement and contractor purchasing process. She noted that some materials have lead time of 12 to 18 months and that acquiring them in advance had helped mitigate schedule and cost risks. Ms. Landers added that the strategy had been successful on most projects, despite one past instance in which changing San Diego Gas & Electric (SDG&E) requirements affected purchased materials.

Board Member Elo-Rivera asked whether MTS used a design bid build method and how the agency determined when to use a design bid build. Ms. Furey responded that for this project they used a design bid build approach and explained that pre-qualified contractors had been established because the work was highly specialized. She noted that, at the time the project was initiated, MTS did not have an in-house design-build contract template available. Ms. Furey added that the design-build is generally better suited for vertical construction projects, whereas this project required significant operational input regarding signaling systems and crossover locations along the corridor. Board Member Elo-Rivera asked whether MTS had the ability to use a design-build delivery method when it determined that approach was appropriate. Ms. Furey responded that MTS did have that capability and added that the agency had recently awarded its first design-build contract, which was approved at the July or September Board meeting.

Board Member Dillard thanked staff for the presentation and stated that she was excited for Phase 2 to begin. She expressed her concerns about potential El Niño weather impacts and asked what precautions and preparations were being taken to avoid project delays. Ms. Furey responded that MTS had been actively preparing for the storms by ensuring that storm drains throughout the rail corridor were functioning properly. She stated that staff had been coordinating closely with contactors and emphasized the need for flexibility in responding to

weather-related emergencies. Ms. Furey added that the contract included allowances for whether-related delays, with Phase 1 accounting for 19 potential delay days, and that a similar approach could be applied to Phase 2. She added that while significant rainfall had not yet affected scheduled work windows, conditions could change. Ms. Furey explained that staff met before each All Work Window (AWW) to determine whether work could proceed and noted that Variable Message Sign (VMS), X, and other social media platforms had been effective tools for communicating last minute changes to the public.

Action Taken

No action taken. Informational item only.

5. Land Value Capture (Sharon Cooney and Tim Garett, San Diego Association of Governments (SANDAG))

Sharon Cooney, MTS Chief Executive Officer (CEO), and Tim Garrett, Associate Regional Planner, SANDAG , presented on Land Value Capture. They presented on: how Land Value Capture relates to MTS, strategies, and recommendations, MTS evaluation of Value Capture, the case of Value Capture, considerations prior to embarking, types of Value Capture strategies: joint development, land value taxation, parking fees or toll revenue, naming rights, negotiated extractions, Special Assessment Districts (SADs), Tax Increment Financing (TIF), Various TIF tools available; SANDAG Value Capture Study 2024, Kearny Mesa Station Area, Tecolote Road Trolley Station, Implementation strategy foundation, next steps and considerations.

Public Comment

There were no Public Comments.

Committee Comment

Board Member Elo-Rivera thanked staff for the presentation and noted that Land Value Capture falls under the boarder category of non-fare revenue. He asked whether staff had a recommendation regarding which strategies should be pursued first and whether there was a preferred order for pursuing the various options.

Ms. Cooney stated that if the Board was interested in pursuing additional funding mechanisms, the Climate Resilience District (CRD) could serve as a good starting point. She explained that such districts have been used throughout California to generate revenue for municipalities and transit operators to support the development of climate resilience infrastructure. Ms. Cooney added that pursuing this option could help initiate discussions with the City regarding implementation.

Ms. Landers added that MTS was preparing to initiate discussions with the City regarding collaborative approaches to addressing stormwater and climate resilience challenges. She noted that MTS was pursuing a federal grant for a climate resiliency study and exploring opportunities through a forthcoming state stormwater grant program. Ms. Landers highlighted flooding challenges in the Switzer Creek watershed area near 12th and Imperial and stated that partnership with the City on grant applications could help address shared infrastructure needs. She further noted that these discussions could provide an opportunity to explore concepts such as a CRD and other funding strategies in a more comprehensive and coordinated manner.

Ms. Cooney stated that, ultimately, it would be beneficial to engage a consultant to evaluate the various strategies and determine the most effective approach. She noted that MTS had already

met with a couple of consultants with expertise in the field and experience working on similar efforts statewide.

Board Member Elo-Rivera expressed his interest in exploring CRD strategies and asked whether the potential benefits would be categorized as revenue generation, cost saving or a combination of both. Ms. Cooney responded that the strategies presented were intended to provide direct benefits to the agency by addressing needs such as flood mitigation and transit station rehabilitation. Ms. Landers added that most of the funding opportunities would support Capital Improvement Programs (CIP) projects, thereby relieving pressure on existing CIP resources and allowing more funding to be directed toward State of Good Repair (SGR) operations.

Board Member Elo-Rivera sought clarification regarding the affordability requirements that MTS applies to its housing development projects. He asked whether staff was suggesting or recommending that MTS reconsider those affordability requirements or simply acknowledging the agency's emphasis on affordability can limit potential revenue from housing developments.

Ms. Cooney stated that the Board had previously made a policy decision to prioritize affordability in transit-oriented development projects. She stated that MTS remained committed to advancing affordable housing projects, noting recent upcoming developments. Ms. Cooney added that these projects generate transit ridership and provide significant public benefits, while also acknowledged that the emphasis on affordability can limit revenue generation.

Ms. Landers clarified that the Board's emphasis on affordable housing stemmed from policy changes adopted in 2018. She explained that affordable housing projects provide important public benefits and support transit ridership but generally generate less revenue for MTS than market rate developments. Ms. Landers noted that additional requirements, such as prevailing wage and skilled labor provisions, can increase development costs and affect financial returns. She added that previous analyses and feedback from the development community indicated such requirements may make market rate projects less financially feasible. Ms. Landers stated that information on these tradeoffs could be brought back to the Board for further discussion if desired.

Board Member Elo-Rivera stated that feasibility and increased cost are not necessarily the same and expressed interest in a more nuanced discussion regarding MTS's affordable housing requirements. He emphasized the value of providing affordable housing in high opportunity communities, acknowledged the need for middle income housing, and noted that concerns about project feasibility do not always prevent projects from moving forward successfully. Ms. Landers stated that it would be helpful to review transit agency and local government development agreements throughout California to better understand the terms of affordable and market rate housing projects. She explained that this research could help identify additional development approaches that may be viable for MTS.

Board Member Elo-Rivera noted that energy and sustainability had not been addressed in the presentation and asked why it was not included. He also inquired whether there had been any follow up discussions with San Diego Community Power (SDCP) since the Board's previous discussion on the topic. Ms. Cooney responded that energy and sustainability had not been included in the presentation because she had not yet had the opportunity to review the recently completed solar study examining opportunities for solar development on MTS owned properties. She also stated that a follow up conversation with SDCP had not yet occurred. Board Member Elo-Rivera stated that one reason for his question was the existence of SDCP year round Request for Information (RFI) process and other available programs. He noted that

understanding those opportunities and how MTS could benefit from them would be valuable, whether through revenue generation or energy cost savings.

Board Member Elo-Rivera also asked about MTS's annual energy expenditures. Mike Thompson, MTS Deputy Chief Financial Officer, responded that most of MTS's energy spending is paid to SDG&E for electricity delivery and demand charges, which would not be affected by participation in SDCP programs. He stated that MTS spends approximately $6M annually on electricity commodity purchases and noted that purchasing that energy though SDCP would currently cost approximately 20% more. Mr. Thompson added that MTS has explored energy-related opportunities, but the dispersed nature of the transit system presents challenges.

Board Member Elo-Rivera expressed confusion because SDCP had identified programs that could reduce energy costs and noted that some options appeared to be less expensive on a per-customer basis. Mr. Thompson responded that SDCP is less expensive than purchasing electricity directly from SDG&E, but explained that MTS does not purchase its electricity commodity from SDG&E. He stated that MTS procures electricity through California's Direct Access program and that purchasing electricity through SDCP would be approximately 20% more expensive than MTS's current procurement method.

Board Member Elo-Rivera suggested that if purchasing electricity through SDCP was not cost effective, a potential opportunity could be to utilize MTS owned property for solar development and lease the land for energy generation purposes. He noted that additional analysis would be needed and asked whether that was part of the analysis that had been conducted. Mr. Thompson confirmed that the solar study had evaluated the potential use of MTS owned property for solar development and noted that available funding support would be an important factor in determining project feasibility due to upfront investment required. Ms. Cooney stated that Mr. Thompson and his staff continuously review contracts to ensure they remain more financially advantageous than alternative electricity purchasing options. Board Member Elo-Rivera stated that while the opportunity may not result in energy cost savings, he remained interested in the revenue generating potential of using MTS owned land and properties for solar projects. He noted that leasing agency property to developers for solar generation could provide an additional source of revenue for MTS.

Board Member Downey noted that she wanted to build on the discussion regarding the potential energy and revenue opportunities associated with MTS owned properties. Drawing on her experience in energy law, she stated that leasing land for solar development is generally not the most lucrative approach because the developer retains the revenue generated from the sale of electricity, while the property owner receives only lease payments. Board Member Downey added that energy related cost savings, particularly through battery storage and demand charge reductions, may provide greater financial benefits, although such opportunities are complex given MTS's dispersed facilities and utility rate structures.

Board Member Downey then asked with respect to potential funding districts and partnerships with local jurisdictions, what incentives cities would have to share revenues or funding with MTS, noting that cities also face significant fiscal pressures and questioning how such arrangements would be structured. Ms. Cooney acknowledged that there are many competing public needs for limited funding and stated that decisions ultimately require determining which public priorities will receive available resources. Board Member Downey stated that strategies such as naming rights, advertising, and the use of billboards or electronic displays appeared to be the most practical revenue generating opportunities because they could be implemented directly by MTS without relying on outside partners. She also observed that many of the other

strategies discussed were more likely to offset costs rather than generate new revenue and thanked staff for the presentation, noting that it had been very helpful.

Board Member Elo-Rivera asked whether the estimated $1.1B associated with the Enhanced Infrastructure Financing District (EIFD) represented the total projected revenue generated over the 40-year period of MTS's share of that revenue. Mr. Garrett responded that the $1.1B figure represented the total incremental property tax revenue generated above the baseline for the City and County over the approximately 45-year life of the EIFD. He explained that the baseline property tax revenues would continue to flow to the participating agencies, while a portion of the incremental growth in property tax revenues would be directed to the EIFD. Mr. Garrett added that the total revenue generated would depend on the district's boundaries and the level of development that occurs within the district. Board Member Elo-Rivera stated that an EIFD can be more attractive when the infrastructure investment enables development that would not otherwise occur. He noted that, in those circumstances, sharing future incremental tax revenues can be beneficial because it helps generate broader economic and community benefits.

Board Member Moreno noted that the next step appeared to be hiring a consultant to determine the value of MTS owned land and asked what the process would entail. She also asked how quickly the study could be completed and the anticipated timeline for receiving the results. Ms. Cooney responded that the effort would be broader than determining land values alone and would include evaluating leases, concessions, and other revenue generating assets. She stated that the scope of work had already been developed, though the procurement process had not yet begun.

Ms. Landers stated that the study would likely take twelve to eighteen months to complete, including approximately six months for consultant procurement and six months for the study itself. She added that the review would assess a broad range of revenue generating assets, including fiber infrastructure, existing leases, concessions, and potential development opportunities. Board Member Moreno expressed support for conducting the asset valuation study, stating that there is significant value in understanding MTS's assets and their potential uses. She noted that she looked forward to reviewing the results of the study.

Board Member Moreno stated for the record that she has consistently opposed the use of billboards and digital signage, citing concerns about visual impacts and community character. She noted her preference for maintaining San Diego's current approach to outdoor advertising and referenced her prior opposition to MTS signage installations in downtown San Diego.

Board Member Moreno shared her experience as the Chair of the Otay Mesa EIFD, noting that it is one of the longest running EIFDs in California. She described how EIFDs can be effective tools for funding public infrastructure projects, particularly transportation improvements, but emphasized that revenues must be used for projects identified in an approved infrastructure financing plan and require oversight by a governing authority. Board Member Moreno also noted that establishing and implementing an EIFD is a lengthy process that requires coordination among participating agencies and voter approval for bonding authority. She expressed skepticism regarding the likelihood of jurisdictions sharing revenues with MTS but acknowledged that exploring the concept may still be worthwhile. Board Member Moreno thanked staff for the presentation and information provided.

Chair Whitburn thanked staff for the presentation and stated that he would be interested in learning more about potential air rights opportunities, particularly at the bus operations center on Imperial Avenue. He noted the ongoing housing development activity in the area and expressed interest in opportunities that could support the continued revitalization of the corridor. Chair

Whitburn also voiced support for the ongoing partnership discussion with the City regarding stormwater issues, noting that shared priorities could create meaningful opportunities for collaboration. He thanked staff and SANDAG for their work and participation in the discussion.

Action Taken

No action taken. Informational item only.

OTHER ITEMS

6. Review of Draft October 15, 2026 Board Agenda

7. Other Staff and Committee Member Communications and Business

Board Member Dillard invited the public to attend La Mesa's Oktoberfest, noting that it was the city's largest annual event. She highlighted several new additions for the event, encouraged attendees to bring family and friends, and promoted the use of public transit.

8. Next Meeting Date

The next Executive Committee meeting is scheduled for November 5, 2026, at 9:00 a.m.

9. Adjournment

The meeting was adjourned at 10:41 a.m.

/s/ Stephen Whitburn	/s/ Lucia Mansour
Chairperson San Diego Metropolitan Transit System	Clerk of the Board San Diego Metropolitan Transit System

Attachment: A. Roll Call Sheet

SAN DIEGO METROPOLITAN TRANSIT SYSTEM
EXECUTIVE COMMITTEE

ROLL CALL

MEETING OF (DATE): 10/1/2026 CALL TO ORDER (TIME): 9:10 a.m.

RECESS: _____ RECONVENE: _____

CLOSED SESSION: _____ RECONVENE: _____

PUBLIC HEARING: _____ RECONVENE: _____

ORDINANCES ADOPTED: _____ ADJOURN: 10:41 a.m.

REPRESENTING	BOARD MEMBER		ALTERNATE		PRESENT (TIME ARRIVED)	ABSENT (TIME LEFT)
Chair	Whitburn	☒	No Alternate	☐	9:10 a.m.	10:41 a.m.
City of San Diego	Elo-Rivera	☒	Whitburn	☐	9:10 a.m..	10:41 a.m.
County of San Diego	Montgomery Steppe	☐	Aguirre	☐	ABSENT	ABSENT
East County	Dillard	☒	Hall	☐	9:10 a.m.	10:41 a.m.
SANDAG Transportation Committee	Moreno	☒	Dillard	☐	9:23 a.m.	10:41 a.m.
South Bay	Fernandez	☐	Downey	☒	9:10 a.m.	10:41 a.m.
Vice Chair	Goble	☐	No Alternate	☐	ABSENT	ABSENT

SIGNED BY THE CLERK OF THE BOARD: /s/ Lucia Mansour

Metropolitan Transit System

Agenda Item No. 04

MEETING OF THE SAN DIEGO METROPOLITAN TRANSIT SYSTEM
JOIN AUDIT OVERSIGHT AND EXECUTIVE COMMITTEE

November 5, 2026

SUBJECT:

Audit Results and Draft of Fiscal Year (FY) 2026 Annual Comprehensive Financial Report (ACFR) (Erin Dunn and Jennifer Pentoney, MTS; Coley Delaney of The Pun Group)

INFORMATIONAL ONLY

Budget Impact

None

DISCUSSION:

Good governance principles and MTS's enabling legislation, Public Utilities Code section 120105(e), require that an audit of the financial transactions and records of MTS be made at least annually by a certified public accountant. On February 8, 2024 (Agenda Item 10), the Board approved a multi-year contract with The Pun Group LLP for external audit services, including an ACFR.

The FY 2026 ACFR is nearing completion and will be presented to the Joint Audit Oversight and Executive Committee in advance of being presented to the full Board on November 19, 2026. As of this distribution date, staff expect no material changes to the financial report with the following exceptions:

1. Formatting and final proofreading.
2. Subsequent Events are subject to be added until the report is published.

Key financial highlights for the year can be found in the Management's Discussion and Analysis included in the draft ACFR in Attachment A. Coley Delaney from The Pun Group will be present to provide comments regarding the external audit and draft financial report.

/s/ Sharon Cooney
Sharon Cooney
Chief Executive Officer

Key Staff Contact: Julia Tuer, 619.557.4515, Julia.Tuer@sdmts.com

Attachments: A. FY2026 ACFR Draft
B. Auditor's Communication to Those Charged With Governance

Metropolitan Transit System

Annual Comprehensive Financial Report

For the Fiscal Years Ended June 30, 2026 and 2025

San Diego, California







San Diego
Metropolitan Transit System

San Diego, California

Annual Comprehensive Financial Report
and Independent Auditor's Reports

For the Years Ended June 30, 2026 and 2025

PREPARED BY SAN DIEGO METROPOLITAN TRANSIT SYSTEM
FINANCE DEPARTMENT

This page intentionally left blank.

San Diego Metropolitan Transit System

Table of Contents

Page

Introductory Section (Unaudited):
- Letter of Transmittal i
- Listing of Board of Directors and Management vii
- Executive Level Organization Chart ix
- Certificate of Achievement for Excellence in Financial Reporting – GFOA x

Financial Section:
- **Independent Auditor's Report** 1
- **Management's Discussion and Analysis – Required Supplementary Information (Unaudited)** 5
- **Basic Financial Statements:**
  - **Business–Type Activities (Primary Government)**
    - Statements of Net Position 14
    - Statements of Revenues, Expenses and Changes in Net Position 15
    - Statements of Cash Flows 16
  - **Fiduciary Fund Financial Statements**
    - Statements of Fiduciary Net Position 20
    - Statements of Changes in Fiduciary Net Position 21
  - **Notes to the Basic Financial Statements** 27
- **Required Supplementary Information (Unaudited):**
  - Schedule of Proportionate Share of the Net Pension Liability 94
  - Schedule of Changes in Net Pension Liability and Related Ratios:
    - SDTI CALPERS Plans 96
    - SDTI PARS Plan 98
    - SDTC Plan 100
  - Schedule of Contributions:
    - MTS 102
    - SDTI CALPERS Plans 104
    - SDTI PARS Plan 106
    - SDTC Plan 108
  - Schedule of Changes in the Total OPEB Liability and Related Ratios:
    - MTS 110
    - SDTI 112
    - SDTC 114
- **Supplementary Information:**
  - Combining Schedule of Net Position 119
  - Combining Schedule of Revenues, Expenses, and Changes in Net Position 120
  - Combining Schedule of Cash Flows 122
  - Schedules of Revenues, Expenses, and Changes in Net Position – Budget and Actual:
    - Combined Operations 124
    - General Operations 125
    - For Hire Vehicle Administration 126
    - San Diego and Arizona Eastern Railway 127
    - MTS – Contracted Services 128
    - San Diego Transit Corporation (SDTC) 129
    - San Diego Trolley, Inc. (SDTI) 130

San Diego Metropolitan Transit System

Table of Contents (Continued)

Page

Statistical Section (Unaudited):
Financial Trends:
Net Position by Component 134
Changes in Net Position 136
Revenue Capacity:
Operating Revenues by Source 141
Fare Structure 142
Farebox Recovery Percentage 144
Debt Capacity:
Ratio of Outstanding Debt by Type 147
Demographic and Economic Statistics:
Regional Population and Personal Income Statistics 150
Full-Time and Part-Time Employees by Function 151
Ten Largest Employers in San Diego County 152
Operating Information:
Operating Indicators by Function 154
Service Performance Data 156
Capital Asset Statistics by Function 158
Ridership 160
Operating Subsidy 162

Independent Auditor's Report on Internal Control Over Financial Reporting and on Compliance and Other Matters Based on an Audit of Financial Statements Performed in Accordance with *Government Auditing Standards* 165

INTRODUCTORY SECTION

This page intentionally left blank.

Metropolitan Transit System

Board of Directors and Transit Riders
San Diego Metropolitan Transit System

The annual comprehensive financial report of the San Diego Metropolitan Transit System (MTS) for the fiscal years ended June 30, 2026 and 2025 is hereby submitted. Responsibility for both the accuracy of the data, and the completeness and fairness of the presentation, including all disclosures, rests with management. The MTS Board of Directors has established an Audit Oversight Committee to provide an additional level of scrutiny to the preparation of the annual comprehensive financial report. Management of MTS is responsible for establishing and maintaining an internal control structure designed to ensure that the assets of MTS are protected from loss, theft, or misuse and to ensure that adequate accounting data are compiled to allow for preparation of financial statements in conformity with accounting principles generally accepted in the United States of America (U.S. GAAP). The internal control structure is designed to provide reasonable, but not absolute, assurance that these objectives are met. The concept of reasonable assurance recognizes that (1) the cost of a control should not exceed the benefits likely to be derived and (2) the valuation of costs and benefits requires estimates and judgments by management. As management, we assert that, to the best of our knowledge and belief, this financial report is complete and reliable in all material respects.

State statutes require an annual audit by independent certified public accountants. The Pun Group, LLP, Accountants and Advisors, has been retained to meet this requirement. The goal of the independent audit was to provide reasonable assurance that the financial statements of MTS for the fiscal years ended June 30, 2026 and 2025 are free of material misstatement. The independent audit involved examining, on a test basis, evidence supporting the amounts and disclosures in the financial statements; assessing the accounting principles used and significant estimates made by management; and evaluating the overall financial statement presentation. The independent auditors concluded, based upon the audit, that there was a reasonable basis for rendering an unmodified opinion that MTS's financial statements for the fiscal years ended June 30, 2026 and 2025 are fairly presented, in all material respects, in conformity with U.S. GAAP. The independent auditor’s report is presented as the first component of the financial section of this report.

The independent audit was also designed to meet the requirements of a broader, federally mandated "Single Audit" and to meet the special needs of federal grantor agencies. The standards governing Single Audit engagements required the independent auditor to report not only on the fair presentation of the financial statements, but also on the audited government's internal controls and compliance with legal requirements, with special emphasis on internal controls and legal requirements involving the administration of federal awards. The reports related specifically to the Single Audit are issued under separate cover.

U.S. GAAP requires that management provide a narrative introduction, overview, and analysis to accompany the financial statements in the form of Management’s Discussion and Analysis (MD&A). This letter of transmittal is designed to complement the MD&A and should be read in conjunction with it. The MD&A can be found immediately following the report of the independent auditors.

REPORTING ENTITY

The San Diego Metropolitan Transit System was created effective January 26, 1976 to provide the policy setting and overall management coordination of the public transportation system in the San Diego metropolitan service area. This service area encompasses approximately 3 million people residing in a 570 square mile area of San Diego County, including the cities of Chula Vista, Coronado, El Cajon, Imperial Beach, La Mesa, Lemon Grove, National City, Poway, Santee, and San Diego and the unincorporated area of the County of San Diego.

MTS's mission statement, adopted by the Board of Directors, is to enhance the personal mobility of San Diego metropolitan area residents and visitors by:

- Obtaining maximum benefit for every dollar spent.
- Being the community's major public transportation advocate.
- Increasing public transportation usage per capita.
- Taking a customer-oriented approach.
- Implementing capital projects on schedule and within budget.
- Offering high-quality public transportation services.
- Responding to the community's socioeconomic interests.

California law establishes the San Diego Association of Governments (SANDAG) as the planning agency for San Diego County. The responsibility and decision-making for all transportation-related planning, programming and development activities occurs within SANDAG's ten member Transportation Committee. Approved transportation plans and programs are subsequently executed by SANDAG staff. Within this structure, MTS and the North County Transit District (NCTD) focus primarily on operating activities.

MTS is effectively an umbrella agency. MTS owns the assets of San Diego Trolley, Inc. (SDTI) and San Diego Transit Corporation (SDTC), the area's two largest transit operators. These two transit units were formed under California law as not-for-profit public corporations and function as operating subsidiaries of MTS. SDTI and SDTC are considered component units and are blended component units for financial reporting purposes. SDTI operates five Light Rail Transit (LRT) routes: the UC San Diego Blue Line from the UTC Station to San Ysidro at the International Border, the Orange Line from the Courthouse station through Centre City and then east to El Cajon, the Green Line from the 12th and Imperial Transit Center Bayside platform to El Cajon, the Copper Line East County Connector that runs from Santee to El Cajon and the Silver Line that operates on select holidays making stops along the downtown loop using three restored vintage cars from the 1940's and 1981**.** SDTI operates on a total of 65 miles of track. SDTC operates 25 routes with an active fleet of 256 buses.

The relationship between MTS and the transit operating subsidiaries, SDTI and SDTC, is formally established through operating agreements and MTS-adopted corporate policies. These agreements and corporate policies specify the roles and responsibilities of each of the organizations and outline the procedures in numerous functional areas including accounting and budgeting, fare setting, marketing and public information, revenue-producing advertising, service contracts, and programming of federal, state and local subsidies. The MTS Board of Directors has the policy-setting responsibility for the operation and development of MTS's transit operating subsidiaries as well as for the planning and approval of capital expenditures by or on behalf of these entities. The day-to-day operating functions, labor matters and maintenance of facilities are managed by the individual transit operators. MTS has centralized and consolidated Security, Planning, Human Resources, Finance, Information Technology, Stores, and Purchasing for MTS and all subsidiaries.

In addition to the bus routes operated by SDTC, MTS is financially accountable for the operation of certain additional bus routes. MTS contracts with outside parties for the operation of 72 fixed-route bus lines and paratransit services with an active fleet of 480 buses. The contracts require full operation and maintenance of the bus services. Contract services are accounted for in the MTS - Contracted Services Fund for financial reporting purposes.

MTS owns the San Diego and Arizona Eastern Railway Company (SD&AE), a not-for-profit railroad holding company entrusted with assets which include 108 miles of rail line and over 2,000 acres of property. MTS has a contract with the San Diego and Imperial Valley Railway Co. (SDIV) for the operation of freight rail services over the UC San Diego Blue Line (downtown San Diego south to San Ysidro) and Orange Line (downtown San Diego east to El Cajon) trolley segments. MTS provides no subsidy to SDIV but does receive a portion of its gross revenue. SD&AE is considered a blended component unit for financial reporting purposes.

The For-Hire Vehicle Administration (FHV) licenses and regulates taxicabs, jitneys, nonemergency medical, charter, low speed vehicle, and sightseeing for-hire vehicles for the following cities San Diego, National City, El Cajon, Imperial Beach, La Mesa, Lemon Grove, Poway, Santee, Chula Vista and Oceanside. Although MTS is financially accountable for the operation of FHV, it is full cost recovery through FHV permit fees.

The MTS Board of Directors is comprised of 15 members with four appointed from the City of San Diego (the Mayor of San Diego and three San Diego City Council Members), two appointed from the City of Chula Vista (the Mayor of Chula Vista and a Chula Vista City Council Member), one appointed from each City Council of Coronado, El Cajon, Imperial Beach, La Mesa, Lemon Grove, National City, Poway, and Santee, and one appointed from the San Diego County Board of Supervisors.

ECONOMIC CONDITION AND OUTLOOK

Economic conditions across the nation and California continue to reflect moderate growth amid persistent inflation, elevated costs, and uncertainty surrounding interest rates and economic policy. San Diego's diverse economy provides stability within this environment, supported by tourism, defense and military operations, life sciences and biotechnology, technology and innovation, higher education, and cross-border trade with Mexico. San Diego County's real Gross Domestic Product (GDP) reached approximately $267 billion in 2024, placing the region among the ten largest local economies in the nation. Cross-border commerce also remains an important component of the regional economy, with approximately $60 billion in goods moving annually through the Otay Mesa Port of Entry. Tourism continued to support economic activity, with an estimated 32.8 million visitors in 2025, compared with approximately 32.5 million in 2024. San Diego hotels reported an occupancy rate of approximately 72.3% and moderate growth is expected in 2026. Consumer activity has remained relatively stable, although performance has varied among sectors. Countywide, taxable sales increased 3.1%, with restaurants, hotels and home furnishings among the stronger-performing categories. Inflation has eased from recent highs but continues to affect the cost of living, as the San Diego-Carlsbad Consumer Price Index increased 2.6% over the 12 months ending January 2026. Labor market conditions have improved slightly, with San Diego County's unemployment rate at 4.5% in June 2026 compared with 4.9% a year earlier.

Long-term financial planning

Passenger Revenue and Ridership

The long-term goal of MTS is to fund operations solely with recurring revenues, but since the COVID-19 pandemic in 2020, as well as the next three years looking forward, that will not be the case. MTS ridership and the associated fare revenue continue to lag the pre-pandemic run rate. The approved FY2026 budget assumed a 13% reduction in fare revenues compared to FY2019, the last full fiscal year pre-pandemic. Overall, ridership did not increase in FY2026 compared to FY2025, just over 81 million passengers again this year, and passenger fare revenue increased by 6.8% to finish at $70.3 million. While ridership and passenger fare revenue are still well below the pre-pandemic baselines, MTS does expect ridership and passenger fare revenue to continue to steadily grow over the next four years. Additionally, the San Diego Association of Governments (SANDAG) approved amendments to the San Diego region's Comprehensive Fare Ordinance. The SANDAG Transportation Committee approved the fare change on July 17, 2026, and the SANDAG Board of Directors ratified that action on July 24, 2026. The fare change action includes increases in one way, day pass, and monthly pass rates effective October 1, 2026.

Subsidy Revenue

Regional sales tax receipts increased in FY2026, with Transportation Development Act (TDA) receipts increasing 1.3% versus the prior year and Transnet receipts increasing by 1.9%. State Transit Assistance (STA), derived from the state sales tax on diesel fuel, decreased from $33.6 million in FY2025 to $31.2 million in FY2026, a 7.1% decrease.

MTS received two new grants this year

- FTA Grants for Buses and Bus Facilities Program – MTS was awarded $14,680,000 for the Kearny Mesa Transit Center, with a 20% local match of $3,670,000 in future fiscal years.

- Caltrans Sustainable Transportation Planning Grant- MTS was awarded $442,650 (plus $57,350 in local match). The study will assess the Otay Mesa community's transit needs and recommend necessary adjustments to the MTS transit network to serve those needs. Several key areas in Otay Mesa currently lack adequate transit service.

MTS will utilize funds in the operating deficit reserve and SB125 funds to balance the operating budget until depleted. Additionally, MTS has a contingency reserve balance of 12.5% of the operating budget at its disposal.

Non-Fare Revenue

MTS is constantly looking for new streams of non-fare revenue for the agency. MTS is expanding its digital kiosk network, adding 40 more Trolley station ad panels, and creating a new concession kiosk at the Iris Avenue Transit Center. MTS is also expanding its bus advertising wrap program and looking to add a digital billboard to its Copley Park division that faces the 52 freeway. Another non-fare revenue stream was approved by the MTS Board for station naming rights on the Trolley's Green Line. MTS entered into a naming rights agreement for the Grantville Trolley Station with the developers of Union Grantville, LLC. Under the contract, the station is officially referred to as the Union Grantville Station, and over the life of this contract, MTS would realize over $2.5 million in additional revenue.

Major Initiatives

Customer Experience and Satisfaction

MTS continues to focus on a Comprehensive Operational Analysis (COA) to evaluate the efficiency of our operations with the OnTrack project. This analysis is crucial for addressing a significant budget deficit, with a fiscal cliff projected by 2030. The first phase of public engagement wrapped up in late Summer 2025, with more than 450 hours of in-person outreach for MTS team members. Staff organized nearly 30 community and transit center events, presented at nearly two dozen community and partner workshops, and launched an online public comment tool to help reach as many people as possible. In total, more than 7,600 people participated in an MTS OnTrack engagement activity in the first five months of engagement. After analyzing travel data, the current system's performance and public feedback, the Planning Department is developing some initial concepts for options to expand transit and make improvements to the system. A second round of community engagement allows the public to "vote" on what types of service improvements and potential projects they want to see funded in MTS's plan for the future of transit service.

Over the past few years, multiple surveys revealed that riders want better amenities at stops and stations. MTS continued to make progress on its amenities program over the past year by installing more digital boards at stations and a digital board pilot on the Trolleys themselves. In October 2025, MTS unveiled a new mural in San Ysidro at the Beyer Boulevard Trolley Station. The vibrant artwork is part of MTS's larger beautification efforts, which aim to improve its passenger experience through art, safety upgrades, and infrastructure improvements.

MTS also continues to enhance the rider experience with technology. The rollout of new state-of-the-art digital signs started with the Trolley's Orange Line in 2025 and work continues on the UC San Diego Blue Line and Green Line in 2026. The new digital signs provide greater display flexibility, enabling real-time Trolley arrival updates, delivery of critical passenger notifications, special event information, public service announcements, and more. Additionally, ten Trolley cars have been equipped with digital monitors inside of the vehicles as part of a pilot. The goal is to see if the monitors improve communication, operations and customer experience. MTS is also preparing to install new digital wayfinding signs at key downtown Trolley stations: 12th & Imperial, Convention Center, America Plaza and County Center/Little Italy. Installation is expected to take three to four months, with completion in 2026.

The signs will both generate non-fare revenue and enhance the rider's experience. Each sign will feature advertising space, a Trolley map, and dedicated space for alerts, detours, and event updates.

Joint Transit-Oriented Development Projects

With all of San Diego in desperate need of more affordable housing, MTS continues to seek joint transit-oriented development (TOD) projects across its system to repurpose its park and ride lots into affordable housing solutions across the county.

In March 2026, MTS and Affirmed Housing, a leading provider of affordable and supportive housing throughout California, announced the completion of SkyLINE, a seven-story, mixed-use, transit-oriented affordable housing community at the Rancho Bernardo Transit Station. The new development delivers 100 affordable apartment homes and new amenities for transit riders, transforming an underutilized park-and-ride site into a community centered on housing and mobility. Developed by Affirmed Housing on land leased from MTS, SkyLINE includes 100 apartments for individuals and families earning between 30 and 55 percent of the area median income, including one unit for an onsite property manager. The project includes one, two and three bedroom homes, as well as shared amenities, such as laundry rooms, a community room with a learning center, furnished outdoor space for resident gatherings, and a tot-lot play area.

In April 2026, the MTS Board of Directors approved a disposition and development agreement with Eden Housing, Inc.'s Bayview Family Housing LP to bring a new 7-story affordable housing development to Chula Vista. Located steps away from the E Street Transit Center, the development will offer residents direct access to the Blue Line and numerous bus routes, connecting them to recreational, educational, medical, and employment opportunities throughout the region. The project at the E Street Transit Center is part of a master planned joint TOD effort between MTS and the City of Chula Vista, who have been partnering since 2018 on the TOD project. Bayview Point LLC, the master developer, has been under an exclusive negotiating agreement with the City and MTS since 2022. Other properties MTS is in the process of redeveloping include:

- Palm Avenue Trolley Station – 406 units
- Spring Street Station – 147 estimated units
- Beyer Blvd Transit Center – 100 estimated units
- 12th & Imperial Transit Center – in partnership with the San Diego Foundation, looking to develop a high rise for affordable and market-rate housing

MTS is actively looking to redevelop the following properties:

- El Cajon Transit Center
- H Street Transit Center
- Euclid Transit Center
- Riverwalk

AWARDS AND ACKNOWLEDGMENTS

MTS received the 2026 GOLD Award during APTA's Bus Safety & Security Excellence Awards which recognizes public transportation organizations for their innovative and proactive safety and security programs. MTS created an effective “Hot Spots” Bus Safety Program that targets repeat accident locations with cinematic video training, drone imagery, and operator-perspective footage. The program reduced preventable collisions and reinforced defensive driving where it matters most.

MTS received a perfect score from the FTA’s Triennial Review of the agency. That means the FTA has found no deficiencies in MTS’ management of FTA funds’ management and program implementation. The purpose of the FTA’s Triennial Review is to ensure compliance with regulations and also provide a forward-looking assessment of each agency’s risk in the management and implementation of FTA grant programs. Mandated by Congress in 1982, the Triennial Review examines how recipients of Urbanized Area Formula Program funds meet statutory and administrative requirements. The review assessed MTS’s management of federal funds and program implementation across 23 critical areas. These include financial management, maintenance, ADA and Title VI compliance, procurement, safety, and more.

The Government Finance Officers Association of the United States and Canada (GFOA) awarded a Certificate of Achievement for Excellence in Financial Reporting to MTS for its Annual Comprehensive Financial Report for the fiscal year ended June 30, 2025. This was the twentieth consecutive year and the thirtieth year overall that MTS has achieved this prestigious award. To be awarded a Certificate of Achievement, MTS must publish an easily readable and efficiently organized Annual Comprehensive Financial Report. This report must satisfy both generally accepted accounting principles and applicable legal requirements.

The Certificate of Achievement is valid for a period of one year only. We believe that our current Annual Comprehensive Financial Report continues to meet the Certificate of Achievement Program's requirements and we are submitting it to the GFOA to determine its eligibility for another certificate.

Acknowledgments

The staff of the finance department is to be commended for their efficient and dedicated service to the production of this report. In addition, we express our appreciation for the assistance and cooperation provided by management and staff in all departments throughout the organization.

Sharon Cooney
Chief Executive Officer

Larry Marinesi
Chief Financial Officer

November 5, 2026

San Diego Metropolitan Transit System

Listing of Board of Directors and Management

BOARD OF DIRECTORS

Members	Board position (elected position)
Stephen Whitburn	Chair, since 5/23; Board Member, since 12/20 (Councilmember, City of San Diego)
Steve Goble	Vice Chair, since 5/23; Board Member, since 1/17 (Councilmember, City of El Cajon)
Monica Montgomery Steppe	Chair Pro Tem, since 1/23; Board Member, since 12/18 (Supervisor, County Board of Supervisors)
Marcus Bush	Board Member, since 12/20 (Councilmember, City of National City)
Patricia Dillard	Board Member, since 1/23 (Councilmember, City of La Mesa)
Carrie Downey	Board Member, since 12/24 (Councilmember, City of Coronado)
Sean Elo-Rivera	Board Member, since 12/20 (Councilmember, City of San Diego)
Cesar Fernandez	Board Member, since 12/24 (Deputy Mayor, City of Chula Vista)
Todd Gloria	Board Member, since 12/20 (Mayor, City of San Diego)
Ronn Hall	Board Member, since 5/17 (Vice Mayor, City of Santee)
Matthew Leyba-Gonzalez	Board Member, since 12/20 (Councilmember, City of Imperial Beach)
John McCann	Board Member, since 12/23 (Mayor, City of Chula Vista)
Jennifer Mendoza	Board Member, since 1/25 (Councilmember, City of Lemon Grove)
Vivian Moreno	Board Member, since 12/18 (Councilmember, City of San Diego)
Steve Vaus	Board Member, since 1/25 (Mayor, City of Poway)

BOARD COMMITTEE MEMBERSHIP

Accessible Services Advisory Committee	Airport Authority Advisory Committee	The Joint Audit Oversight, Budget Development and Executive Committee	Los Angeles-San Diego Rail Corridor Agency
Cesar Fernandez, Chair	Ronn Hall	Stephen Whitburn, Chair Steve Goble, Vice Chair Patricia Dillard Sean Elo-Rivera Cesar Fernandez Monica Montgomery Steppe Vivian Moreno	Jennifer Mendoza

Public Security Committee	SANDAG Board	SANDAG Regional Planning Committee	SANDAG Transportation Committee
Monica Montgomery Steppe, Chair Patricia Dillard, Vice Chair Cesar Fernandez Henry Foster Steve Goble Ronn Hall Jose Rodriguez	Matthew Leyba-Gonzalez	Jennifer Mendoza	Vivian Moreno

San Diego Regional Building Authority	Taxicab Advisory Committee
Steve Goble	Sean Elo-Rivera, Chair

San Diego Metropolitan Transit System

Listing of Board of Directors and Management (Continued)

MTS MANAGEMENT

Staff	Position
Sharon Cooney	Chief Executive Officer
Karen Landers	General Counsel
Larry Marinesi	Chief Financial Officer
Mike Wygant	Chief Operating Officer, Transit Systems
Brian Riley	Chief Operating Officer, Rail
Jeff Stumbo	Chief Human Resources Officer
Ernesto Garcia	Chief Information Officer
Brent Boyd	Director, Planning
Heather Furey	Director, Capital Projects
Mark Olson	Director, Marketing and Communications
Herbert Taft	Director, Transit Enforcement & Passenger Safety
Julia Tuer	Manager of Government Affairs

San Diego Metropolitan Transit System

Executive Level Organization Chart

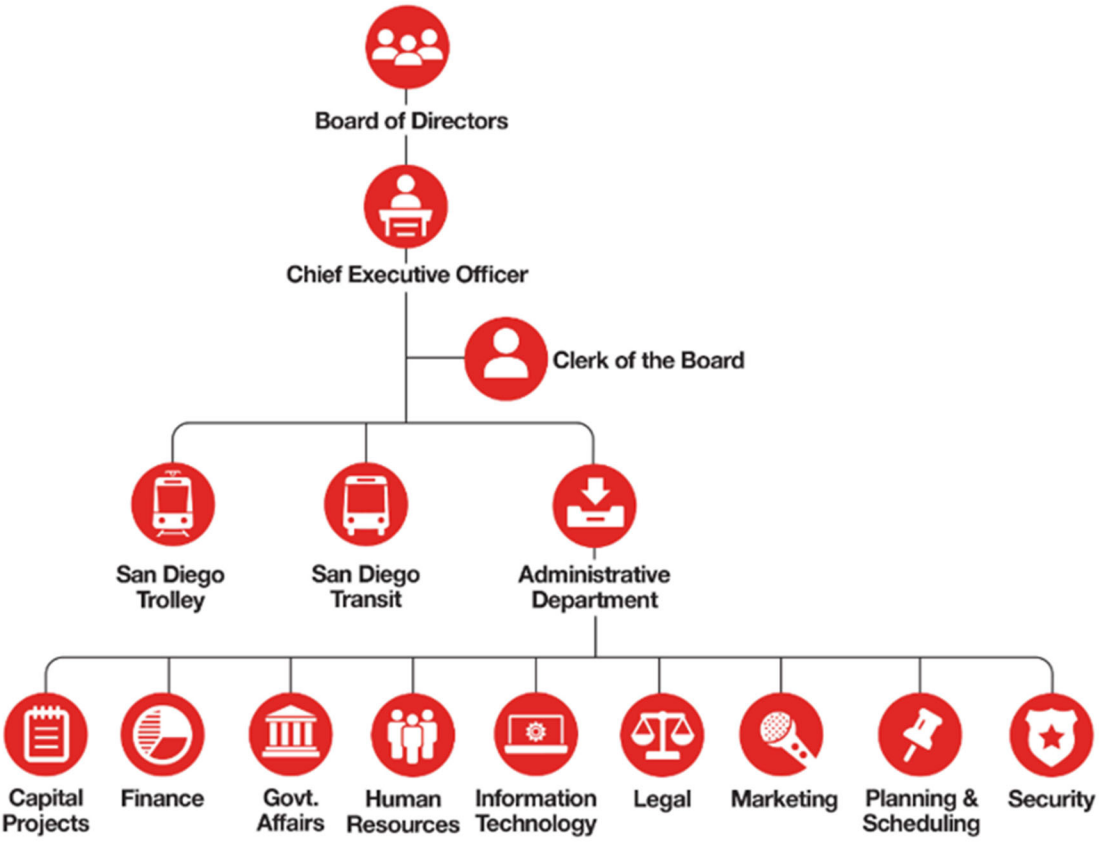

San Diego Metropolitan Transit System

Certificate of Achievement for Excellence in Financial Reporting - GFOA

Government Finance Officers Association

Certificate of Achievement for Excellence in Financial Reporting

Presented to

San Diego Metropolitan Transit System
California

For its Annual Comprehensive
Financial Report
For the Fiscal Year Ended

June 30, 2025

FINANCIAL SECTION

This page intentionally left blank.

INDEPENDENT AUDITOR'S REPORT

To the Board of Directors
of the San Diego Metropolitan Transit System
San Diego, California

Report on the Financial Statements

Opinions

We have audited the accompanying financial statements of the business–type activities and the aggregate remaining fund information of the San Diego Metropolitan Transit System ("MTS"), as of and for the years ended June 30, 2026 and 2025, and the related notes to the financial statements, which collectively comprise the MTS's basic financial statements as listed in the table of contents.

In our opinion, the financial statements referred to above present fairly, in all material respects, the financial position of the business–type activities and the aggregate remaining fund information of the MTS, as of June 30, 2026 and 2025, and the respective changes in financial position and, where applicable, cash flows thereof for the years then ended in accordance with accounting principles generally accepted in the United States of America.

Basis for Opinions

We conducted our audits in accordance with auditing standards generally accepted in the United States of America and the standards applicable to financial audits contained in *Government Auditing Standards* issued by the Comptroller General of the United States ("*Government Auditing Standards*"). Our responsibilities under those standards are further described in the Auditor's Responsibilities for the Audit of the Financial Statements section of our report. We are required to be independent of MTS and to meet our other ethical responsibilities, in accordance with the relevant ethical requirements relating to our audits. We believe that the audit evidence we have obtained is sufficient and appropriate to provide a basis for our audit opinions.

Emphasis of Matter – Change in Accounting Principle

As discussed in Notes 1 and 15 to the financial statements, MTS adopted Governmental Accounting Standards Board (GASB) Statement No. 103, *Financial Reporting Model Improvements*, for the year ended June 30, 2026. As a result, certain amounts in the 2025 statement of revenues, expenses, and changes in net position have been reclassified to conform to the current year presentation. The reclassifications had no effect on previously reported net position. Our opinions are not modified with respect to this matter.

Responsibilities of Management for the Financial Statements

Management is responsible for the preparation and fair presentation of the financial statements in accordance with accounting principles generally accepted in the United States of America, and for the design, implementation, and maintenance of internal control relevant to the preparation and fair presentation of financial statements that are free from material misstatement, whether due to fraud or error.

In preparing the financial statements, management is required to evaluate whether there are conditions or events, considered in the aggregate, that raise substantial doubt about MTS's ability to continue as a going concern for twelve months beyond the financial statement date, including any currently known information that may raise substantial doubt shortly thereafter.

Auditor's Responsibilities for the Audit of the Financial Statements

Our objectives are to obtain reasonable assurance about whether the financial statements as a whole are free from material misstatement, whether due to fraud or error, and to issue an auditor's report that includes our opinions. Reasonable assurance is a high level of assurance but is not absolute assurance and therefore is not a guarantee that an audit conducted in accordance with generally accepted auditing standards and *Government Auditing Standards* will always detect a material misstatement when it exists. The risk of not detecting a material misstatement resulting from fraud is higher than for one resulting from error, as fraud may involve collusion, forgery, intentional omissions, misrepresentations, or the override of internal control. Misstatements are considered material if there is a substantial likelihood that, individually or in the aggregate, they would influence the judgment made by a reasonable user based on the financial statements.

In performing an audit in accordance with generally accepted auditing standards and *Government Auditing Standards*, we

- exercise professional judgment and maintain professional skepticism throughout the audit.
- identify and assess the risks of material misstatement of the financial statements, whether due to fraud or error, and design and perform audit procedures responsive to those risks. Such procedures include examining, on a test basis, evidence regarding the amounts and disclosures in the financial statements.
- obtain an understanding of internal control relevant to the audit in order to design audit procedures that are appropriate in the circumstances, but not for the purpose of expressing an opinion on the effectiveness of MTS's internal control. Accordingly, no such opinion is expressed.
- evaluate the appropriateness of accounting policies used and the reasonableness of significant accounting estimates made by management, as well as evaluate the overall presentation of the financial statements.
- conclude whether, in our judgment, there are conditions or events, considered in the aggregate, that raise substantial doubt about MTS's ability to continue as a going concern for a reasonable period of time.

We are required to communicate with those charged with governance regarding, among other matters, the planned scope and timing of the audit, significant audit findings, and certain internal control–related matters that we identified during the audit.

Required Supplementary Information

Accounting principles generally accepted in the United States of America require that the Management's Discussion and Analysis, the Schedule of Proportionate Share of the Net Pension Liability and Related Ratios, the Schedules of Changes in Net Pension Liability and Related Ratios, the Schedules of Contributions – Pension Plans, and the Schedules of Changes in Total OPEB Liability and Related Ratios be presented to supplement the basic financial statements. Such information is the responsibility of management and, although not a part of the basic financial statements, is required by the Governmental Accounting Standards Board who considers it to be an essential part of financial reporting for placing the basic financial statements in an appropriate operational, economic, or historical context. We have applied certain limited procedures to the required supplementary information in accordance with auditing standards generally accepted in the United States of America, which consisted of inquiries of management about the methods of preparing the information and comparing the information for consistency with management's responses to our inquiries, the basic financial statements, and other knowledge we obtained during our audit of the basic financial statements. We do not express an opinion or provide any assurance on the information because the limited procedures do not provide us with sufficient evidence to express an opinion or provide any assurance.

Supplementary Information

Our audits were conducted for the purpose of forming opinions on the financial statements that collectively comprise MTS's basic financial statements. The accompanying combining schedules and the budgetary comparison schedules are presented for purposes of additional analysis and are not a required part of the basic financial statements. Such information is the responsibility of management and was derived from and relates directly to the underlying accounting and other records used to prepare the basic financial statements. The information has been subjected to the auditing procedures applied in the audit of the basic financial statements and certain additional procedures, including comparing and reconciling such information directly to the underlying accounting and other records used to prepare the basic financial statements or to the basic financial statements themselves, and other additional procedures in accordance with auditing standards generally accepted in the United States of America. In our opinion, the combining schedules and the budgetary comparison schedules are fairly stated, in all material respects, in relation to the basic financial statements as a whole.

Other Information

Management is responsible for the other information included in the annual report. The other information comprises the introductory and statistical sections but does not include the basic financial statements and our auditor's report thereon. Our opinions on the basic financial statements do not cover the other information, and we do not express an opinion or any form of assurance thereon.

In connection with our audits of the basic financial statements, our responsibility is to read the other information and consider whether a material inconsistency exists between the other information and the basic financial statements, or the other information otherwise appears to be materially misstated. If, based on the work performed, we conclude that an uncorrected material misstatement of the other information exists, we are required to describe it in our report.

Other Reporting Required by Government Auditing Standards

In accordance with *Government Auditing Standards*, we have also issued our report dated November 5, 2026, on our consideration of MTS's internal control over financial reporting and on our tests of its compliance with certain provisions of laws, regulations, contracts, and grant agreements and other matters. The purpose of that report is solely to describe the scope of our testing of internal control over financial reporting and compliance and the results of that testing, and not to provide an opinion on the effectiveness of MTS's internal control over financial reporting or on compliance. That report is an integral part of an audit performed in accordance with *Government Auditing Standards* in considering MTS's internal control over financial reporting and compliance.

San Diego, California
November 5, 2026

This page intentionally left blank.

San Diego Metropolitan Transit System
Management's Discussion and Analysis (Unaudited)
June 30, 2026 and 2025

The following discussion and analysis of the financial performance of the San Diego Metropolitan Transit System ("MTS") is intended to provide an overview of MTS's financial activities for the fiscal years ended June 30, 2026 and 2025. This information should be used in conjunction with the Letter of Transmittal, which can be found on pages i through vi of this report.

Overview of the Financial Statements

This discussion and analysis is intended to serve as an introduction to MTS's financial statements. The financial statements are comprised of two components: 1) financial statements and, 2) notes to financial statements. This report also contains other supplementary information in addition to the financial statements themselves.

Financial statements. The financial statements are designed to provide readers with a broad overview of MTS's finances, in a manner similar to a private-sector business.

The *statement of net position* presents information on all of MTS's assets, deferred outflow of resources, liabilities, and deferred inflow of resources with the difference between the four reported as net position. Over time, increases or decreases in net position may serve as a useful indicator of whether the financial position of MTS is improving or deteriorating.

The *statement of revenues, expenses and changes in net position* presents information showing how net position changed during the most recent fiscal year. All changes in net position are reported as soon as the underlying event giving rise to the change occurs, regardless of the timing of related cash flows. Thus, revenues and expenses are reported in this statement for some items that will only result in cash flows in future fiscal periods (e.g., earned but unused vacation leave).

The *statement of cash flows* presents information showing the sources and uses of cash related to operating activities, noncapital financing activities, capital and related financing activities and investing activities. In addition, the statement provides information about significant non-cash investing, capital and financing activities.

Since MTS's primary function is to provide transportation services to the region's citizens and recover costs through user fees and charges, the financial statements include business-type activities. In addition, the financial statements include not only MTS itself (*known as the primary government*), but also two legally separate transit operators: San Diego Transit Corporation (SDTC) and San Diego Trolley, Inc. (SDTI), and one legally separate freight railway, for which MTS is financially accountable: San Diego and Arizona Eastern Railway Company (SD&AE).

MTS has fiduciary responsibility over one private purpose trust fund, San Diego Transit Corporation Employee Retirement Plan, which we have also included financial statements for.

Notes to basic financial statements. The notes provide additional information that is essential to a full understanding of the data provided in the financial statements. MTS uses notes to present information in greater detail than is provided in the financial statements. They are used to explain the nature of the amounts reported and how those amounts were determined. The notes are also used to report information that is not required to be included in the financial statements.

Other information. In addition to the financial statements and accompanying notes, this report also presents certain required supplementary information concerning MTS's net pension liability and total other post-employment benefits liability for its employees. Combining statements and budget comparisons can also be found after the required supplementary information section.

Financial Summary and Detailed Analysis

As noted earlier, net position may serve over time as a useful indicator of an entity's financial stability. In the case of MTS, assets and deferred outflows of resources exceeded liabilities and deferred inflows of resources by $3,148 million at the close of the most recent fiscal year, $3,281 million at the end of FY2025 and $3,379 million at the end of FY2024.

	2026	2025	Change	2024	Change
Current and other assets	$ 600,305,821	$ 679,849,449	$ (79,543,628)	$ 469,991,704	$ 209,857,745
Noncurrent assets	67,296,399	63,043,438	4,252,961	60,528,351	2,515,087
Capital assets, net	3,098,303,724	3,162,129,739	(63,826,015)	3,281,827,887	(119,698,148)
Total assets	3,765,905,944	3,905,022,626	(139,116,682)	3,812,347,942	92,674,684
Deferred outflows of resources	42,309,088	51,752,218	(9,443,130)	68,413,443	(16,661,225)
Current and other liabilities	299,608,729	298,015,714	1,593,015	112,127,617	185,888,097
Long-term liabilities outstanding	262,560,048	293,026,036	(30,465,988)	303,433,498	(10,407,462)
Total liabilities	562,168,777	591,041,750	(28,872,973)	415,561,115	175,480,635
Deferred inflows of resources	98,009,410	84,891,859	13,117,551	86,007,363	(1,115,504)
Net position:					
Net investment in capital assets	3,081,769,387	3,148,235,380	(66,465,993)	3,266,970,484	(118,735,104)
Unrestricted	66,267,458	132,605,855	(66,338,397)	112,222,423	20,383,432
Total net position	$3,148,036,845	$3,280,841,235	$ (132,804,390)	$3,379,192,907	$ (98,351,672)

Total assets decreased by $139 million in the current year. Of this $139 million, $65 million is from decreases in both restricted and unrestricted cash. In FY2026, MTS spent $28 million in Senate Bill 125 funding that was received in FY2025 to cover costs. MTS also used $64 million in unrestricted cash (reserves) to offset the budget deficit in the current year. MTS saw a $64 million decrease in capital assets primarily due to accumulated depreciation. In FY2025, total assets increased by $93 million, due to a $187 million increase in restricted cash primarily from Senate Bill 125 funding, offset by a decrease in capital assets of $120 million primarily due to accumulated depreciation.

In the current fiscal year deferred outflows of resources decreased by $9 million due to a $10 million shift in the net difference between projected and actual earnings on pension plan investments causing these to now be reported as deferred inflows. FY2025's decrease of $17 million was also related to the difference between projected and actual earnings on pension plan investments.

In the current fiscal year, total liabilities decreased by $29 million primarily due to a $24 million decrease in the net pension liability and $9 million decrease in the total OPEB liability. The pension liability decrease stems from the plan's fiduciary net position increasing by more than the total pension liability, primarily due to net investment income on the plans totaling $50.9 million for the year. The OPEB decrease relates to a change in benefit terms for the SDTC plan where all participants are now enrolled in a Health Reimbursement Arrangement. The previous year increase of $175 million was due to a $189 million increase in unspent Senate Bill 125 restricted funding sitting in unearned revenue.

In the current fiscal year deferred inflows of resources increased by $13 million due to the same $10 million shift in projected and actual earnings on pension plan investments mentioned above as well as a $4 million increase in deferred inflows for leases related to a new 40 year infrastructure lease. In the previous year deferred inflows were flat compared to FY2024.

The balance in the overall net position decreased by $132.8 million during the current fiscal year, and decreased by $98.4 million in the prior year, details surrounding these changes are provided below.

San Diego Metropolitan Transit System
Management's Discussion and Analysis (Unaudited) (Continued)
June 30, 2026 and 2025

	2026	2025 (As Reclassified)	Change	2024 (As Reclassified)	Change
Revenues:					
Operating revenues:					
Passenger revenue	$ 70,344,643	$ 65,880,575	$ 4,464,068	$ 61,221,956	$ 4,658,619
Other operating revenue	28,437,356	26,527,899	1,909,457	21,991,939	4,535,960
Total Operating Revenue	98,781,999	92,408,474	6,373,525	83,213,895	9,194,579
Operating expenses:					
Personnel costs	188,593,493	201,569,735	(12,976,242)	189,649,892	11,919,843
Outside services	176,189,625	167,137,993	9,051,632	153,359,441	13,778,552
Transit operations funding	728,553	685,703	42,850	518,020	167,683
Materials and supplies	21,897,836	18,439,585	3,458,251	19,744,200	(1,304,615)
Energy costs	49,383,834	44,218,208	5,165,626	43,125,673	1,092,535
Risk management	20,514,076	10,126,133	10,387,943	9,575,414	550,719
Miscellaneous	10,923,226	8,055,497	2,867,729	8,518,116	(462,619)
Depreciation and amortization	200,025,211	206,186,654	(6,161,443)	207,348,755	(1,162,101)
Total Operating Expenses	668,255,854	656,419,508	11,836,346	631,839,511	24,579,997
Operating (loss)	(569,473,855)	(564,011,034)	(5,462,821)	(548,625,616)	(15,385,418)
Noncapital subsidies	312,672,948	329,360,195	(16,687,247)	355,637,701	(26,277,506)
Operating (loss) and noncapital subsidies	(256,800,907)	(234,650,839)	(22,150,068)	(192,987,915)	(41,662,924)
Nonoperating revenues (expenses):					
Public support - capital	100,081,936	128,104,597	(28,022,661)	124,603,776	3,500,821
Capital contributions, net	12,928,918	476,785	12,452,133	(636,642)	1,113,427
Investment earnings	10,123,270	11,196,698	(1,073,428)	10,483,951	712,747
Other nonoperating revenue	2,177,329	-	2,177,329	-	-
Gain (loss) on disposal of assets	(860,391)	(1,960,492)	1,100,101	(16,919,976)	14,959,484
Interest Expense	(307,404)	(288,529)	(18,875)	(344,476)	55,947
Nonoperating expense	(147,141)	(1,229,892)	1,082,751	(3,861,916)	2,632,024
Total nonoperating revenue (expense)	123,996,517	136,299,167	(12,302,650)	113,324,717	22,974,450
Changes in net position	(132,804,390)	(98,351,672)	(34,452,718)	(79,663,198)	(18,688,474)
Net position:					
Beginning of year	3,280,841,235	3,379,192,907	(98,351,672)	3,458,856,105	(79,663,198)
End of year	$3,148,036,845	$3,280,841,235	$ (132,804,390)	$3,379,192,907	$ (98,351,672)

Total revenues decreased this year by $37 million. On the capital grants side, the $28 million decrease relates to SANDAG providing $18 million in TransNet for the MidCoast trolley extension project last year and this year the expenses eligible for reimbursement were only $3 million. TDA nonoperating revenue was lower for FY2026 by $18 million and STA was down by $11 million, this was simply due to MTS utilizing the TDA and STA as noncapital subsidy in the current year. Federal revenue was also down $11 million, which primarily relates to a higher number of rolling stock deliveries received and eligible for federal funding within FY2025. All of these decreases were offset by a $35 million increase in State revenue which is primarily from $32 million in TIRCP revenue that was received to fund the orange line improvement project which upgrades stations, track signals and electrification as well as $12 million in LCTOP revenue used to purchase buses. Between FY2024 and FY2025 capital subsidies were relatively flat at a $4 million increase. This stems from the $18 million in TransNet discussed above, offset by an $11 million decrease in State revenue due to the decline in expenses eligible for TIRCP revenue. In FY2026 noncapital subsidies also decreased by $17 million from FY2025, with the largest decrease being $45 million in Federal funding now that the Federal CARES Act Covid funding was fully drawn in FY2025. This was slightly offset by the increase in TDA and STA shift to operations mentioned earlier. The non capital subsidy decrease of $26 million in the prior year was also related to CARES Act as we received $82 million in FY2024, compared to the $45 million last year that was remaining to be drawn. Passenger revenue did increase by $4+ million in both years as ridership continues to rebound after Covid.

Operating expenses increased by $12 million in FY2026. The current year saw an increase in outside services, materials and energy as higher costs are seen across the nation due to inflation. We also had increased risk management costs as insurance premiums have gone up and we had two large settlements this year. However some of the increased costs were offset by a decrease in personnel expenses due to the decreases in Pension and OPEB liabilities described earlier, as well as a decrease in depreciation expense as some of our larger assets have met their useful lives. The previous year increase in operating expenses totaling $25 million, includes an increase in outside services of $14 million primarily due to increased purchased transportation costs related to contractual increases as well as an $11 million increase in personnel costs related to increased wages from new collective bargaining agreements. While nonoperating expenses were relatively flat between 2026 and 2025, FY2024 saw a significant increase due to an analysis of fixed assets previously contributed from SANDAG were overstated leading to a large loss on disposal of assets.

Significant Capital Asset and Long-Term Financing Activity

Capital assets. The largest portion of MTS's net position reflects the investment in capital assets, net of accumulated depreciation and amortization and reduced by any outstanding borrowings and deferred inflows and outflows of resources (Net Investment in Capital Assets). Capital assets includes land, buildings, vehicles, equipment, and construction-in-progress as well as leased and subscription based assets. MTS's capital assets, net of accumulated depreciation and amortization as of June 30, 2026, 2025 and 2024 amounted to $3,098 million, $3,162 million and $3,282 million, respectively.

MTS CAPITAL ASSETS
(Net of Accumulated Depreciation and Amortization)

	2026	2025	2024
Land	$ 291,750,609	$ 270,102,306	$ 270,088,885
Buildings	2,013,550,039	2,099,019,786	2,200,710,591
Vehicles	643,024,710	654,857,767	614,084,664
Equipment & other	72,754,143	78,948,124	88,003,757
Lease assets	10,000,228	9,902,827	10,247,349
Subscription assets	5,775,474	3,312,957	3,693,011
Construction-in-progress	61,448,521	45,985,972	94,999,630
Total	$3,098,303,724	$3,162,129,739	$3,281,827,887

Major capital asset events during the current fiscal year included the following:

- MTS continues to modernize the bus fleet. In FY2026, MTS placed 79 new buses into service totaling $47 million. Of these 79 buses, 13 are standard-sized battery-electric buses purchased as part of the agency's zero emission fleet transition and 2 are pilot battery-electric vans serving as paratransit vehicles. MTS also disposed of 97 fully depreciated buses in the current year.
- MTS capitalized $26 million in signaling and rail infrastructure assets as part of the ongoing Orange Line Improvement Phase 1 project, which began in September 2025. Segment 1 and Segment 2 state-of-good-repair improvements were completed in FY2026. This improvement project resulted in $41 million of fully depreciated disposals from the original signaling and infrastructure project.
- MTS finalized the purchase of the property planned for the construction of the new Kearny Mesa Transit Center and capitalized $13 million in land.
- SANDAG contributed $13 million to MTS in FY2026. Of this amount, $8 million represents the finalized transfer of Mid-Coast Corridor light rail extension real estate from SANDAG to MTS, while the remaining $5 million was the replacement of the overhead catenary cabling system along the Green Line.
- At year end, construction-in-progress totaled $61 million, of which the largest projects were the Orange Line Rail Signal Upgrade Projects and the Electric Bus Charging Infrastructure construction project, at $19 and $11 million respectively.

- New SBITAS entered into for cloud computer and virtualization and one to equip all non-revenue vehicles with cameras.

Both leases and SBITAs are intangible, right to use assets. MTS does not own these assets, they only have the right to use them in operations under the contracted terms. In addition to the intangible assets, a corresponding liability is also recognized. Additional information on MTS's capital, lease and subscription assets can be found in Note 5 to the financial statements.

Long-term liabilities. MTS has no outstanding bonds or notes payable. Long-term financing obligations consist of lease liabilities of $10.6 million, $10.3 million, and $10.6 million and subscription liabilities of $4.0 million, $3.0 million, and $2.9 million at June 30, 2026, 2025, and 2024, respectively. Additional information can be found in Note 8 to the financial statements.

Currently Known Facts, Decisions or Conditions

MTS is aware of the following items that will impact future financial reports:

- Economic developments
  - Recurring subsidy revenues are expected to stay relatively flat next year with TransNet sales tax receipts increasing by 2.1%, TDA sales tax receipts increasing by 1.0% and STA revenue decreasing by 4.6%.
- Increased revenue
  - MTS raised fares on October 1, 2026. The agency is expecting these new fares to increase passenger revenue by $3.7 million in FY2027.
  - MTS's fare system now escheats stored value from cards that have not had any activity within the past 3 years. We are expecting $2 million in escheatment revenue this year.
  - Low Carbon Fuel Standard (LCFS) credits are rebounding after historically low rates. If prices hold, we expect to receive $2 million more in energy credit revenue in FY2027.
- Expected changes in budgetary net position
  - The FY2027 structural deficit of $102.2 million is being balanced with $50 million of TDA revenue shifting from CIP to operations as well as $52.3 million of non-recurring SB125 revenue. With these non-recurring and internal fund shifts, we do not expect a material impact to the budgetary net position.
- Postemployment benefits
  - In February 2026, the MTS Board of Directors approved a change to the SDTC Pension Plan's Unfunded Actuarial Liability (UAL) amortization policy. The new policy combines all layers from the July 1, 2024 valuation date into one consolidated layer with a closed 20 year period. Subsequent changes to the UAL are amortized over separate 10 year periods. This change will reduce MTS' actuarial required contribution by $5.4 million in FY2027.
  - With the shift in TDA from capital to operations discussed in an earlier bullet, MTS will need to be more selective and accurate with the CIP funding plan. This shift of revenue will not impact MTS's state of good repair program.

- New legislation
    - California Senate Bill 122, effective January 1, 2027 expands California sales and use tax to software and Software as a Service, regardless of delivery type. While the current impacts are unknown, it does have potential to impact both expenses and sales tax revenue for MTS.
    - The current federal surface transportation authorization is the Infrastructure Investment and Jobs Act (IIJA), enacted in November 2021. The IIJA provides framework, funding levels and policy direction for most federal highway, transit, rail, safety and freight programs, including sections 5307, 5337 and 5339 formula funds which MTS heavily rely on. The IIJA was set to expire on September 30th, 2026, however a short-term extension was passed on September 2, 2026 to extend it to December 11, 2026. Funding levels and other policy changes are currently being negotiated, with potential major impacts to available formula transit funding, though the impact is unknown at this time.

Requests for Information

This financial report is designed to provide a general overview of MTS's finances for all those with an interest in the government's finances. If you have questions concerning any of the information provided in this report or need additional financial information, visit our website at www.sdmts.com or direct inquiries to the Controller, MTS, 1255 Imperial Avenue, Suite 1000, San Diego, CA 92101.

BASIC FINANCIAL STATEMENTS

This page intentionally left blank.

PRIMARY GOVERNMENT

San Diego Metropolitan Transit System
Statements of Net Position
June 30, 2026 and 2025

	2026	2025
ASSETS		
Current assets:		
Cash, cash equivalents, and investments	$ 210,830,786	$ 250,604,231
Cash, cash equivalents, and investments restricted for capital support	195,626,804	221,058,392
Accounts and other receivables	17,289,048	21,035,148
Due from other governments	122,366,602	137,475,917
Lease receivable	2,401,474	2,516,670
Inventory	45,691,106	43,185,419
Prepaid items and other current assets	6,100,001	3,973,672
Total current assets	600,305,821	679,849,449
Noncurrent assets:		
Lease receivable, due in more than one year	67,296,399	63,043,438
Capital assets, net	3,098,303,724	3,162,129,739
Total noncurrent assets	3,165,600,123	3,225,173,177
Total assets	3,765,905,944	3,905,022,626
DEFERRED OUTFLOWS OF RESOURCES		
Pension-related deferred outflows of resources	38,015,398	46,628,928
OPEB-related deferred outflows of resources	4,293,690	5,123,290
Total deferred outflows of resources	42,309,088	51,752,218
LIABILITIES		
Current liabilities:		
Accounts payable	45,934,899	29,598,034
Due to other governments	2,742,219	1,904,388
Unearned revenue	218,006,347	236,919,590
Accrued expenses	4,683,791	4,366,959
Retentions payable	2,033,207	524,301
Retentions payable from restricted assets	308,589	1,934,753
Due within one year:		
Aggregate total OPEB liability	887,023	1,677,900
Lease liability	287,971	268,925
Subscription liability	1,139,262	1,049,849
Compensated absences payable	11,098,214	10,444,249
Accrued damage, injury, and employee claims	12,487,207	9,326,766
Total current liabilities	299,608,729	298,015,714
Noncurrent liabilities:		
Due in more than one year:		
Lease liability	10,262,761	10,070,615
Subscription liability	2,811,136	1,980,669
Compensated absences	2,412,669	2,747,951
Accrued damage, injury, and employee claims	20,508,466	19,916,646
Aggregate net pension liabilities	195,059,416	218,740,575
Aggregate total OPEB liabilities	31,505,600	39,569,580
Total noncurrent liabilities	262,560,048	293,026,036
Total liabilities	562,168,777	591,041,750
DEFERRED INFLOWS OF RESOURCES		
Pension-related deferred inflows of resources	9,665,829	516,113
OPEB-related deferred inflows of resources	19,834,366	19,321,955
Lease-related deferred inflows of resources	68,509,215	65,053,791
Total deferred inflows of resources	98,009,410	84,891,859
NET POSITION		
Net investment in capital assets	3,081,769,387	3,148,235,380
Unrestricted	66,267,458	132,605,855
Total net position	$ 3,148,036,845	$ 3,280,841,235

See accompanying notes to basic financial statements.

San Diego Metropolitan Transit System
Statements of Revenues, Expenses, and Changes in Net Position
For the Years Ended June 30, 2026 and 2025

	2026	2025 (As Reclassified)
Operating Revenues:		
Passenger revenue	$ 70,344,643	$ 65,880,575
Advertising	3,966,738	4,046,154
Miscellaneous	24,470,618	22,481,745
Total operating revenues	98,781,999	92,408,474
Operating Expenses:		
Personnel costs	188,593,493	201,569,735
Outside services	176,189,625	167,137,993
Transit operations funding	728,553	685,703
Materials and supplies	21,897,836	18,439,585
Energy costs	49,383,834	44,218,208
Risk management	20,514,076	10,126,133
Miscellaneous	10,923,226	8,055,497
Depreciation and amortization	200,025,211	206,186,654
Total operating expenses	668,255,854	656,419,508
Operating (loss)	(569,473,855)	(564,011,034)
Noncapital Subsidies:		
Federal revenue	79,493,097	124,583,699
Transportation Development Act (TDA) funds	111,570,626	97,120,058
State Transit Assistance (STA) funds	17,079,262	8,146,048
State revenue - Other	16,695,068	9,205,223
TransNet Funds	83,835,010	79,465,206
Other local subsidies	3,999,885	10,839,961
Total noncapital subsidies	312,672,948	329,360,195
Operating (loss) and noncapital subsidies	(256,800,907)	(234,650,839)
Nonoperating Revenues (Expenses):		
Federal revenue - capital	13,621,302	24,967,654
Transportation Development Act (TDA) funds - capital	23,160,693	41,177,702
State Transit Assistance (STA) funds - capital	14,100,156	25,409,013
STA State of Good Repair - capital	2,623,015	8,105,777
State revenue - other capital	43,987,148	8,775,180
TransNet Funds - capital	2,589,622	17,677,739
Other local subsidies - capital	-	1,991,532
Capital contributions, net	12,928,918	476,785
Investment earnings	10,123,270	11,196,698
Interest expense	(307,404)	(288,529)
Gain (loss) on disposal of assets	(860,391)	(1,960,492)
Other nonoperating revenue	2,177,329	-
Other nonoperating expenses	(147,141)	(1,229,892)
Total nonoperating revenues (expenses)	123,996,517	136,299,167
Changes in net position	(132,804,390)	(98,351,672)
Net Position:		
Beginning of year	3,280,841,235	3,379,192,907
End of year	$ 3,148,036,845	$ 3,280,841,235

See accompanying notes to basic financial statements.

San Diego Metropolitan Transit System
Statements of Cash Flows
For the Years Ended June 30, 2026 and 2025

	2026	2025
Cash Flows From Operating Activities:		
Receipts from customers and users	$ 103,840,000	$ 86,225,544
Payments to suppliers	(266,096,268)	(253,617,463)
Payments to employees	(197,582,020)	(190,836,368)
Payments for damage and injury	(8,586,395)	(4,390,606)
Net cash (used in) operating activities	(368,424,683)	(362,618,893)
Cash Flows From Noncapital Financing Activities:		
Public support funds received	414,103,673	623,991,570
Net cash provided by noncapital financing activities	414,103,673	623,991,570
Cash Flows From Capital and Related Financing Activities:		
Property acquisition	(119,961,186)	(91,992,413)
Proceeds from disposal of assets	114,647	673,531
Net cash (used in) capital and related financing activities	(119,846,539)	(91,318,882)
Cash Flows From Investing Activities:		
Interest received on investments	8,962,516	7,382,657
Net cash provided by investing activities	8,962,516	7,382,657
Net increase (decrease) in cash, cash equivalents, and investments	(65,205,033)	177,436,452
Cash, Cash Equivalents, and Investments:		
Beginning of year	471,662,623	294,226,171
End of year	$ 406,457,590	$ 471,662,623
Reconciliation of Cash, Cash Equivalents, and Investments to Statements of Net Position:		
Cash, cash equivalents, and investments	$ 210,830,786	$ 250,604,231
Cash, cash equivalents, and investments restricted for capital support	195,626,804	221,058,392
Total cash, cash equivalents, and investments	$ 406,457,590	$ 471,662,623

See accompanying notes to basic financial statements.

San Diego Metropolitan Transit System
Statements of Cash Flows (Continued)
For the Years Ended June 30, 2026 and 2025

	2026	2025
Reconciliation of Operating (Loss) to Net Cash (Used In) Operating Activities:		
Operating (loss)	$ (569,473,855)	$ (564,011,034)
Adjustments to reconcile operating (loss) to net cash (used in) operating activities:		
Depreciation and amortization	200,025,211	206,186,654
(Increase) decrease in:		
Accounts and other receivables	3,746,100	(4,616,667)
Due from other governments	378,134	(2,322,553)
Inventory	(2,505,687)	439,025
Prepaid items and other current assets	(2,126,329)	(27,671)
Increase (decrease) in:		
Accounts payable	7,092,387	(5,053,747)
Due to other governments	738,304	(141,746)
Accrued expenses	316,831	(136,017)
Unearned revenue	1,631,258	1,113,722
Aggregate net pension liability	(5,917,913)	4,786,344
Aggregate total OPEB liability	(7,512,846)	(273,263)
Compensated absences	318,683	489,103
Accrued damage, injury and employee claims	4,865,039	948,957
Total adjustments	201,049,172	201,392,141
Net cash (used in) operating activities	$ (368,424,683)	$ (362,618,893)
Noncash Investing, Capital, and Financing Activities:		
Contributions of capital assets and inventory parts from SANDAG	$ 12,928,918	$ 476,785
Lease assets added	$ 494,495	$ 27,559
Lease liabilities added	$ (494,495)	$ (27,559)
Subscription assets added	$ 4,446,694	$ 1,001,431
Subscription liabilities added	$ (4,446,694)	$ (1,001,431)
Retention held at year end not from restricted cash	$ (2,033,207)	$ (524,301)
Increase (decrease) in fair value of investments	$ (88,112)	$ 91,292

See accompanying notes to basic financial statements.

This page intentionally left blank.

FIDUCIARY FUND

San Diego Metropolitan Transit System
Statements of Fiduciary Net Position
June 30, 2026 and 2025

	San Diego Transit Corporation Employee Retirement Plan Pension Trust Fund	
ASSETS	**2026**	**2025**
Investments, at fair value:		
Common stocks	$ 43,196,974	$ 50,287,539
Mutual funds	57,244,851	62,827,350
Corporate debt / Bond funds	120,409,214	64,979,272
Short-term investment funds	751,581	30,205,749
Total investments	221,602,620	208,299,910
Receivables:		
Dividends and interest	163,084	109,710
Other receivables	42,701	5,379
Total receivables	205,785	115,089
Total assets	221,808,405	208,414,999
LIABILITIES		
Due to plan sponsor	415,843	450,085
Other payables	69,078	88,845
Total liabilities	484,921	538,930
NET POSITION		
Net position restricted for plan benefits	$ 221,323,484	$ 207,876,069

See accompanying Notes to the Financial Statements.

San Diego Metropolitan Transit System
Statements of Changes in Fiduciary Net Position
For the Years Ended June 30, 2026 and June 30, 2025

	San Diego Transit Corporation Employee Retirement Plan Pension Trust Fund	
ADDITIONS:	**2026**	**2025**
Contributions:		
Employer	$ 19,519,107	$ 18,430,690
Employee	1,923,620	1,740,617
Total contributions	21,442,727	20,171,307
Investment income:		
Interest	804,697	1,168,511
Dividends	5,844,159	4,914,600
Net realized and unrealized gains on investments	9,857,642	13,036,554
Total investment income	16,506,498	19,119,665
Investment expense	(134,309)	(215,776)
Net investment income	16,372,189	18,903,889
Total additions to fiduciary net position	37,814,916	39,075,196
DEDUCTIONS:		
Distributions to participants	24,058,068	23,878,520
Administrative expenses	309,433	265,370
Total deductions from fiduciary net position	24,367,501	24,143,890
NET INCREASE IN FIDUCIARY NET POSITION	13,447,415	14,931,306
NET POSITION RESTRICTED FOR PLAN BENEFITS:		
Beginning of year	207,876,069	192,944,763
End of year	$ 221,323,484	$ 207,876,069

See accompanying Notes to the Financial Statements.

This page intentionally left blank.

NOTES TO THE BASIC FINANCIAL STATEMENTS

This page intentionally left blank.

San Diego Metropolitan Transit System
Index to the Notes to the Basic Financial Statements
For the Years Ended June 30, 2026 and 2025

Page

Note 1 – Summary of Significant Accounting Policies
- A. Reporting Entity ... 27
- B. Financial Statements ... 29
- C. Measurement Focus, Basis of Accounting, and Financial Statement Presentation ... 29
- D. Use of Restricted/Unrestricted Assets ... 32
- E. Cash, Cash Equivalents, and Investments ... 32
- F. Inventory ... 33
- G. Prepaid Items and Other Assets ... 33
- H. Leases ... 33
- I. Subscription-Based Information Technology Arrangements (SBITAs) ... 35
- J. Capital Assets ... 36
- K. Construction-in-Progress ... 36
- L. Compensated Absences ... 36
- M. Pension ... 37
- N. Other Postemployment Benefits ... 37
- O. Net Position ... 37
- P. Use of Estimates ... 38
- Q. Implementation of New GASB Pronouncements for the Year Ended June 30, 2026 ... 38

Note 2 – Cash, Cash Equivalents, and Investments
- A. Primary Government ... 39
- B. Fiduciary Fund ... 43

Note 3 – Receivables
- A. Accounts and Other Receivables ... 48
- B. Due from Other Governments ... 49
- C. Lease Receivable and Related Deferred Inflows of Resources ... 49

Note 4 – Inventory ... 51

Note 5 – Capital Assets ... 51

Note 6 – Due to Other Governments ... 53

Note 7 – Unearned Revenue ... 54

Note 8 – Long-Term Liabilities
- A. Summary ... 54
- B. Lease Liability ... 56
- C. Subscription Liability ... 56

Note 9 – Risk Management ... 57

Note 10 – Commitments and Contingencies ... 58

Note 11 – Other Postemployment Benefits ... 58

San Diego Metropolitan Transit System
Index to the Notes to the Basic Financial Statements (Continued)
For the Years Ended June 30, 2026 and 2025

Page

Note 12 – Employee Retirement Systems
A. Summary 64
B. MTS 66
C. SDTI 73
D. SDTC 83

Note 13 – Other Required Individual Disclosures
A. Deficit Net Position 89

Note 14 – Net Investment in Capital Assets 90

Note 15 – Change in Accounting Principle – GASB 103 Reclassification 90

Note 16 – Other Non-Operating Expenses 91

Note 17 – Subsequent Events 91

Note 1 – Summary of Significant Accounting Policies

The accompanying basic financial statements of the San Diego Metropolitan Transit System ("MTS") have been prepared in conformity with accounting principles generally accepted in the United States of America ("U.S. GAAP") as applied to governmental units. The Governmental Accounting Standards Board ("GASB") is the accepted standard-setting body for establishing governmental accounting and financial reporting standards. The more significant of MTS's accounting policies are described below.

A. Reporting Entity

Primary Government

MTS was formed on January 26, 1976 by passage of California Senate Bill 101 to plan, construct, and operate (or let contracts to operate) exclusive public mass transit guideways in the urbanized south coastal area of San Diego County. MTS has certain responsibilities for near-term transportation planning and administration of federal and state transportation funds within the area under its jurisdiction. The Board of Directors consists of 15 members composed of four appointees from the City of San Diego (the Mayor and three Council Members), two appointees from the City of Chula Vista (the Mayor and one Council Member), one appointee from the cities of Coronado, El Cajon, Imperial Beach, La Mesa, Lemon Grove, National City, Poway, and Santee, and one appointee from the San Diego County Board of Supervisors.

On January 1, 2003, California Senate Bill 1703 (SB 1703) became effective. SB 1703 required the consolidation of the planning and programming functions of MTS and the North County Transit District ("NCTD") into the San Diego Association of Governments ("SANDAG") in an initial transfer to take place prior to July 1, 2003. SB 1703 also required the consolidation of certain project development and construction functions of MTS and NCTD into SANDAG in a subsequent transfer to take place prior to January 30, 2004. The initial transfer occurred on July 1, 2003, and the subsequent transfer occurred on October 13, 2003. With these actions, employees were transferred from MTS and NCTD to SANDAG, and certain planning, development, and construction functions were also transferred. As a result, MTS's activities since the consolidation have been focused on operating public transit systems in the urbanized area identified above. In addition to the consolidation required by SB 1703, MTS dissolved the independent Board of Directors of San Diego Transit Corporation ("SDTC") and Board of Directors of San Diego Trolley, Inc. ("SDTI"). MTS now acts as the Board of Directors for all three agencies: MTS, SDTC, and SDTI. Beginning in FY2004, SDTC and SDTI are presented as blended component units.

These basic financial statements present MTS and its legally separate component units, entities for which MTS is considered to be financially accountable. Because MTS appoints a majority of the component units' boards of directors, the boards are substantively the same, and MTS is able to impose its will on the component units, MTS presents blended component units. Blended component units, although legally separate entities, are, in substance, part of MTS's operations. Included within the reporting entity as blended component units:

San Diego Transit Corporation: On July 1, 1985, MTS purchased the assets used by and acquired sole ownership of San Diego Transit Corporation (SDTC) from the City of San Diego for $1. SDTC has entered into an operating agreement with MTS to operate a public transportation bus system in the City of San Diego and certain regional routes within MTS's jurisdictions. The current agreement, which was approved in December 2006, was renewed on June 23, 2011, as an open-ended agreement terminable upon six months' notice by either party. SDTC continues to provide local service to a number of adjoining cities under pre-existing contracts. Purchases or construction of bus capital items are made by MTS, with whom title remains, and are contributed to SDTC upon completion of a project or when individually purchased by MTS. SDTC's assets, deferred outflows, liabilities, deferred inflows, net position, revenues, and expenses are included in MTS's financial statements as a blended component unit. This agency has the same governing board as MTS and provides services directly to the public.

Note 1 – Summary of Significant Accounting Policies (Continued)

A. Reporting Entity (Continued)

Primary Government (Continued)

San Diego Trolley, Inc.: San Diego Trolley, Inc. (SDTI) was organized by MTS in August 1980. SDTI was created to operate and maintain the Light Rail Transit ("LRT") system pursuant to an operating agreement with MTS. The current agreement, which was approved in December 2006, was renewed on June 23, 2011, as an open-ended agreement terminable upon six months' notice by either party. Purchases or construction of LRT capital items are made by MTS, with whom title remains, and are contributed to SDTI upon completion of a project or when individually purchased by MTS. SDTI's assets, deferred outflows, liabilities, deferred inflows, net position, revenues, and expenses are included in MTS's financial statements as a blended component unit. This agency has the same governing board as MTS and provides services directly to the public.

San Diego and Arizona Eastern Railway Company: MTS purchased the San Diego and Arizona Eastern Railway Company (SD&AE) in 1979. SDTI operates on a portion of the line and private operators provide freight service on a portion of the line. Purchases of capital items are made by MTS, with whom title remains, and are contributed to SD&AE. Since SD&AE provides almost exclusive benefit to MTS, its assets, deferred outflows, liabilities, deferred inflows, net position, revenues, and expenses are included in MTS's financial statements as a blended component unit. Separate financial reports are not available.

Fiduciary Activities

MTS presents its fiduciary activity information for assessing its accountability and financial reporting in their role as fiduciaries. The definition of a "fiduciary" is:

- The organization acts on behalf of another person or persons to manage assets;
- Fiduciary responsibility refers to the obligation that one party has in relationship with another one to act entirely on the other party's behalf and best interest. It is considered to be the standard of the highest care.

Included within the reporting entity as fiduciary activities is the following:

San Diego Transit Corporation Employee Retirement Plan: The San Diego Transit Corporation Employee Retirement Plan (the "Plan") is a defined benefit plan which provides retirement and disability benefits and annual cost-of-living adjustments for Plan members, as well as joint-survivor benefits to beneficiaries. Prior to May 1, 2011, all of San Diego Transit Corporation's (SDTC) full-time employees and certain part-time noncontract employees who had completed one year of service in which they had worked at least 1,000 hours of service, and certain part-time contract employees participated in the Plan. Effective May 1, 2011, employees in the International Brotherhood of Electrical Workers, Local 465 (the "IBEW") bargaining unit hired after May 1, 2011 participate in a separate defined contribution 401(a) plan. Effective November 1, 2012, employees in the Amalgamated Transit Union, Local 1309 (the "ATU") bargaining unit hired after November 1, 2012 participate in a separate defined contribution 401(a) plan. Therefore, as of November 1, 2012, the Plan was closed to new ATU and IBEW entrants. Upon agreement between the employer and the Union, certain modifications can be made to the Plan.

The Plan is managed by Retirement Boards which have plenary authority and fiduciary responsibility for the investment of Plan assets and administration of the Plan. The IBEW Retirement Board consists of three members from the San Diego Metropolitan Transit System ("MTS") and three members from the IBEW. The ATU Retirement Board consists of three members from MTS and three members from the ATU. The Noncontract Retirement Board consists of three members from MTS.

Note 1 – Summary of Significant Accounting Policies (Continued)

A. Reporting Entity (Continued)

Fiduciary Activities *(Continued)*

SDTC is a component unit of MTS. The Plan is administered and sponsored by MTS.

SDTC is required to contribute the difference between the actuarially determined rate and the contribution rate of plan members.

The Plan is funded entirely by SDTC for employees under the IBEW bargaining units who were hired prior to May 1, 2011 and the ATU bargaining units who were hired prior to November 1, 2012. IBEW employees are required to contribute, 3% of their covered payroll from March 31, 2013 through April 6, 2014, 4% of their covered payroll from April 6, 2014 through April 4, 2015, increasing to 6% from April 5, 2015 through April 2, 2016, and to 8% thereafter. ATU employees are required to contribute 3% after July 1, 2013 and 5% after July 1, 2014, 6% after May 17, 2015, 7% after July 1, 2016 and 8% after December 1, 2017.

B. Financial Statements

Primary Government – The financial statements (i.e., the statement of net position, the statement of revenues, expenses, and changes in net position, and the statement of cash flows) report information on all of the activities of MTS and its blended component units. MTS reports as a single enterprise fund. Nonoperating revenues and expenses consist of subsidies received and provided, revenues and expenses related to financing, resources from the disposal of capital assets and inventory, and investment income and expenses. All other revenues and expenses are reported as operating. Noncapital subsidies, which are resources received to help keep passenger fares lower and that are not restricted to capital purposes, are reported immediately after operating income (loss), followed by a subtotal for operating income (loss) and noncapital subsidies. Capital subsidies, capital contributions, and other nonoperating revenues and expenses are then reported to arrive at the change in net position.

Fiduciary Activities – The Fiduciary Fund Financial Statements (i.e., the statement of fiduciary net position and the statement of changes in fiduciary net position) report information on the activities of the San Diego Transit Corporation Employees Retirement Plan pension trust fund. The statement of changes in fiduciary net position demonstrates the degree to which the additions to net position restricted for plan benefits were sufficient to cover deductions for distributions to plan participants and administrative expenses. Capital subsidies, capital contributions, and other nonoperating revenues and expenses are then reported to arrive at the change in net position.

C. Measurement Focus, Basis of Accounting, and Financial Statement Presentation

Primary Government – The Financial Statements are reported using the *"economic resources"* measurement focus and the accrual basis of accounting. Revenues are recorded when earned and expenses are recorded when a liability is incurred, regardless of the timing of related cash flows. Grants and similar items are recognized as revenue as all eligibility requirements have been met. Interest associated with the current fiscal period is considered to be susceptible to accrual and so has been recognized as revenue of the current fiscal period.

Fiduciary Activities – This fiduciary pension trust fund is a defined benefit plan which provides retirement and disability benefits and annual cost-of-living adjustments for Plan members and joint-survivor benefits to beneficiaries. The Plan's financial statements are prepared using *"economic resources"* measurement focus and the accrual basis of accounting. Employer contributions are recognized in the period in which the contributions are due and when the employer has made a formal commitment to provide the contributions. Investment income is recognized as earned. Benefits are recognized when due and payable in accordance with the terms of the Plan.

Note 1 – Summary of Significant Accounting Policies (Continued)

C. Measurement Focus, Basis of Accounting, and Financial Statement Presentation (Continued)

In accordance with GASB Statement No. 63, *Financial Reporting of Deferred Outflows of Resources, Deferred Inflows of Resources, and Net Position*, the Statement of Net Position reports separate sections for Deferred Outflows of Resources, and Deferred Inflows of Resources, when applicable.

Deferred Outflows of Resources represent a consumption of net assets that applies to future periods and that, therefore, will not be recognized as an expense until that time.

Deferred Inflows of Resources represent an acquisition of net assets that applies to future periods and that, therefore, will not be recognized as revenue until that time.

MTS receives funding primarily from the following revenue sources:

Passenger Revenue
Passenger fares comprised approximately 15 percent and 17 percent of MTS's $471.1 million and $448.2 million operating budgets for FY2026 and FY2025 respectively.

Other Operating Revenues
MTS receives a variety of operating revenues that are not received directly from passenger fares. The sources of these revenues are advertising, naming rights, energy credits, rental and land management income, income related to For Hire Vehicle administration, income from the SD&AE Railway Company, and other miscellaneous income.

Noncapital Subsidies
MTS receives noncapital subsidies without a direct exchange of goods or services. These subsidies help to keep passenger fares down and are not restricted to capital asset acquisition.

Nonoperating Revenues
MTS receives subsidies that are derived from federal, state and local tax revenues. MTS does not levy or collect any tax funds, but receives allocated portions of tax funds through federal, state and local granting agencies.

Federal Transit Administration (FTA)
FTA revenues are funded by a federal gas tax and revenues of the federal general fund. On November 15, 2021, the Bipartisan Infrastructure Law was signed, reauthorizing surface transportation programs through Federal FY (FFY) 2026. The legislation establishes the legal authority to commence and continue FTA programs. Each reauthorization amends the Federal Transit Laws codified in 49 USC Chapter 53. FTA funding is structured on a reimbursement basis (after expenses are incurred), and funds both the CIP and operating budgets. The reauthorization provides for the following funding streams MTS commonly receives:

- 5307 Urban Area Formula Grants for capital improvements and preventive maintenance
- 5337 State of Good Repair Funding for capital improvements and preventive maintenance
- 5339 Bus and Bus Facilities Funding for capital improvements
- 5311 Formula Grants for Rural Areas Funding for rural service operations
- 5311(f) Inter-City Bus Program Funding for rural service operations connecting to inter-city network
- 5310 Enhanced Mobility of Seniors & Individuals with Disabilities for Americans with Disabilities Act (ADA) capital improvements

Note 1 – Summary of Significant Accounting Policies (Continued)

C. Measurement Focus, Basis of Accounting, and Financial Statement Presentation (Continued)

Transportation Development Act (TDA)
TDA provides funding for public transit operators. This state fund is one quarter of a percent of the 7.75 percent sales tax assessed in the region. SANDAG is responsible for apportionment of these funds within the San Diego region.

State Transit Assistance (STA)
STA funding comes from the Public Transportation Act (PTA) which derives its revenue from the state sales tax on diesel fuels. These funds are appropriated by the legislature with a formula based upon population and local revenue generated. This funding was augmented by the Road Repair and Accountability Act of 2017, or SB1, which was signed by the Governor on April 28, 2017.

STA State of Good Repair Program (SGR)
The SGR Program is a supplemental STA funding source as a result of SB 1 and is funded from a portion of a new Transportation Improvement Fee on vehicle registrations due on or after January 1, 2018. The funds are allocated with the same STA Program formula.

TransNet
TransNet funds are derived from the Proposition A one-half cent local transportation sales tax that was approved by area voters in November 1987. The original ordinance expired in 2008, but has since been extended to 2048 by subsequent voter approval. The ordinance allocated one-third of the sales tax proceeds for transit purposes, which are further divided between MTS and NCTD based on the proportion of the population within the area of each jurisdiction. The *TransNet* Program also reimburses MTS for the net operating cost of the MidCoast Trolley Extension, Bus Rapid Transit and Superloop projects that were approved as part of the extension. These costs are billed to SANDAG on a monthly basis. *TransNet* funds are also apportioned by SANDAG.

SB 125 Formula-Based Transit and Intercity Rail Capital Program (TIRCP) & Zero-Emission Transit Capital Program (ZETCP)
SB125 amended the Budget Act of 2023 to appropriate $4 billion of General Funds to TIRCP. The original legislation approved funding over two fiscal years, but the State of California FY2025 budget amended that to FY2024-2026. SB 125 also establishes a $1.1 billion Zero-Emission Transit Capital Program (ZETCP) over four fiscal years, FY2024-2027. In FY2026, MTS earned $28.1 million and has recognized $50.0 million in total.

Transit and Intercity Rail Capital Program (TIRCP)
The TIRCP is a discretionary program that was created by SB 862 (Chapter 36, Statutes of 2014) and modified by SB 9 (Chapter 710, Statutes of 2015) to provide grants from the Greenhouse Gas Reduction Fund to fund transformative capital improvements that will modernize California's intercity, commuter, and urban rail systems, and bus and ferry transit systems to reduce emissions of greenhouse gases by reducing congestion and vehicle miles traveled throughout California. MTS currently has two open TIRCP Grants totaling $73.6 million. In FY2026, MTS recognized $20.7 million, bringing the total earned to $59.8 million.

Low Carbon Transit Operations Program (LCTOP)
The Low Carbon Transit Operations Program (LCTOP) is one of several programs that are part of the Transit, Affordable Housing, and Sustainable Communities Program established by the California Legislature in 2014 by SB 862. The LCTOP was created to provide operating and capital assistance for transit agencies to reduce greenhouse gas emission and improve mobility, with a priority on serving disadvantaged communities.

Note 1 – Summary of Significant Accounting Policies (Continued)

C. Measurement Focus, Basis of Accounting, and Financial Statement Presentation (Continued)

Low Carbon Transit Operations Program (LCTOP) (Continued)
Approved projects in LCTOP will support new or expanded bus or rail services, expand intermodal transit facilities, and may include equipment acquisition, fueling, maintenance and other costs to operate those services or facilities, with each project reducing greenhouse gas emissions. SB 862 appropriated five percent of the annual auction proceeds in the Greenhouse Gas Reduction Fund for LCTOP. Starting in FY2027, SB840 transitioned the allocation from variable percentage-based to fixed annual statutory commitments.

Other Local Subsidies
The City of San Diego provides Maintenance of Effort funds to aid ADA efforts. SANDAG provides funding, funded through FasTrak tolls, to operate services along the Interstate 15 corridor. The University of California, San Diego (UCSD) provides funding for shuttle services that expand frequency and span on MTS routes 201 and 202 between the La Jolla Colony area and the Gilman Transit Center on the UCSD campus.

D. Use of Restricted/Unrestricted Assets

When both restricted and unrestricted resources are available for use, it is MTS's policy to use restricted resources first, then unrestricted resources as they are needed.

E. Cash, Cash Equivalents, and Investments

Investments of pooled cash consist primarily of pooled investment funds, liquidity funds and governmental bonds. Investments are stated at fair value, which is based on quoted market price. Money market investments and participating interest earning investment contracts that have a remaining maturity at the time of purchase of one year or less are reported at amortized cost, which approximates fair value.

For purposes of the statement of cash flows, all highly liquid temporary investments purchased with a maturity of three months or less are considered cash equivalents.

MTS participates in an investment pool managed by the State of California titled Local Agency Investment Fund (LAIF), which has invested a portion of the pool funds in structured notes and asset–backed securities. LAIF's investments are subject to credit risk with the full faith and credit of the State of California collateralizing these investments. In addition, these structured notes and asset–backed securities are subject to market risk and to change in interest rates. The reported value of the pool is the same as the fair value of the pool shares. MTS also participates in the San Diego County Treasurer's Pooled Money Fund, which is a local government investment pool managed by the County Treasurer's Office on behalf of the Investment Pool participants.

Certain disclosure requirements, if applicable for deposit and investment risk, are specified for the following areas:

- Interest Rate Risk
- Credit Risk
  - Overall
  - Custodial Credit Risk
  - Concentration of Credit Risk
- Foreign Currency Risk

Note 1 – Summary of Significant Accounting Policies (Continued)

E. Cash, Cash Equivalents, and Investments (Continued)

GASB Statement No. 72, *Fair Value Measurement and Application*, defined fair value, established a framework for measuring fair value and established disclosures about fair value measurement. Investments, unless otherwise specified, recorded at fair value in the Statements of Net Position, are categorized based upon the level of judgement associated with the inputs used to measure their fair value. Levels of inputs are as follows:

Level 1 – Inputs are unadjusted, quoted prices for identical assets and liabilities in active markets at the measurement date.

Level 2 – Inputs, other than quoted prices included in Level 1, that are observable for the asset or liability through corroboration with market data at the measurement date.

Level 3 – Unobservable inputs that reflect management's best estimate of what market participants would use in pricing the asset or liability at the measurement date.

F. Inventory

Inventories are valued at the lower of weighted average cost or net realizable value. Management periodically reviews inventory for excess and obsolete items.

G. Prepaid Items and Other Assets

Payments made to vendors for services that will benefit periods beyond the fiscal year end are recorded as prepaid items.

H. Leases

Lessee

MTS has a policy to recognize a lease liability and a right-to-use lease asset (lease asset) in our financial statements with an initial, individual value of $10,000 or more with a lease term greater than one year. Variable payments based on future performance or usage of the underlying assets are not included in the measurement of the lease liability.

At the commencement of a lease, the lease liability is measured at the present value of payments expected to be made during the lease term. Subsequently, the lease liability is reduced by the principal portion of lease payments made.

Lease assets are recorded at the amount of the initial measurement of the lease liabilities and modified by any lease payments made to the lessor at or before the commencement of the lease term, less any lease incentives received from the lessor at or before the commencement of the lease term along with any initial direct costs that are ancillary charges necessary to place the lease assets into service. Lease assets are amortized using the straight–line method over the shorter of the lease term or the useful life of the underlying asset, unless the lease contains a purchase option that MTS has determined is reasonably certain of being exercised. In this case, the lease asset is amortized over the useful life of the underlying asset.

Note 1 – Summary of Significant Accounting Policies (Continued)

H. Leases (Continued)

Lessee (Continued)

Key estimates and judgments related to leases include how MTS determines (1) the discount rate it uses to discount the expected lease payments to present value, (2) lease term, and (3) lease payments.

- MTS uses the interest rate charged by the lessor as the discount rate. When the interest rate charged by the lessor is not provided, MTS generally uses its estimated incremental borrowing rate as the discount rate for leases.

- The lease term includes the noncancelable period of the lease, plus any option periods that are reasonably certain to be exercised.

- Lease payments included in the measurement of the lease liability are composed of fixed payments and purchase option price that MTS is reasonably certain to exercise. MTS monitors changes in circumstances that would require a remeasurement of a lease and will remeasure any lease asset and liability if certain changes occur that are expected to significantly affect the amount of the lease liability.

Lease assets are reported as right-to-use along with other capital assets and lease liabilities are reported on the statement of net position.

Lessor

MTS is a lessor for leases of buildings, billboards, and land and recognizes leases receivable and deferred inflows of resources in the financial statements. Variable payments based on future performance or usage of the underlying asset are not included in the measurement of the lease receivable.

At the commencement of a lease, the lease receivable is measured at the present value of payments expected to be received during the lease term. Subsequently, the lease receivable is reduced by the principal portion of lease payments received. The deferred inflows of resources are initially measured as the initial amount of the lease receivable, adjusted for lease payments received at or before the lease commencement date. Subsequently, the deferred inflows of resources are recognized as revenue over the life of the lease term in a systematic and rational method.

Key estimates and judgments include how MTS determines (1) the discount rate it uses to discount the expected lease receipts to present value, (2) lease term, and (3) lease receipts.

- MTS uses the incremental borrowing rate (IBR) provided by our financial institution at the time a new lease is executed. If the IBR exceeds the LAIF rate, an average of the IBR and LAIF rate will be used. Leases executed prior to July 1, 2021 used the IBR provided by our financial institutions as of that date.

- The lease term includes the noncancelable period of the lease plus any option periods that are likely to be exercised.

- Lease receipts included in the measurement of the lease receivable is composed of fixed payments from the lessee.

Note 1 – Summary of Significant Accounting Policies (Continued)

H. Leases (Continued)

Lessor (Continued)

MTS monitors changes in circumstances that would require a remeasurement of its lease and will remeasure the lease receivable and deferred inflows of resources if certain changes occur that are expected to significantly affect the amount of the lease receivable.

I. Subscription-Based Information Technology Arrangements (SBITAs)

MTS has a policy to recognize a SBITA liability and a right-to-use subscription asset (SBITA asset) in our financial statements with an initial, individual value of $50,000 or more with a subscription term greater than one year.

At the commencement of a subscription, when the subscription asset is placed into service, the SBITA liability is measured at the present value of payments expected to be made during the subscription term. Future subscription payments are discounted using MTS's incremental borrowing rate and MTS recognizes amortization of the discount on the subscription liability as interest expense in subsequent financial reporting periods.

SBITA assets are measured as the sum of the initial subscription liability, payments made to the SBITA vendor before the commencement of the lease term, and capitalizable implementation costs less any incentives received from the SBITA vendor at or before the commencement of the subscription term. Subscription assets are amortized using the straight-line method over the subscription term.

Key estimates and judgments related to SBITAs include how MTS determines (1) the discount rate it uses to discount the expected subscription payments to present value, (2) subscription term, and (3) subscription payments.

- MTS uses the interest rate charged by the SBITA vendor as the discount rate. When the interest rate charged by the SBITA vendor is not provided, MTS generally uses its estimated incremental borrowing rate as the discount rate for SBITAs.

- The subscription term includes the period during which MTS has a noncancelable right to use the underlying IT asset. The subscription term also includes periods covered by an option to extend if it is reasonably certain to be exercised.

- Subscription payments included in the measurement of the subscription liability are composed of fixed payments and purchase option years that MTS is reasonably certain to exercise. MTS monitors changes in circumstances that would require a remeasurement of a subscription and will remeasure any subscription asset and liability if certain changes occur that are expected to significantly affect the amount of the subscription liability.

Right-to-use subscription assets are reported along with other capital assets and subscription liabilities are reported on the statement of net position.

Note 1 – Summary of Significant Accounting Policies (Continued)

J. Capital Assets

Capital assets include land and right-of-way, buildings and infrastructure assets, vehicles, and equipment. Capital assets are defined by the government as assets with an initial, individual cost of more than $5,000. Such assets are recorded at historical cost or estimated historical cost if purchased or constructed. Donated capital assets, donated works of art and similar items, and capital assets received in a service concession arrangement are recorded at acquisition value. The costs of normal maintenance and repairs that do not add to the value of the asset or materially extend the asset's life are not capitalized. Major outlays for capital asset improvements are recorded as assets.

Buildings, vehicles, and equipment of the primary government, as well as the component units, are depreciated using the straight-line method over the following estimated useful lives:

Assets	Years
Building and structures	20 to 30
Vehicles and buses	5 to 25
Equipment and other capital assets	3 to 10
Right-to-use assets	3 to 40

K. Construction-in-Progress

Costs incurred for construction associated with the bus and trolley systems are capitalized as construction–in-progress until such time as they are complete and operational. Upon completion, they are contributed to SDTC, SDTI and MTS – Contracted Services to reflect their custodial accountability for the assets. Depreciation commences at the time of contribution.

L. Compensated Absences

MTS recognizes liabilities for compensated absences based on its leave policies and estimates of leave that are more likely than not to be used for time off or otherwise paid or settled. MTS determined that the following leave types are more likely than not to be fully used by employees or paid out upon retirement or termination:

- Vacation leave
- Annual leave
- Floating holiday leave
- Compensatory time off

MTS therefore reports liabilities for 100% of earned but unused leave held by employees at year end for these types of leave.

For sick leave, MTS performs calculations to estimate liabilities connected to two separate factors:

1) MTS employees are entitled to payouts of earned, but unused sick leave based on specific criteria under their respective collective bargaining agreements (CBA's). For those employees meeting the criteria at year end, MTS calculates the liability for the full amount they would be entitled to base on specific provisions covering maximum hours paid out under their respective CBAs.

Note 1 – Summary of Significant Accounting Policies (Continued)

L. Compensated Absences (Continued)

2) MTS performs a six year historical trend analysis of sick leave usage for employees in comparison with expected sick leave earnings for the current fiscal year by CBA. The resulting percentage is applied to the sick leave balances at year end for those employees not meeting the aforementioned vesting requirements to arrive at the expected portion of sick leave balances more likely than not to be used by these employees in the future.

For each type of leave, MTS estimates the amount expected to be used within one year based on the actual usage that took place in the current fiscal year.

For further information, refer to Note 8: Long-Term Liabilities.

M. Pension

For purposes of measuring the net pension liability and deferred outflows/inflows of resources related to pensions and pension expense, information about the fiduciary net position of MTS, SDTC and SDTI's pension plans and additions to/deductions from the Plans' fiduciary net position have been determined on the same basis as they are reported by CalPERS. For this purpose, benefit payments (including refunds of employee contributions) are recognized when due and payable in accordance with benefit terms. The valuation dates, measurement dates, and measurement periods vary by pension plan. See Note 12 for details.

N. Other Postemployment Benefits

For purposes of measuring the total OPEB liability, deferred outflows of resources and deferred inflows of resources related to OPEB, and OPEB expense, of the MTS, SDTC, and SDTI's OPEB Plan ("OPEB Plan") have been determined on the same basis as they are reported by the Plan (Note 11). For this purpose, the OPEB Plan recognizes benefit payments when due and payable in accordance with the benefits terms.

O. Net Position

Net Position is classified as follows:

Net Investment in Capital Assets – This component of net position consists of capital assets, lease and subscription assets, net of accumulated depreciation and amortization, reduced by the outstanding balances of debt and deferred inflows and outflows of resources that are attributable to the acquisition, construction, or improvement of those assets.

Restricted – This component of net position consists of restricted assets reduced by liabilities and deferred inflows of resources related to those assets.

Unrestricted – This component of net position is the amount of the assets, deferred outflows of resources, liabilities, and deferred inflows of resources that are not included in the determination of net investment in capital assets or the restricted component of net position.

Note 1 – Summary of Significant Accounting Policies (Continued)

P. Use of Estimates

The preparation of the basic financial statements in conformity with U.S. GAAP requires management to make estimates and assumptions that affect certain reported amounts of assets and liabilities and disclosure of contingent assets and liabilities at the date of the financial statements, and the reported amounts of revenues and expenses during the reported period. Actual results could differ from these estimates.

Q. Implementation of New GASB Pronouncements for the Year Ended June 30, 2026

During fiscal year ended June 30, 2026, MTS has implemented the following new GASB Pronouncements:

GASB Statement No. 103 – In April 2024, GASB issued Statement No. 103, *Financial Reporting Model Improvements*. The objective of this Statement is to improve key components of the financial reporting model to enhance its effectiveness in providing information that is essential for decision making and assessing a government's accountability. Application of this statement is effective for MTS's fiscal year ended June 30, 2026. Implementation resulted in updates to the management's discussion and analysis, changes to the presentation of the statement of revenues, expenses, and changes in net position, and certain fiscal year 2025 amounts have been reclassified to conform to the current year presentation. The reclassifications had no effect on previously reported net position. See Note 15 for additional information.

GASB Statement No. 104 – In September 2024, GASB issued Statement No. 104, *Disclosure of Certain Capital Assets*. The objective of this Statement is to provide users of government financial statements with essential information about certain types of capital assets. The objective will be met by requiring certain types of capital assets to be disclosed separately in the capital assets note disclosures as well as additional disclosures for capital assets held for sale. Application of this statement is effective for MTS's fiscal year ended June 30, 2026.

GASB Statement No. 105 – In December 2025, GASB issued Statement No. 105, *Subsequent Events*. The objective of this Statement is to improve the financial reporting requirements for subsequent events, thereby enhancing consistency in their application and better meeting the information needs of financial statement users. MTS early adopted this Statement for the fiscal year ended June 30, 2026. Implementation resulted in the disclosure presented in Note 17 and did not affect amounts reported in the financial statements.

Note 2 – Cash, Cash Equivalents, and Investments

A. Primary Government

Cash, cash equivalents, and investments are reported in the accompanying statements of net position as follows on June 30, 2026 and 2025:

	2026	2025
Cash, cash equivalents, and investments	$ 210,830,786	$ 250,604,231
Cash, cash equivalents, and investments restricted for capital support	195,626,804	221,058,392
Total cash, cash equivalents, and investments	$ 406,457,590	$ 471,662,623

Cash, cash equivalents, and investments consisted as follows on June 30, 2026 and 2025:

Investment Type	Measurement Input	Fair Value 2026	Fair Value 2025
Cash, cash equivalents, and investments:			
Demand deposits	N/A	$ 36,902,077	$ 36,639,946
Retention trust account	N/A	308,589	1,934,753
San Diego County Treasurer's Pooled Money Fund	Uncategorized	291,194,858	356,812,550
State of California - Local Agency Investment Fund	Uncategorized	78,052,066	76,275,374
Total cash, cash equivalents, and investments		$ 406,457,590	$ 471,662,623

Demand Deposits

As of June 30, 2026, the carrying amount of demand deposits was $36,902,077 and the bank balance was $40,937,168 compared to $36,639,946 and $44,439,802 at June 30, 2025, of which the total amount was collateralized or insured with securities held by the pledging financial institutions in MTS's name as discussed below.

All cash accounts are pooled and swept nightly to a concentration account. Funds required to be held by fiscal agents under the provisions of bond indentures are not included in the pooled cash account.

Investments

Under the provisions of MTS's investment policy and in accordance with California Government Code, MTS is authorized to invest or deposit in the following:

- United States Treasury bills, notes, bonds, or strips
- Federal Agency or U.S. government–sponsored enterprise obligations, participations, or other instruments, including those issued by or fully guaranteed as to principal and interest by Federal agencies or U.S. government–sponsored enterprises
- Eligible Banker's Acceptances
- Prime Commercial Paper issued by a U.S. organization with a rating category of "A" or "A–1", its equivalent or higher
- Non–negotiable certificates of deposit that meet the requirements for deposit under California Government Code Section 53630
- Negotiable Certificates of Deposit with issuers rated in a rating category of "A", its equivalent or higher

Note 2 – Cash, Cash Equivalents, and Investments (Continued)

A. Primary Government (Continued)

Investments (Continued)

- Repurchase Agreements collateralized by U.S. Treasury obligations, Federal Agency securities, or Federal Instrumentality securities
- Reverse Repurchase Agreements
- State of California's Local Agency Investment Fund (LAIF)
- The San Diego County Treasurer's Pooled Money Fund
- A Joint Powers Authority Pool rated among the top two rating categories by a nationally recognized statistical rating organization (NRSRO)
- Medium Term Notes issued by corporations organized and operating within the U.S. with issuers rated in a rating category of "A", its equivalent, or higher by a NRSRO.
- Money Market Funds registered under the Investment Company Act of 1940
- Municipal bonds as listed below with a rating "A", its equivalent, or higher and a final maturity not exceeding five years from the date of trade settlement:
  - Municipal bonds issued by MTS
  - Registered State warrants or treasury notes or bonds of the State of California
  - Bonds, notes, warrants, or other evidence of indebtedness of a local agency within California
  - Registered treasury notes or bonds of any of the other 49 states in addition to California
- Supranational obligations
- Mortgage pass–through securities, collateralized mortgage obligations, mortgage–backed or other pay–through bonds, equipment lease–backed certificates, consumer receivable pass–through certificates, or consumer receivable–backed bonds
- Commercial paper, debt securities, or other obligations of a public bank, as defined in Section 57600 of the California Government Code

For full details on the authorized investments and associated limitations, please refer to MTS Board Policy 30 on our website. **https://www.sdmts.com/about–mts–reports–records–and–policies/policies–and–procedures**

Local Agency Investment Funds

MTS is a participant in Local Agency Investment Fund (LAIF) which is regulated by California Government Code Section 16429 under the oversight of the Treasurer of the State of California. As of June 30, 2026, MTS had $78,052,066 invested in LAIF compared to $76,275,374 at June 30, 2025. LAIF determines fair value on its investments portfolio based on market quotations for those securities where market quotations are readily available and based on amortized cost or best estimate for those securities where market value is not readily available. LAIF is reported at amortized cost, which approximates fair value.

Note 2 – Cash, Cash Equivalents, and Investments (Continued)

A. Primary Government (Continued)

San Diego County Treasurer's Pooled Money Fund

The San Diego County Treasurer's Pooled Money Fund is a local government investment pool managed by the County Treasurer's Office on behalf of Investment Pool participants. Depositors in the Investment Pool include both mandatory participants, those agencies required by law to deposit their funds with the County Treasurer's Office, and voluntary participants, agencies that place their funds in the Investment Pool as an investment option. Voluntary participants, including cities, fire districts, and various special districts accounted for approximately 4.57% and 5.27% of the Investment Pool as of June 30, 2026 and 2025, respectively. At June 30, 2026 and 2025, the fair value of our position in the pool is 100.24% and 103.04%, respectively, of the value of the pool shares.

Pursuant to Sections 27130-27137 of the California Government Code, the County Board of Supervisors has established the Treasury Oversight Committee (TOC) that monitors and reviews the Investment Policy. The TOC consists of three Ex-officio positions of the County, a Board representative, and five members of the public, representing a City Official, a Special District Official, a School Official, and two members of the public having expertise in public finance per Government Code. The Investment Policy requires a financial audit to be conducted annually on a fiscal year basis, which includes limited tests of compliance with laws and regulations, with the duty of the TOC to review the audit. The Pool is not registered with the Securities and Exchange Commission (SEC) as an investment company. The Pool does not have any legally binding guarantees of share values.

To mitigate credit risk, the Investment Pool's Investment Policy, which is more restrictive than the Government Code, places a minimum standard on the ratings of investments held in the Investment Pool. Investments in securities other than those guaranteed by the U.S. Treasury or Government Sponsored Enterprises must have a credit rating of no less than "A" for long-term or "F1" for short-term. Non-rated securities include sweep accounts and repurchase agreements. Sweep accounts and collateralized certificates of deposit must be FDIC insured and collateralized with securities held by a named agent of the depository. Repurchase agreements are collateralized by securities, authorized by the California Government Code Section 53601, having fair value of at least 102% of the amount of the repurchase agreement. The Pool did not have any repurchase agreements in its portfolio as of June 30, 2026 and 2025.

MTS's investments with the County Treasurer's Office include a portion of the pool funds invested in asset–backed securities, which entitle their purchaser to receive a share of the cash flows from a pool of assets such as principal and interest repayments from a pool of mortgages (such as collateralized mortgage obligations), small business loans or credit card receivables. As of June 30, 2026, MTS had $291,194,858 invested with the San Diego County Treasurer's Pooled Money Fund, which had invested 2.24% of the pool investment funds in asset–backed securities compared to $356,812,550 and 4.60% at June 30, 2025.

Disclosures Relating to Interest Rate Risk

As a means of limiting its exposure to market value losses arising from rising interest rates, MTS's investment policy limits investments to maturities dependent on the investment vehicle.

Note 2 – Cash, Cash Equivalents, and Investments (Continued)

A. Primary Government (Continued)

Disclosures Relating to Credit Risk

MTS's investment policy limits investments in commercial paper to instruments rated "A", its equivalent, or better by a NRSRO, and negotiable certificates of deposit to instruments rated "A", its equivalent, or better by two NRSROs. In the current year, MTS does not hold investments in commercial paper or certificates of deposit. MTS investment instruments include deposits in LAIF and the San Diego County Treasurer's Pooled Money Fund which are not rated and do not require ratings.

Disclosures Relating to Concentration of Credit Risk

The investment policy limits the amount of the percentage of the portfolio that can be invested by the type of investment for certain types of investments. MTS is in compliance with investment type percentages of the total portfolio of the investment policy.

Disclosures Relating to Custodial Credit Risk

Custodial credit risk for deposits is the risk that, in the event of the failure of a depository financial institution, a government will not be able to recover collateral securities that are in the possession of an outside party. The custodial credit risk for investments is the risk that, in the event of the failure of the broker or dealer to a transaction, a government will not be able to recover the value of its investments or collateral securities that are in the possession of another party. The California Government Code requires California banks and savings and loan associations to secure MTS's cash deposits by pledging securities as collateral. This Code states that collateral pledged in this manner shall have the effect of perfecting a security interest in such collateral superior to those of a general creditor. Thus, collateral for cash deposits is considered to be held in MTS's name.

The fair value of pledged securities must equal at least 110% of MTS's cash deposits. California law also allows institutions to secure MTS deposits by pledging first trust deed mortgage notes having a value of 150% of MTS's total cash deposits and letters of credit issued by the Federal Home Loan Bank of San Francisco having a value of 105% of MTS's cash deposits. MTS may waive collateral requirements for cash deposits which are fully insured up to $250,000 by the Federal Deposit Insurance Corporation. MTS has not waived the collateralization requirements.

Summary of Cash, Cash Equivalents, and Investments to Maturity

Cash, cash equivalents, and investments held by MTS grouped by maturity date at June 30, 2026 and 2025, are shown below:

Maturity	2026	2025
Current to one year	$ 406,457,590	$ 471,662,623
Total	$ 406,457,590	$ 471,662,623

Note 2 – Cash, Cash Equivalents, and Investments (Continued)

B. Fiduciary Fund

Investments

The fair value and net asset value of the investments at June 30, 2026 and 2025 were as follows:

	Fair Value June 30, 2026	Quoted Prices in Active Markets for Identical Assets (Level 1)
Investments by Fair Value Level:		
Common Stocks:		
PIMCO Research Affiliates Equity (RAE) Fund	$ 21,444,571	$ 21,444,571
Total Common Stocks	21,444,571	21,444,571
Mutual Funds:		
Blackrock Minimum Volatility ETF	21,896,131	21,896,131
Fidelity U.S. Sustainability Index Fund	6,360,041	6,360,041
Dodge & Cox US Stock Fund	22,782,651	22,782,651
Vanguard Treasury Fund	6,206,028	6,206,028
Total Mutual Funds	57,244,851	57,244,851
Corporate Bond Funds:		
PGIM AAA Collateralized Loan Obligation ETF	40,634,295	40,634,295
Vanguard Long Bond Fund	39,606,715	39,606,715
Vanguard Total Bond Fund	40,168,204	40,168,204
Total Corporate Bond Funds	120,409,214	120,409,214
Short-Term Investment Funds:		
First American Prime Obligations Fund	751,581	751,581
Total Short-Term Investment Funds	751,581	751,581
Total Investments by Fair Value Level	199,850,217	$ 199,850,217
Investments Measured at Net Asset Value:		
Common Stocks:		
MFS Investment Management	21,752,403	
Total Common Stocks	21,752,403	
Total Investments Measured at Net Asset Value	21,752,403	
Total Investments	$ 221,602,620	

Note 2 – Cash, Cash Equivalents, and Investments (Continued)

B. Fiduciary Fund (Continued)

Investments (Continued)

	Fair Value June 30, 2025	Quoted Prices in Active Markets for Identical Assets (Level 1)
Investments by Fair Value Level:		
Common Stocks:		
PIMCO Research Affiliates Equity (RAE) Fund	$ 22,383,649	$ 22,383,649
Total Common Stocks	22,383,649	22,383,649
Mutual Funds:		
Blackrock Minimum Volatility ETF	21,130,137	21,130,137
Fidelity U.S. Sustainability Index Fund	5,134,098	5,134,098
Vanguard Treasury Fund	15,772,112	15,772,112
Total Mutual Funds	42,036,347	42,036,347
Corporate Bond Funds:		
Vanguard Long Bond Fund	43,088,993	43,088,993
Vanguard Total Bond Fund	21,890,279	21,890,279
Total Corporate Bond Funds	64,979,272	64,979,272
Short-Term Investment Funds:		
First American Prime Obligations Fund	30,205,749	30,205,749
Total Short-Term Investment Funds	30,205,749	30,205,749
Total Investments by Fair Value Level	159,605,017	$ 159,605,017
Investments Measured at Net Asset Value:		
Common Stocks:		
BNYM Newton Small-Mid Cap Growth	5,663,091	
MFS Investment Management	22,240,799	
Total Common Stocks	27,903,890	
Mutual Funds:		
Westwood Trust Large Cap Equity EB Fund	20,791,003	
Total Mutual Funds	20,791,003	
Total Investments Measured at Net Asset Value	48,694,893	
Total Investments	$ 208,299,910	

Note 2 – Cash, Cash Equivalents, and Investments (Continued)

B. Fiduciary Fund (Continued)

Investments (Continued)

Fair Value Measurement – Investment Valuation

Investments are reported at fair value. Quoted market value (Level 1) and fair value per share (Level 2) in an active market are used to value investments, except for shares in the short–term investment funds, which trade and are reported at par value as reported by the investment custodian. Investment securities classified in Level 2 of the fair value hierarchy are valued using prices determined by the use of matrix pricing techniques maintained by the pricing vendors for these securities. Matrix pricing is used to value securities based on the securities' relationship to benchmark quoted prices. The calculation of realized gains and losses is independent of the calculation of the change in the fair value of investments and realized gains and losses of the current period include unrealized amounts from prior periods.

Investments in closely held instruments (hedge funds) are reported under Level 3 under fair value measurement input hierarchy. The underlying hedge fund values are estimated by the hedge fund managers in the absence of readily ascertainable market values. In accordance with the investment manager's Valuation Policy and *Fair Value Measurements and Disclosure*, the investment manager has the right, in its discretion and in good faith, to deviate from valuation information provided by the managers of the investment vehicles when the investment manager deems it appropriate. Because of the inherent uncertainty of valuations in the investment vehicles, values may differ significantly from the values that would have been used had a ready market for these investments existed, and the differences could be material.

The following tables summarize investments, excluding cash and cash equivalents, measured at fair value based on NAV per share as of June 30, 2026 and 2025, respectively:

June 30, 2026	Fair Value	Unfunded Commitments	Redemption Frequency (if currently available)	Redemption Notice Period
MFS Investment Management	$ 21,752,403	N/A	Daily	Daily

June 30, 2025	Fair Value	Unfunded Commitments	Redemption Frequency (if currently available)	Redemption Notice Period
BNYM Newton Small-Mid Cap Growth	$ 5,663,091	N/A	Daily	Daily
MFS Investment Management	22,240,799	N/A	Daily	Daily
Westwood Trust Large Cap Equity EB Fund	20,791,003	N/A	Daily	Daily
Total	$ 48,694,893			

Note 2 – Cash, Cash Equivalents, and Investments (Continued)

B. Fiduciary Fund (Continued)

Investments (Continued)

Fair Value Measurement – Investment Valuation (Continued)

During the Plan years, investments, including realized gains and losses on investments and unrealized appreciation (depreciation) on investments held, appreciated (depreciated) in value as follows:

	2026	2025
Realized gain (loss) on investments	$ 12,738,424	$ 14,507,172
Unrealized appreciation (depreciation) on investments held	(2,880,782)	(1,470,618)
Net realized and unrealized investment gains (losses)	$ 9,857,642	$ 13,036,554

The Plan's investment policy was approved by the SDTC Pension Trustee Investment Committee. The Plan's investment policy allows investments in the following asset classes and sets forth the target allocations and allocation ranges.

Asset Class	Target Allocation	Allocation Range
Equity		
United States	25.0%	
International	20.0%	
Subtotal	45.0%	30% - 60%
Fixed Income	55.0%	40% - 70%
Total	100.0%	

Concentrations of Investments

The Plan has invested in certain organizations in excess of 5% of the Fiduciary Net Position. The concentrated investments are as follows:

	2026		2025	
	Fair Value	%	Fair Value	%
Common Stocks:				
MFS Investment Management	$ 21,752,403	9.8%	$ 22,240,799	10.7%
PIMCO Research Affiliates Equity (RAE) Fund	21,444,571	9.7%	22,383,649	10.7%
Mutual Funds:				
Dodge & Cox US Stock Fund	22,782,651	10.3%	-	-
Blackrock Minimum Volatility ETF	21,896,131	9.9%	21,130,137	10.1%
Westwood Trust Large Cap Equity EB Fund	-	-	20,791,003	10.0%
Vanguard Treasury Fund	-	-	15,772,112	7.6%
Corporate Bond Funds:				
PGIM AAA Collateralized Loan Obligation ETF	40,634,295	18.3%	-	-
Vanguard Total Bond Fund	40,168,204	18.1%	21,890,279	10.5%
Vanguard Long Bond Fund	39,606,715	17.9%	43,088,993	20.7%
Short-Term Investment Funds:				
First American Prime Obligations Fund	-	-	30,205,749	14.5%

Note 2 – Cash, Cash Equivalents, and Investments (Continued)

B. Fiduciary Fund (Continued)

Investments (Continued)

Rate of return

For the years ended June 30, 2026 and 2025, the annual money-weighted rate of return on pension plan investments, net of pension plan investment expense, was 4.70% and 6.68% respectively. The money-weighted rate of return express investment performance, net of investment expense, adjusted for the changing amount actually invested.

Concentration of Credit Risk

The Plan's investment policy limits the amount of the percentage of the portfolio that can be invested by type of investment. The Plan mitigates credit risk in its portfolio by allocating funds among various investment managers and limiting the concentration of investments within these managers. Fixed-income securities should generally have a quality rating of investment grade at the time of purchase. However, investment managers may purchase securities rated below investment grade (with a minimum rating of B- or equivalent at the time of purchase) in an amount not to exceed 10% of the marked value of the fixed-income portfolio at the time of purchase. The individual investments in excess of 5% identified in the fair value of the investments table are, in turn, funds with diversified portfolios.

	June 30, 2026						
	Not Rated	AAA	AA	A	BBB	Below	Total
Corporate Bond Funds:							
Vanguard Total Bond Fund (VBTIX)	$ -	$ 1,225,130	$ 29,166,133	$ 4,800,100	$ 4,972,824	$ 4,017	$ 40,168,204
Vanguard Long Bond Fund (VBLLX)	-	388,146	23,637,287	7,747,073	7,814,405	19,804	39,606,715
PGIM AAA Collateralized Loan Obligation ET	-	40,187,318	446,977	-	-	-	40,634,295
All Other Investments	101,193,406	-	-	-	-	-	101,193,406
Total	$ 101,193,406	$ 41,800,594	$ 53,250,397	$ 12,547,173	$ 12,787,229	$ 23,821	$ 221,602,620

	June 30, 2025						
	Not Rated	AAA	AA	A	BBB	Below	Total
Corporate Bond Funds:							
Vanguard Total Bond Fund (VBTIX)	$ -	$ 707,056	$ 15,758,812	$ 2,615,888	$ 2,808,523	$ -	$ 21,890,279
Vanguard Long Bond Fund (VBLLX)	-	529,995	24,565,035	8,803,081	9,156,411	34,471	43,088,993
All Other Investments	143,320,638	-	-	-	-	-	143,320,638
Total	$ 143,320,638	$ 1,237,051	$ 40,323,847	$ 11,418,969	$ 11,964,934	$ 34,471	$ 208,299,910

Interest Rate Risk

Interest rate risk is the risk that inversely affects the value of fixed income bond portfolio holdings. The Plan's investment policy endorses a long–term approach to manage the portfolio but not to expose the portfolio to levels of volatility that might significantly affect the principal value of the Plan.

The purpose of equity (both U.S. and International) investments is primarily to provide capital appreciation. It is recognized that this requires the assumption of greater market variability and risk than is the case with fixed income investment. The purpose of international, non-U.S. dollar-denominated investments is primarily to provide capital appreciation through participation in major non-U.S. financial markets and, secondarily, to enhance portfolio diversification. It is recognized that this required the assumption of greater market variability and risk than was the case with U.S. investments, and the assumption of foreign currency risk. The purpose of fixed income investments is to provide stability and generate income. The purpose of cash equivalents is to provide liquidity, stability and a vehicle for defensive positioning of the portfolio.

Note 2 – Cash, Cash Equivalents, and Investments (Continued)

B. Fiduciary Fund (Continued)

Investments (Continued)

Interest Rate Risk (Continued)

The use of short to intermediate maturity bonds (ten years, or less, to maturity) as temporary instruments is permitted by the Plan's investment policy but not to be employed to the extent that such holding might limit the ability to achieve the basic long-term-capital appreciation objective for the portfolio.

Custodial Risk

For an investment, custodial credit risk is the risk that, in the event of the failure of the counterparty, the Plan will not be able to recover the value of its investments. All securities are held by a third–party custodian, U.S. Bank, National Association (U.S. Bank). U.S. Bank is a registered member of the Federal Reserve Bank. The securities held by U.S. Bank are in their street name, and an account number assigned to the Plan identifies ownership.

Note 3 – Receivables

Management evaluates the collectibility of accounts and other receivables and amounts due from other governments on an ongoing basis and considers all amounts to be fully collectible. Accordingly, no allowance for uncollectible accounts was recorded as of June 30, 2026 and 2025.

A. Accounts and Other Receivables

At June 30, 2026 and 2025, the net accounts and other receivables consisted of the following:

	2026	2025
Energy credits and rebate revenue	$ 8,153,226	$ 5,971,002
Interest receivable	5,732,346	5,579,313
Other trade receivables	2,167,979	2,409,912
Passenger revenue - general public	691,468	2,849,245
Pension plan receivable	416,098	450,085
Insurance Recovery	127,931	3,775,591
Total accounts and other receivables	$ 17,289,048	$ 21,035,148

Note 3 – Receivables (Continued)

B. Due from Other Governments

At June 30, 2026 and 2025, amounts due from other governments consisted of the following:

	2026	2025
FTA Grant Funds	$ 84,414,330	$ 83,303,270
SANDAG - TransNet	16,057,559	35,294,187
STA Funds	9,444,753	9,442,409
State of California	8,065,471	2,773,009
US Treasury	2,113,040	2,637,255
SANDAG - Project/Route reimbursement	1,123,174	569,194
North County Transit District - passenger revenue and shared costs	571,197	759,725
City of San Diego	294,610	-
Passenger Revenue - Other Governments	142,679	2,689,114
Department of Homeland Security	139,789	-
County of San Diego	-	7,754
Total due from other governments	$ 122,366,602	$ 137,475,917

C. Lease Receivable and Related Deferred Inflows of Resources

MTS leases various types of property including land, buildings and easements. Lease receivable consists of agreements with others for the right–to–use of the underlying assets at various locations owned by MTS. The remaining terms of the agreements range from 5 to 47 years. The calculated interest rates used vary depending on the length of the lease.

For the fiscal year ended June 30, 2026, MTS recognized $3,248,287 in lease revenue and $1,007,724 in interest revenue, and the outstanding receivable amount is $69,697,873. For the fiscal year ended June 30, 2025, MTS recognized $3,007,903 in lease revenue and $948,656 in interest revenue and the receivable amount was $65,560,108.

A summary of changes in lease receivable for the fiscal year ended June 30, 2026 is as follows:

Balance July 1, 2025	Additions	Reductions	Balance June 30, 2026	Amounts due within one year	Amounts due in more than one year
$ 65,560,108	$ 7,112,354	$ (2,974,589)	$ 69,697,873	$ 2,401,474	$ 67,296,399

A summary of changes in lease receivable for the fiscal year ended June 30, 2025 is as follows:

Balance July 1, 2024	Additions	Reductions	Balance June 30, 2025	Amounts due within one year	Amounts due in more than one year
$ 62,709,507	$ 5,120,256	$ (2,269,655)	$ 65,560,108	$ 2,516,670	$ 63,043,438

Note 3 – Receivables (Continued)

C. Lease Receivable and Related Deferred Inflows of Resources (Continued)

As of June 30, 2026, the required payments for these leases, including interest, are:

Year Ending June 30	Lease Receivable	Interest	Total
2027	$ 2,401,474	$ 1,208,479	$ 3,609,953
2028	2,467,500	1,174,941	3,642,441
2029	2,535,728	1,139,998	3,675,726
2030	2,636,407	1,103,453	3,739,860
2031	2,709,607	1,065,191	3,774,798
2032-2036	14,802,961	4,693,497	19,496,458
2037-2041	16,780,351	3,467,197	20,247,548
2042-2046	9,008,354	2,219,434	11,227,788
2047-2051	3,623,101	1,811,898	5,434,999
2052-2056	4,597,434	1,430,094	6,027,528
2057-2061	4,709,272	900,534	5,609,806
2062-2066	3,425,684	282,741	3,708,425
Total	$ 69,697,873	$ 20,497,457	$ 90,195,330

As of June 30, 2026, the amounts reported as deferred inflows of resources will be recognized as lease revenue as follows:

Year Ending June 30	Total
2027	$ 3,297,543
2028	3,297,543
2029	3,297,543
2030	3,297,543
2031	3,297,543
2032-2036	16,487,713
2037-2041	16,108,256
2042-2046	7,928,579
2047-2051	3,277,697
2052-2056	3,277,697
2057-2061	2,880,412
2062-2066	1,924,964
2067-2071	90,790
2072-2074	45,392
Total	$ 68,509,215

In addition to the leases reported above, MTS has one additional ground lease Union Grantville, LLC. The amount due each month, in arrears, is based on seven percent (7%) of the lessees' gross collections from the residential apartments. Since these amounts are variable, they are not included in the lease receivable and deferred inflow schedules. For fiscal year 2026, total lease revenue was $672,627 compared to $580,320 in fiscal year 2025.

Note 4 – Inventory

At June 30, 2026 and 2025, inventory consisted of the following repair and maintenance parts and administrative supplies:

	2026	2025
San Diego Transit Corporation	$ 5,728,276	$ 4,859,952
San Diego Trolley, Inc.	39,962,830	38,325,467
Total inventory	$ 45,691,106	$ 43,185,419

Inventory at June 30, 2026 includes spare parts with a carrying value of approximately $3.3 million that are no longer needed for MTS operations. MTS is negotiating the sale of these parts to a foreign municipality, and at the counterparty's request, negotiations have been extended into early 2027. MTS has also received interest from another potential buyer. Based on these recovery options, management determined that the carrying value of the parts does not exceed their net realizable value at June 30, 2026, and no write-down was recorded.

Note 5 – Capital Assets

A summary of changes in capital assets for the year ended June 30, 2026 is as follows:

	Balance July 1, 2025	Additions	Deletions	Adjustments & Remeasurements	Balance June 30, 2026
Capital assets, not depreciated:					
Land and right-of-way	$ 270,102,306	$ 21,648,303	$ -	$ -	$ 291,750,609
Construction-in-progress	45,985,972	119,124,722	(103,662,173)	-	61,448,521
Total capital assets, not depreciated	316,088,278	140,773,025	(103,662,173)	-	353,199,130
Capital assets being depreciated:					
Buildings and structures	3,707,238,087	38,211,339	(62,974,208)	-	3,682,475,218
Buses and vehicles	1,109,482,752	47,382,409	(32,707,458)	-	1,124,157,703
Equipment and other	175,815,712	9,349,040	(8,417,598)	-	176,747,154
Lease assets:					
Land and land improvements	9,656,946	-	-	-	9,656,946
Buildings and structures	14,132,344	494,495	-	-	14,626,839
Subscription assets	6,098,702	4,446,694	(1,500,964)	-	9,044,432
Total capital assets being depreciated	5,022,424,543	99,883,977	(105,600,228)	-	5,016,708,292
Less accumulated depreciation for:					
Buildings and structures	(1,608,218,301)	(123,004,640)	62,297,762	-	(1,668,925,179)
Buses and vehicles	(454,624,985)	(59,215,466)	32,707,458	-	(481,132,993)
Equipment and other	(96,867,588)	(15,423,834)	8,298,411	-	(103,993,011)
Lease assets:					
Land and land improvements	(1,192,215)	(238,443)	-	-	(1,430,658)
Buildings and structures	(12,694,248)	(158,651)	-	-	(12,852,899)
Subscription assets	(2,785,745)	(1,984,177)	1,500,964	-	(3,268,958)
Total accumulated depreciation	(2,176,383,082)	(200,025,211)	104,804,595	-	(2,271,603,698)
Total capital assets, net	$ 3,162,129,739	$ 40,631,791	$ (104,457,806)	$ -	$ 3,098,303,724

Note 5 – Capital Assets (Continued)

A summary of changes in capital assets for the year ended June 30, 2025 is as follows:

	Balance July 1, 2024	Additions	Deletions	Adjustments & Remeasurements	Balance June 30, 2025
Capital assets, not depreciated:					
Land and right-of-way	$ 270,088,885	$ 13,421	$ -	$ -	$ 270,102,306
Construction-in-progress	94,999,630	87,874,011	(136,887,669)	-	45,985,972
Total capital assets, not depreciated	365,088,515	87,887,432	(136,887,669)	-	316,088,278
Capital assets being depreciated:					
Buildings and structures	3,704,643,833	31,459,501	(28,865,247)	-	3,707,238,087
Buses and vehicles	1,072,082,028	98,330,176	(60,929,452)	-	1,109,482,752
Equipment and other	170,076,150	7,122,332	(1,382,770)	-	175,815,712
Lease assets:					
Land and land improvements	9,656,946	-	-	-	9,656,946
Buildings and structures	14,256,740	-	(151,954)	27,558	14,132,344
Subscription assets	5,858,233	1,001,431	(760,962)	-	6,098,702
Total capital assets being depreciated	4,976,573,930	137,913,440	(92,090,385)	27,558	5,022,424,543
Less accumulated depreciation for:					
Buildings and structures	(1,503,933,242)	(131,758,133)	27,473,074	-	(1,608,218,301)
Buses and vehicles	(457,997,364)	(56,524,850)	59,897,229	-	(454,624,985)
Equipment and other	(82,072,393)	(16,150,106)	1,354,911	-	(96,867,588)
Lease assets:					
Land and land improvements	(953,772)	(238,443)	-	-	(1,192,215)
Buildings and structures	(12,712,565)	(133,637)	151,954	-	(12,694,248)
Subscription assets	(2,165,222)	(1,381,485)	760,962	-	(2,785,745)
Total accumulated depreciation	(2,059,834,558)	(206,186,654)	89,638,130	-	(2,176,383,082)
Total capital assets, net	$ 3,281,827,887	$ 19,614,218	$ (139,339,924)	$ 27,558	$ 3,162,129,739

Construction in Progress

MTS converted $103.7 million from construction in process (CIP) to assets in service in FY2026 compared to $136.9 million in FY2025. A summary of capital asset additions transferred from CIP to depreciable assets by MTS is as follows:

	2026	2025
MTS - General Operations	$ 339,001	$ 623,460
MTS - Contracted Services	21,369,587	6,116,595
San Diego Transit Corporation	45,769,505	8,236,626
San Diego Trolley, Inc.	36,184,080	121,910,988
Total	$ 103,662,173	$ 136,887,669

Capital Contributions

Capital asset additions totaling $12.9 million were contributed by SANDAG in FY2026 compared to $38 thousand in FY2025. SANDAG also contributed spare parts for the new LRVs to SDTI in FY2025. A summary of capital contributions is as follows:

	2026	2025
San Diego Trolley, Inc.	$ 12,928,918	$ 37,760
San Diego Trolley, Inc - LRV Spare Parts Inventory	-	439,025
Total capital contributions	$ 12,928,918	$ 476,785

Note 5 – Capital Assets (Continued)

Depreciation and Amortization

Depreciation and amortization expense for capital assets for the years ended June 30, 2026 and 2025 were comprised of the following:

	2026	2025
MTS - General Operations	$ 4,193,133	$ 4,599,909
MTS - Contracted Services	28,721,037	27,747,281
San Diego Transit Corporation	24,050,116	24,084,950
San Diego Trolley, Inc.	143,060,925	149,754,514
Total	$ 200,025,211	$ 206,186,654

Held for Sale

As of June 30, 2026 and 2025, MTS did not have any capital assets held for sale.

Note 6 – Due to Other Governments

At June 30, 2026 and 2025, amounts due to other governments consisted of the following:

	2026	2025
State of California - miscellaneous	$ 779,615	$ 356,358
North County Transit District - passenger revenue	566,378	475,777
SANDAG - project reimbursements	377,351	32,944
City of San Diego - miscellaneous	321,884	377,016
City of Lemon Grove - TDA funds	184,267	188,611
City of El Cajon - TDA funds	138,209	141,468
City of Coronado - TDA funds	92,172	74,181
City of La Mesa - TDA funds	78,314	80,160
County of San Diego - miscellaneous	68,363	67,877
City of Poway - TDA funds	49,659	49,275
City of Chula Vista - miscellaneous	48,970	40,198
Other Governments - miscellaneous	37,037	20,523
Total due to other governments	$ 2,742,219	$ 1,904,388

Note 7 – Unearned Revenue

At June 30, 2026 and 2025, unearned revenue consisted of the following:

	2026	2025
SB 125 Formula funds received in advance	$ 159,728,168	$ 180,830,903
Caltrans LCTOP funds received in advance	28,781,555	30,995,878
Fare media payments received in advance	14,915,986	14,444,218
STA State of Good Repair funds received in advance	11,718,012	8,945,455
Other reimbursements received in advance	1,594,414	496,652
Naming rights payment received in advance	1,268,212	1,206,484
Total unearned revenue	$ 218,006,347	$ 236,919,590

Note 8 – Long-Term Liabilities

A. Summary

A summary of changes in long–term obligations for the year ended June 30, 2026 is as follows:

	Balance June 30, 2025	Additions	Reductions	Balance June 30, 2026	Amounts due within one year	Amounts due in more than one year
MTS:						
Compensated absences*	$ 1,958,137	$ 128,328	$ -	$ 2,086,465	$ 1,813,442	$ 273,023
Accrued damage, injury, and employee claims	2,440,625	578,000	(1,134,389)	1,884,236	899,593	984,643
Subscription liability	3,030,518	4,389,277	(3,469,397)	3,950,398	1,139,262	2,811,136
Aggregate net pension liability	18,961,578	897,537	(3,897,093)	15,962,022	-	15,962,022
Aggregate total OPEB liability	6,982,468	770,243	(1,179,533)	6,573,178	145,095	6,428,083
Total MTS	33,373,326	6,763,385	(9,680,412)	30,456,299	3,997,392	26,458,907
MTS Contracted Services:						
Lease liability	8,690,093	-	(175,207)	8,514,886	178,636	8,336,250
Subscription liability	-	57,417	(57,417)	-	-	-
Total MTS Contracted Services	8,690,093	57,417	(232,624)	8,514,886	178,636	8,336,250
San Diego Transit Corporation:						
Compensated absences*	7,395,649	62,759	-	7,458,408	5,318,762	2,139,646
Accrued damage, injury, and employee claims	18,338,828	7,552,581	(3,458,801)	22,432,608	8,301,143	14,131,465
Lease liability	317,900	-	(67,730)	250,170	71,584	178,586
Aggregate net pension liability	154,676,640	28,529,981	(39,075,196)	144,131,425	-	144,131,425
Aggregate total OPEB liability	21,294,511	1,827,844	(9,795,951)	13,326,404	442,853	12,883,551
Total San Diego Transit Corporation	202,023,528	37,973,165	(52,397,678)	187,599,015	14,134,342	173,464,673
San Diego Trolley, Inc.:						
Compensated absences*	3,838,414	127,596	-	3,966,010	3,966,010	-
Accrued damage, injury, and employee claims	8,463,959	7,168,242	(6,953,372)	8,678,829	3,286,471	5,392,358
Lease liability	1,331,547	494,495	(40,366)	1,785,676	37,751	1,747,925
Aggregate net pension liability	45,102,357	25,415,576	(35,551,964)	34,965,969	-	34,965,969
Aggregate total OPEB liability	12,970,501	1,472,849	(1,950,309)	12,493,041	299,075	12,193,966
Total San Diego Trolley, Inc.	71,706,778	34,678,758	(44,496,011)	61,889,525	7,589,307	54,300,218
Total	$ 315,793,725	$ 79,472,725	$ (106,806,725)	$ 288,459,725	$ 25,899,677	$ 262,560,048

* The change in the compensated absences liability is presented as a net change.

Note 8 – Long–Term Liabilities (Continued)

A. Summary (Continued)

A summary of changes in long–term obligations for the year ended June 30, 2025 is as follows:

	Balance July 1, 2024	Additions	Reductions	Balance June 30, 2025	Amounts due within one year	Amounts due in more than one year
MTS:						
Compensated absences*	$ 1,727,513	$ 230,624	$ -	$ 1,958,137	$ 1,683,025	$ 275,112
Accrued damage, injury, and employee claims	2,353,308	977,728	(890,411)	2,440,625	857,598	1,583,027
Subscription liability	2,948,291	1,001,431	(919,204)	3,030,518	1,049,849	1,980,669
Aggregate net pension liability	19,332,817	3,099,593	(3,470,832)	18,961,578	-	18,961,578
Aggregate total OPEB liability	6,459,098	726,612	(203,242)	6,982,468	120,750	6,861,718
Total MTS	32,821,027	6,035,988	(5,483,689)	33,373,326	3,711,222	29,662,104
MTS Contracted Services:						
Lease liability	8,861,936	-	(171,843)	8,690,093	175,207	8,514,886
Total MTS Contracted Services	8,861,936	-	(171,843)	8,690,093	175,207	8,514,886
San Diego Transit Corporation:						
Compensated absences*	6,897,639	498,010	-	7,395,649	4,922,810	2,472,839
Accrued damage, injury, and employee claims	16,856,061	8,046,347	(6,563,580)	18,338,828	5,731,364	12,607,464
Lease liability	386,969	27,559	(96,628)	317,900	67,730	250,170
Aggregate net pension liability	159,680,176	28,070,835	(33,074,371)	154,676,640	-	154,676,640
Aggregate total OPEB liability	20,948,280	1,760,087	(1,413,856)	21,294,511	1,233,750	20,060,761
Total San Diego Transit Corporation	204,769,125	38,402,838	(41,148,435)	202,023,528	11,955,654	190,067,874
San Diego Trolley, Inc.:						
Compensated absences*	4,077,945	-	(239,531)	3,838,414	3,838,414	-
Accrued damage, injury, and employee claims	8,910,452	4,435,977	(4,882,470)	8,463,959	2,737,804	5,726,155
Lease liability	1,354,606	-	(23,059)	1,331,547	25,988	1,305,559
Aggregate net pension liability	50,231,386	22,389,132	(27,518,161)	45,102,357	-	45,102,357
Aggregate total OPEB liability	12,244,775	1,138,845	(413,119)	12,970,501	323,400	12,647,101
Total San Diego Trolley, Inc.	76,819,164	27,963,954	(33,076,340)	71,706,778	6,925,606	64,781,172
Total	$ 323,271,252	$ 72,402,780	$ (79,880,307)	$ 315,793,725	$ 22,767,689	$ 293,026,036

* The change in the compensated absences liability is presented as a net change.

Long–term liabilities is reported in the accompanying statements of net position as follows:

	2026			2025		
	Due within one year	Due in more than one year	Total	Due within one year	Due in more than one year	Total
Long-Term Liabilities:						
Compensated absences	$ 11,098,214	$ 2,412,669	$ 13,510,883	$ 10,444,249	$ 2,747,951	$ 13,192,200
Accrued damage, injury, and employee claims	12,487,207	20,508,466	32,995,673	9,326,766	19,916,646	29,243,412
Lease liability	287,971	10,262,761	10,550,732	268,925	10,070,615	10,339,540
Subscription liability	1,139,262	2,811,136	3,950,398	1,049,849	1,980,669	3,030,518
Aggregate net pension liability	-	195,059,416	195,059,416	-	218,740,575	218,740,575
Aggregate total OPEB liability	887,023	31,505,600	32,392,623	1,677,900	39,569,580	41,247,480
Total long-term liabilities	$ 25,899,677	$ 262,560,048	$ 288,459,725	$ 22,767,689	$ 293,026,036	$ 315,793,725

Note 8 – Long–Term Liabilities (Continued)

B. Lease Liability

MTS has entered into leases for land and building use. The remaining terms on the leases range from 4 to 34 years. The calculated interest rates used range between 1.33% and 1.96% depending on the length of the lease.

At June 30, 2026 and 2025, the outstanding balance of the leases are $10,550,732 and $10,339,540, respectively.

Principal and interest payments to maturity as of June 30, 2026 are as follows:

Year ending June 30	Principal	Interest	Total
2027	$ 287,971	$ 201,248	$ 489,219
2028	299,518	196,007	495,525
2029	311,553	190,563	502,116
2030	262,974	185,218	448,192
2031	248,298	180,401	428,699
2032-2036	1,380,822	825,000	2,205,822
2037-2041	1,650,448	678,633	2,329,081
2042-2046	1,785,761	505,784	2,291,545
2047-2051	1,499,205	349,860	1,849,065
2052-2056	1,508,003	204,617	1,712,620
2057-2060	1,316,179	53,918	1,370,097
Total	$ 10,550,732	$ 3,571,249	$ 14,121,981

In addition to the lease obligations reported above, MTS has one additional sublease with the County of San Diego. The amount due each year is based on actual operating and capital costs. Since these amounts can vary significantly year over year, they are not included in the lease liability calculations. For fiscal years 2026 and 2025, total lease payments for the sublease were $2,088,212 and $1,963,640, respectively.

C. Subscription Liability

MTS has entered into subscription-based information technology arrangements (SBITAs) for services related to cloud-based software applications, data storage and management services. Under the terms of these arrangements, MTS does not take possession of the software at any time and the vendor provides ongoing services for the software's operation. The subscription periods vary, with initial non-cancellable terms ranging from 14 months to 10 years. The calculated interest rate used ranges between 1.33% and 3.98%, depending on the length of the SBITA and date of the agreement.

As of June 30, 2026, the capitalized right-to-use assets related to SBITAs were $9,044,432 and the total subscription liability was $3,950,398, of which $1,139,262 is reported as a current liability representing the amount due within the next fiscal year. As of June 30, 2025, the right to use asset was $6,098,702, the total subscription liability was $3,030,518, with the short term subscription payable being $1,049,849.

Note 8 – Long–Term Liabilities (Continued)

C. Subscription Liability (Continued)

Principal and interest payments to maturity as of June 30, 2026 are as follows:

Year ending June 30	Principal	Interest	Total
2027	$ 1,139,262	$ 99,366	$ 1,238,628
2028	1,017,916	71,158	1,089,074
2029	618,724	44,622	663,346
2030	452,950	29,015	481,965
2031	293,406	19,106	312,512
2032-2033	428,140	12,598	440,738
Total	$ 3,950,398	$ 275,865	$ 4,226,263

Note 9 – Risk Management

MTS (including SDTC, SDTI, and MTS - Contracted Services) is self-insured for third party liability claims to a maximum of $7,500,000 per occurrence. Amounts in excess of the self-insured retention limits for public liability are covered through commercial insurance carriers up to $75,000,000. No stop loss or cap coverage is purchased above the $75,000,000 limits. MTS, SDTC, and SDTI purchase all-risk (excluding earthquake) insurance coverage for property damage up to $600,000,000 per occurrence with deductibles ranging from $50,000 to $500,000, depending on the type of property and peril involved. In addition, MTS, SDTC, and SDTI are self-insured for costs arising from employee workers' compensation act benefit claims including employer's liability to a retained limit of $1,000,000 per occurrence. Amounts in excess of $1,000,000 are insured up to statutory limits. MTS, SDTC, and SDTI all finance their respective unemployment insurance liabilities.

MTS, SDTC and SDTI have policies for crime coverage through commercial insurance as well as cyber liability insurance to protect the agencies from third party claims alleging computer security breaches. The crime coverage policy has a limit of $3,000,000 subject to a $25,000 deductible. The cyber liability policy has a limit of $20,000,000 subject to a $250,000 deductible, compared to a limit of $18,000,000 subject to a $250,000 deductible in FY2025. These policies protect against theft, loss or unauthorized disclosure of personally identifiable information. SDTC purchases fiduciary liability coverage through commercial insurance to protect the agency from claims alleging mismanagement of the SDTC Employees' Retirement Plan. The fiduciary liability coverage policy has a limit of $2,000,000 subject to a $25,000 deductible.

Claim expenditures and liabilities in connection with these self-insurance programs are reported when it is probable that a loss has occurred and the amount of that loss can be reasonably estimated. These losses include an estimate of claims that have been incurred but not reported based upon past experience, modified for current trends and information. Claim payments up to $7,500,000 per incident are recorded as risk management expenses in the statements of revenues, expenses, and changes in net position. Claim payments did not exceed insurance coverage in any of the past three years.

Changes in the accrued damage, injury, and employee claims amounts for the past three fiscal years were as follows:

	Beginning of fiscal year	Current year claims and changes in estimates	Claims payments	End of fiscal year
2024	$ 21,543,550	$ 11,976,271	$ (5,400,000)	$ 28,119,821
2025	28,119,821	7,723,591	(6,600,000)	29,243,412
2026	29,243,412	16,274,261	(12,522,000)	32,995,673

Note 9 – Risk Management (Continued)

Following is a summary of accrued damage, injury, and employee claims for fiscal years 2026 and 2025:

	2026	2025
Current portion	$ 12,487,207	$ 9,326,766
Non-current portion	20,508,466	19,916,646
Total	$ 32,995,673	$ 29,243,412

MTS has established a policy to consolidate the minimum balances required in the liability claims reserve accounts of SDTC and SDTI to be held by MTS. The policy also established eligible uses for the MTS reserve account, which included the reimbursement to SDTC and SDTI of awards/settlements of individual liability claims for personal injury and/or property damage in excess of $300,000, but within the self-insurance retention at SDTC and SDTI. In connection with these self-insurance programs, liabilities for MTS, SDTC and SDTI were $32,995,673 at June 30, 2026 and $29,243,412 at June 30, 2025.

The Board has designated $7,500,000 for the purposes of funding the future claims liabilities of MTS, SDTC, and SDTI as of June 30, 2026, which is unchanged from the fiscal year 2025 designation.

Note 10 – Commitments and Contingencies

Construction commitments.

As of June 30, 2026 and 2025, MTS has construction commitment for the following projects.

	2026	2025
Electric bus charging infrastructure	$ 21,780,716	$ 24,477,016
Orange line rail signals	9,427,298	27,237,778
Bus station infrastructure	-	3,463,514
Track and slope construction	2,769,179	-
Pedestrian enhancements	1,206,981	5,523,755
Other construction commitments	904,594	1,656,200
Remaining contractual commitments	$ 36,088,768	$ 62,358,263

Pending legal actions. MTS, SDTC and SDTI have been named in certain legal actions pending at June 30, 2026 and June 30, 2025. While the outcome of these lawsuits is not presently determinable, in the opinion of management of MTS, SDTC and SDTI, based in part on the advice of counsel, the resolution of these matters is not expected to have a material adverse effect on the financial position or results of operations of MTS, SDTC, or SDTI, or is adequately covered by insurance.

Note 11 – Other Postemployment Benefits

U.S. GAAP requires that the reported results for total OPEB liability, deferred outflows of resources and deferred inflows of resources related to OPEB, and OPEB expense must pertain to certain defined timeframes. For this report, the following timeframes are used:

Valuation Date	June 30, 2025
Measurement Date	June 30, 2025
Measurement Period	July 1, 2024 - June 30, 2025

Note 11 – Other Postemployment Benefits (Continued)

***Plan Description*:** MTS is a single employer defined benefit postemployment health care plan that covers eligible retired employees.

***Benefits Provided*:** MTS funds a Health Reimbursement Arrangement (HRA) account for MTS retirees, SDTI retirees and SDTC retirees to help offset the cost of the individual healthcare plan they purchase. The amount of the HRA contribution ranges between $100 and $1,500 per month and is based on the retiree's years of service, former position, Medicare eligibility and enrolled dependents.

Eligibility. Employees are eligible after attaining age/service years of 55/10 for MTS, SDTI Management and SDTC Management, 55/15 for SDTI union and 55/10 for SDTC unions. SDTC union employees must be 65 to participate.

Plan Funding: MTS does not have any assets accumulated in a trust to pay related benefits for the OPEB plan. Benefits are paid to the retirees on a "Pay-As-You-Go" approach.

Employees Covered

As of the June 30, 2026 (measurement date 2025), the following current and former employees were covered by the benefit terms:

	MTS	SDTI	SDTC
Active employees	191	753	778
Inactive employees or beneficiaries currently receiving benefits	27	69	223
Inactive employees entitled to but not yet receiving benefits	-	-	-
Total	218	822	1,001

As of the June 30, 2025 (measurement date 2024), the following current and former employees were covered by the benefit terms:

	MTS	SDTI	SDTC
Active employees	184	735	763
Inactive employees or beneficiaries currently receiving benefits	27	68	226
Inactive employees entitled to but not yet receiving benefits	-	-	-
Total	211	803	989

Actuarial Assumptions

The total OPEB liability, as of June 30, 2026 (measurement date 2025), was determined using the following actuarial assumptions:

	MTS	SDTI	SDTC
Actuarial Cost Method	Entry Age Cost Method (level percentage of pay)		
Valuation Date	June 30, 2025		
Measurement Date	June 30, 2025		
Actuarial Assumptions:			
Discount Rate	4.81% per annum		
Inflation Rate	2.75% per annum		
Salary Increases	Varies by service		
Investment Rate of Return	N/A		
Initial Trend Rate	3.0%		
Ultimate Trend Rate	3.0%		
Mortality Rate	All mortality rates were based on the Pub-2010 mortality tables with fully generational improvement using Scale MP-2021		

Note 11 – Other Postemployment Benefits (Continued)

Discount Rate

The discount rate used to measure the total OPEB liability was 4.81% percent as of the measurement date June 30, 2025 and 4.21% as of the measurement date June 30, 2024. The high-quality municipal bond rate was based on the S&P Municipal Bond 20 Year High Grade Rate Index as published by S&P Dow Jones Indices as of June 30, 2025. The S&P Municipal 20 Year High Grade Rate Index consists of bonds in the S&P Municipal Bond Index with a maturity of 20 years. Eligible bonds must be rated at least AA by Standard and Poor's Ratings Services, Aa2 by Moody's or AA by Fitch. If there are multiple ratings, the lowest rating is used.

Sensitivity of the Total OPEB Liability to Changes in the Discount Rate

The following presents the total OPEB liability of MTS, SDTI and SDTC, as well as what the total OPEB liability would be if it were calculated using a discount rate that is one percentage point lower or one percentage point higher than the current rate, for year ended June 30, 2026 (measurement date 2025):

	MTS	SDTI	SDTC	Aggregate
1% Decrease	3.81%	3.81%	3.81%	3.81%
Total OPEB Liability	$ 7,696,819	$ 14,493,331	$ 15,078,210	$ 37,268,360
Current Discount Rate	4.81%	4.81%	4.81%	4.81%
Total OPEB Liability	$ 6,573,178	$ 12,493,041	$ 13,326,404	$ 32,392,623
1% Increase	5.81%	5.81%	5.81%	5.81%
Total OPEB Liability	$ 5,659,924	$ 10,860,042	$ 11,867,139	$ 28,387,105

The following presents the total OPEB liability of MTS, SDTI and SDTC, as well as what the total OPEB liability would be if it were calculated using a discount rate that is one percentage point lower or one percentage point higher than the current rate, for the year ended June 30, 2025 (measurement date 2024):

	MTS	SDTI	SDTC	Aggregate
1% Decrease	3.21%	3.21%	3.21%	3.21%
Total OPEB Liability	$ 8,168,388	$ 15,088,591	$ 25,123,383	$ 48,380,362
Current Discount Rate	4.21%	4.21%	4.21%	4.21%
Total OPEB Liability	$ 6,982,468	$ 12,970,501	$ 21,294,511	$ 41,247,480
1% Increase	5.21%	5.21%	5.21%	5.21%
Total OPEB Liability	$ 6,022,282	$ 11,248,787	$ 18,226,883	$ 35,497,952

Note 11 – Other Postemployment Benefits (Continued)

Sensitivity of the Total OPEB Liability to Changes in Healthcare Cost Trend Rates

The following presents the total OPEB liability of MTS, SDTI and SDTC, as well as what the total OPEB liability would be if it were calculated using a health care cost trend rates that are one percentage point lower or one percentage point higher than the current rates, for the year ended June 30, 2026 (measurement date 2025):

	MTS	SDTI	SDTC	Aggregate
1% Decrease in Healthcare Cost Trend Rate	2.0% Healthcare Cost Trend Rates			
Total OPEB Liability	$ 5,443,483	$ 10,532,711	$ 11,686,477	$ 27,662,671
Current Healthcare Cost Trend Rate	3.0% Healthcare Cost Trend Rates			
Total OPEB Liability	$ 6,573,178	$ 12,493,041	$ 13,326,404	$ 32,392,623
1% Increase in Healthcare Cost Trend Rate	4.0% Healthcare Cost Trend Rates			
Total OPEB Liability	$ 8,055,298	$ 15,029,407	$ 15,358,144	$ 38,442,849

The following presents the total OPEB liability of MTS, SDTI and SDTC, as well as what the total OPEB liability would be if it were calculated using a health care cost trend rates that are one percentage point lower or one percentage point higher than the current rates, for the year ended June 30, 2025 (measurement date 2024):

	MTS	SDTI	SDTC	Aggregate
1% Decrease in Healthcare Cost Trend Rate	2.0% HRA Contribution Increase		6.00% HMO decreasing to 3.00%	
Total OPEB Liability	$ 5,757,578	$ 10,816,560	$ 17,812,282	$ 34,386,420
Current Healthcare Cost Trend Rate	3.0% HRA Contribution Increase		7.0% HMO decreasing to 4.00%	
Total OPEB Liability	$ 6,982,468	$ 12,970,501	$ 21,294,511	$ 41,247,480
1% Increase in Healthcare Cost Trend Rate	4.0% HRA Contribution Increase		8.00% HMO decreasing to 5.00%	
Total OPEB Liability	$ 8,594,026	$ 15,775,721	$ 25,805,922	$ 50,175,669

Note 11 – Other Postemployment Benefits (Continued)

Change in Total OPEB Liability

At June 30, 2026, the change in the Total OPEB liability is as follows:

	MTS	SDTI	SDTC	Aggregate
Balance at June 30, 2025	$ 6,982,468	$ 12,970,501	$ 21,294,511	$ 41,247,480
Changes Recognized for the Measurement Period:				
Service cost	459,629	634,139	909,128	2,002,896
Interest on the total OPEB liability	310,614	566,319	918,716	1,795,649
Difference between expected and actual experience	(162,014)	272,391	(1,011,016)	(900,639)
Changes in assumptions	(786,927)	(1,365,230)	(1,139,510)	(3,291,667)
Changes in benefit terms	(101,091)	(276,125)	(6,874,672)	(7,251,888)
Benefit payments	(129,501)	(308,954)	(770,753)	(1,209,208)
Net Changes	(409,290)	(477,460)	(7,968,107)	(8,854,857)
Balance at June 30, 2026	$ 6,573,178	$ 12,493,041	$ 13,326,404	$ 32,392,623

At June 30, 2025, the change in the Total OPEB liability is as follows:

	MTS	SDTI	SDTC	Aggregate
Balance at June 30, 2024	$ 6,459,098	$ 12,244,775	$ 20,948,280	$ 39,652,153
Changes Recognized for the Measurement Period:				
Service cost	443,917	613,119	881,770	1,938,806
Interest on the total OPEB liability	282,695	525,726	878,317	1,686,738
Difference between expected and actual experience	-	-	-	-
Changes in assumptions	(85,825)	(153,574)	(275,769)	(515,168)
Benefit payments	(117,417)	(259,545)	(1,138,087)	(1,515,049)
Net Changes	523,370	725,726	346,231	1,595,327
Balance at June 30, 2025	$ 6,982,468	$ 12,970,501	$ 21,294,511	$ 41,247,480

Contributions

The contribution requirements of plan members and MTS, SDTI and SDTC are established and may be amended by MTS Management or the Board of Directors. The contribution required to be made is based on a pay–as–you–go basis (i.e., as medical insurance premiums become due).

For fiscal years 2026 and 2025, the following contributions were made:

	MTS	SDTI	SDTC	Aggregate
2026 Contributions	$ 135,268	$ 317,217	$ 491,543	$ 944,028
2025 Contributions	129,501	308,954	770,753	1,209,208

OPEB Expense and Deferred Outflows/Inflows of Resources Related to OPEB

For the year ended June 30, 2026 and 2025, OPEB expense is included in the accompanying statement of revenues, expenses, and changes in net position as follows:

	MTS	SDTI	SDTC	Aggregate
2026 OPEB Expense	$ 300,385	$ 450,884	$ (7,320,087)	$ (6,568,818)
2025 OPEB Expense	430,841	749,465	(244,361)	935,945

Note 11 – Other Postemployment Benefits (Continued)

OPEB Expense and Deferred Outflows/Inflows of Resources Related to OPEB (Continued)

At June 30, 2026, (measurement date 2025) MTS, SDTI and SDTC reported deferred outflows of resources and deferred inflows of resources related to OPEB from the following sources:

	MTS		SDTI	
	Deferred Outflows of Resources	Deferred Inflows of Resources	Deferred Outflows of Resources	Deferred Inflows of Resources
Contributions made after measurement date	$ 135,268	$ -	$ 317,217	$ -
Difference between expected and actual experience	-	(882,086)	1,169,986	(1,188,742)
Changes in assumptions	614,630	(2,847,420)	1,025,898	(4,394,258)
Total	$ 749,898	$ (3,729,506)	$ 2,513,101	$ (5,583,000)

	SDTC		Aggregate	
	Deferred Outflows of Resources	Deferred Inflows of Resources	Deferred Outflows of Resources	Deferred Inflows of Resources
Contributions made after measurement date	$ 491,543	$ -	$ 944,028	$ -
Difference between expected and actual experience	-	(2,668,214)	1,169,986	(4,739,042)
Changes in assumptions	539,148	(7,853,646)	2,179,676	(15,095,324)
Total	$ 1,030,691	$ (10,521,860)	$ 4,293,690	$ (19,834,366)

At June 30, 2025, (measurement date 2024) MTS, SDTI and SDTC reported deferred outflows of resources and deferred inflows of resources related to OPEB from the following sources:

	MTS		SDTI	
	Deferred Outflows of Resources	Deferred Inflows of Resources	Deferred Outflows of Resources	Deferred Inflows of Resources
Contributions made after measurement date	$ 129,501	$ -	$ 308,954	$ -
Difference between expected and actual experience	-	(838,934)	1,032,248	(1,367,689)
Changes in assumptions	718,599	(2,414,367)	1,207,656	(3,639,941)
Total	$ 848,100	$ (3,253,301)	$ 2,548,858	$ (5,007,630)

	SDTC		Aggregate	
	Deferred Outflows of Resources	Deferred Inflows of Resources	Deferred Outflows of Resources	Deferred Inflows of Resources
Contributions made after measurement date	$ 770,753	$ -	$ 1,209,208	$ -
Difference between expected and actual experience	-	(2,585,899)	1,032,248	(4,792,522)
Changes in assumptions	955,579	(8,475,125)	2,881,834	(14,529,433)
Total	$ 1,726,332	$ (11,061,024)	$ 5,123,290	$ (19,321,955)

The combined $944,028 reported as deferred outflows of resources related to contributions subsequent to the measurement date will be recognized as a reduction of the total OPEB liability in the year ended June 30, 2027 compared to the combined $1,209,208 reported in previous year.

Note 11 – Other Postemployment Benefits (Continued)

OPEB Expense and Deferred Outflows/Inflows of Resources Related to OPEB (Continued)

As of June 30, 2026 (measurement date 2025), other amounts reported as deferred inflows of resources related to OPEB will be recognized as OPEB expense as follows:

Year Ended June 30,	MTS	SDTI	SDTC	Aggregate
2027	$ (368,767)	$ (367,193)	$ (2,065,985)	$ (2,801,945)
2028	(312,130)	(348,506)	(2,065,984)	(2,726,620)
2029	(301,687)	(348,506)	(2,282,514)	(2,932,707)
2030	(301,685)	(348,510)	(2,019,889)	(2,670,084)
2031	(284,807)	(391,125)	(976,238)	(1,652,170)
Thereafter	(1,545,800)	(1,583,276)	(572,102)	(3,701,178)
Total	$ (3,114,876)	$ (3,387,116)	$ (9,982,712)	$ (16,484,704)

In the previous year, other amounts reported as deferred outflows of resources and deferred inflows of resources related to OPEB were:

Year Ended June 30,	MTS	SDTI	SDTC	Aggregate
2026	$ (295,771)	$ (389,384)	$ (2,004,443)	$ (2,689,598)
2027	(295,771)	(283,128)	(1,797,169)	(2,376,068)
2028	(239,134)	(264,441)	(1,797,168)	(2,300,743)
2029	(228,691)	(264,441)	(2,013,698)	(2,506,830)
2030	(228,689)	(264,445)	(1,751,073)	(2,244,207)
Thereafter	(1,246,646)	(1,301,887)	(741,894)	(3,290,427)
Total	$ (2,534,702)	$ (2,767,726)	$ (10,105,445)	$ (15,407,873)

Note 12 – Employee Retirement Systems

A. Summary

Aggregate Net Pension Liability

Aggregate net pension liability is reported in the accompanying statements of net position as follows:

	2026	2025
MTS CalPERS Plans	$ 15,962,022	$ 18,961,578
SDTI CalPERS Plans	33,049,732	43,221,391
SDTI PARS Plan	1,916,237	1,880,966
SDTC Retirement Plan	144,131,425	154,676,640
Total	$ 195,059,416	$ 218,740,575

Note 12 – Employee Retirement Systems (Continued)

A. Summary (Continued)

Deferred Outflows of Resources

Deferred outflows of resources at June 30, 2026 are reported in the accompanying statement of net position as follows:

	Contributions Made After Measurement Date	Difference Between Expected and Actual Experience	Difference Between Projected and Actual Earnings on Pension Plan Investments	Changes in Assumptions	Changes in Employer's Proportion	Difference Between Employer's Contributions and Proportionate Share of Contributions	Total
MTS CalPERS Plans	$ 3,700,677	$ 1,912,633	$ -	$ -	$ 55,437	$ 931,683	$ 6,600,430
SDTI CalPERS Plans	8,232,201	1,492,916	-	1,575,542	-	-	11,300,659
SDTI PARS Plan	428,682	166,520	-	-	-	-	595,202
SDTC Retirement Plan	19,519,107	-	-	-	-	-	19,519,107
Total	$ 31,880,667	$ 3,572,069	$ -	$ 1,575,542	$ 55,437	$ 931,683	$ 38,015,398

Deferred outflows of resources at June 30, 2025 are reported in the accompanying statement of net position as follows:

	Contributions Made After Measurement Date	Difference Between Expected and Actual Experience	Difference Between Projected and Actual Earnings on Pension Plan Investments	Changes in Assumptions	Changes in Employer's Proportion	Difference Between Employer's Contributions and Proportionate Share of Contributions	Total
MTS CalPERS Plans	$ 3,620,191	$ 1,639,402	$ 1,091,595	$ 487,352	$ 124,732	$ 670,440	$ 7,633,712
SDTI CalPERS Plans	7,929,839	503,223	2,437,828	3,151,086	-	-	14,021,976
SDTI PARS Plan	476,841	102,473	-	-	-	-	579,314
SDTC Retirement Plan	18,430,690	-	5,963,236	-	-	-	24,393,926
Total	$ 30,457,561	$ 2,245,098	$ 9,492,659	$ 3,638,438	$ 124,732	$ 670,440	$ 46,628,928

Deferred Inflows of Resources

Deferred inflows of resources at June 30, 2026 are reported in the accompanying statement of net position as follows:

	Difference Between Expected and Actual Experience	Difference Between Projected and Actual Earnings on Pension Plan Investments	Changes in Assumptions	Changes in Employer's Proportion	Difference Between Employer's Contributions and Proportionate Share of Contributions	Total
MTS CalPERS Plans	$ -	$ 2,159,837	$ -	$ 167,526	$ -	$ 2,327,363
SDTI CalPERS Plans	78,544	5,511,588	-	-	-	5,590,132
SDTI PARS Plan	-	324,029	-	-	-	324,029
SDTC Retirement Plan	-	1,424,305	-	-	-	1,424,305
Total	$ 78,544	$ 9,419,759	$ -	$ 167,526	$ -	$ 9,665,829

Note 12 – Employee Retirement Systems (Continued)

A. Summary (Continued)

Deferred inflows of resources at June 30, 2025 are reported in the accompanying statement of net position as follows:

	Difference Between Expected and Actual Experience	Difference Between Projected and Actual Earnings on Pension Plan Investments	Changes in Assumptions	Changes in Employer's Proportion	Difference Between Employer's Contributions and Proportionate Share of Contributions	Total
MTS CalPERS Plans	$ 63,968	$ -	$ -	$ 100,800	$ 17,987	$ 182,755
SDTI CalPERS Plans	204,552	-	-	-	-	204,552
SDTI PARS Plan	-	100,197	28,609	-	-	128,806
Total	$ 268,520	$ 100,197	$ 28,609	$ 100,800	$ 17,987	$ 516,113

Pension Expense

Pension expense is included in the accompanying statements of revenues, expenses, and changes in net position as follows:

	2026	2025
MTS CalPERS Plans	$ 3,879,011	$ 4,414,448
SDTI CalPERS Plans	6,167,425	8,448,293
SDTI PARS Plan	643,288	551,565
SDTC Retirement Plan	15,273,016	21,825,886
Total	$ 25,962,740	$ 35,240,192

B. MTS

General Information about the Pension Plans

Plan Description – All MTS management employees working the equivalent of 1,000 hours per fiscal year are eligible to participate in the MTS Miscellaneous, MTS Miscellaneous PEPRA, or MTS Miscellaneous Second Tier cost–sharing multiple–employer defined benefit pension plans administered by California Public Employees' Retirement System (CalPERS), which acts as a common investment and administrative agent for its participating member employers. Benefit Provisions under the Plans are established by State statutes within the Public Employee's Retirement Law. CalPERS issues publicly available reports that include a full description of the pension plans regarding benefit provisions, assumptions and membership information that can be found on the CalPERS website. Copies of the CalPERS annual financial report may be obtained from the CalPERS Executive Office – 400 P Street, Sacramento, CA 95814.

Note 12 – Employee Retirement Systems (Continued)

B. MTS (Continued)

General Information about the Pension Plans

Benefits Provided – CalPERS provides service retirement and disability benefits, annual cost–of–living adjustments, and death benefits to plan members and beneficiaries. Benefits are based on years of credited service, equal to one year of full–time employment and can only be amended by the MTS Board of Directors.

The Plan's provisions and benefits in effect as of June 30, 2026 are summarized as follows:

MTS Miscellaneous Plan–1223
CLOSED TO NEW MEMBERS

Hire date	Prior to December 24, 2012
Benefit formula	2.7% @ 55
Benefit vesting schedule	5 years service
Benefit payments	Monthly for life
Final Average Compensation Period	12 months
Retirement age	50–55
Monthly benefits, as a % of eligible compensation	2.0%–2.7%
Required employee contribution rates	8.00%
Required employer contribution rates	49.25%
Pre–Retirement Death Benefit	Optional Settlement 2W
Post–Retirement Death Benefit	$500 Lump Sum
Non–Industrial Standard Disability	1.8% of final compensation multiplied by service
Cost of Living Adjustments	2.00%

MTS Miscellaneous Second Tier Plan – 30134

Hire date	On or Between December 24 and 31, 2012 or Grandfathered classic members
Benefit formula	2.0% @ 60
Benefit vesting schedule	5 years service
Benefit payments	Monthly for life
Final Average Compensation Period	12 months
Retirement age	50–63
Monthly benefits, as a % of eligible compensation	1.092%–2.418%
Required employee contribution rates	7.00%
Required employer contribution rates	12.95%
Pre–Retirement Death Benefit	Optional Settlement 2W
Post–Retirement Death Benefit	$500 Lump Sum
Non–Industrial Standard Disability	1.8% of final compensation multiplied by service
Cost of living adjustments	2.00%

Note 12 – Employee Retirement Systems (Continued)

B. MTS (Continued)

General Information about the Pension Plans (Continued)

MTS PEPRA Miscellaneous Plan – 26789

Hire date	On or after January 1, 2013
Benefit formula	2.0% @ 62
Benefit vesting schedule	5 years service
Benefit payments	Monthly for life
Final Average Compensation Period	36 months
Retirement age	52–67
Monthly benefits, as a % of eligible compensation	1.0–2.5%
Required employee contribution rates	7.75%
Required employer contribution rates	8.70%
Pre–Retirement Death Benefit	Optional Settlement 2W
Post–Retirement Death Benefit	$500 Lump Sum
Non–Industrial Standard Disability	1.8% of final compensation multiplied by service
Cost of living adjustments	2.00%

Employees Covered – At June 30, 2026 (measurement date 2025) and June 30, 2025 (measurement date 2024), the following employees were covered by the benefit terms:

	2026	2025
Inactive employees or beneficiaries currently receiving benefits	173	165
Inactive employees entitled to but not yet receiving benefits	70	63
Active employees	189	188
Total	432	416

Contributions – Section 20814(c) of the California Public Employees' Retirement Law (PERL) requires that the employer contribution rates for all public employers be determined on an annual basis by the actuary and shall be effective on the July 1 following notice of a change in the rate. The total plan contributions are determined through the CalPERS' annual actuarial valuation process. For public agency cost–sharing plans, the Plan's actuarially determined rate is based on the estimated amount necessary to pay the Plan's allocated share of the risk pool's costs of benefits earned by employees during the year, and any unfunded accrued liability. The employer is required to contribute the difference between the actuarially determined rate and the contribution rate of employees.

Note 12 – Employee Retirement Systems (Continued)

B. MTS (Continued)

For the years ended June 30, 2026 and 2025 (measurement date 2025 and 2024), the active employee contribution rates and average employer contribution rates were as follows:

	2026		2025	
	Employee Contribution Rate	Employer Contribution Rate	Employee Contribution Rate	Employer Contribution Rate
MTS - Miscellaneous Plan-1223	8.00%	49.25%	8.00%	51.34%
MTS Miscellaneous Second Tier Plan - 30134	7.00%	12.95%	7.00%	11.36%
MTS PEPRA Miscellaneous Plan - 26789	7.75%	8.70%	7.75%	8.29%

For the years ended June 30, 2026 and 2025 (measurement date 2025 and 2024), the plan's proportionate share of aggregate contributions recognized as part of pension expense were:

	2026	2025
Contributions - employer	$ 2,876,449	$ 2,531,250
Contributions - employee	1,020,644	939,581

Pension Liabilities, Pension Expenses and Deferred Outflows/Inflows of Resources Related to Pensions

As of June 30, 2026 and 2025 (measurement dates 2025 and 2024), MTS reported $15,962,022 and $18,961,578 net pension liabilities for its proportionate share of the aggregate net pension liability.

MTS Plans' net pension liability is measured as the proportionate share of the net pension liability. The net pension liability of the Plan is measured as of June 30, 2025, and the total pension liability used to calculate the net pension liability was determined by an actuarial valuation as of June 30, 2024 rolled forward to June 30, 2025 using standard update procedures. MTS's proportion of the net pension liability was based on a projection of the MTS's long–term share of contributions to the pension plans relative to the projected contributions of all participating employers, actuarially determined.

The following is the approach established by the plan actuary to allocate the net pension liability and pension expense to the individual employers within the risk pool:

(1) In determining a cost–sharing plan's proportionate share, total amounts of liabilities and assets are first calculated for the risk pool as a whole on the valuation date (June 30, 2024). The risk pool's fiduciary net position ("FNP") subtracted from its total pension liability ("TPL") determines the net pension liability ("NPL") at the valuation date.

(2) Using standard actuarial roll forward methods, the risk pool TPL is then computed at the measurement date (June 30, 2025). Risk pool FNP at the measurement date is then subtracted from this number to compute the NPL for the risk pool at the measurement date. For purposes of FNP in this step and any later reference thereto, the risk pool's FNP at the measurement date denotes the aggregate risk pool's FNP at June 30, 2025 less the sum of all additional side fund (or unfunded liability) contributions made by all employers during the measurement period (FY2025).

Note 12 – Employee Retirement Systems (Continued)

B. MTS (Continued)

Pension Liabilities, Pension Expenses and Deferred Outflows/Inflows of Resources Related to Pensions (Continued)

(3) The individual plan's TPL, FNP, and NPL are also calculated at the valuation date.

(4) Two ratios are created by dividing the plan's individual TPL and FNP as of the valuation date from step (3) by the amounts in step (1), the risk pool's total TPL and FNP, respectively.

(5) The plan's TPL as of the measurement date is equal to the risk pool TPL generated in step (2) multiplied by the TPL ratio generated in step (4). The plan's FNP as of the measurement date is equal to the FNP generated in step (2) multiplied by the FNP ratio generated in step (4) plus any additional side fund (or unfunded liability) contributions made by the employer on behalf of the plan during the measurement period.

(6) The plan's NPL at the measurement date is the difference between the TPL and FNP calculated in step (5).

MTS's proportionate share of the net pension liability as of June 30, 2025, 2024, and 2023 (measurement dates) were as follows:

Proportion June 30, 2023	0.386620%
Proportion June 30, 2024	0.392040%
Change - Increase (Decrease)	0.005420%
Proportion June 30, 2025	0.400128%
Change - Increase (Decrease)	0.008088%

For the years ended June 30, 2026 and 2025, MTS recognized pension expense of $3,879,011 and $4,414,448, respectively. At June 30, 2026 and 2025, MTS reported deferred outflows of resources and deferred inflows of resources related to pensions from the following sources:

	2026		2025	
	Deferred Outflows of Resources	Deferred Inflows of Resources	Deferred Outflows of Resources	Deferred Inflows of Resources
Contributions made after measurement date	$ 3,700,677	$ -	$ 3,620,191	$ -
Difference between expected and actual experience	1,912,633	-	1,639,402	(63,968)
Changes in assumptions	-	-	487,352	-
Change in employer's proportion	55,437	(167,526)	124,732	(100,800)
Difference between actual and proportionate share of employer contributions	931,683	-	670,440	(17,987)
Net difference between projected and actual earnings on pension plan investments	-	(2,159,837)	1,091,595	-
Total	$ 6,600,430	$ (2,327,363)	$ 7,633,712	$ (182,755)

The $3,700,677 reported as deferred outflows of resources related to contributions subsequent to the measurement date will be recognized as a reduction of the net pension liability in the year ended June 30, 2027.

Note 12 – Employee Retirement Systems (Continued)

B. MTS (Continued)

Pension Liabilities, Pension Expenses and Deferred Outflows/Inflows of Resources Related to Pensions (Continued)

As of the measurement date June 30, 2025, other amounts reported as deferred outflows of resources and deferred inflows of resources related to pensions will be recognized as pension expense as follows:

Year Ended June 30	Amounts
2027	$ 2,422,325
2028	(200,994)
2029	(824,443)
2030	(824,498)
2031	-
Total	$ 572,390

In the previous year, other amounts reported as deferred outflows of resources and deferred inflows of resources related to pensions will be recognized as pension expense as follows:

Year Ended June 30	Amounts
2026	$ 1,339,278
2027	2,719,874
2028	145,691
2029	(374,077)
2030	-
Total	$ 3,830,766

Actuarial Assumptions – The total pension liability in the June 30, 2024 actuarial valuation was determined using the actuarial assumptions:

Valuation Date	June 30, 2024
Measurement Date	June 30, 2025
Actuarial Cost Method	Entry Age Normal
Actuarial Assumptions:	
Discount Rate	6.90%
Inflation	2.30%
Projected Salary Increase	varies by entry age and service
Payroll Growth	2.80%
Investment Rate of Return	6.90%
Mortality	derived using CalPERS membership data for all funds (1)

(1) The mortality table used was developed based on CalPERS specific data. Mortality rates incorporate full generational mortality improvement using 80% of Scale MP-2020 published by the Society of Actuaries

Note 12 – Employee Retirement Systems (Continued)

B. MTS (Continued)

Pension Liabilities, Pension Expenses and Deferred Outflows/Inflows of Resources Related to Pensions (Continued)

Change in Assumptions – In the current and prior year, the actuarial report did not have any changes in assumptions.

Discount Rate – The discount rate used to measure the total pension liability was 6.90 percent. This is based on the long-term expected rate of return on plan assets and is net of investment expenses but not reduced for administrative expenses. In determining the long-term expected rate of return, CalPERS took into account 20-year market return expectations as well as the expected pension fund cash flows. Projected returns for all asset classes are estimated and combined with risk estimates to project compound (geometric) returns over the long term.

Asset Class	Assumed Asset Allocation	Real Return Years (a) (b)
Public Equity	37.00%	4.56%
Private equity	17.00%	5.56%
Fixed Income	28.00%	2.53%
Real Assets	15.00%	3.03%
Private Debt	8.00%	4.93%
Strategic Leverage	-5.00%	1.40%

(a) figures are based on the 2024 Mid-Cycle Asset Liability Management study
(b) an expected annual rate of price inflation of 2.30% was used for this period

The projection of cash flows used to determine the discount rate assumed that contributions from plan members will be made at the current member contribution rates and that contributions from employers will be made at statutorily required rates, actuarially determined. Based on those assumptions, the Plan's fiduciary net position was projected to be available to make all projected future benefit payments of current plan members. Therefore, the long-term expected rate of return on plan investments was applied to all periods of projected benefit payments to determine the total pension liability.

Sensitivity of the Proportionate Share of the Net Pension Liability to Changes in the Discount Rate – The following presents MTS's proportionate share of the net pension liability as of June 30, 2026 and 2025, calculated using the discount rate, as well as what MTS's proportionate share of the net pension liability would be if it were calculated using a discount rate that is one percentage point lower or one percentage point higher than the current rate:

	2026	2025
1% Decrease	5.90%	5.90%
Net Pension Liability	$ 28,235,368	$ 30,468,842
Current Discount Rate	6.90%	6.90%
Net Pension Liability	$ 15,962,022	$ 18,961,578
1% Increase	7.90%	7.90%
Net Pension Liability	$ 5,861,187	$ 9,489,407

Note 12 – Employee Retirement Systems (Continued)

B. MTS (Continued)

Pension Plan Fiduciary Net Position – Detailed information about MTS's pension plan's fiduciary net position is available in the separately issued CalPERS financial reports.

Payable to the Pension Plan – At June 30, 2026, MTS reported a payable of $100,748 for the outstanding amount of contributions to the pension plan required for the current year compared to $87,617 for the year ended June 30, 2025.

C. SDTI

1. CalPERS Plans

Plan Description – All SDTI employees working the equivalent of 1,000 hours per fiscal year are eligible to participate in the SDTI Miscellaneous or PEPRA Miscellaneous Plan, Agent Multiple–Employer defined benefit plans administered by California Public Employees' Retirement System (CalPERS), which acts as a common investment and administrative agent for its participating member employers. Benefit Provisions under the Plans are established by State statutes within the Public Employee's Retirement Law. CalPERS issues publicly available reports that include a full description of the pension plans regarding benefit provisions, assumptions and membership information that can be found on the CalPERS website. Copies of the CalPERS annual financial report may be obtained from the CalPERS Executive Office – 400 P Street, Sacramento, CA 95814.

Benefits Provided – CalPERS provides service retirement and disability benefits, annual cost–of–living adjustments, and death benefits to plan members and beneficiaries. Plan members include both contract and non–contract employees. Benefits are based on years of credited service, equal to one year of full–time employment and can only be amended by the MTS Board of Directors.

The Plans' provisions and benefits in effect as of June 30, 2026 are summarized as follows:

San Diego Trolley Miscellaneous Plan – 1406
Closed to New Members

	Management Employees	Union Employees
Hire date	Prior to January 1, 2013	Prior to January 1, 2013
Benefit formula	2.0% @ 55	2.0% @ 55
Benefit vesting schedule	5 years service	5 years service
Benefit payments	Monthly for life	Monthly for life
Final Average Compensation Period	12 months	12 months
Retirement age	50–63	50–63
Monthly benefits, as a % of eligible compensation	1.426–2.418%	1.426–2.418%
Required employee contribution rates	8.00%	10.97%
Required employer contribution rates	17.94%	14.97%
Pre–Retirement Death Benefit	1959 Survivor Benefit Level 2	1959 Survivor Benefit Level 2
Post–Retirement Death Benefit	$500 Lump Sum	$500 Lump Sum
Cost of living adjustment	2.00%	2.00%
Non–Industrial Standard Disability	1.8% of final compensation multiplied by service	1.8% of final compensation multiplied by service

Note 12 – Employee Retirement Systems (Continued)

C. SDTI (Continued)

1. CalPERS Plans (Continued)

San Diego Trolley PEPRA Miscellaneous Plan – 26965

Hire date	On or After January 1, 2013
Benefit formula	2.0% @ 62
Benefit vesting schedule	5 years service
Benefit payments	Monthly for life
Final Average Compensation Period	36 months
Retirement age	52–67
Monthly benefits, as a % of eligible compensation	1.0–2.5%
Required employee contribution rates	7.50%
Required employer contribution rates	18.94%
Pre–Retirement Death Benefit	1959 Survivor Benefit Level 2
Post–Retirement Death Benefit	$500 Lump Sum
Cost of living adjustment	2.00%
Non–Industrial Standard Disability	1.8% of final compensation multiplied by service

2. PARS Plan

Plan Description – All full–time SDTI management employees employed between October 1, 2003 and December 24, 2012 are eligible to participate in the PARS Retirement Enhancement Plan, a defined benefit plan held by the Public Agency Retirement System Trust, an agent multiple employer retirement trust under Internal Revenue Service Code Section 401(a). The Plan is administered by Public Agency Retirement Services (PARS). Separate information for the Plan is included in another financial report issued by PARS. Copies of the financial report can be obtained in writing from Public Agency Retirement Services, 4350 Von Karman Avenue, Suite 100, Newport Beach, CA 92660.

Benefits Provided – PARS provides supplemental service retirement benefits, annual cost–of–living adjustments, and death benefits to plan members and beneficiaries. Members are eligible to receive benefits if they have retired under CalPERS, have terminated employment, or had their position eliminated due to internal reorganization or mandatory operating budget reductions after January 1, 2004. The Plan benefit supplements member's CalPERS benefit to provide members with an enhanced retirement benefit and MTS management has the authority to amend the Plan's benefit terms. The monthly lifetime benefit is calculated by taking the difference between (1) and (2) below and multiplying it by one–twelfth (1/12):

(1) PARS Age Factor x Benefit Service x Highest Average Annual Compensation (Subject to CalPERS Deductions) during the Last 12 Months of Employment.

(2) CalPERS Age Factor x Benefit Service x Highest Average Annual Compensation (Subject to CalPERS Deductions) during the Last 12 Months of Employment.

Note 12 – Employee Retirement Systems (Continued)

C. SDTI (Continued)

The Plan's provisions and benefits in effect as of June 30, 2026 are summarized as follows:

San Diego Trolley PARS Plan
CLOSED TO NEW MEMBERS

Hire date	Prior to January 1, 2013
Benefit formula	2.7% @ 55
Benefit vesting schedule	5 years service
Benefit payments	Monthly for life
Final Average Compensation Period	12 months
Retirement age	50–63
Monthly benefits, as a % of eligible compensation	0.282–0.574%
Required employee contribution rates	Not Required or Permitted
Required employer contribution rates	15.20%
Pre–Retirement Death Benefit	None
Post–Retirement Death Benefit	Joint–and–100% Survivor Option
Disability Retirement Benefit	None
Cost of Living Adjustment	2.00%

Employees Covered

At June 30, 2026 and 2025 (measurement dates 2025 and 2024), the following employees were covered by the benefit terms for each Plan:

	CalPERS Plan		PARS Plan	
	2026	2025	2026	2025
Inactive employees or beneficiaries currently receiving benefits	364	351	69	67
Inactive employees entitled to but not yet receiving benefits	148	134	3	1
Active employees	747	722	23	27
	1,259	1,207	95	95

Note 12 – Employee Retirement Systems (Continued)

C. SDTI (Continued)

Contributions

1. CalPERS Plans

Section 20814(c) of the California Public Employees' Retirement Law (PERL) requires that the employer contribution rates for all public employers be determined on an annual basis by the actuary and shall be effective on the July 1 following notice of a change in the rate. Funding contributions for both Plans are determined annually on an actuarial basis as of June 30 by CalPERS. The actuarially determined rate is the estimated amount necessary to finance the costs of benefits earned by employees during the year, with an additional amount to finance any unfunded accrued liability. SDTI is required to contribute the difference between the actuarially determined rate and the contribution rate of employees.

For the years ended June 30, 2026 and 2025 (measurement dates 2025 and 2024), the active employee contribution rates and average employer contribution rates were as follows:

	2026		2025	
	Employee	Employer	Employee	Employer
SDTI Miscellaneous Plan 1406 - Management EE	8.00%	17.94%	8.00%	18.38%
SDTI Miscellaneous Plan 1406 - Union EE	10.97%	14.97%	11.19%	15.19%
SDTI Miscellaneous PEPRA Plan 26965	7.50%	18.94%	7.50%	19.38%

For the years ended June 30, 2026 and 2025 (measurement dates 2025 and 2024), the contributions recognized as part of pension expense were:

	CalPERS Plans	
	2026	2025
Contributions - employer	$ 7,929,825	$ 7,017,017
Contributions - employees	3,408,857	3,069,915

2. PARS Plan

Employer contribution rates for the PARS plan are contractually established by the Plan's administrator and agreed to by the employer and shall be effective on the July 1 following notice of a change in the rate. Funding contributions for the Plan are determined biannually on an actuarial basis as of June 30 by PARS. For the year ended June 30, 2025 and 2024 (measurement date) the employer's contribution rate was 15.20%.

For the years June 30, 2026 and 2025 (measurement date 2025 and 2024), the contributions recognized as part of pension expense were:

	PARS Plan	
	2026	2025
Contributions - employer	$ 476,841	$ 300,464
Contributions - employees	-	-

Note 12 – Employee Retirement Systems (Continued)

C. SDTI (Continued)

Net Pension Liability

1. CalPERS Plans

SDTI's net pension liability is measured as the total pension liability less the pension plan's fiduciary net position. The net pension liability of the Plan is measured as of June 30, 2025, using an annual actuarial valuation as of June 30, 2024 rolled forward to June 30, 2025 using standard update procedures. A summary of principal assumptions and methods used to determine the net pension liability is shown below.

Actuarial Assumptions – The total pension liabilities in the June 30, 2024 actuarial valuations were determined using the following actuarial assumptions:

Valuation Date	June 30, 2024
Measurement Date	June 30, 2025
Actuarial Cost Method	Entry Age Normal
Actuarial Assumptions:	
Discount Rate	6.90%
Inflation	2.30%
Projected Salary Increase	varies by entry age and service
Payroll Growth	2.80%
Investment Rate of Return	6.80%
Mortality	Derived using CalPERS' Membership Data for all Funds (1)
Post Retirement Benefit Increase	The lessor of contract COLA or 2.30% until Purchasing Power Protection Allowance floor on purchasing power applies, 2.30% thereafter

(1) The mortality table used was developed based on CalPERS's specific data. Mortality rates incorporate full generational mortality improvement using 80% of Scale MP-2020 published by the Society of Actuaries.

Changes in Assumptions – In the current and previous year, the actuarial report did not have any changes in assumptions.

Discount Rate – The discount rate used to measure the total pension liability was 6.90 percent. This is based on the long-term expected rate of return on plan assets and is net of investment expenses but not reduced for administrative expenses. In determining the long-term expected rate of return, CalPERS took into account 20-year market return expectations as well as the expected pension fund cash flows. Projected returns for all asset classes are estimated and combined with risk estimates to project compound (geometric) returns over the long term.

Asset Class	Assumed Asset Allocation	Real Return Years (a) (b)
Public Equity	37.00%	4.56%
Private equity	17.00%	5.56%
Fixed Income	28.00%	2.53%
Real Assets	15.00%	3.03%
Private Debt	8.00%	4.93%
Strategic Leverage	-5.00%	1.40%

(a) figures are based on the 2024 Mid-Cycle Asset Liability Management study
(b) an expected annual rate of price inflation of 2.30% was used for this period

Note 12 – Employee Retirement Systems (Continued)

C. SDTI (Continued)

Net Pension Liability (Continued)

1. CalPERS Plans (Continued)

The projection of cash flows used to determine the discount rate assumed that contributions from plan members will be made at the current member contribution rates and that contributions from employers will be made at statutorily required rates, actuarially determined. Based on those assumptions, the Plan's fiduciary net position was projected to be available to make all projected future benefit payments of current plan members. Therefore, the long-term expected rate of return on plan investments was applied to all periods of projected benefit payments to determine the total pension liability.

2. PARS Plan

The net pension liability for the PARS Plan is measured as the total pension liability, less the pension plan's fiduciary net position. The net pension liability of the Plan is measured as of June 30, 2025, using an actuarial valuation as of June 30, 2025. A summary of principal assumptions and methods used to determine the net pension liability is shown below.

Actuarial Assumptions – The total pension liability in the June 30, 2025 actuarial valuation was determined using the following actuarial assumptions:

Valuation Date	June 30, 2025
Measurement Date	June 30, 2025
Actuarial Cost Method	Entry Age Normal
Actuarial Assumptions:	
Discount Rate	6.00%
Inflation	2.30%
Salary Increases Including Inflation	Graded rates based on years of services, 3.50% after 30 years of service
Payroll Growth	2.80%
Investment Rate of Return	6.00%
Pre-Retirement Mortality	Consistent with Non-Industrial rates used to value the Miscellaneous Public Agency CalPERS Pension plans after June 30,2021
Post Retirement Benefit Increase	Consistent with the CalPERS Misc. "2.7% at age 55" (20 years of service) rates increased by 20% at each age.

Change in Assumptions – The report did not have any changes in the current year, in the prior year the inflation rate decreased from 2.50% to 2.30%.

Discount Rate – The discount rate used to measure the total pension liability was 6.00 percent was determined by MTS. Below is a projection of the 30 year average return derived by adding expected inflation to expected long-term real returns and reflecting expected volatility and correlation on the Plan's target asset allocation.

Note 12 – Employee Retirement Systems (Continued)

C. SDTI (Continued)

Net Pension Liability (Continued)

2. PARS Plan (Continued)

Discount Rate (Continued)

Asset Class	Target Allocation	Long-Term Expected Arithmetic Real Rate of Return	Long-Term Expected Geometric Real Rate of Return
US Cash	2.00%	0.83%	0.80%
US Corporate Bonds	35.00%	2.91%	2.65%
US High Yield Bonds	3.00%	4.03%	3.48%
US Large Cap Equity	34.20%	5.39%	3.78%
US Small Cap Equity	1.80%	6.80%	4.22%
Foreign Developed Equity	13.50%	6.61%	4.79%
Emerging Markets Equity	4.50%	8.78%	5.73%
US REITs	3.00%	6.71%	4.46%
Infrastructure - Public	3.00%	5.68%	4.18%

(a) Assumed inflation: 2.28% mean and 1.47% standard deviation

Sensitivity of the Net Pension Liability to Changes in the Discount Rate

The following presents SDTI's net pension liability at June 30, 2026 and 2025, calculated using the discount rate, as well as what SDTI's net pension liability would be if it were calculated using a discount rate that is one percentage point lower or one percentage point higher than the current rate:

	CalPERS Plan		PARS Plan	
	2026	2025	2026	2025
1% Decrease	5.90%	5.90%	5.00%	5.00%
Net Pension Liability	$ 67,263,819	$ 75,644,997	$ 3,343,529	$ 3,223,927
Current Discount Rate	6.90%	6.90%	6.00%	6.00%
Net Pension Liability	$ 33,049,732	$ 43,221,391	$ 1,916,237	$ 1,880,966
1% Increase	7.90%	7.90%	7.00%	7.00%
Net Pension Liability	$ 4,965,011	$ 16,613,581	$ 720,228	$ 756,257

Note 12 – Employee Retirement Systems (Continued)

C. SDTI (Continued)

Changes in the Net Pension Liability

1. CalPERS Plans

At June 30, 2026 (measurement date 2025), the change in the Net Pension Liability for the Plan is as follows:

	Total Pension Liability	Plan Fiduciary Net Position	Net Pension Liability
Balance at July 1, 2025	$ 227,539,541	$ 184,318,150	$ 43,221,391
Changes in the year:			
Service cost	6,697,579	-	6,697,579
Interest on the total pension liability	15,698,137	-	15,698,137
Changes of assumptions	-	-	-
Changes of benefits terms	-	-	-
Difference between expected and actual experience	1,451,343	-	1,451,343
Benefit payments, including refunds of member contributions	(9,660,858)	(9,660,858)	-
Net Plan to Plan resource movement	-	-	-
Contributions - employer	-	7,929,825	(7,929,825)
Contributions - employee	-	3,408,857	(3,408,857)
Net investment income	-	22,811,749	(22,811,749)
Administrative expense	-	(131,713)	131,713
Net Changes	14,186,201	24,357,860	(10,171,659)
Balance at June 30, 2026	$ 241,725,742	$ 208,676,010	$ 33,049,732

At June 30, 2025 (measurement date 2024), the change in the Net Pension Liability for the Plan is as follows:

	Total Pension Liability	Plan Fiduciary Net Position	Net Pension Liability
Balance at July 1, 2024	$ 215,258,555	$ 167,316,510	$ 47,942,045
Changes in the year:			
Service cost	6,040,977	-	6,040,977
Interest on the total pension liability	14,787,229	-	14,787,229
Changes of assumptions	-	-	-
Changes of benefits terms	-	-	-
Difference between expected and actual experience	604,484	-	604,484
Benefit payments, including refunds of member contributions	(9,151,704)	(9,151,704)	-
Net Plan to Plan resource movement	-	-	-
Contributions - employer	-	7,017,017	(7,017,017)
Contributions - employee	-	3,069,915	(3,069,915)
Net investment income	-	16,202,558	(16,202,558)
Administrative expense	-	(136,146)	136,146
Net Changes	12,280,986	17,001,640	(4,720,654)
Balance at June 30, 2025	$ 227,539,541	$ 184,318,150	$ 43,221,391

Pension Plan Fiduciary Net Position – Detailed information about each pension plan's fiduciary net position is available in the separately issued CalPERS financial reports.

Note 12 – Employee Retirement Systems (Continued)

C. SDTI (Continued)

Changes in the Net Pension Liability (Continued)

2. PARS Plan

At June 30, 2026 (measurement date 2025), the change in the net pension liability for the Plan is as follows:

	Total Pension Liability	Plan Fiduciary Net Position	Net Pension Liability
Balance at July 1, 2025	$ 11,241,875	$ 9,360,909	$ 1,880,966
Changes in the year:			
Service cost	169,097	-	169,097
Interest on the total pension liability	666,868	-	666,868
Changes of assumptions	-	-	-
Difference between expected and actual experience	582,819	-	582,819
Benefit payments, including refunds of member contributions	(601,789)	(601,789)	-
Contributions - employer	-	476,841	(476,841)
Contributions - employee	-	-	-
Net investment income	-	924,692	(924,692)
Administrative expense	-	(18,020)	18,020
Net Changes	816,995	781,724	35,271
Balance at June 30, 2026	$ 12,058,870	$ 10,142,633	$ 1,916,237

At June 30, 2025 (measurement date 2024), the change in the net pension liability for the Plan is as follows:

	Total Pension Liability	Plan Fiduciary Net Position	Net Pension Liability
Balance at July 1, 2024	$ 10,851,463	$ 8,562,122	$ 2,289,341
Changes in the year:			
Service cost	164,491	-	164,491
Interest on the total pension liability	644,223	-	644,223
Changes of assumptions	(57,219)	-	(57,219)
Difference between expected and actual experience	204,947	-	204,947
Benefit payments, including refunds of member contributions	(566,030)	(566,030)	-
Contributions - employer	-	300,464	(300,464)
Contributions - employee	-	-	-
Net investment income	-	1,080,892	(1,080,892)
Administrative expense	-	(16,539)	16,539
Net Changes	390,412	798,787	(408,375)
Balance at June 30, 2025	$ 11,241,875	$ 9,360,909	$ 1,880,966

Pension Plan Fiduciary Net Position – Detailed information about the PARS Plan's fiduciary net position is available in the separately issued financial reports.

Note 12 – Employee Retirement Systems (Continued)

C. SDTI (Continued)

Pension Expenses and Deferred Outflows/Inflows of Resources Related to Pensions

For the years ended June 30, 2026 and 2025, SDTI recognized pension expense of $6,810,713 and $8,999,858, respectively. At June 30, 2026 and 2025, SDTI reported deferred outflows of resources and deferred inflows of resources related to pensions from the following sources:

	CalPERS Plans			
	2026		2025	
	Deferred Outflows of Resources	Deferred Inflows of Resources	Deferred Outflows of Resources	Deferred Inflows of Resources
Contributions made after measurement date	$ 8,232,201	$ -	$ 7,929,839	$ -
Difference between expected and actual experience	1,492,916	(78,544)	503,223	(204,552)
Changes in assumptions	1,575,542	-	3,151,086	-
Net difference between projected and actual earnings on pension plan investments	-	(5,511,588)	2,437,828	-
Total	$ 11,300,659	$ (5,590,132)	$ 14,021,976	$ (204,552)

	PARS Plan			
	2026		2025	
	Deferred Outflows of Resources	Deferred Inflows of Resources	Deferred Outflows of Resources	Deferred Inflows of Resources
Contributions made after measurement date	$ 428,682	$ -	$ 476,841	$ -
Difference between expected and actual experience	166,520	-	102,473	-
Changes in assumptions	-	-	-	(28,609)
Net difference between projected and actual earnings on pension plan investments	-	(324,029)	-	(100,197)
Total	$ 595,202	$ (324,029)	$ 579,314	$ (128,806)

The combined $8,660,883 reported as deferred outflows of resources related to contributions subsequent to the measurement date for the two plans will be recognized as a reduction of the net pension liability in the year ended June 30, 2027 compared to $8,406,680 for the previous year.

As of the measurement date, June 30, 2025, other amounts reported as deferred outflows of resources and deferred inflows of resources related to pensions will be recognized as pension expense as follows:

Year Ended June 30	SDTI CalPERS Plan	SDTI PARS Plan
2027	$ 4,128,576	$ 329,693
2028	(2,274,203)	(225,135)
2029	(2,555,413)	(188,615)
2030	(1,820,634)	(73,452)
2031	-	-
Total	$ (2,521,674)	$ (157,509)

Note 12 – Employee Retirement Systems (Continued)

C. SDTI (Continued)

Pension Expenses and Deferred Outflows/Inflows of Resources Related to Pensions (Continued)

In the previous year, other amounts reported as deferred outflows of resources and deferred inflows of resources related to pensions will be recognized as pension expense as follows:

Year Ended June 30	SDTI CalPERS Plan	SDTI PARS Plan
2026	$ 1,505,332	$ 3,885
2027	5,823,007	236,626
2028	(579,772)	(151,682)
2029	(860,982)	(115,162)
2030	-	-
Total	$ 5,887,585	$ (26,333)

Payable to the Pension Plan

At June 30, 2026, SDTI reported a payable of $219,136 to CalPERS and $12,000 to PARS for the outstanding amount of contributions to the pension plans required for the fiscal year compared to $190,386 payable to CalPERS and $11,121 payable to PARS for the year ended June 30, 2025.

D. SDTC

General Information about the Pension Plans

Plan Description – The San Diego Transit Corporation Employees' Retirement Plan (the "Plan") is a single employer defined benefit plan which is currently open to all full-time non-contract employees and certain part-time non-contract employees who have completed one year of service in which they have worked at least 1,000 hours. Effective May 1, 2011, employees in the International Brotherhood of Electrical Workers, Local 465 (the "IBEW") bargaining unit hired after May 1, 2011 participate in a separate defined contribution 401(a) plan. Effective November 1, 2012, employees in the Amalgamated Transit Union, Local 1309 (the "ATU") bargaining unit hired after November 1, 2012 participate in a separate defined contribution 401(a) plan. Therefore, as of November 1, 2012 the Plan was closed to new ATU and IBEW entrants, but remains open for non-contract employees.

The SDTC Plan issues a publicly available financial report that includes financial statements and required supplementary information. The financial report may be obtained by writing to San Diego Transit Corporation, 1255 Imperial Avenue, Suite 1000, San Diego, CA 92101.

Note 12 – Employee Retirement Systems (Continued)

D. SDTC (Continued)

Benefits Provided – The SDTC Plan provides retirement and disability benefits and annual cost-of-living adjustments for Plan members as well as joint-survivor benefits to beneficiaries. Benefits are based on years of credited service, equal to one year of full-time employment and can only be amended by the MTS Board of Directors.

The Plan's provisions and benefits as of June 30, 2026 are as follows:

	San Diego Transit Pension Plan – Non–Contract Employees	
Hire date	Prior to January 1, 2013	On or after January 1, 2013
Benefit formula	2% @ 55	2% @ 62
Benefit vesting schedule	5 years service	5 years service
Benefit payments	Monthly for life	Monthly for life
Final Average Compensation Period	12 months	36 months
Retirement age	53–63	52–67
Monthly benefits, as a % of eligible compensation	1.742%–2.418%	1.0%–2.5%
Required employee contribution rates	8.00%	9.00%
Required employer contribution rates	85.94%	84.94%
Pre–Retirement Death Benefit	50% Joint & Survivor	
Post–Retirement Death Benefit	Based on benefit election	
Non–Industrial Standard Disability	1.5% times average monthly final earnings times credited years of service	
Cost of living adjustment	Lesser of CPI or 2.0%	

	SDTC Contract Employees	
	ATU – Closed Plan	**IBEW – Closed Plan**
Hire date	Prior to November 25, 2012	Prior to January 1, 2013
Benefit formula	2% @ 55	2% @ 55
Benefit vesting schedule	5 years service	5 years service
Benefit payments	Monthly for life	Monthly for life
Final Average Compensation Period	36 months	36 months
Retirement age	53–63	55–65
Monthly benefits, as a % of eligible compensation	1.742%–2.418%	2.0%–2.418%
Required employee contribution rates	8.00%	8.00%
Required employer contribution rates	85.94%	85.94%
Pre–Retirement Death Benefit	50% Joint & Survivor	
Post–Retirement Death Benefit	Based on benefit election	
Disability	1.5% times average monthly final earnings times credited years of service	

Note 12 – Employee Retirement Systems (Continued)

D. SDTC (Continued)

General Information about the Pension Plans (Continued)

Employees Covered – At June 30, 2026 and 2025 (measurement date 2025 and 2024), the following employees were covered by the benefit terms for the Plan:

	2026	2025
Inactive employees or beneficiaries currently receiving benefits	1,067	1,064
Inactive employees entitled to but not yet receiving benefits	169	172
Active employees	268	289
	1,504	1,525

Contributions – Section 20814(c) of the California Public Employees' Retirement Law (PERL) requires that the employer contribution rates for all public employers be determined on an annual basis by the actuary and shall be effective on the July 1 following notice of a change in the rate. The employer is required to contribute the difference between the actuarially determined rate and the contribution rate of employees. For the period ended June 30, 2025 (measurement date), the active employee contribution rate is 8.00-9.00% of annual pay, and the average employer's contribution rate is 85.69% of annual payroll compared to 8.00-9.00% and 80.26% for the previous year.

For the year ended June 30, 2026 and 2025 (measurement date 2025 and 2024), the contributions recognized as part of pension expense for the Plan were as follows:

	2026	2025
Contributions - employer	$ 18,430,690	$ 17,213,854
Contributions - employees	1,740,617	1,712,165

Net Pension Liability

SDTC's net pension liability is measured as the total pension liability less the pension plan's fiduciary net position. The net pension liability of the Plan is measured as of July 1, 2025, using an annual actuarial valuation as of July 1, 2025.

Actuarial Assumptions – The total pension liabilities in the July 1, 2025 actuarial valuations were determined using the following actuarial assumptions:

Valuation Date	July 1, 2025
Measurement Date	July 1, 2025
Actuarial Cost Method	Individual entry age to final decrement
Actuarial Assumptions:	
Discount Rate	6.00%
Inflation	2.50%
Projected Salary Increase	2.5% plus merit component based on employee classification and years of service
Investment Rate of Return (1)	6.00%
Mortality	Generational improvements from the base year 2016 using Scale MP-2020
COLA Increase - Non-Contract Members	2.00%

(1) Net of pension plan investment expenses.

Note 12 – Employee Retirement Systems (Continued)

D. SDTC (Continued)

Net Pension Liability (Continued)

Changes in Assumptions – In the current year and previous year, the actuarial reports did not have any changes in assumptions.

Discount Rate – The discount rate used to measure the Total Pension Liability was 6.00%.

SDTC has assumed that plan member contributions will continue to be made at the required rates. Employer contributions are assumed to be made in accordance with the historical and legal practice of contributing to the Plan based on an actuarially determined contribution. This includes contributions equal to the employer portion of the the Entry Age normal cost for members as of the valuation date, plus the expected administrative expenses, plus an amortization payment of the Unfunded Actuarial Liability. The amortization payment consists of several layers as follows:

- 15-year closed periods for actuarial experience gains and losses; the period for future experience gains and losses will be reduced so that the UAL layer will be fully amortized by June 30, 2037.
- 25-year closed amortization of the Unfunded Actuarial Liability as of June 30, 2012.

While a formal cash flow projection was not performed as described under Paragraph 27, we believe the above approach satisfies the alternative approach described in Paragraph 29. Therefore, the long-term expected rate of return on Plan investments was applied to all periods of projected benefit payments to determine the Total Pension Liability.

According to Paragraph 30 of GASB Statement 68, the long–term expected rate of return should be determined net of pension plan investment expenses but without reduction for pension plan administrative expenses. The 6.00% investment return assumption used in the Total Pension Liability is net of investment expenses only.

The table below reflects long–term expected real rate of return by asset class. The critical inputs of the asset allocation model are the expected risk, return and correlations of different asset classes.

Asset Class	Target Allocation	Real Return (a)
United States Equity	25.00%	3.29%
International Equity	20.00%	5.85%
Fixed Income	55.00%	1.75%

(a) an expected inflation of 2.5% is used.

Note 12 – Employee Retirement Systems (Continued)

D. SDTC (Continued)

Net Pension Liability (Continued)

Sensitivity of the Net Pension Liability to Changes in the Discount Rate – The following presents the net pension liability for the SDTC Plan as of June 30, 2026 and 2025, calculated using the discount rate, as well as what SDTC's net pension liability would be if it were calculated using a discount rate that is one percentage point lower or one percentage point higher than the current rate:

	2026	2025
1% Decrease	5.00%	5.00%
Net Pension Liability	$ 180,640,280	$ 190,914,098
Current Discount Rate	6.00%	6.00%
Net Pension Liability	$ 144,131,425	$ 154,676,640
1% Increase	7.00%	7.00%
Net Pension Liability	$ 113,048,230	$ 123,839,774

Changes in Net Pension Liability

At June 30, 2026 (measurement date 2025), the change in the Net Pension Liability for the SDTC Plan is as follows:

	Total Pension Liability	Plan Fiduciary Net Position	Net Pension Liability
Balance at July 1, 2025	$ 347,621,403	$ 192,944,763	$ 154,676,640
Changes in the year:			
Service cost	3,507,119	-	3,507,119
Interest on the total pension liability	20,361,790	-	20,361,790
Changes of assumptions	-	-	-
Difference between expected and actual experience	4,395,702	-	4,395,702
Benefit payments, including refunds of member contributions	(23,878,520)	(23,878,520)	-
Contributions - employer	-	18,430,690	(18,430,690)
Contributions - employee	-	1,740,617	(1,740,617)
Net investment income	-	18,903,889	(18,903,889)
Administrative expense	-	(265,370)	265,370
Net Changes	4,386,091	14,931,306	(10,545,215)
Balance at June 30, 2026	$ 352,007,494	$ 207,876,069	$ 144,131,425

Note 12 – Employee Retirement Systems (Continued)

D. SDTC (Continued)

Changes in Net Pension Liability (Continued)

At June 30, 2025 (measurement date 2024), the change in the Net Pension Liability for the SDTC Plan is as follows:

	Total Pension Liability	Plan Fiduciary Net Position	Net Pension Liability
Balance at July 1, 2024	$ 342,852,868	$ 183,172,692	$ 159,680,176
Changes in the year:			
Service cost	3,557,763	-	3,557,763
Interest on the total pension liability	20,095,752	-	20,095,752
Changes of assumptions	-	-	-
Difference between expected and actual experience	4,417,320	-	4,417,320
Benefit payments, including refunds of member contributions	(23,302,300)	(23,302,300)	-
Contributions - employer	-	17,213,854	(17,213,854)
Contributions - employee	-	1,712,165	(1,712,165)
Net investment income	-	14,304,780	(14,304,780)
Administrative expense	-	(156,428)	156,428
Net Changes	4,768,535	9,772,071	(5,003,536)
Balance at June 30, 2025	$ 347,621,403	$ 192,944,763	$ 154,676,640

Pension Plan Fiduciary Net Position – Detailed information about the SDTC Plan's fiduciary net position is available in the separately issued financial reports. The financial report may be obtained by writing to San Diego Transit Corporation, 1255 Imperial Avenue, Suite 1000, San Diego, CA 92101.

Pension Expenses and Deferred Outflows/Inflows of Resources Related to Pensions

For the years ended June 30, 2026 and 2025, SDTC recognized pension expense of $15,273,016 and $21,825,886, respectively. At June 30, 2026 and 2025, SDTC reported deferred outflows of resources and deferred inflows of resources related to pensions from the following sources:

	2026		2025	
	Deferred Outflows of Resources	Deferred Inflows of Resources	Deferred Outflows of Resources	Deferred Inflows of Resources
Contributions made after measurement date	$ 19,519,107	$ -	$ 18,430,690	$ -
Net difference between projected and actual earnings on pension plan investments	-	(1,424,305)	5,963,236	-
Total	$ 19,519,107	$ (1,424,305)	$ 24,393,926	$ -

Note 12 – Employee Retirement Systems (Continued)

D. SDTC (Continued)

Pension Expenses and Deferred Outflows/Inflows of Resources Related to Pensions (Continued)

The $19,519,107 reported as deferred outflows of resources related to contributions subsequent to the measurement date will be recognized as a reduction of the net pension liability in the year ended June 30, 2027 compared to $18,430,690 for the previous year. Other amounts reported as deferred outflows of resources and deferred inflows of resources related to pensions will be recognized as pension expense as follows:

Year Ended June 30	Amounts
2027	$ 4,610,144
2028	(2,366,908)
2029	(2,178,612)
2030	(1,488,929)
2031	-
Total	$ (1,424,305)

In the previous year, other amounts reported as deferred outflows of resources and deferred inflows of resources related to pensions were:

Year Ended June 30	Amounts
2026	$ 1,431,825
2027	6,099,073
2028	(877,979)
2029	(689,683)
2030	-
Total	$ 5,963,236

Payable to the Pension Plan

At June 30, 2026, SDTC reported a payable of $1,640,798 for the outstanding amount of contributions to the pension plan required for the fiscal year compared to $1,546,162 for the year ended June 30, 2025.

Note 13 – Other Required Individual Disclosures

A. Deficit Net Position

Contracted Services, SDTC and SDTI had unrestricted net position deficits as of June 30, 2026 and 2025. MTS fully funds the operations for Contracted Services, SDTC and SDTI, however they do not provide subsidy for estimated liabilities, such as Pension, OPEB, Leases, Compensated Absences and Accrued Damage, Injury and Employee Claims. Those expenses are funded in the years actual expenses are incurred leading to the operators reflecting these deficits.

	2026	2025
MTS Contracted Services	$ (9,818,507)	$ (9,760,994)
San Diego Transit Corporation	(201,568,085)	(176,510,271)
San Diego Trolley, Inc.	(61,787,963)	(32,113,475)

Note 14 – Net Investment in Capital Assets

At June 30, 2026 and 2025, the net investment in capital assets consisted of the following:

	2026	2025
Capital assets, net	$ 3,098,303,724	$ 3,162,129,739
Cash Restricted for capital support, Retention trust account (see Note 2)	308,589	1,934,753
Less: Retentions payable from restricted assets	(308,589)	(1,934,753)
Less: Retentions payable	(2,033,207)	(524,301)
Less: Lease liabilities	(10,550,732)	(10,339,540)
Less: Subscription liabilities	(3,950,398)	(3,030,518)
Net investment in capital assets	$ 3,081,769,387	$ 3,148,235,380

Note 15 – Change in Accounting Principle – GASB 103 Reclassification

In accordance with GASB Statement No. 103, Financial Reporting Model Improvements, certain items on the 2025 Statement of Revenues, Expenses, and Changes in Net Position have been reclassified. Public support revenues are now separately presented as noncapital subsidies or capital support revenues based on the nature and restrictions of the funding. Amounts previously included in passenger revenue totaling $11,988,193 were reclassified to noncapital subsidies, consisting of $5,500,000 of TransNet funds and $6,488,193 of other local subsidies. Capital support revenues and capital contributions are presented within nonoperating revenues (expenses).

	Passenger Revenue	Nonoperating Revenues/(Expenses)	Noncapital Subsidies	Capital Contributions
June 30, 2025, as originally reported	$ 77,868,768	$ 453,194,384	$ -	$ 476,785
Passenger revenue	(11,988,193)	-	-	-
Federal revenue	-	(124,583,699)	124,583,699	-
Transportation Development Act funds	-	(97,120,058)	97,120,058	-
State Transit Assistance funds	-	(8,146,048)	8,146,048	-
State revenue - other	-	(9,205,223)	9,205,223	-
TransNet funds	-	(73,965,206)	79,465,206	-
Other local subsidies	-	(4,351,768)	10,839,961	-
Capital contributions, net	-	476,785		(476,785)
June 30, 2025, as reclassified	$ 65,880,575	$ 136,299,167	$ 329,360,195	$ -

Note 16 – Other Non-Operating Expense

On January 22, 2024, San Diego, CA was hit by a historic flood causing an estimated $19 million in damage to the Trolley System. The destruction was widespread impacting track, stations, buildings and equipment. In Fiscal Year 2026, MTS incurred $1.4 million of expenses reimbursable by insurance and $147 thousand in expenses that are not expected to be covered by insurance compared to $2.4 million and $ 1.2 million in FY2025. The expenses that were not offset with insurance proceeds are included in the financial statements as Other Non-Operating Expenses. Once all expenses are final, the agency will be seeking financial assistance from both California Governor's Office of Emergency Services (Cal OES) and Federal Emergency Management Agency (FEMA). The financial assistance will be reported as subsidy revenue when all applicable eligibility requirements have been met. MTS also has several capital replacement projects related to the flood. In the current fiscal year, $820 thousand was spent and $572 thousand was capitalized and in the prior fiscal year $1.8 million was spent and $1.9 million was capitalized. MTS anticipates an additional $1.4 million in capital expenses and $177 thousand in operating expenses as MTS continues to design and rebuild the retaining wall washed out in the flood.

Note 17 – Subsequent Events

Subsequent events have been evaluated through November 5, 2026, the date the financial statements were available to be issued. There are no subsequent events to report for the financial reporting period ended June 30, 2026.

This page intentionally left blank.

REQUIRED SUPPLEMENTARY INFORMATION
(Unaudited)

San Diego Metropolitan Transit System
Required Supplementary Information (Unaudited)
Last Ten Fiscal Years

SCHEDULE OF PROPORTIONATE SHARE OF THE NET PENSION LIABILITY
MTS

Measurement Period, Year Ended June 30:	2025	2024	2023	2022	2021
Proportion of the net pension liability	0.40013%	0.39204%	0.38662%	0.37942%	0.43072%
Proportionate share of the net pension liability	$ 15,962,022	$ 18,961,578	$ 19,332,817	$ 17,754,063	$ 8,178,565
Covered payroll	$ 18,955,284	$ 16,641,398	$ 15,217,610	$ 14,346,741	$ 14,166,669
Proportionate share of the net pension liability as percentage of covered payroll	84.21%	113.94%	127.04%	123.75%	57.73%
Plan's fiduciary net position as percentage of the total pension liability	82.45%	77.67%	75.35%	75.69%	87.57%
Proportionate share of aggregate employer contributions	$ 2,876,449	$ 2,531,250	$ 2,456,504	$ 2,867,564	$ 2,265,608

San Diego Metropolitan Transit System
Required Supplementary Information (Unaudited) (Continued)
Last Ten Fiscal Years

SCHEDULE OF PROPORTIONATE SHARE OF THE NET PENSION LIABILITY (CONTINUED)
MTS

Measurement Period, Year Ended June 30:	2020	2019	2018	2017	2016
Proportion of the net pension liability	0.35975%	0.35122%	0.34449%	0.34040%	0.33571%
Proportionate share of the net pension liability	$ 15,174,709	$ 14,064,659	$ 12,982,663	$ 13,418,753	$ 11,480,319
Covered payroll	$ 13,715,993	$ 12,892,323	$ 12,873,186	$ 11,809,510	$ 11,078,469
Proportionate share of the net pension liability as percentage of covered payroll	110.64%	109.09%	100.85%	113.63%	103.63%
Plan's fiduciary net position as percentage of the total pension liability	74.92%	75.16%	75.65%	72.65%	72.53%
Proportionate share of aggregate employer contributions	$ 2,024,949	$ 1,763,681	$ 1,536,182	$ 1,348,728	$ 1,896,142

San Diego Metropolitan Transit System
Required Supplementary Information (Unaudited) (Continued)
Last Ten Fiscal Years

SCHEDULE OF CHANGES IN NET PENSION LIABILITY AND RELATED RATIOS
SDTI CALPERS PLANS

Measurement Period, Year Ended June 30:	2025	2024	2023	2022	2021
Total Pension Liability					
Service cost	$ 6,697,579	$ 6,040,977	$ 5,794,970	$ 5,576,840	$ 4,670,260
Interest on total pension liability	15,698,137	14,787,229	13,977,882	13,189,942	12,372,042
Difference between expected and actual experience	1,451,343	604,484	56,691	(392,728)	(284,762)
Changes in assumptions	-	-	-	7,877,718	-
Changes in benefit terms	-	-	216,615	-	-
Benefit payments, including refunds of employee contributions	(9,660,858)	(9,151,704)	(8,389,627)	(7,069,799)	(6,645,332)
Net change in total pension liability	14,186,201	12,280,986	11,656,531	19,181,973	10,112,208
Total pension liability - beginning	227,539,541	215,258,555	203,602,024	184,420,051	174,307,843
Total pension liability - ending (a)	$ 241,725,742	$ 227,539,541	$ 215,258,555	$ 203,602,024	$ 184,420,051
Plan fiduciary net position					
Contributions - employer	$ 7,929,825	$ 7,017,017	$ 6,229,147	$ 5,769,619	$ 5,237,955
Contributions - employee	3,408,857	3,069,915	2,463,713	2,366,931	2,398,196
Net investment income	22,811,749	16,202,558	9,825,840	(12,824,227)	31,172,082
Benefit payments, including refunds of employee contributions	(9,660,858)	(9,151,704)	(8,389,627)	(7,069,799)	(6,645,332)
Net plan to plan resource movement	-	-	-	-	-
Administrative expense	(131,713)	(136,146)	(115,673)	(105,380)	(136,995)
Net change in plan fiduciary net position	24,357,860	17,001,640	10,013,400	(11,862,856)	32,025,906
Plan fiduciary net position - beginning	184,318,150	167,316,510	157,303,110	169,165,966	137,140,060
Plan fiduciary net position - ending (b)	$ 208,676,010	$ 184,318,150	$ 167,316,510	$ 157,303,110	$ 169,165,966
Net pension liability - ending (a) - (b)	$ 33,049,732	$ 43,221,391	$ 47,942,045	$ 46,298,914	$ 15,254,085
Plan fiduciary net position as a percentage of the total pension liability	86.33%	81.00%	77.73%	77.26%	91.73%
Covered payroll	$ 45,086,390	$ 40,234,632	$ 37,077,411	$ 35,512,059	$ 33,604,962
Plan net pension liability as a percentage of covered payroll	73.30%	107.42%	129.30%	130.38%	45.39%

Notes to Schedule:

Benefit changes: The figures above do not include any liability impact that may have resulted from plan changes which occurred after the June 30, 2022 valuation date.

Changes of assumptions (measurement date)
*2022 - Payroll growth increased to 2.80 percent from 2.75 percent.
*2022 - Increased to inflation decreased from 2.50 percent from 2.30 percent.
*2022 - Discount rate decreased to 6.90 percent from 7.15 percent.
*2022 - Investment rate of return decreased to 6.90 percent from 7.15 percent.
*2018 - Demographic assumptions and inflation rate were changed in accordance to CalPERS Experience Study and Review December 2017.
*2017 - Discount rate decreased to 7.15 percent from 7.65 percent.

San Diego Metropolitan Transit System
Required Supplementary Information (Unaudited) (Continued)
Last Ten Fiscal Years

SCHEDULE OF CHANGES IN NET PENSION LIABILITY AND RELATED RATIOS (CONTINUED)
SDTI CALPERS PLANS

Measurement Period, Year Ended June 30:	2020	2019	2018	2017	2016
Total Pension Liability					
Service cost	$ 4,479,774	$ 4,304,517	$ 4,029,579	$ 3,882,206	$ 3,580,302
Interest on total pension liability	11,672,869	10,947,906	10,112,324	9,611,237	9,201,415
Difference between expected and actual experience	355,799	2,647,270	(498,533)	(2,759,754)	375,697
Changes in assumptions	-	-	(1,064,034)	8,593,509	-
Changes in benefit terms	-	-	-	-	-
Benefit payments, including refunds of employee contributions	(5,723,615)	(5,389,412)	(5,090,945)	(4,901,765)	(4,345,171)
Net change in total pension liability	10,784,827	12,510,281	7,488,391	14,425,433	8,812,243
Total pension liability - beginning	163,523,016	151,012,735	143,524,344	129,098,911	120,286,668
Total pension liability - ending (a)	$ 174,307,843	$ 163,523,016	$ 151,012,735	$ 143,524,344	$ 129,098,911
Plan fiduciary net position					
Contributions - employer	$ 4,532,160	$ 3,824,864	$ 3,342,623	$ 2,835,680	$ 2,659,911
Contributions - employee	2,108,348	2,075,270	2,034,672	1,806,506	1,778,990
Net investment income	6,512,893	8,009,279	9,482,977	11,214,548	628,353
Benefit payments, including refunds of employee contributions	(5,723,615)	(5,389,412)	(5,090,945)	(4,901,765)	(4,345,171)
Net plan to plan resource movement	-	(86,676)	(281)	-	-
Administrative expense	(183,118)	281	(506,849)	(149,699)	(61,391)
Net change in plan fiduciary net position	7,246,668	8,433,606	9,262,197	10,805,270	660,692
Plan fiduciary net position - beginning	129,893,392	121,459,786	112,197,589	101,392,319	100,731,627
Plan fiduciary net position - ending (b)	$ 137,140,060	$ 129,893,392	$ 121,459,786	$ 112,197,589	$ 101,392,319
Net pension liability - ending (a) - (b)	$ 37,167,783	$ 33,629,624	$ 29,552,949	$ 31,326,755	$ 27,706,592
Plan fiduciary net position as a percentage of the total pension liability	78.68%	79.43%	80.43%	78.17%	78.54%
Covered payroll	$ 31,913,060	$ 29,886,251	$ 27,790,199	$ 26,643,371	$ 27,247,357
Plan net pension liability as a percentage of covered payroll	116.47%	112.53%	106.34%	117.58%	101.69%

Notes to Schedule:

Benefit changes: The figures above do not include any liability impact that may have resulted from plan changes which occurred after the June 30, 2022 valuation date.

Changes of assumptions (measurement date)
*2022 - Payroll growth increased to 2.80 percent from 2.75 percent.
*2022 - Increased to inflation decreased from 2.50 percent from 2.30 percent.
*2022 - Discount rate decreased to 6.90 percent from 7.15 percent.
*2022 - Investment rate of return decreased to 6.90 percent from 7.15 percent.
*2018 - Demographic assumptions and inflation rate were changed in accordance to CalPERS Experience Study and Review December 2017.
*2017 - Discount rate decreased to 7.15 percent from 7.65 percent.

San Diego Metropolitan Transit System
Required Supplementary Information (Unaudited) (Continued)
Last Ten Fiscal Years

SCHEDULE OF CHANGES IN NET PENSION LIABILITY AND RELATED RATIOS
SDTI PARS PLAN

Measurement Period, Year Ended June 30:	2025	2024	2023	2022	2021
Total Pension Liability					
Service cost	$ 169,097	$ 164,491	$ 199,311	$ 193,977	$ 201,071
Interest on total pension liability	666,868	644,223	628,518	566,474	590,139
Difference between expected and actual experience	582,819	204,947	-	177,780	-
Changes in assumptions	-	(57,219)	-	552,904	-
Changes in benefit terms	-	-	-	-	-
Benefit payments, including refunds of employee contributions	(601,789)	(566,030)	(497,452)	(428,359)	(415,242)
Net change in total pension liability	816,995	390,412	330,377	1,062,776	375,968
Total pension liability - beginning	11,241,875	10,851,463	10,521,086	9,458,310	9,082,342
Total pension liability - ending (a)	$ 12,058,870	$ 11,241,875	$ 10,851,463	$ 10,521,086	$ 9,458,310
Plan fiduciary net position					
Contributions - employer	$ 476,841	$ 300,464	$ 318,025	$ 348,656	$ 358,879
Contributions - employee	-	-	-	-	-
Net investment income	924,692	1,080,892	662,626	(1,370,500)	2,025,536
Benefit payments, including refunds of employee contributions	(601,789)	(566,030)	(497,452)	(428,359)	(415,242)
Administrative expense	(18,020)	(16,539)	(18,958)	(17,388)	(16,382)
Net change in plan fiduciary net position	781,724	798,787	464,241	(1,467,591)	1,952,791
Plan fiduciary net position - beginning	9,360,909	8,562,122	8,097,881	9,565,472	7,612,681
Plan fiduciary net position - ending (b)	$ 10,142,633	$ 9,360,909	$ 8,562,122	$ 8,097,881	$ 9,565,472
Net pension liability (asset) - ending (a) - (b)	$ 1,916,237	$ 1,880,966	$ 2,289,341	$ 2,423,205	$ (107,162)
Plan fiduciary net position as a percentage of the total pension liability	84.11%	83.27%	78.90%	76.97%	101.13%
Covered payroll	$ 3,175,938	$ 3,201,890	$ 3,466,427	$ 3,927,255	$ 4,471,089
Plan net pension liability as a percentage of covered payroll	60.34%	58.75%	66.04%	61.70%	-2.40%

Notes to Schedule:

Benefit changes: The figures above do not include any liability impact that may have resulted from plan changes which occurred after the June 30, 2024 valuation date.

Changes in Assumption (measurement date):

*2024 - Inflation rate decreased from 2.50 percent to 2.30 percent.
*2022 - Investment rate of return decreased from 6.50 to 6.00 percent.
*2022 - Discount rate decreased from 6.50 to 6.00 percent.
*2020 - Inflation rate decreased from 2.75 to 2.50 percent.
*2020 - Payroll growth rate decreased from 3.00 to 2.75 percent.
*2018 - Investment rate of return decreased from 7.0 to 6.5 percent.
*2016 - Inflation rate decreased from 3.0 to 2.75 percent.
*2016 - Salary scale, retirement and pre-retirement mortality assumptions were updated.

San Diego Metropolitan Transit System
Required Supplementary Information (Unaudited) (Continued)
Last Ten Fiscal Years

SCHEDULE OF CHANGES IN NET PENSION LIABILITY AND RELATED RATIOS (CONTINUED)
SDTI PARS PLAN

Measurement Period, Year Ended June 30:	2020	2019	2018	2017	2016
Total Pension Liability					
Service cost	$ 195,690	$ 226,689	$ 198,627	$ 230,296	$ 223,588
Interest on total pension liability	591,918	565,523	587,363	556,089	523,457
Difference between expected and actual experience	(262,427)	-	(652,788)	-	(166,133)
Changes in assumptions	(164,168)	-	473,927	-	321,921
Changes in benefit terms	-	-	-	-	-
Benefit payments, including refunds of employee contributions	(372,953)	(337,875)	(313,613)	(302,460)	(273,201)
Net change in total pension liability	(11,940)	454,337	293,516	483,925	629,632
Total pension liability - beginning	9,094,282	8,639,945	8,346,429	7,862,504	7,232,872
Total pension liability - ending (a)	$ 9,082,342	$ 9,094,282	$ 8,639,945	$ 8,346,429	$ 7,862,504
Plan fiduciary net position					
Contributions - employer	$ 436,518	$ 443,125	$ 549,296	$ 605,864	$ 547,473
Contributions - employee	-	-	-	-	-
Net investment income	186,614	413,503	458,921	638,858	(59,981)
Benefit payments, including refunds of employee contributions	(372,953)	(337,875)	(313,613)	(302,460)	(273,201)
Administrative expense	(15,143)	(14,630)	(17,012)	(13,417)	(14,665)
Net change in plan fiduciary net position	235,036	504,123	677,592	928,845	199,626
Plan fiduciary net position - beginning	7,377,645	6,873,522	6,195,930	5,267,085	5,067,459
Plan fiduciary net position - ending (b)	$ 7,612,681	$ 7,377,645	$ 6,873,522	$ 6,195,930	$ 5,267,085
Net pension liability (asset) - ending (a) - (b)	$ 1,469,661	$ 1,716,637	$ 1,766,423	$ 2,150,499	$ 2,595,419
Plan fiduciary net position as a percentage of the total pension liability	83.82%	81.12%	79.56%	74.23%	66.99%
Covered payroll	$ 4,351,424	$ 4,909,640	$ 4,766,641	$ 5,170,611	$ 5,020,011
Plan net pension liability as a percentage of covered payroll	33.77%	34.96%	37.06%	41.59%	51.70%

Notes to Schedule:

Benefit changes: The figures above do not include any liability impact that may have resulted from plan changes which occurred after the June 30, 2024 valuation date.

Changes in Assumption (measurement date):

*2024 - Inflation rate decreased from 2.50 percent to 2.30 percent.
*2022 - Investment rate of return decreased from 6.50 to 6.00 percent.
*2022 - Discount rate decreased from 6.50 to 6.00 percent.
*2020 - Inflation rate decreased from 2.75 to 2.50 percent.
*2020 - Payroll growth rate decreased from 3.00 to 2.75 percent.
*2018 - Investment rate of return decreased from 7.0 to 6.5 percent.
*2016 - Inflation rate decreased from 3.0 to 2.75 percent.
*2016 - Salary scale, retirement and pre-retirement mortality assumptions were updated.

San Diego Metropolitan Transit System
Required Supplementary Information (Unaudited) (Continued)
Last Ten Fiscal Years

SCHEDULE OF CHANGES IN NET PENSION LIABILITY AND RELATED RATIOS
SDTC PLAN

Measurement Period, Year Ended June 30:	2025	2024	2023	2022	2021
Total Pension Liability					
Service cost	$ 3,507,119	$ 3,557,763	$ 3,615,035	$ 3,612,367	$ 3,087,757
Interest on total pension liability	20,361,790	20,095,752	19,776,787	19,441,516	20,767,402
Difference between expected and actual experience	4,395,702	4,417,320	4,943,085	4,856,802	3,560,873
Changes in assumptions	-	-	-	-	10,215,184
Changes in benefit terms	-	-	-	-	-
Benefit payments, including refunds of employee contributions	(23,878,520)	(23,302,300)	(22,630,610)	(22,029,157)	(21,531,678)
Net change in total pension liability	4,386,091	4,768,535	5,704,297	5,881,528	16,099,538
Total pension liability - beginning	347,621,403	342,852,868	337,148,571	331,267,043	315,167,505
Total pension liability - ending (a)	$ 352,007,494	$ 347,621,403	$ 342,852,868	$ 337,148,571	$ 331,267,043
Plan fiduciary net position					
Contributions - employer	$ 18,430,690	$ 17,213,854	$ 16,157,770	$ 15,838,082	$ 23,718,402
Contributions - employee	1,740,617	1,712,165	1,719,444	1,621,654	1,950,898
Net investment income	18,903,889	14,304,780	11,403,121	(22,759,878)	34,664,950
Benefit payments, including refunds of employee contributions	(23,878,520)	(23,302,300)	(22,630,610)	(22,029,157)	(21,531,678)
Administrative expense	(265,370)	(156,428)	(354,459)	(265,106)	(252,541)
Net change in plan fiduciary net position	14,931,306	9,772,071	6,295,266	(27,594,405)	38,550,031
Plan fiduciary net position - beginning	192,944,763	183,172,692	176,877,426	204,471,831	165,921,800
Plan fiduciary net position - ending (b)	$ 207,876,069	$ 192,944,763	$ 183,172,692	$ 176,877,426	$ 204,471,831
Net pension liability - ending (a) - (b)	$ 144,131,425	$ 154,676,640	$ 159,680,176	$ 160,271,145	$ 126,795,212
Plan fiduciary net position as a percentage of the total pension liability	59.05%	55.50%	53.43%	52.46%	61.72%
Covered payroll	$ 24,011,424	$ 23,668,509	$ 23,631,077	$ 25,059,762	$ 24,891,340
Plan net pension liability as a percentage of covered payroll	600.26%	653.51%	675.72%	639.56%	509.39%

Notes to Schedule:

Benefit changes: The figures above do not include any liability impact that may have resulted from plan changes which occurred after the July 1, 2023 valuation date.

Changes of assumptions (measurement date)

*2021 - Discount rate decreased from 6.75 to 6.0 percent.
*2021 - Inflation rate decreased from 2.75 to 2.5 percent.
*2021 - Expected rate of return on assets decreased from 6.75 to 6.0 percent.
*2021 - COLA increase changed from 2.0 to 2.5 percent.
*2019 - Investment rate of return decreased from 7.0 to 6.75 percent.
*2018 - Valuation salary changed from using the most recent pensionable pay preceding the valuation date to a two-year average of pay from the two years preceding the valuation date.
*2016 - Investment rate of return decreased from 7.5 to 7.0 percent.
*2016 - Inflation decreased from 3.0 to 2.75 percent.
*2016 - Revisions were made to merit pay increases, mortality, disability, service retirements and terminations.

San Diego Metropolitan Transit System
Required Supplementary Information (Unaudited) (Continued)
Last Ten Fiscal Years

SCHEDULE OF CHANGES IN NET PENSION LIABILITY AND RELATED RATIOS (CONTINUED)
SDTC PLAN

Measurement Period, Year Ended June 30:	2020	2019	2018	2017	2016
Total Pension Liability					
Service cost	$ 3,326,248	$ 3,345,262	$ 3,559,738	$ 3,660,961	$ 3,469,595
Interest on total pension liability	20,793,979	20,568,075	20,325,978	19,885,608	18,865,499
Difference between expected and actual experience	(3,159,945)	3,139,304	(240,474)	1,185,687	(2,174,475)
Changes in assumptions	-	7,536,766	(640,322)	-	29,699,872
Changes in benefit terms	-	-	-	-	-
Benefit payments, including refunds of employee contributions	(20,712,755)	(19,969,862)	(18,715,199)	(17,977,346)	(17,350,158)
Net change in total pension liability	247,527	14,619,545	4,289,721	6,754,910	32,510,333
Total pension liability - beginning	314,919,978	300,300,433	296,010,712	289,255,802	256,745,469
Total pension liability - ending (a)	$ 315,167,505	$ 314,919,978	$ 300,300,433	$ 296,010,712	$ 289,255,802
Plan fiduciary net position					
Contributions - employer	$ 14,709,528	$ 13,633,181	$ 13,020,223	$ 12,649,101	$ 10,711,282
Contributions - employee	2,017,164	2,074,025	1,751,616	2,047,593	1,754,869
Net investment income	24,666	8,415,801	8,792,300	12,216,936	(540,093)
Benefit payments, including refunds of employee contributions	(20,712,755)	(19,969,862)	(18,715,199)	(17,977,346)	(17,350,158)
Administrative expense	(256,420)	(252,585)	(244,890)	(234,128)	(290,381)
Net change in plan fiduciary net position	(4,217,817)	3,900,560	4,604,050	8,702,156	(5,714,481)
Plan fiduciary net position - beginning	170,139,617	166,239,057	161,635,007	152,932,851	158,647,332
Plan fiduciary net position - ending (b)	$ 165,921,800	$ 170,139,617	$ 166,239,057	$ 161,635,007	$ 152,932,851
Net pension liability - ending (a) - (b)	$ 149,245,705	$ 144,780,361	$ 134,061,376	$ 134,375,705	$ 136,322,951
Plan fiduciary net position as a percentage of the total pension liability	52.65%	54.03%	55.36%	54.60%	52.87%
Covered payroll	$ 25,826,289	$ 27,121,687	$ 29,672,305	$ 31,660,643	$ 31,048,663
Plan net pension liability as a percentage of covered payroll	577.88%	533.82%	451.81%	424.43%	439.06%

Notes to Schedule:

Benefit changes: The figures above do not include any liability impact that may have resulted from plan changes which occurred after the July 1, 2023 valuation date.

Changes of assumptions (measurement date)

*2021 - Discount rate decreased from 6.75 to 6.0 percent.
*2021 - Inflation rate decreased from 2.75 to 2.5 percent.
*2021 - Expected rate of return on assets decreased from 6.75 to 6.0 percent.
*2021 - COLA increase changed from 2.0 to 2.5 percent.
*2019 - Investment rate of return decreased from 7.0 to 6.75 percent.
*2018 - Valuation salary changed from using the most recent pensionable pay preceding the valuation date to a two-year average of pay from the two years preceding the valuation date.
*2016 - Investment rate of return decreased from 7.5 to 7.0 percent.
*2016 - Inflation decreased from 3.0 to 2.75 percent.
*2016 - Revisions were made to merit pay increases, mortality, disability, service retirements and terminations.

San Diego Metropolitan Transit System
Required Supplementary Information (Unaudited) (Continued)
Last Ten Fiscal Years

SCHEDULE OF CONTRIBUTIONS
MTS

Fiscal Year Ended June 30:	2026	2025	2024	2023	2022
Actuarially determined contribution	$ 3,700,677	$ 3,620,191	$ 3,117,363	$ 2,960,147	$ 2,772,487
Contributions in relation to the actuarially determined contribution	(3,700,677)	(3,620,191)	(3,117,363)	(2,960,147)	(2,772,487)
Contribution deficiency (excess)	$ -	$ -	$ -	$ -	$ -
Covered payroll	$ 20,006,115	$ 18,955,284	$ 16,641,398	$ 15,217,610	$ 14,346,741
Contributions as a percentage of covered payroll	18.50%	19.10%	18.73%	19.45%	19.32%

Notes to Schedule:

Methods and assumptions used to determine contribution rates

The actuarial methods and assumption used to set the actuarially determined contributions for Fiscal Year 2026 were derived from the June 30, 2022 funding valuation report.

Actuarial cost method	Entry Age Actuarial Cost method
Amortization method/period	For details, see June 30, 2022 Funding Valuation Report
Asset valuation method	Fair value of assets
Inflation	2.30%
Salary increases	Varies based on entry age and service
Payroll growth	2.80%
Investment rate of return	6.80% net of pension plan investment and administrative expenses.
Retirement age	The probabilities of retirement are based on the 2021 CalPERS Experience Study and Review of Actuarial Assumptions.
Mortality	The probabilities of mortality are based on the 2021 CalPERS Experience Study and Review of Actuarial Assumptions. Mortality rates incorporate full generational mortality improvement using 80% of Scale MP-2020 published by the Society of Actuaries.

San Diego Metropolitan Transit System
Required Supplementary Information (Unaudited) (Continued)
Last Ten Fiscal Years

SCHEDULE OF CONTRIBUTIONS (CONTINUED)
MTS

Fiscal Year Ended June 30:	2021	2020	2019	2018	2017
Actuarially determined contribution	$ 2,580,445	$ 2,320,104	$ 2,041,117	$ 1,896,639	$ 1,731,711
Contributions in relation to the actuarially determined contribution	(2,580,445)	(2,320,104)	(2,041,117)	(1,896,639)	(1,731,711)
Contribution deficiency (excess)	$ -	$ -	$ -	$ -	$ -
Covered payroll	$ 14,166,669	$ 13,715,993	$ 12,892,323	$ 12,873,186	$ 11,809,510
Contributions as a percentage of covered payroll	18.21%	16.92%	15.83%	14.73%	14.66%

Notes to Schedule:

Methods and assumptions used to determine contribution rates

The actuarial methods and assumption used to set the actuarially determined contributions for Fiscal Year 2026 were derived from the June 30, 2022 funding valuation report.

Actuarial cost method	Entry Age Actuarial Cost method
Amortization method/period	For details, see June 30, 2022 Funding Valuation Report
Asset valuation method	Fair value of assets
Inflation	2.30%
Salary increases	Varies based on entry age and service
Payroll growth	2.80%
Investment rate of return	6.80% net of pension plan investment and administrative expenses.
Retirement age	The probabilities of retirement are based on the 2021 CalPERS Experience Study and Review of Actuarial Assumptions.
Mortality	The probabilities of mortality are based on the 2021 CalPERS Experience Study and Review of Actuarial Assumptions. Mortality rates incorporate full generational mortality improvement using 80% of Scale MP-2020 published by the Society of Actuaries.

San Diego Metropolitan Transit System
Required Supplementary Information (Unaudited) (Continued)
Last Ten Fiscal Years

SCHEDULE OF CONTRIBUTIONS
SDTI CALPERS PLAN

Fiscal Year Ended June 30:	2026	2025	2024	2023	2022
Actuarially determined contribution	$ 8,232,201	$ 7,929,825	$ 7,016,748	$ 6,229,147	$ 5,769,619
Contributions in relation to the actuarially determined contribution	(8,232,201)	(7,929,825)	(7,016,748)	(6,229,147)	(5,769,619)
Contribution deficiency (excess)	$ -	$ -	$ -	$ -	$ -
Covered payroll	$ 48,330,737	$ 45,086,390	$ 40,234,632	$ 37,077,411	$ 35,512,059
Contributions as a percentage of covered payroll	17.03%	17.59%	17.44%	16.80%	16.25%

Notes to Schedule:

Methods and assumptions used to determine contribution rates

The actuarial methods and assumptions used to set the actuarially determined contributions for Fiscal Year 2026 were derived from the June 30, 2022 funding valuation report.

Actuarial cost method	Entry Age Normal Actuarial; Cost method
Amortization method/period	For details, see June 30, 2022 Funding Valuation Report
Asset valuation method	Fair value of assets
Inflation	2.30%
Salary increases	Varies based on entry age and service
Payroll growth	2.80%
Investment rate of return	6.80% net of pension plan investment and administrative expenses.
Retirement age	The probabilities of retirement are based on the 2021 CalPERS Experience Study and Review of Actuarial Assumptions.
Mortality	The probabilities of mortality are based on the 2021 CalPERS Experience Study and Review of Actuarial Assumptions. Mortality rates incorporate full generational mortality improvement using 80% of Scale MP-2020 published by the Society of Actuaries.

San Diego Metropolitan Transit System
Required Supplementary Information (Unaudited) (Continued)
Last Ten Fiscal Years

SCHEDULE OF CONTRIBUTIONS (CONTINUED)
SDTI CALPERS PLAN

Fiscal Year Ended June 30:	2021	2020	2019	2018	2017
Actuarially determined contribution	$ 5,237,955	$ 4,532,160	$ 3,824,864	$ 3,266,081	$ 2,835,680
Contributions in relation to the actuarially determined contribution	(5,237,955)	(4,532,160)	(3,824,864)	(3,266,081)	(2,835,680)
Contribution deficiency (excess)	$ -	$ -	$ -	$ -	$ -
Covered payroll	$ 33,604,962	$ 31,913,060	$ 29,886,251	$ 27,790,199	$ 26,643,371
Contributions as a percentage of covered payroll	15.59%	14.20%	12.80%	11.75%	10.64%

Notes to Schedule:

Methods and assumptions used to determine contribution rates

The actuarial methods and assumptions used to set the actuarially determined contributions for Fiscal Year 2026 were derived from the June 30, 2022 funding valuation report.

Actuarial cost method	Entry Age Normal Actuarial; Cost method
Amortization method/period	For details, see June 30, 2022 Funding Valuation Report
Asset valuation method	Fair value of assets
Inflation	2.30%
Salary increases	Varies based on entry age and service
Payroll growth	2.80%
Investment rate of return	6.80% net of pension plan investment and administrative expenses.
Retirement age	The probabilities of retirement are based on the 2021 CalPERS Experience Study and Review of Actuarial Assumptions.
Mortality	The probabilities of mortality are based on the 2021 CalPERS Experience Study and Review of Actuarial Assumptions. Mortality rates incorporate full generational mortality improvement using 80% of Scale MP-2020 published by the Society of Actuaries.

San Diego Metropolitan Transit System
Required Supplementary Information (Unaudited) (Continued)
Last Ten Fiscal Years

SCHEDULE OF CONTRIBUTIONS
SDTI PARS PLAN

Fiscal Year Ended June 30:	2026	2025	2024	2023	2022
Actuarially determined contribution	$ 428,096	$ 482,743	$ 288,810	$ 312,672	$ 334,820
Contributions in relation to the actuarially determined contribution	(428,682)	(476,841)	(300,463)	(318,025)	(348,656)
Contribution deficiency (excess)	$ (586)	$ 5,902	$ (11,653)	$ (5,353)	$ (13,836)
Covered payroll	$ 2,816,419	$ 3,175,938	$ 3,201,890	$ 3,466,427	$ 3,927,255
Contributions as a percentage of covered payroll	15.22%	15.01%	9.38%	9.17%	8.88%

Notes to Schedule:

Methods and assumptions used to determine contribution rates

The actuarial methods and assumptions used to set the actuarially determined contributions for Fiscal Year 2026 were derived from the June 30, 2024 funding valuation report.

Valuation date	June 30, 2024
Actuarial cost method	Entry Age Normal
Amortization method	Level dollar
Amortization period	10 years as of valuation date
Asset valuation method	5-year smoothed fair value
Inflation	2.30%
Salary increases	Varies based on entry age and service
Payroll growth	2.80%
Investment rate of return	6.00%

San Diego Metropolitan Transit System
Required Supplementary Information (Unaudited) (Continued)
Last Ten Fiscal Years

SCHEDULE OF CONTRIBUTIONS (CONTINUED)
SDTI PARS PLAN

Fiscal Year Ended June 30:	2021	2020	2019	2018	2017
Actuarially determined contribution	$ 381,185	$ 408,250	$ 459,504	$ 460,930	$ 499,993
Contributions in relation to the actuarially determined contribution	(358,878)	(418,735)	(435,748)	(549,296)	(605,864)
Contribution deficiency (excess)	$ 22,307	$ (10,485)	$ 23,756	$ (88,366)	$ (105,871)
Covered payroll	$ 4,471,089	$ 4,351,424	$ 4,909,640	$ 4,766,641	$ 5,170,611
Contributions as a percentage of covered payroll	8.03%	9.62%	8.88%	11.52%	11.72%

Notes to Schedule:

Methods and assumptions used to determine contribution rates

The actuarial methods and assumptions used to set the actuarially determined contributions for Fiscal Year 2026 were derived from the June 30, 2024 funding valuation report.

Valuation date	June 30, 2024
Actuarial cost method	Entry Age Normal
Amortization method	Level dollar
Amortization period	10 years as of valuation date
Asset valuation method	5-year smoothed fair value
Inflation	2.30%
Salary increases	Varies based on entry age and service
Payroll growth	2.80%
Investment rate of return	6.00%

San Diego Metropolitan Transit System
Required Supplementary Information (Unaudited) (Continued)
Last Ten Fiscal Years

SCHEDULE OF CONTRIBUTIONS
SDTC PLAN

Fiscal Year Ended June 30:	2026	2025	2024	2023	2022
Actuarially determined contribution	$ 19,519,107	$ 18,430,690	$ 17,213,854	$ 16,125,384	$ 15,838,082
Contributions in relation to the actuarially determined contribution	(19,519,107)	(18,430,690)	(17,213,854)	(16,125,384)	(15,838,082)
Contribution deficiency (excess)	$ -	$ -	$ -	$ -	$ -
Covered payroll	$ 23,076,736	$ 24,011,424	$ 23,668,509	$ 23,631,077	$ 25,059,762
Contributions as a percentage of covered payroll	84.58%	76.76%	72.73%	68.24%	63.20%

Notes to Schedule:

Methods and assumptions used to determine contribution rates

The actuarial methods and assumptions used to set the actuarially determined contributions for Fiscal Year 2026 were derived from the July 1, 2023 funding valuation report.

Valuation date	July 1, 2023
Actuarial cost method	Entry Age
Amortization method/period	Level percent of payroll, closed 25-year period
Asset valuation method	5-year smoothed fair value
Salary increases	2.5% plus merit component based on employee classification and years of services.
Inflation rate	2.50%
Discount rate	6.0% net of pension plan investment expenses.
Mortality	For ATU and IBEW Actives, Cheiron's ATU Non-Annuitant mortality with generational improvements from the base year 2016 using Scale MP-2020. For Clerical and Non-Contract Actives, the 2010 Pub-G Employee mortality with generational improvements from the base year 2010 using Scale MP-2020

San Diego Metropolitan Transit System
Required Supplementary Information (Unaudited) (Continued)
Last Ten Fiscal Years

SCHEDULE OF CONTRIBUTIONS (CONTINUED)
SDTC PLAN

Fiscal Year Ended June 30:	2021	2020	2019	2018	2017
Actuarially determined contribution	$ 17,585,592	$ 14,709,813	$ 13,633,181	$ 13,020,223	$ 12,649,101
Contributions in relation to the actuarially determined contribution	(23,718,402)	(14,709,813)	(13,633,181)	(13,020,223)	(12,649,101)
Contribution deficiency (excess)	$ (6,132,810)	$ -	$ -	$ -	$ -
Covered payroll	$ 24,891,340	$ 25,826,289	$ 27,121,687	$ 29,672,305	$ 31,660,643
Contributions as a percentage of covered payroll	95.29%	56.96%	50.27%	43.88%	39.95%

Notes to Schedule:

Methods and assumptions used to determine contribution rates

The actuarial methods and assumptions used to set the actuarially determined contributions for Fiscal Year 2026 were derived from the July 1, 2023 funding valuation report.

Valuation date	July 1, 2023
Actuarial cost method	Entry Age
Amortization method/period	Level percent of payroll, closed 25-year period
Asset valuation method	5-year smoothed fair value
Salary increases	2.5% plus merit component based on employee classification and years of services.
Inflation rate	2.50%
Discount rate	6.0% net of pension plan investment expenses.
Mortality	For ATU and IBEW Actives, Cheiron's ATU Non-Annuitant mortality with generational improvements from the base year 2016 using Scale MP-2020. For Clerical and Non-Contract Actives, the 2010 Pub-G Employee mortality with generational improvements from the base year 2010 using Scale MP-2020

San Diego Metropolitan Transit System
Required Supplementary Information (Unaudited) (Continued)
Last Ten Fiscal Years*

SCHEDULE OF CHANGES IN THE TOTAL OPEB LIABILITY AND RELATED RATIOS
MTS

Measurement period, year ended June 30:	2025	2024	2023	2022	2021
Total OPEB Liability					
Service cost	$ 459,629	$ 443,917	$ 461,314	$ 714,088	$ 559,935
Interest	310,614	282,695	291,679	200,714	211,713
Change of benefit terms	(101,091)	-	-	-	-
Difference between expected and actual experience	(162,014)	-	(668,252)	-	(31,742)
Change in assumptions	(786,927)	(85,825)	(221,195)	(2,608,790)	465,523
Benefit payments, including refunds of member contributions	(129,501)	(117,417)	(147,799)	(110,701)	(112,510)
Net change in total OPEB liability	(409,290)	523,370	(284,253)	(1,804,689)	1,092,919
Total OPEB liability - beginning	6,982,468	6,459,098	6,743,351	8,548,040	7,455,121
Total OPEB liability - ending (a)	$ 6,573,178	$ 6,982,468	$ 6,459,098	$ 6,743,351	$ 8,548,040
OPEB fiduciary net position					
Contributions - employer	$ 129,501	$ 117,417	$ 147,799	$ 110,701	$ 112,510
Net investment income	-	-	-	-	-
Benefit payments, including refunds of member contributions	(129,501)	(117,417)	(147,799)	(110,701)	(112,510)
Administrative expense	-	-	-	-	-
Net change in plan fiduciary net position	-	-	-	-	-
Plan fiduciary net position - beginning	-	-	-	-	-
Plan fiduciary net position - ending (b)	$ -	$ -	$ -	$ -	$ -
Plan net OPEB liability - ending (a) - (b)	$ 6,573,178	$ 6,982,468	$ 6,459,098	$ 6,743,351	$ 8,548,040
Plan fiduciary net position as a percentage of the total OPEB liability	0.00%	0.00%	0.00%	0.00%	0.00%
Covered-employee payroll	$ 19,176,414	$ 16,877,267	$ 15,418,605	$ 14,503,909	$ 14,147,812
Plan net OPEB liability as a percentage of covered employee payroll	34.28%	41.37%	41.89%	46.49%	60.42%

Note to schedule: There are no assets accumulated in a trust that meets the criteria of GASB codification P22.101 or P52.101 to pay related benefits for the OPEB plan.

*Ten year historical information is not yet available.

San Diego Metropolitan Transit System
Required Supplementary Information (Unaudited) (Continued)
Last Ten Fiscal Years*

SCHEDULE OF CHANGES IN THE TOTAL OPEB LIABILITY AND RELATED RATIOS (CONTINUED)
MTS

Measurement period, year ended June 30:	2020	2019	2018	2017
Total OPEB Liability				
Service cost	$ 544,949	$ 452,623	$ 450,678	$ 504,282
Interest	217,111	224,774	203,185	171,522
Change of benefit terms	-	-	-	-
Difference between expected and actual experience	(206,133)	(324,826)	-	-
Change in assumptions	610,704	139,049	(104,394)	(566,410)
Benefit payments, including refunds of member contributions	(117,063)	(111,141)	(99,520)	(96,621)
Net change in total OPEB liability	1,049,568	380,479	449,949	12,773
Total OPEB liability - beginning	6,405,553	6,025,074	5,575,125	5,562,352
Total OPEB liability - ending (a)	$ 7,455,121	$ 6,405,553	$ 6,025,074	$ 5,575,125
OPEB fiduciary net position				
Contributions - employer	$ 117,063	$ 111,141	$ 99,520	$ 96,621
Net investment income	-	-	-	-
Benefit payments, including refunds of member contributions	(117,063)	(111,141)	(99,520)	(96,621)
Administrative expense	-	-	-	-
Net change in plan fiduciary net position	-	-	-	-
Plan fiduciary net position - beginning	-	-	-	-
Plan fiduciary net position - ending (b)	$ -	$ -	$ -	$ -
Plan net OPEB liability - ending (a) - (b)	$ 7,455,121	$ 6,405,553	$ 6,025,074	$ 5,575,125
Plan fiduciary net position as a percentage of the total OPEB liability	0.00%	0.00%	0.00%	0.00%
Covered-employee payroll	$ 12,699,847	$ 13,522,496	$ 12,763,760	$ 12,392,000
Plan net OPEB liability as a percentage of covered employee payroll	58.70%	47.37%	47.20%	44.99%

Note to schedule: There are no assets accumulated in a trust that meets the criteria of GASB codification P22.101 or P52.101 to pay related benefits for the OPEB plan.

*Ten year historical information is not yet available.

San Diego Metropolitan Transit System
Required Supplementary Information (Unaudited) (Continued)
Last Ten Fiscal Years*

SCHEDULE OF CHANGES IN THE TOTAL OPEB LIABILITY AND RELATED RATIOS
SDTI

Measurement period, year ended June 30:	2025	2024	2023	2022	2021
Total OPEB Liability					
Service cost	$ 634,139	$ 613,119	$ 467,782	$ 749,568	$ 577,191
Interest	566,319	525,726	460,997	317,424	386,140
Change of benefit terms	(276,125)	-	-	-	-
Difference between expected and actual experience	272,391	-	1,112,998	-	(1,764,102)
Change in assumptions	(1,365,230)	(153,574)	(505,754)	(3,912,097)	832,716
Benefit payments, including refunds of member contributions	(308,954)	(259,545)	(187,732)	(138,350)	(181,540)
Net change in total OPEB liability	(477,460)	725,726	1,348,291	(2,983,455)	(149,595)
Total OPEB liability - beginning	12,970,501	12,244,775	10,896,484	13,879,939	14,029,534
Total OPEB liability - ending (a)	$ 12,493,041	$ 12,970,501	$ 12,244,775	$ 10,896,484	$ 13,879,939
OPEB fiduciary net position					
Contributions - employer	$ 308,954	$ 259,545	$ 187,732	$ 138,350	$ 181,540
Benefit payments, including refunds of member contributions	(308,954)	(259,545)	(187,732)	(138,350)	(181,540)
Administrative expense	-	-	-	-	-
Net change in plan fiduciary net position	-	-	-	-	-
Plan fiduciary net position - beginning	-	-	-	-	-
Plan fiduciary net position - ending (b)	$ -	$ -	$ -	$ -	$ -
Plan net OPEB liability - ending (a) - (b)	$ 12,493,041	$ 12,970,501	$ 12,244,775	$ 10,896,484	$ 13,879,939
Plan fiduciary net position as a percentage of the total OPEB liability	0.00%	0.00%	0.00%	0.00%	0.00%
Covered-employee payroll	$ 45,397,022	$ 40,459,223	$ 37,310,945	$ 35,758,575	$ 33,827,843
Plan net OPEB liability as a percentage of covered employee payroll	27.52%	32.06%	32.82%	30.47%	41.03%

Note to Schedule: There are no assets accumulated in a trust that meets the criteria of GASB codification P22.101 or P52.101 to pay related benefits for the OPEB plan.

*Ten year historical information is not yet available

San Diego Metropolitan Transit System
Required Supplementary Information (Unaudited) (Continued)
Last Ten Fiscal Years*

SCHEDULE OF CHANGES IN THE TOTAL OPEB LIABILITY AND RELATED RATIOS (CONTINUED)
SDTI

Measurement period, year ended June 30:	2020	2019	2018	2017
Total OPEB Liability				
Service cost	$ 561,743	$ 442,873	$ 440,969	$ 493,375
Interest	412,287	415,912	389,043	336,668
Change of benefit terms	-	-	-	-
Difference between expected and actual experience	(351,313)	230,450	-	-
Change in assumptions	997,581	238,432	(168,207)	(956,245)
Benefit payments, including refunds of member contributions	(233,181)	(251,166)	(194,710)	(189,039)
Net change in total OPEB liability	1,387,117	1,076,501	467,095	(315,241)
Total OPEB liability - beginning	12,642,417	11,565,916	11,098,821	11,414,062
Total OPEB liability - ending (a)	$ 14,029,534	$ 12,642,417	$ 11,565,916	$ 11,098,821
OPEB fiduciary net position				
Contributions - employer	$ 233,181	$ 251,166	$ 194,710	$ 189,039
Benefit payments, including refunds of member contributions	(233,181)	(251,166)	(194,710)	(189,039)
Administrative expense	-	-	-	-
Net change in plan fiduciary net position	-	-	-	-
Plan fiduciary net position - beginning	-	-	-	-
Plan fiduciary net position - ending (b)	$ -	$ -	$ -	$ -
Plan net OPEB liability - ending (a) - (b)	$ 14,029,534	$ 12,642,417	$ 11,565,916	$ 11,098,821
Plan fiduciary net position as a percentage of the total OPEB liability	0.00%	0.00%	0.00%	0.00%
Covered-employee payroll	$ 32,204,645	$ 34,000,928	$ 31,280,070	$ 30,369,000
Plan net OPEB liability as a percentage of covered employee payroll	43.56%	37.18%	36.98%	36.55%

Note to Schedule: There are no assets accumulated in a trust that meets the criteria of GASB codification P22.101 or P52.101 to pay related benefits for the OPEB plan.

*Ten year historical information is not yet available

San Diego Metropolitan Transit System
Required Supplementary Information (Unaudited) (Continued)
Last Ten Fiscal Years*

SCHEDULE OF CHANGES IN THE TOTAL OPEB LIABILITY AND RELATED RATIOS
SDTC

Measurement period, year ended June 30:	2025	2024	2023	2022	2021
Total OPEB Liability					
Service Cost	$ 909,128	$ 881,770	$ 1,433,157	$ 2,246,032	$ 1,354,186
Interest	918,716	878,317	1,057,025	721,320	879,890
Changes of benefit terms	(6,874,672)	-	-	-	-
Difference between expected and actual experience	(1,011,016)	-	(1,968,176)	-	(1,192,985)
Changes in assumptions	(1,139,510)	(275,769)	(3,415,439)	(8,349,207)	(907,986)
Benefit payments, including refunds of member contributions	(770,753)	(1,138,087)	(1,127,242)	(977,243)	(1,052,058)
Net change in total OPEB liability	(7,968,107)	346,231	(4,020,675)	(6,359,098)	(918,953)
Total OPEB liability - beginning	21,294,511	20,948,280	24,968,955	31,328,053	32,247,006
Total OPEB liability - ending (a)	$ 13,326,404	$ 21,294,511	$ 20,948,280	$ 24,968,955	$ 31,328,053
OPEB fiduciary net position					
Contributions - employer	$ 770,753	$ 1,138,087	$ 1,127,242	$ 977,243	$ 1,052,058
Net investment income	-	-	-	-	-
Benefit payments, including refunds of member contributions	(770,753)	(1,138,087)	(1,127,242)	(977,243)	(1,052,058)
Administrative expense	-	-	-	-	-
Net change in plan fiduciary net position	-	-	-	-	-
Plan fiduciary net position - beginning	-	-	-	-	-
Plan fiduciary net position - ending (b)	$ -	$ -	$ -	$ -	$ -
Plan net OPEB liability - ending (a) - (b)	$ 13,326,404	$ 21,294,511	$ 20,948,280	$ 24,968,955	$ 31,328,053
Plan fiduciary net position as a percentage of the total OPEB liability	0.00%	0.00%	0.00%	0.00%	0.00%
Covered-employee payroll	$ 55,347,790	$ 52,310,897	$ 49,579,476	$ 46,831,537	$ 44,955,979
Plan net OPEB liability as a percentage of covered employee payroll	24.08%	40.71%	42.25%	53.32%	69.69%

Note to schedule: There are no assets accumulated in a trust that meets the criteria of GASB codification P22.101 or P52.101 to pay related benefits for the OPEB plan.

*Ten year historical information is not yet available

San Diego Metropolitan Transit System
Required Supplementary Information (Unaudited) (Continued)
Last Ten Fiscal Years*

SCHEDULE OF CHANGES IN THE TOTAL OPEB LIABILITY AND RELATED RATIOS (CONTINUED)
SDTC

Measurement period, year ended June 30:	2020	2019	2018	2017
Total OPEB Liability				
Service Cost	$ 1,317,943	$ 1,180,991	$ 1,176,005	$ 1,317,293
Interest	947,591	1,056,425	1,000,292	875,283
Changes of benefit terms	-	-	-	-
Difference between expected and actual experience	(424,383)	(2,478,929)	-	-
Changes in assumptions	2,156,592	1,027,981	(421,922)	(2,399,513)
Benefit payments, including refunds of member contributions	(1,022,172)	(1,035,246)	(957,045)	(929,170)
Net change in total OPEB liability	2,975,571	(248,778)	797,330	(1,136,107)
Total OPEB liability - beginning	29,271,435	29,520,213	28,722,883	29,858,990
Total OPEB liability - ending (a)	$ 32,247,006	$ 29,271,435	$ 29,520,213	$ 28,722,883
OPEB fiduciary net position				
Contributions - employer	$ 1,022,172	$ 1,035,246	$ 957,045	$ 929,170
Net investment income	-	-	-	-
Benefit payments, including refunds of member contributions	(1,022,172)	(1,035,246)	(957,045)	(929,170)
Administrative expense	-	-	-	-
Net change in plan fiduciary net position	-	-	-	-
Plan fiduciary net position - beginning	-	-	-	-
Plan fiduciary net position - ending (b)	$ -	$ -	$ -	$ -
Plan net OPEB liability - ending (a) - (b)	$ 32,247,006	$ 29,271,435	$ 29,520,213	$ 28,722,883
Plan fiduciary net position as a percentage of the total OPEB liability	0.00%	0.00%	0.00%	0.00%
Covered-employee payroll	$ 43,063,090	$ 41,720,578	$ 40,561,400	$ 39,380,000
Plan net OPEB liability as a percentage of covered employee payroll	74.88%	70.16%	72.78%	72.94%

Note to schedule: There are no assets accumulated in a trust that meets the criteria of GASB codification P22.101 or P52.101 to pay related benefits for the OPEB plan.

*Ten year historical information is not yet available

This page intentionally left blank.

SUPPLEMENTARY INFORMATION

Combining Schedule of Net Position

Combining Schedule of Revenues, Expenses, and Changes in Net Position

Combining Schedule of Cash Flows

Schedule of Revenues, Expenses, and Changes in Net Position - Budget and Actual:

- Combined Operations
- General Operations
- For Hire Vehicle Administration
- San Diego and Arizona Eastern Railway
- MTS - Contracted Services
- San Diego Transit Corporation
- San Diego Trolley, Inc.

This page intentionally left blank.

San Diego Metropolitan Transit System
Combining Schedule of Net Position
June 30, 2026

	General Operations	Contracted Services	SDTC	SDTI	Total
ASSETS					
Current assets:					
Cash, cash equivalents, and investments	$ 211,269,162	$ (19,320)	$ (239,686)	$ (179,370)	$ 210,830,786
Cash, cash equivalents, and investments restricted for capital support	195,626,804	-	-	-	195,626,804
Accounts and other receivables	16,263,022	137,500	417,272	471,254	17,289,048
Due from other governments	121,994,561	135,616	27,000	209,425	122,366,602
Leases receivable	2,401,474	-	-	-	2,401,474
Internal balances	58,834,118	4,762,225	(26,817,840)	(36,778,503)	-
Inventory	-	-	5,728,276	39,962,830	45,691,106
Prepaid items and other current assets	2,060,759	5,000	2,430,795	1,603,447	6,100,001
Total current assets	608,449,900	5,021,021	(18,454,183)	5,289,083	600,305,821
Noncurrent assets:					
Lease receivable, due in more than one year	67,296,399	-	-	-	67,296,399
Capital assets, net	116,314,253	254,321,401	240,794,293	2,486,873,777	3,098,303,724
Total noncurrent assets	183,610,652	254,321,401	240,794,293	2,486,873,777	3,165,600,123
Total assets	792,060,552	259,342,422	222,340,110	2,492,162,860	3,765,905,944
DEFERRED OUTFLOWS OF RESOURCES					
Pension-related deferred outflows of resources	6,600,430	-	19,519,107	11,895,861	38,015,398
OPEB-related deferred outflows of resources	749,898	-	1,030,691	2,513,101	4,293,690
Total deferred outflows of resources	7,350,328	-	20,549,798	14,408,962	42,309,088
LIABILITIES					
Current liabilities:					
Accounts payable	24,888,835	12,637,140	1,693,103	6,715,821	45,934,899
Due to other governments	1,920,939	94,538	92,387	634,355	2,742,219
Unearned revenue	214,679,236	2,107,850	-	1,219,261	218,006,347
Accrued expenses	785,030	-	2,583,200	1,315,561	4,683,791
Retentions payable	1,794,424	3,022	1,087	234,674	2,033,207
Retentions payable from restricted assets	308,589	-	-	-	308,589
Due within one year:					
Aggregate total OPEB liability	145,095	-	442,853	299,075	887,023
Lease liability	-	178,636	71,584	37,751	287,971
Subscription liability	1,139,262	-	-	-	1,139,262
Compensated absences payable	1,813,442	-	5,318,762	3,966,010	11,098,214
Accrued damage, injury, and employee claims	899,593	-	8,301,143	3,286,471	12,487,207
Total current liabilities	248,374,445	15,021,186	18,504,119	17,708,979	299,608,729
Noncurrent liabilities:					
Due in more than one year:					
Lease liability	-	8,336,250	178,586	1,747,925	10,262,761
Subscription liability	2,811,136	-	-	-	2,811,136
Compensated absences payable	273,023	-	2,139,646	-	2,412,669
Accrued damage, injury, and employee claims	984,643	-	14,131,465	5,392,358	20,508,466
Aggregate net pension liability	15,962,022	-	144,131,425	34,965,969	195,059,416
Aggregate total OPEB liability	6,428,083	-	12,883,551	12,193,966	31,505,600
Total noncurrent liabilities	26,458,907	8,336,250	173,464,673	54,300,218	262,560,048
Total liabilities	274,833,352	23,357,436	191,968,792	72,009,197	562,168,777
DEFERRED INFLOWS OF RESOURCES					
Pension-related deferred inflows of resources	2,327,363	-	1,424,305	5,914,161	9,665,829
OPEB-related deferred inflows of resources	3,729,506	-	10,521,860	5,583,000	19,834,366
Lease-related deferred inflows of resources	68,509,215	-	-	-	68,509,215
Total deferred inflows of resources	74,566,084	-	11,946,165	11,497,161	98,009,410
NET POSITION					
Net investment in capital assets	110,569,431	245,803,493	240,543,036	2,484,853,427	3,081,769,387
Unrestricted (deficit)	339,442,013	(9,818,507)	(201,568,085)	(61,787,963)	66,267,458
Total net position	$ 450,011,444	$ 235,984,986	$ 38,974,951	$ 2,423,065,464	$ 3,148,036,845

San Diego Metropolitan Transit System
Combining Schedule of Revenues, Expenses, and Changes in Net Position
For the Year Ended June 30, 2026

	General Operations	Contracted Services	SDTC
Operating revenues:			
Passenger revenue	$ -	$ 22,433,924	$ 17,940,814
Advertising	3,966,738	-	-
Miscellaneous	23,750,961	-	-
Total operating revenues	27,717,699	22,433,924	17,940,814
Operating expenses:			
Personnel costs	37,042,932	1,076,531	87,744,002
Outside services	29,529,143	120,144,901	2,785,450
Transit operations funding	196,035,192	-	-
Materials and supplies	400,405	133,380	8,572,452
Energy costs	348,606	9,359,730	7,413,657
Risk management	503,892	15,000	13,627,224
Miscellaneous	(33,321,935)	3,637,880	8,826,390
Depreciation and amortization	4,193,133	28,721,037	24,050,116
Total operating expenses	234,731,368	163,088,459	153,019,291
Operating income (loss)	(207,013,669)	(140,654,535)	(135,078,477)
Noncapital subsidies:			
Federal revenue	79,493,097	16,972,720	24,024,849
Transportation Development Act	111,570,626	72,212,368	1,473,683
State Transit Assistance	17,079,262	4,629,909	10,832,768
State revenue - Other	16,695,068	6,249,647	1,649,425
TransNet funds	83,835,010	10,964,324	45,270,302
Other local subsidies	3,999,885	1,258,537	2,741,348
Total noncapital subsidies	312,672,948	112,287,505	85,992,375
Operating income (loss) and noncapital subsidies	105,659,279	(28,367,030)	(49,086,102)
Nonoperating revenues (expenses):			
Federal revenue - capital	13,621,302	-	-
Transportation Development Act (TDA) funds - capital	23,160,693	-	-
State Transit Assistance (STA) funds - capital	14,100,156	-	-
STA State of Good Repair - capital	2,623,015	-	-
State revenue - other capital	43,987,148	-	-
TransNet funds - capital	2,589,622	-	-
Capital contributions, net	(103,323,173)	21,369,587	45,769,506
Investment earnings	10,123,270	-	-
Interest expense	(107,525)	(167,317)	(3,802)
Gain (loss) on disposal of assets	(168,538)	-	(37,067)
Transfers	(112,287,505)	-	-
Other non-operating revenue	2,177,329	-	-
Other non-operating expenses	-	-	-
Total nonoperating revenues (expenses)	(103,504,206)	21,202,270	45,728,637
Changes in net position	2,155,073	(7,164,760)	(3,357,465)
Net position:			
Beginning of year	447,856,371	243,149,746	42,332,416
End of year	$ 450,011,444	$ 235,984,986	$ 38,974,951

San Diego Metropolitan Transit System
Combining Schedule of Revenues, Expenses, and Changes in Net Position (Continued)
For the Year Ended June 30, 2026

	SDTI	Eliminations	Total
Operating revenues:			
Passenger revenue	$ 29,969,905	$ -	$ 70,344,643
Advertising	-	-	3,966,738
Miscellaneous	719,657	-	24,470,618
Total operating revenues	30,689,562	-	98,781,999
Operating expenses:			
Personnel costs	62,730,028	-	188,593,493
Outside services	23,730,131	-	176,189,625
Transit operations funding	-	(195,306,639)	728,553
Materials and supplies	12,791,599	-	21,897,836
Energy costs	32,261,841	-	49,383,834
Risk management	6,367,960	-	20,514,076
Miscellaneous	31,780,891	-	10,923,226
Depreciation and amortization	143,060,925	-	200,025,211
Total operating expenses	312,723,375	(195,306,639)	668,255,854
Operating income (loss)	(282,033,813)	195,306,639	(569,473,855)
Noncapital subsidies:			
Federal revenue	38,344,067	(79,341,636)	79,493,097
Transportation Development Act	36,299,891	(109,985,942)	111,570,626
State Transit Assistance	1,585,618	(17,048,295)	17,079,262
State revenue - Other	5,942,781	(13,841,853)	16,695,068
TransNet funds	27,141,907	(83,376,533)	83,835,010
Other local subsidies	-	(3,999,885)	3,999,885
Total noncapital subsidies	109,314,264	(307,594,144)	312,672,948
Operating income (loss) and noncapital subsidies	(172,719,549)	(112,287,505)	(256,800,907)
Nonoperating revenues (expenses):			
Federal revenue - capital	-	-	13,621,302
Transportation Development Act (TDA) funds - capital	-	-	23,160,693
State Transit Assistance (STA) funds - capital	-	-	14,100,156
STA State of Good Repair - capital	-	-	2,623,015
State revenue - other capital	-	-	43,987,148
TransNet funds - capital	-	-	2,589,622
Capital contributions, net	49,112,998	-	12,928,918
Investment earnings	-	-	10,123,270
Interest expense	(28,760)	-	(307,404)
Gain (loss) on disposal of assets	(654,786)	-	(860,391)
Transfers	-	112,287,505	-
Other non-operating revenue	-	-	2,177,329
Other non-operating expenses	(147,141)	-	(147,141)
Total nonoperating revenues (expenses)	48,282,311	112,287,505	123,996,517
Changes in net position	(124,437,238)	-	(132,804,390)
Net position:			
Beginning of year	2,547,502,702	-	3,280,841,235
End of year	$ 2,423,065,464	$ -	$ 3,148,036,845

San Diego Metropolitan Transit System
Combining Schedule of Cash Flows
For the Year Ended June 30, 2026

	General Operations	Contracted Services	SDTC	SDTI	Total
Cash flows from operating activities:					
Receipts from customers and users	$ 30,417,270	$ 22,694,528	$ 18,153,868	$ 32,574,334	$ 103,840,000
Payments to suppliers	5,264,751	(131,225,616)	(33,677,203)	(106,458,200)	(266,096,268)
Payments to employees	(35,925,048)	(1,076,531)	(97,746,873)	(62,833,568)	(197,582,020)
Payments for damage and injury	(506,072)	-	(7,614,247)	(466,076)	(8,586,395)
Net cash provided by (used in) operating activities	(749,099)	(109,607,619)	(120,884,455)	(137,183,510)	(368,424,683)
Cash flows from noncapital financing activities:					
Public support funds received	36,804,864	112,174,372	121,637,373	143,487,064	414,103,673
Net cash provided by noncapital financing activities	36,804,864	112,174,372	121,637,373	143,487,064	414,103,673
Cash flows from capital and related financing activities:					
Property acquisition	(113,393,626)	(342,524)	(466,493)	(5,758,543)	(119,961,186)
Proceeds from disposal of assets	56,899	-	57,748	-	114,647
Net cash provided by (used in) capital and related financing activities	(113,336,727)	(342,524)	(408,745)	(5,758,543)	(119,846,539)
Cash flows from investing activities:					
Interest received on investments	8,962,516	-	-	-	8,962,516
Net cash provided by investing activities	8,962,516	-	-	-	8,962,516
Net increase (decrease) in cash and cash equivalents	(68,318,446)	2,224,229	344,173	545,011	(65,205,033)
Cash, cash equivalents, and investments:					
Beginning of year	475,214,412	(2,243,549)	(583,859)	(724,381)	471,662,623
End of year	$ 406,895,966	$ (19,320)	$ (239,686)	$ (179,370)	$ 406,457,590
Cash, cash equivalents, and investments:					
Cash, cash equivalents, and investments	$ 211,269,162	$ (19,320)	$ (239,686)	$ (179,370)	$ 210,830,786
Cash restricted for capital support	195,626,804	-	-	-	195,626,804
Total cash, cash equivalents, and investments	$ 406,895,966	$ (19,320)	$ (239,686)	$ (179,370)	$ 406,457,590

San Diego Metropolitan Transit System
Combining Schedule of Cash Flows (Continued)
For the Year Ended June 30, 2026

	General Operations	Contracted Services	SDTC	SDTI	Total
Reconciliation of Operating (Loss) to Net Cash (Used In) Operating Activities					
Operating (loss):	$ (11,707,030)	$ (140,654,535)	$ (135,078,477)	$ (282,033,813)	$ (569,473,855)
Adjustments to reconcile operating (loss) to net cash (used in) operating activities:					
Depreciation and amortization	4,193,133	28,721,037	24,050,116	143,060,925	200,025,211
(Increase) decrease in:					
Accounts and other receivables	1,614,085	(22,213)	197,652	1,956,576	3,746,100
Due from other governments	328,745	-	49,389	-	378,134
Inventory	-	-	(868,324)	(1,637,363)	(2,505,687)
Prepaid expenses and other current assets	(160,825)	15,000	(1,202,635)	(777,869)	(2,126,329)
Increase (decrease) in:					
Accounts payable	3,351,791	2,044,015	(202,704)	1,899,285	7,092,387
Due to other governments	320,623	6,260	10,593	400,828	738,304
Accrued expenses	153,031	-	61,117	102,683	316,831
Unearned revenue	129,180	282,817	-	1,219,261	1,631,258
Aggregate net pension liability	178,334	-	(4,246,091)	(1,850,156)	(5,917,913)
Aggregate total OPEB liability	165,117	-	(7,811,630)	133,667	(7,512,846)
Compensated absences payable	128,328	-	62,759	127,596	318,683
Accrued damage, injury and employee claims	556,389	-	4,093,780	214,870	4,865,039
Total adjustments	10,957,931	31,046,916	14,194,022	144,850,303	201,049,172
Net cash (used in) operating activities	$ (749,099)	$ (109,607,619)	$ (120,884,455)	$ (137,183,510)	$ (368,424,683)

San Diego Metropolitan Transit System
Schedule of Revenues, Expenses, and Changes in Net Position – Budget and Actual
Combined Operations
For the Year Ended June 30, 2026

	Budgeted Amounts		Actual Amounts			
	Original	Final	Actuals per Statement of Revenues, Expenses, and Changes in Net Position Amounts	Budget Basis Adjustments	Actuals on Budget Basis	Variance with Final Budget Positive (Negative)
Operating revenues:						
Passenger revenue	$ 89,162,798	$ 80,821,605	$ 70,344,643	$ 10,948,611	$ 81,293,254	$ 471,649
Advertising	3,953,909	4,013,008	3,966,738	46,391	4,013,129	121
Miscellaneous operating revenues	21,400,832	21,784,197	24,470,618	(107,180)	24,363,438	2,579,241
Total operating revenues	114,517,539	106,618,810	98,781,999	10,887,822	109,669,821	3,051,011
Operating expenses:						
Personnel costs	207,402,270	203,389,899	188,593,493	13,586,719	202,180,212	1,209,687
Outside services	170,593,359	172,238,969	176,189,625	(8,340,309)	167,849,316	4,389,653
Transit operations funding	790,564	854,250	728,553	-	728,553	125,697
Materials and supplies	22,061,491	21,420,124	21,897,836	(256,550)	21,641,286	(221,162)
Energy costs	49,919,700	49,570,975	49,383,834	-	49,383,834	187,141
Risk management	12,616,550	13,599,339	20,514,076	(4,239,931)	16,274,145	(2,674,806)
Miscellaneous operating expenses	9,694,951	9,991,356	10,923,226	(535,856)	10,387,370	(396,014)
Depreciation and amortization	-	-	200,025,211	(200,025,211)	-	-
Total operating expenses	473,078,885	471,064,912	668,255,854	(199,811,138)	468,444,716	2,620,196
Operating income (loss)	(358,561,346)	(364,446,102)	(569,473,855)	210,698,960	(358,774,895)	5,671,207
Noncapital subsidies:						
Federal revenue	79,067,133	79,320,613	79,493,097	(43,705)	79,449,392	128,779
Transportation Development Act	100,538,352	106,728,725	111,570,626	(4,269,190)	107,301,436	572,711
State Transit Assistance	11,300,000	9,337,501	17,079,262	(7,730,513)	9,348,749	11,248
State revenue - Other	20,918,631	13,534,887	16,695,068	(3,933,150)	12,761,918	(772,969)
TransNet F unds	74,958,329	76,743,441	83,835,010	(5,500,000)	78,335,010	1,591,569
Other local subsidies	3,120,000	3,120,000	3,999,885	(138,011)	3,861,874	741,874
Total noncapital subsidies	289,902,445	288,785,167	312,672,948	(21,614,569)	291,058,379	2,273,212
Operating income (loss) and noncapital subsidies	(68,658,901)	(75,660,935)	(256,800,907)	189,084,391	(67,716,516)	7,944,419
Nonoperating revenues (expenses):						
Federal revenue - capital	-	-	13,621,302	(13,621,302)	-	-
Transportation Development Act - capital	-	-	23,160,693	(23,160,693)	-	-
State Transit Assistance (STA) funds - capital	-	-	14,100,156	(14,100,156)	-	-
STA State of Good Repair - capital	-	-	2,623,015	(2,623,015)	-	-
State revenue - other capital	-	-	43,987,148	(43,987,148)	-	-
TransNet funds - capital	-	-	2,589,622	(2,589,622)	-	-
Capital contributions, net	-	-	12,928,918	(12,928,918)	-	-
Investment earnings	6,522,825	7,588,479	10,123,270	(1,668,580)	8,454,690	866,211
Interest expense	-	-	(307,404)	307,404	-	-
Gain (loss) on disposal of assets	50,000	91,000	(860,391)	975,038	114,647	23,647
Other non-operating revenue	-	-	2,177,329	(2,177,329)	-	-
Other non-operating expenses	-	-	(147,141)	147,141	-	-
Total nonoperating revenues (expenses)	6,572,825	7,679,479	123,996,517	(115,427,180)	8,569,337	889,858
Reserve revenue	62,086,076	67,981,456	-	64,296,040	64,296,040	(3,685,416)
Change in net position	$ -	$ -	(132,804,390)	$ 137,953,251	$ 5,148,861	$ 5,148,861
Net Position:						
Beginning of year			3,280,841,235			
End of year			$3,148,036,845			

San Diego Metropolitan Transit System
Schedule of Revenues, Expenses, and Changes in Net Position – Budget and Actual
General Operations
For the Year Ended June 30, 2026

	Budgeted Amounts		Actual Amounts			
	Original	Final	Actuals per Statement of Revenues, Expenses, and Changes in Net Position Amounts	Budget Basis Adjustments	Actuals on Budget Basis	Variance with Final Budget Positive (Negative)
Operating revenues:						
Advertising	$ 3,953,909	$ 4,013,008	$ 3,966,738	$ 46,391	$ 4,013,129	$ 121
Miscellaneous operating revenues	19,370,449	19,959,390	22,536,161	(110,021)	22,426,140	2,466,750
Total operating revenues	23,324,358	23,972,398	26,502,899	(63,630)	26,439,269	2,466,871
Operating expenses:						
Personnel costs	36,485,085	36,330,598	36,359,257	(485,820)	35,873,437	457,161
Outside services	32,457,467	32,248,441	28,985,228	1,301,322	30,286,550	1,961,891
Transit operations funding	790,564	854,250	196,035,192	(195,306,639)	728,553	125,697
Materials and supplies	53,819	84,210	400,178	(206,693)	193,485	(109,275)
Energy costs	361,945	342,600	343,723	-	343,723	(1,123)
Risk management	1,161,180	1,033,106	411,805	557,402	969,207	63,899
Miscellaneous operating expenses	(36,600,010)	(34,872,245)	(33,445,074)	(1,018,040)	(34,463,114)	(409,131)
Depreciation and amortization	-	-	4,179,077	(4,179,077)	-	-
Total operating expenses	34,710,050	36,020,960	233,269,386	(199,337,545)	33,931,841	2,089,119
Operating income (loss)	(11,385,692)	(12,048,562)	(206,766,487)	199,273,915	(7,492,572)	4,555,990
Noncapital subsidies:						
Federal revenue	-	-	79,493,097	(79,350,492)	142,605	142,605
Transportation Development Act	790,564	854,250	111,570,626	(110,716,376)	854,250	-
State Transit Assistance	-	-	17,079,262	(17,079,262)	-	-
State revenue - Other	3,500,000	2,956,943	16,695,068	(14,020,556)	2,674,512	(282,431)
TransNet Funds	522,303	588,890	83,835,010	(83,376,533)	458,477	(130,413)
Other local subsidies	-	-	3,999,885	(3,999,885)	-	-
Total noncapital subsidies	4,812,867	4,400,083	312,672,948	(308,543,104)	4,129,844	(270,239)
Operating income (loss) and noncapital subsidies	(6,572,825)	(7,648,479)	105,906,461	(109,269,189)	(3,362,728)	4,285,751
Nonoperating revenues (expenses):						
Federal revenue - capital	-	-	13,621,302	(13,621,302)	-	-
Transportation Development Act - capital	-	-	23,160,693	(23,160,693)	-	-
State Transit Assistance (STA) funds - capital	-	-	14,100,156	(14,100,156)	-	-
STA State of Good Repair - capital	-	-	2,623,015	(2,623,015)	-	-
State revenue - other capital	-	-	43,987,148	(43,987,148)	-	-
TransNet funds - capital	-	-	2,589,622	(2,589,622)	-	-
Capital contributions, net	-	-	(103,323,173)	103,323,173	-	-
Investment earnings	6,522,825	7,588,479	10,088,535	(1,633,845)	8,454,690	866,211
Interest expense	-	-	(107,525)	107,525	-	-
Gain (loss) on disposal of assets	50,000	60,000	(168,538)	225,437	56,899	(3,101)
Transfers	-	-	(112,287,505)	112,287,505	-	-
Other nonoperating revenue	-	-	2,177,329	(2,177,329)	-	-
Total nonoperating revenues (expenses)	6,572,825	7,648,479	(103,538,941)	112,050,530	8,511,589	863,110
Change in net position	$ -	$ -	2,367,520	$ 2,781,341	$ 5,148,861	$ 5,148,861
Net position:						
Beginning of year			428,658,862			
End of year			$ 431,026,382			

San Diego Metropolitan Transit System
Schedule of Revenues, Expenses, and Changes in Net Position – Budget and Actual
For Hire Vehicle Administration
For the Year Ended June 30, 2026

	Budgeted Amounts		Actual Amounts			
	Original	Final	Actuals per Statement of Revenues, Expenses, and Changes in Net Position Amounts	Budget Basis Adjustments	Actuals on Budget Basis	Variance with Final Budget Positive (Negative)
Operating revenues:						
Miscellaneous operating revenues	$ 771,770	$ 827,345	$ 870,728	$ -	$ 870,728	$ 43,383
Total operating revenues	771,770	827,345	870,728	-	870,728	43,383
Operating expenses:						
Personnel costs	684,917	702,150	681,405	-	681,405	20,745
Outside services	120,840	230,000	259,286	-	259,286	(29,286)
Materials and supplies	500	500	227	-	227	273
Energy costs	7,000	7,000	4,883	-	4,883	2,117
Risk management	11,000	41,200	41,197	-	41,197	3
Miscellaneous operating expenses	109,736	101,301	99,537	-	99,537	1,764
Total operating expenses	933,993	1,082,151	1,086,535	-	1,086,535	(4,384)
Operating income (loss)	(162,223)	(254,806)	(215,807)	-	(215,807)	38,999
Reserve revenue	162,223	254,806	-	215,807	215,807	(38,999)
Change in net position	$ -	$ -	(215,807)	$ 215,807	$ -	$ -
Net Position:						
Beginning of year			670,907			
End of year			$ 455,100			

San Diego Metropolitan Transit System
Schedule of Revenues, Expenses, and Changes in Net Position – Budget and Actual
San Diego and Arizona Eastern Railway
For the Year Ended June 30, 2026

	Budgeted Amounts		Actual Amounts			
	Original	Final	Actuals per Statement of Revenues, Expenses, and Changes in Net Position Amounts	Budget Basis Adjustments	Actuals on Budget Basis	Variance with Final Budget Positive (Negative)
Operating revenues:						
Miscellaneous operating revenues	$ 242,211	$ 327,000	$ 344,072	$ 2,841	$ 346,913	$ 19,913
Total operating revenues	242,211	327,000	344,072	2,841	346,913	19,913
Operating expenses:						
Personnel costs	5,700	2,400	2,270	-	2,270	130
Outside services	35,000	317,000	284,629	-	284,629	32,371
Risk management	101,467	101,467	50,890	-	50,890	50,577
Miscellaneous operating expenses	27,050	25,000	23,602	-	23,602	1,398
Depreciation and amortization	-	-	14,056	(14,056)	-	-
Total operating expenses	169,217	445,867	375,447	(14,056)	361,391	84,476
Operating income (loss)	72,994	(118,867)	(31,375)	16,897	(14,478)	104,389
Nonoperating revenues:						
Investment earnings	-	-	34,735	(34,735)	-	-
Total nonoperating revenues	-	-	34,735	(34,735)	-	-
Reserve revenue	(72,994)	118,867	-	14,478	14,478	(104,389)
Change in net position	$ -	$ -	3,360	$ (3,360)	$ -	$ -
Net Position:						
Beginning of year			18,526,602			
End of year			$ 18,529,962			

San Diego Metropolitan Transit System
Schedule of Revenues, Expenses, and Changes in Net Position – Budget and Actual
MTS – Contracted Services
For the Year Ended June 30, 2026

	Budgeted Amounts		Actual Amounts			
	Original	Final	Actuals per Statement of Revenues, Expenses, and Changes in Net Position Amounts	Budget Basis Adjustments	Actuals on Budget Basis	Variance with Final Budget Positive (Negative)
Operating revenues:						
Passenger revenue	$ 26,466,022	$ 27,140,367	$ 22,433,924	$ 4,467,228	$ 26,901,152	$ (239,215)
Total operating revenues	26,466,022	27,140,367	22,433,924	4,467,228	26,901,152	(239,215)
Operating expenses:						
Personnel costs	956,476	957,737	1,076,531	-	1,076,531	(118,794)
Outside services	119,295,313	117,189,955	120,144,901	(3,612,207)	116,532,694	657,261
Materials and supplies	100,412	128,405	133,380	-	133,380	(4,975)
Energy costs	10,264,191	10,180,658	9,359,730	-	9,359,730	820,928
Risk management	15,050	15,000	15,000	-	15,000	-
Miscellaneous operating expenses	3,794,576	3,982,026	3,637,880	342,524	3,980,404	1,622
Depreciation and amortization	-	-	28,721,037	(28,721,037)	-	-
Total operating expenses	134,426,018	132,453,781	163,088,459	(31,990,720)	131,097,739	1,356,042
Operating income (loss)	(107,959,996)	(105,313,414)	(140,654,535)	36,457,948	(104,196,587)	1,116,827
Noncapital subsidies:						
Federal revenue	17,017,133	16,994,613	16,972,720	-	16,972,720	(21,893)
Transportation Development Act	71,688,932	70,813,446	72,212,368	(1,282,998)	70,929,370	115,924
State Transit Assistance	-	-	4,629,909	(4,629,909)	-	-
State revenue - Other	9,076,790	6,384,578	6,249,647	-	6,249,647	(134,931)
TransNet Funds	9,057,141	10,000,777	10,964,324	(2,040,000)	8,924,324	(1,076,453)
Other local subsidies	1,120,000	1,120,000	1,258,537	(138,011)	1,120,526	526
Total noncapital subsidies	107,959,996	105,313,414	112,287,505	(8,090,918)	104,196,587	(1,116,827)
Operating income (loss) and noncapital subsidies	-	-	(28,367,030)	28,367,030	-	-
Nonoperating revenues (expenses):						
Capital contributions, net	-	-	21,369,587	(21,369,587)	-	-
Interest expense	-	-	(167,317)	167,317	-	-
Total nonoperating revenues (expenses)	-	-	21,202,270	(21,202,270)	-	-
Change in net position	$ -	$ -	(7,164,760)	$ 7,164,760	$ -	$ -
Net Position:						
Beginning of year			243,149,746			
End of year			$ 235,984,986			

San Diego Metropolitan Transit System
Schedule of Revenues, Expenses, and Changes in Net Position – Budget and Actual
San Diego Transit Corporation (SDTC)
For the Year Ended June 30, 2026

	Budgeted Amounts		Actual Amounts			
	Original	Final	Actuals per Statement of Revenues, Expenses, and Changes in Net Position Amounts	Budget Basis Adjustments	Actuals on Budget Basis	Variance with Final Budget Positive (Negative)
Operating revenues:						
Passenger revenue	$ 20,710,953	$ 20,779,433	$ 17,940,814	$ 2,835,765	$ 20,776,579	$ (2,854)
Miscellaneous operating revenues	50,000	-	-	-	-	-
Total operating revenues	20,760,953	20,779,433	17,940,814	2,835,765	20,776,579	(2,854)
Operating expenses:						
Personnel costs	103,617,914	100,815,926	87,744,002	12,504,366	100,248,368	567,558
Outside services	2,565,199	2,893,766	2,785,450	(368,537)	2,416,913	476,853
Materials and supplies	7,705,304	8,033,124	8,572,452	-	8,572,452	(539,328)
Energy costs	8,525,238	7,914,010	7,413,657	-	7,413,657	500,353
Risk management	4,335,176	6,157,975	13,627,224	(4,603,183)	9,024,041	(2,866,066)
Miscellaneous operating expenses	9,647,559	8,950,325	8,826,390	71,532	8,897,922	52,403
Depreciation and amortization	-	-	24,050,116	(24,050,116)	-	-
Total operating expenses	136,396,390	134,765,126	153,019,291	(16,445,938)	136,573,353	(1,808,227)
Operating income (loss)	(115,635,437)	(113,985,693)	(135,078,477)	19,281,703	(115,796,774)	(1,811,081)
Noncapital subsidies:						
Federal revenue	21,500,000	23,990,000	24,024,849	(34,849)	23,990,000	-
Transportation Development Act	2,840,813	731,461	1,473,683	(285,434)	1,188,249	456,788
State Transit Assistance	11,300,000	9,337,501	10,832,768	(1,484,019)	9,348,749	11,248
STA State of Good Repair	-	-	-	-	-	-
State revenue - Other	4,771,873	1,649,425	1,649,425	-	1,649,425	-
TransNet Funds	41,225,904	41,638,523	45,270,302	(1,400,000)	43,870,302	2,231,779
Other local subsidies	2,000,000	2,000,000	2,741,348	-	2,741,348	741,348
Total noncapital subsidies	83,638,590	79,346,910	85,992,375	(3,204,302)	82,788,073	3,441,163
Operating income (loss) and noncapital subsidies	(31,996,847)	(34,638,783)	(49,086,102)	16,077,401	(33,008,701)	1,630,082
Nonoperating revenues (expenses):						
Capital contributions, net	-	-	45,769,506	(45,769,506)	-	-
Interest expense	-	-	(3,802)	3,802	-	-
Gain (loss) on disposal of assets	-	31,000	(37,067)	94,815	57,748	26,748
Total nonoperating revenues (expenses)	-	31,000	45,728,637	(45,670,889)	57,748	26,748
Reserve revenue	31,996,847	34,607,783	-	32,950,953	32,950,953	(1,656,830)
Change in net position	$ -	$ -	(3,357,465)	$ 3,357,465	$ -	$ -
Net Position:						
Beginning of year			42,332,416			
End of year			$ 38,974,951			

San Diego Metropolitan Transit System
Schedule of Revenues, Expenses, and Changes in Net Position – Budget and Actual
San Diego Trolley, Inc. (SDTI)
For the Year Ended June 30, 2026

	Budgeted Amounts		Actual Amounts			
	Original	Final	Actuals per Statement of Revenues, Expenses, and Changes in Net Position Amounts	Budget Basis Adjustments	Actuals on Budget Basis	Variance with Final Budget Positive (Negative)
Operating revenues:						
Passenger revenue	$ 41,985,823	$ 32,901,805	$ 29,969,905	$ 3,645,618	$ 33,615,523	$ 713,718
Miscellaneous operating revenues	966,402	670,462	719,657	-	719,657	49,195
Total operating revenues	42,952,225	33,572,267	30,689,562	3,645,618	34,335,180	762,913
Operating expenses:						
Personnel costs	65,652,178	64,581,088	62,730,028	1,568,173	64,298,201	282,887
Outside services	16,119,540	19,359,807	23,730,131	(5,660,887)	18,069,244	1,290,563
Materials and supplies	14,201,456	13,173,885	12,791,599	(49,857)	12,741,742	432,143
Energy costs	30,761,326	31,126,707	32,261,841	-	32,261,841	(1,135,134)
Risk management	6,992,677	6,250,591	6,367,960	(194,150)	6,173,810	76,781
Miscellaneous operating expenses	32,716,040	31,804,949	31,780,891	68,128	31,849,019	(44,070)
Depreciation and amortization	-	-	143,060,925	(143,060,925)	-	-
Total operating expenses	166,443,217	166,297,027	312,723,375	(147,329,518)	165,393,857	903,170
Operating income (loss)	(123,490,992)	(132,724,760)	(282,033,813)	150,975,136	(131,058,677)	1,666,083
Noncapital subsidies:						
Federal revenue	40,550,000	38,336,000	38,344,067	-	38,344,067	8,067
Transportation Development Act	25,218,043	34,329,568	36,299,891	(1,970,324)	34,329,567	(1)
State Transit Assistance	-	-	1,585,618	(1,585,618)	-	-
State revenue - Other	3,569,968	2,543,941	5,942,781	(3,754,447)	2,188,334	(355,607)
TransNet Funds	24,152,981	24,515,251	27,141,907	(2,060,000)	25,081,907	566,656
Total noncapital subsidies	93,490,992	99,724,760	109,314,264	(9,370,389)	99,943,875	219,115
Operating income (loss) and noncapital subsidies	(30,000,000)	(33,000,000)	(172,719,549)	141,604,747	(31,114,802)	1,885,198
Nonoperating revenues (expenses):						
Capital contributions, net	-	-	49,112,998	(49,112,998)	-	-
Interest expense	-	-	(28,760)	28,760	-	-
Gain (loss) on disposal of assets	-	-	(654,786)	654,786	-	-
Other non-operating expenses	-	-	(147,141)	147,141	-	-
Total nonoperating revenues (expenses)	-	-	48,282,311	(48,282,311)	-	-
Reserve revenue	30,000,000	33,000,000	-	31,114,802	31,114,802	(1,885,198)
Change in net position	$ -	$ -	(124,437,238)	$ 124,437,238	$ -	$ -
Net Position:						
Beginning of year			2,547,502,702			
End of year			$ 2,423,065,464			

STATISTICAL SECTION
(Unaudited)

Included in this section of the Metropolitan Transit System annual comprehensive financial report is detailed information to assist in analysis and understanding of the information presented in the financial statements, notes and required supplementary information.

Contents

Financial Trends
These schedules contain trend information to help the reader understand how MTS's financial position has changed over time.

Revenue Capacity
These schedules contain detailed information about the fare structures and revenue generated from transit operations provided by MTS.

Debt Capacity
This schedule presents information to help the reader assess the affordability of MTS's current levels of outstanding debt and MTS's ability to issue debt in the future.

Demographic and Economic Information
These schedules provide service and infrastructure data to help the reader understand how the information in MTS's financial report relates to the services MTS provides.

Operating Information
These schedules provide service and infrastructure data to help the reader understand how the information in MTS's financial report relates to the services MTS provides.

This page intentionally left blank.

FINANCIAL TRENDS

San Diego Metropolitan Transit System
Net Position by Component (in 000's)
Last Ten Fiscal Years

	2026	2025	2024	2023	2022
Business-type activities:					
Net investment in capital assets	$ 3,081,769	$ 3,148,235	$ 3,266,970	$ 3,351,318	$ 3,473,998
Restricted	-	-	-	-	-
Unrestricted (deficit)	66,267	132,606	112,222	107,538	9,192
Total business-type activities net position	$ 3,148,037	$ 3,280,841	$ 3,379,192	$ 3,458,856	$ 3,483,190
Primary government:					
Net investment in capital assets	$ 3,081,769	$ 3,148,235	$ 3,266,970	$ 3,351,318	$ 3,473,998
Restricted	-	-	-	-	-
Unrestricted (deficit)	66,267	132,606	112,222	107,538	9,192
Total primary government net position	$ 3,148,037	$ 3,280,841	$ 3,379,192	$ 3,458,856	$ 3,483,190

Source: Audited Financial Statements.

San Diego Metropolitan Transit System
Net Position by Component (in 000's)(Continued)
Last Ten Fiscal Years

	2021	2020	2019	2018	2017
Business-type activities:					
Net investment in capital assets	$ 1,965,674	$ 1,874,320	$ 1,822,922	$ 1,785,808	$ 1,739,360
Restricted	-	218	212	4,545	4,440
Unrestricted (deficit)	(46,746)	(12,024)	(53,159)	(55,407)	(46,663)
Total business-type activities net position	$ 1,918,928	$ 1,862,514	$ 1,769,975	$ 1,734,946	$ 1,697,137
Primary government:					
Net investment in capital assets	$ 1,965,674	$ 1,874,320	$ 1,822,922	$ 1,785,808	$ 1,739,360
Restricted	-	218	212	4,545	4,440
Unrestricted (deficit)	(46,746)	(12,024)	(53,159)	(55,407)	(46,663)
Total primary government net position	$ 1,918,928	$ 1,862,514	$ 1,769,975	$ 1,734,946	$ 1,697,137

San Diego Metropolitan Transit System
Changes in Net Position (in 000's)
Last Ten Fiscal Years

	2026	2025	2024	2023	2022
Operating revenues:					
Passenger revenue	$ 70,345	$ 65,881	$ 61,222	$ 67,481	$ 56,077
Advertising	3,967	4,046	3,451	3,501	1,946
Miscellaneous	24,471	22,482	18,541	16,061	19,412
Total operating revenues	98,783	92,409	83,214	87,043	77,435
Operating expenses:					
Personnel costs	188,593	201,570	189,650	173,773	143,950
Outside services	176,190	167,138	153,359	124,333	117,535
Transit operations funding	729	686	518	659	616
Materials and supplies	21,898	18,440	19,744	17,295	14,779
Energy costs	49,384	44,218	43,126	51,203	38,975
Risk management	20,514	10,126	9,575	6,399	11,539
Miscellaneous	10,923	8,055	8,518	8,167	6,334
Depreciation	200,025	206,187	207,349	205,492	172,251
Total operating expenses	668,256	656,420	631,839	587,321	505,979
Operating (loss)	(569,473)	(564,011)	(548,625)	(500,278)	(428,544)
Noncapital subsidies					
Grants and contributions	312,673	329,360	355,638	-	-
Operating (loss) and noncapital subsidies	(256,801)	(234,651)	(192,987)	(500,278)	(428,544)
Nonoperating revenues (expenses):					
Grants and contributions	100,082	128,105	124,604	472,790	386,270
Capital contributions, net	12,929	477	(637)	23,621	1,607,050
Investment earnings	10,123	11,197	10,484	5,056	800
Interest expense	(307)	(289)	(344)	(442)	(551)
Gain (loss) on disposal of assets	(860)	(1,960)	(16,920)	(104)	(762)
Other revenue	2,177	-	-	-	-
Other expenses	(147)	(1,230)	(3,862)	(24,976)	-
Total nonoperating revenues (expenses)	123,997	136,300	113,325	475,945	1,992,807
Changes in net position	$ (132,804)	$ (98,351)	$ (79,662)	$ (24,333)	$ 1,564,263

Note: FY2017-2023 were not restated with the GASB 103 implementation.

San Diego Metropolitan Transit System
Changes in Net Position (in 000's)(Continued)
Last Ten Fiscal Years

	2021	2020	2019	2018	2017
Operating revenues:					
Passenger revenue	$ 47,913	$ 79,532	$ 92,225	$ 90,236	$ 93,279
Advertising	1,013	2,027	1,604	1,131	1,379
Miscellaneous	17,411	18,627	18,831	17,404	18,863
Total operating revenues	66,337	100,186	112,660	108,771	113,521
Operating expenses:					
Personnel costs	151,561	149,331	146,006	146,282	137,021
Outside services	111,280	110,590	107,846	101,574	97,800
Transit operations funding	397	523	498	488	463
Materials and supplies	16,334	14,275	12,927	14,918	13,065
Energy costs	31,262	28,587	28,784	26,414	25,552
Risk management	5,584	7,858	2,183	6,675	4,276
Miscellaneous	4,750	4,394	5,446	5,854	5,934
Depreciation	124,496	127,365	123,007	120,928	123,880
Total operating expenses	445,664	442,923	426,697	423,133	407,991
Operating (loss)	(379,327)	(342,737)	(314,037)	(314,362)	(294,470)
Noncapital subsidies					
Grants and contributions	-	-	-	-	-
Operating (loss) and noncapital subsidies	(379,327)	(342,737)	(314,037)	(314,362)	(294,470)
Nonoperating revenues (expenses):					
Grants and contributions	396,581	312,705	243,544	253,298	232,775
Capital contributions, net	39,010	119,225	106,592	99,551	48,301
Investment earnings	1,086	1,899	1,952	941	636
Interest expense	(686)	(797)	(671)	(809)	(963)
Gain (loss) on disposal of assets	(249)	2,243	(2,351)	(809)	396
Other revenue	-	-	-	-	-
Other expenses	-	-	-	-	-
Total nonoperating revenues (expenses)	435,742	435,275	349,066	352,172	281,145
Changes in net position	$ 56,415	$ 92,538	$ 35,029	$ 37,810	$ (13,325)

Note: FY2017-2023 were not restated with the GASB 103 implementation.

This page intentionally left blank.

REVENUE CAPACITY

This page intentionally left blank.

San Diego Metropolitan Transit System
Operating Revenue by Source (in 000's)
Last Ten Fiscal Years

Fiscal Year Ended	Passenger Fares	Federal Operating Funds	State Operating Funds	Local Operating Funds	Other	Total
San Diego Transit Corporation						
2017	$ 24,864	$ 20,000	$ 17,138	$ 31,038	$ 10	$ 93,050
2018	23,034	20,225	16,467	38,889	187	98,802
2019	22,041	20,500	10,050	40,904	6	93,501
2020	19,749	27,350	12,955	40,401	3	100,458
2021	14,430	46,955	7,374	43,580	-	112,339
2022	14,819	35,700	11,820	38,097	-	100,436
2023	19,666	33,132	20,117	39,396	-	112,311
2024	16,305	39,482	11,923	45,405	2	113,117
2025	17,208	36,573	16,754	47,040	-	117,574
2026	17,941	24,025	13,956	48,012	-	103,933
San Diego Trolley, Inc.						
2017	$ 38,968	$ 23,149	$ 13,609	$ 5,000	$ 704	$ 81,430
2018	39,354	24,247	22,930	-	777	87,308
2019	42,006	24,751	17,012	-	789	84,558
2020	36,464	30,213	23,808	187	740	91,412
2021	19,338	45,824	31,897	-	586	97,645
2022	25,519	39,825	17,086	21,190	904	104,524
2023	26,664	36,897	38,972	24,604	969	128,106
2024	27,191	45,042	33,651	27,231	853	133,968
2025	28,728	51,915	29,895	27,133	1,191	138,862
2026	29,970	38,344	43,828	27,142	720	140,004
MTS - Contracted Services						
2017	$ 29,447	$ 13,838	$ 36,162	$ 2,296	$ 2	$ 81,745
2018	27,848	14,599	38,320	2,699	2	83,468
2019	28,178	15,613	41,445	5,705	1	90,942
2020	23,319	22,221	36,414	9,448	-	91,402
2021	14,146	39,296	26,591	9,875	-	89,908
2022	15,740	33,294	42,426	10,607	-	102,067
2023	21,151	27,516	44,745	10,222	-	103,634
2024	17,725	33,926	53,617	15,213	-	120,481
2025	19,944	32,241	63,775	15,691	-	131,652
2026	22,434	16,973	83,092	12,223	-	134,721

Source: Audited Financial Statements.
Note: FY2017-FY2023 were not restated with the GASB 103 implementation.

San Diego Metropolitan Transit System
Fare Structure
Last Ten Fiscal Years

	2026	2025	2024	2023	2022
***Stored Value One Way Fares**					
One-way fare, Regional	$ 2.50	$ 2.50	$ 2.50	$ 2.50	$ 2.50
Senior/disabled, Regional	1.25	1.25	1.25	1.25	1.25
One-way fare, Premium Regional	5.00	5.00	5.00	5.00	5.00
Senior/disabled, Premium Regional	2.50	2.50	2.50	2.50	2.50
Rural	8.00	8.00	8.00	8.00	8.00
Senior/disabled Rural	4.00	4.00	4.00	4.00	4.00
Bus Cash Fares					
One-way fare, regional	$ 2.50	$ 2.50	$ 2.50	$ 2.50	$ 2.50
Senior/disabled, regional	1.25	1.25	1.25	1.25	1.25
Youth regional	1.25	1.25	1.25	1.25	1.25
Rapid/Express	2.50	2.50	2.50	2.50	2.50
Senior/disabled Rapid/Express	1.25	1.25	1.25	1.25	1.25
Youth Rapid/Express	1.25	1.25	1.25	1.25	1.25
Rapid Express/Premium	5.00	5.00	5.00	5.00	5.00
Senior/disabled Rapid Express/Premium	2.50	2.50	2.50	2.50	2.50
Youth Rapid Express/Premium	2.50	2.50	2.50	2.50	2.50
Rural bus	8.00	8.00	8.00	8.00	8.00
Senior/disabled Rural bus	4.00	4.00	4.00	4.00	4.00
Youth Rural bus	4.00	4.00	4.00	4.00	4.00
Trolley Cash Fares					
One-way fare, all stations	$ 2.50	$ 2.50	$ 2.50	$ 2.50	$ 2.50
Senior/disabled one-way fare	1.25	1.25	1.25	1.25	1.25
Youth one-way fare	1.25	1.25	1.25	1.25	1.25
Bus and Trolley Day Passes					
Regional day pass	$ 6.00	$ 6.00	$ 6.00	$ 6.00	$ 6.00
Senior/disabled and youth	3.00	3.00	3.00	3.00	3.00
Premium regional day	12.00	12.00	12.00	12.00	12.00
Senior/disabled and youth premium regional day	6.00	6.00	6.00	6.00	6.00
Bus and Trolley Monthly Passes					
Regional monthly pass	$ 72.00	$ 72.00	$ 72.00	$ 72.00	$ 72.00
Senior/disabled Regional	23.00	23.00	23.00	23.00	23.00
Youth Regional	-	-	-	-	-
14-Day Regional	-	-	-	-	-
Premium Regional monthly pass	100.00	100.00	100.00	100.00	100.00
Senior/disabled Premium Regional	32.00	32.00	32.00	32.00	32.00
Youth Premium Regional	-	-	-	-	-
14-Day Rapid Express/Premium	-	-	-	-	-

*Riders using PRONTO Stored Value can transfer free to a Regional service within two (2) hours of paying a one-way fare.
*The PRONTO system will charge a customer the cost of a one-way fare per boarding up to a daily and monthly maximum equal to the cost of a Day or Monthly Pass. Once the cap is reached, additional boardings made during the day or month after reaching the cap are free.
Beginning May 2022, Youth riders with a valid PRONTO card are free. Cash paying passengers will still need to pay the youth fare.

SOURCE: SANDAG Comprehensive Fare Ordinance, amendments effective April 2021.

San Diego Metropolitan Transit System
Fare Structure (Continued)
Last Ten Fiscal Years

	2021	2020	2019	2018	2017
***Stored Value One Way Fares**					
One-way fare, Regional	$ -	$ -	$ -	$ -	$ -
Senior/disabled, Regional	-	-	-	-	-
One-way fare, Premium Regional	-	-	-	-	-
Senior/disabled, Premium Regional	-	-	-	-	-
Rural	-	-	-	-	-
Senior/disabled Rural	-	-	-	-	-
Bus Cash Fares					
One-way fare, regional	$ 2.50	$ 2.50	$ 2.25	$ 2.25	$ 2.25
Senior/disabled, regional	1.25	1.25	1.10	1.10	1.10
Youth regional	1.25	1.25	2.25	2.25	2.25
Rapid/Express	2.50	2.50	2.50	2.50	2.50
Senior/disabled Rapid/Express	1.25	1.25	1.25	1.25	1.25
Youth Rapid/Express	1.25	1.25	2.50	2.50	2.50
Rapid Express/Premium	5.00	5.00	5.00	5.00	5.00
Senior/disabled Rapid Express/Premium	2.50	2.50	2.50	2.50	2.50
Youth Rapid Express/Premium	2.50	2.50	5.00	5.00	5.00
Rural bus	8.00	8.00	5.00-10.00	5.00-10.00	5.00-10.00
Senior/disabled Rural bus	4.00	4.00	2.50-5.00	2.50-5.00	2.50-5.00
Youth Rural bus	4.00	4.00	5.00-10.00	5.00-10.00	5.00-10.00
Trolley Cash Fares					
One-way fare, all stations	$ 2.50	$ 2.50	$ 2.50	$ 2.50	$ 2.50
Senior/disabled one-way fare	1.25	1.25	1.25	1.25	1.25
Youth one-way fare	1.25	1.25	2.50	2.50	2.50
Bus and Trolley Day Passes					
Regional day pass	$ 6.00	$ 6.00	$ 5.00	$ 5.00	$ 5.00
Senior/disabled and youth	3.00	3.00	5.00	5.00	5.00
Premium regional day	12.00	12.00	12.00	12.00	12.00
Senior/disabled and youth premium regional day	6.00	6.00	12.00	12.00	12.00
Bus and Trolley Monthly Passes					
Regional monthly pass	$ 72.00	$ 72.00	$ 72.00	$ 72.00	$ 72.00
Senior/disabled Regional	23.00	23.00	18.00	18.00	18.00
Youth Regional	23.00	23.00	36.00	36.00	36.00
14-Day Regional	-	-	43.00	43.00	43.00
Premium Regional monthly pass	100.00	100.00	100.00	100.00	100.00
Senior/disabled Premium Regional	32.00	32.00	25.00	25.00	25.00
Youth Premium Regional	32.00	32.00	50.00	50.00	50.00
14-Day Rapid Express/Premium	-	-	60.00	60.00	60.00

San Diego Metropolitan Transit System
Farebox Recovery Percentage
Last Ten Fiscal Years

Fiscal Year Ended	San Diego Transit	San Diego Trolley	MTS-Contracted Services
2017	26.21	47.81	36.02
2018	23.12	44.89	33.36
2019	23.41	49.71	30.98
2020	19.94	39.16	25.51
2021	12.82	20.32	15.73
2022	14.33	23.86	15.41
2023	17.59	20.67	20.39
2024	13.90	19.69	14.70
2025	13.47	19.20	15.14
2026	12.72	17.48	16.64

Note: FY2017-FY2023 were not restated with the GASB 103 implementation.

Source: Audited financial statements; calculated as passenger revenue divided by operating expenses (less depreciation, GASB 68 related pension expense and GASB 75 related OPEB expenses), and interest expense.

DEBT CAPACITY

This page intentionally left blank.

San Diego Metropolitan Transit System
Ratio of Outstanding Debt by Type
Last Ten Fiscal Years

Year ended June 30	MTS Tower	Pension Obligation Bonds	Leases	Subscription-Based Technology Arrangements (SBITAs)	Total	Percentage of Personal Income	Debt per Capita
2017	$ 1,747,713	$ 17,655,000	$ -	$ -	$ 19,402,713	0.01%	$ 6
2018	1,071,269	15,340,000	-	-	16,411,269	0.01%	5
2019	363,072	12,910,000	-	-	13,273,072	0.01%	4
2020	-	10,355,000	11,667,917	-	22,022,917	0.01%	7
2021	-	7,665,000	11,416,609	1,459,402	20,541,011	0.01%	6
2022	-	4,830,000	11,155,700	1,179,045	17,164,745	0.01%	5
2023	-	1,845,000	10,884,801	2,357,993	15,087,794	0.01%	5
2024	-	-	10,603,511	2,948,291	13,551,802	0.00%	4
2025	-	-	10,339,540	3,030,518	13,370,058	0.00%	4
2026	-	-	10,550,732	3,950,398	14,501,130	0.00%	4

Details regarding MTS's outstanding debt can be found in the notes to the financial statements.

- MTS retired the MTS Tower obligation in FY2020.
- MTS retired the Pension Obligation Bonds in FY2024.
- Ten year historical information is not yet available for leases or SBITAs.

This page intentionally left blank.

DEMOGRAPHIC AND ECONOMIC INFORMATION

San Diego Metropolitan Transit System
Regional Population and Personal Income Statistics
Last Ten Fiscal Years

	County of San Diego Population (1)	County of San Diego Personal Income (thousands) (1)	Per Capita Personal Income (1)	San Diego County Average Unemployment Rate (2)
2017	3,276,113	$ 187,630,531	$ 74,545	4.30%
2018	3,293,350	194,949,226	74,301	3.70%
2019	3,294,272	204,627,597	75,717	3.30%
2020	3,304,281	222,660,949	80,788	13.90%
2021	3,281,991	239,308,923	83,853	7.00%
2022	3,288,754	244,070,477	79,499	3.20%
2023	3,289,885	258,725,373	81,078	4.00%
2024	3,297,545	275,912,735	83,672	4.50%
2025	3,306,766	289,521,311	84,867	4.90%
2026	3,313,060	300,063,442	84,995	4.50%

Source:
(1) California Department of Transportation - Actuals 2017-2022, Forecast 2025-2026.
(2) California Employment Development Department, June 2026.

San Diego Metropolitan Transit System
Full-Time and Part-Time Employees by Function
Last Ten Fiscal Years

	MTS	San Diego Transit	San Diego Trolley	Total
2017	165	825	578	1,568
2018	166	802	593	1,561
2019	166	841	612	1,619
2020	169	833	624	1,626
2021	168	793	643	1,604
2022	160	753	657	1,570
2023	168	763	663	1,594
2024	184	763	735	1,682
2025	191	777	753	1,721
2026	190	752	770	1,712

Source: MTS Human Resources records

San Diego Metropolitan Transit System
Ten Largest Employers in San Diego County

Company Name	Number of Employees (1)	Percent of 1,640,000 County Total (2)
Naval Base San Diego	38,852	2.37%
University of California, San Diego	32,465	1.98%
Sharp HealthCare	21,105	1.29%
County of San Diego	18,197	1.11%
Scripps Health	13,572	0.83%
City of San Diego	13,078	0.80%
San Diego Unified School District	12,794	0.78%
Qualcomm Inc.	10,073	0.61%
Kaiser Permanente	8,566	0.52%
Rady Children's Hospital	6,539	0.40%

Source:

1. Data for fiscal year 2026 not available as of publication date. Data shown for the most recent available information: City of San Diego Annual Comprehensive Financial Report - June 30, 2025.
2. Employment Development Department, State of California, June 2026.

Note: County of San Diego employment information is presented. Employer information is not currently available for the area served by the Metropolitan Transit System within San Diego County. MTS presents only current employment data for the County of San Diego.

OPERATING INFORMATION

San Diego Metropolitan Transit System
Operating Indicators by Function
Last Ten Fiscal Years

	2026	2025	2024	2023	2022
Operating Cost (in 000's)					
San Diego Transit	$ 141,099	$ 127,716	$ 117,297	$ 111,789	$ 103,386
San Diego Trolley	171,498	149,605	138,097	129,013	106,936
MTS-Contract Services	134,785	131,718	120,552	103,708	102,143
Farebox Revenue (in 000's)					
San Diego Transit	$ 17,941	$ 17,208	$ 16,305	$ 19,666	$ 14,819
San Diego Trolley	29,970	28,728	27,191	26,664	25,519
MTS-Contract Services	22,434	19,944	17,725	21,151	15,740
Total Passengers (in 000's)					
San Diego Transit	18,394	18,378	17,819	16,519	13,098
San Diego Trolley	42,047	42,654	39,649	36,047	29,739
MTS-Contract Services	20,676	20,208	18,214	15,945	14,780
Revenue Miles (in 000's)					
San Diego Transit	9,042	9,139	9,052	8,826	9,426
San Diego Trolley	12,212	12,266	12,156	12,701	11,627
MTS-Contract Services	15,087	15,089	14,565	12,569	13,675
Subsidy / Total Passenger					
San Diego Transit	$ 6.70	$ 6.01	$ 5.67	$ 5.58	$ 6.76
San Diego Trolley	3.37	2.83	2.80	2.84	2.74
MTS-Contract Services	5.43	5.53	5.65	5.18	5.85

Note: FY2017-FY2023 were not restated with the GASB 103 implementation.

Source: NTD Report, and audited financial statements.

San Diego Metropolitan Transit System
Operating Indicators by Function (Continued)
Last Ten Fiscal Years

	2021	2020	2019	2018	2017
Operating Cost (in 000's)					
San Diego Transit	$ 112,591	$ 99,027	$ 94,160	$ 99,619	$ 94,878
San Diego Trolley	95,148	93,117	84,507	87,666	81,501
MTS-Contract Services	89,907	91,403	90,942	83,468	81,744
Farebox Revenue (in 000's)					
San Diego Transit	$ 14,430	$ 19,749	$ 22,041	$ 23,034	$ 24,864
San Diego Trolley	19,338	36,464	42,006	39,354	38,968
MTS-Contract Services	14,146	23,319	28,178	27,848	29,447
Total Passengers (in 000's)					
San Diego Transit	8,604	18,383	22,397	22,867	24,315
San Diego Trolley	19,516	32,003	37,294	36,995	37,639
MTS-Contract Services	11,095	20,838	25,667	25,567	26,241
Revenue Miles (in 000's)					
San Diego Transit	9,632	9,236	9,739	9,684	9,626
San Diego Trolley	10,077	9,210	8,821	8,656	8,728
MTS-Contract Services	12,966	14,485	15,666	14,983	15,144
Subsidy / Total Passenger					
San Diego Transit	$ 11.41	$ 4.31	$ 3.22	$ 3.35	$ 2.88
San Diego Trolley	3.88	1.77	1.14	1.31	1.13
MTS-Contract Services	6.83	3.27	2.45	2.18	1.99

Note: FY2017-FY2023 were not restated with the GASB 103 implementation.

Source: NTD Report, and audited financial statements.

San Diego Metropolitan Transit System
Service Performance Data
Last Ten Fiscal Years

	2026	2025	2024	2023	2022
Service Provided					
San Diego Transit					
Vehicle Revenue Miles (in 000's)	9,042	9,139	9,052	8,826	9,426
Vehicle Revenue Hours (in 000's)	783	794	784	762	806
Passengers (in 000's)	18,394	18,378	17,819	16,519	13,098
Passenger Miles (in 000's)	83,025	77,735	77,382	72,309	57,895
Number of Vehicles	256	257	261	258	270
San Diego Trolley					
Vehicle Revenue Miles (in 000's)	12,212	12,266	12,156	12,701	11,627
Vehicle Revenue Hours (in 000's)	685	685	669	693	639
Passenger Car Hours (in 000's)	711	708	691	715	658
Passengers (in 000's)	42,047	42,654	39,649	36,047	29,739
Passenger Miles (in 000's)	266,025	273,848	290,715	248,512	210,465
Number of Vehicles	171	171	176	173	157
MTS-Contracted Services					
Vehicle Revenue Miles (in 000's)	15,087	15,089	14,565	12,569	13,675
Vehicle Revenue Hours (in 000's)	1,297	1,332	1,245	1,119	1,207
Passengers (in 000's)	20,676	20,208	18,214	15,945	14,780
Passenger Miles (in 000's)	87,699	84,061	73,795	65,301	58,910
Number of Vehicles	480	483	481	462	456
Total					
Passengers (in 000's)	81,117	81,240	75,682	68,511	57,617
Passenger Miles (in 000's)	436,749	435,644	441,892	386,122	327,270

Source: NTD Report and MTS internal capital asset system

San Diego Metropolitan Transit System
Service Performance Data (Continued)
Last Ten Fiscal Years

	2021	2020	2019	2018	2017
Service Provided					
San Diego Transit					
Vehicle Revenue Miles (in 000's)	9,632	9,236	9,739	9,684	9,626
Vehicle Revenue Hours (in 000's)	814	782	823	821	822
Passengers (in 000's)	8,604	18,383	22,397	22,867	24,315
Passenger Miles (in 000's)	45,774	80,855	98,896	104,545	109,727
Number of Vehicles	278	277	271	271	278
San Diego Trolley					
Vehicle Revenue Miles (in 000's)	10,077	9,210	8,821	8,656	8,728
Vehicle Revenue Hours (in 000's)	555	508	487	478	490
Passenger Car Hours (in 000's)	571	527	500	486	504
Passengers (in 000's)	19,516	32,003	37,294	36,995	37,639
Passenger Miles (in 000's)	123,389	194,285	219,453	214,376	210,971
Number of Vehicles	163	168	142	131	179
MTS-Contracted Services					
Vehicle Revenue Miles (in 000's)	12,966	14,485	15,666	14,983	15,144
Vehicle Revenue Hours (in 000's)	1,168	1,237	1,305	1,256	1,269
Passengers (in 000's)	11,095	20,838	25,667	25,567	26,241
Passenger Miles (in 000's)	44,276	82,173	97,045	94,665	95,940
Number of Vehicles	468	508	529	536	526
Total					
Passengers (in 000's)	39,215	71,224	85,358	85,429	88,195
Passenger Miles (in 000's)	213,439	357,313	415,394	413,586	416,638

Source: NTD Report and MTS internal capital asset system

San Diego Metropolitan Transit System
Capital Asset Statistics by Function
Last Ten Fiscal Years

	2026	2025	2024	2023	2022
General Operations					
Buildings and structures	1	1	1	1	1
San Diego Transit					
Land (parcels)	5	4	4	2	2
Buildings and structures	15	15	15	11	11
Buses	256	257	261	258	270
Nonrevenue vehicles	8	10	11	11	11
San Diego Trolley					
Trolley stations	63	63	63	63	63
Track miles	65	65	65	65	65
Buildings and structures	4	3	3	2	2
Light rail vehicles (total inventory)	171	171	176	173	157
Nonrevenue vehicles	9	9	9	9	9
MTS - Contracted Services					
Land (parcel)	2	2	2	2	2
Buildings and structures	18	18	18	11	11
Buses	480	483	481	462	456
Nonrevenue vehicles	-	-	2	2	2
For Hire Vehicle Administration					
Buildings and structures	-	-	-	1	1
Nonrevenue vehicles	-	-	-	-	-

Source: MTS ERP System

San Diego Metropolitan Transit System
Capital Asset Statistics by Function (Continued)
Last Ten Fiscal Years

	2021	2020	2019	2018	2017
General Operations					
Buildings and structures	1	1	1	1	1
San Diego Transit					
Land (parcels)	2	2	2	2	2
Buildings and structures	11	11	11	11	9
Buses	278	277	271	271	278
Nonrevenue vehicles	12	14	15	15	12
San Diego Trolley					
Trolley stations	54	55	54	54	54
Track miles	54	54	54	54	54
Buildings and structures	-	-	-	-	-
Light rail vehicles (total inventory)	163	168	142	131	179
Nonrevenue vehicles	10	11	11	11	12
MTS - Contracted Services					
Land (parcel)	2	2	2	2	2
Buildings and structures	11	11	11	5	4
Buses	468	508	529	536	526
Nonrevenue vehicles	2	2	7	7	9
For Hire Vehicle Administration					
Buildings and structures	1	1	1	1	1
Nonrevenue vehicles	-	1	1	1	1

Source: MTS ERP System

San Diego Metropolitan Transit System
Ridership
Last Ten Fiscal Years

	2026	2025	2024	2023	2022
Ridership (in 000's)					
San Diego Transit	18,394	18,378	17,819	16,519	13,098
% Change	0.09%	3.14%	7.87%	26.12%	52.23%
San Diego Trolley	42,047	42,654	39,649	36,047	29,739
% Change	-1.42%	7.58%	9.99%	21.21%	52.38%
MTS - Contracted Services	20,676	20,208	18,214	15,945	14,780
% Change	2.32%	10.95%	14.23%	7.88%	33.21%

Source: NTD Report

San Diego Metropolitan Transit System
Ridership (Continued)
Last Ten Fiscal Years

	2021	2020	2019	2018	2017
Ridership (in 000's)					
San Diego Transit	8,604	18,383	22,397	22,867	24,315
% Change	-53.20%	-17.92%	-2.06%	-5.96%	-5.12%
San Diego Trolley	19,516	32,003	37,294	36,995	37,639
% Change	-39.02%	-14.19%	0.81%	-1.71%	-4.99%
MTS - Contracted Services	11,095	20,838	25,667	25,567	26,241
% Change	-46.76%	-18.81%	0.39%	-2.57%	-3.51%

Source: NTD Report

San Diego Metropolitan Transit System
Operating Subsidy
Last Ten Fiscal Years

	2026	2025	2024	2023	2022
Average Fare per Rider					
San Diego Transit	$ 0.98	$ 0.94	$ 0.92	$ 1.19	$ 1.13
San Diego Trolley	0.71	0.67	0.69	0.74	0.86
MTS - Contract Services	1.09	0.99	0.97	1.33	1.06
Operating Expense per Rider					
San Diego Transit	$ 7.67	$ 6.95	$ 6.58	$ 6.77	$ 7.89
San Diego Trolley	4.08	3.51	3.48	3.58	3.60
MTS - Contract Services	6.52	6.52	6.62	6.50	6.91
Subsidy per Rider					
San Diego Transit	$ 6.69	$ 6.01	$ 5.66	$ 5.58	$ 6.76
San Diego Trolley	3.37	2.84	2.79	2.84	2.74
MTS - Contract Services	5.43	5.53	5.65	5.18	5.85

Note: FY2017-FY2023 were not restated with the GASB 103 implementation.

Source: NTD report and audited financial statements

San Diego Metropolitan Transit System
Operating Subsidy (Continued)
Last Ten Fiscal Years

	2021	2020	2019	2018	2017
Average Fare per Rider					
San Diego Transit	$ 1.68	$ 1.07	$ 0.98	$ 1.01	$ 1.02
San Diego Trolley	0.99	1.14	1.13	1.06	1.04
MTS - Contract Services	1.28	1.12	1.10	1.09	1.12
Operating Expense per Rider					
San Diego Transit	$ 13.09	$ 5.39	$ 4.19	$ 4.36	$ 3.90
San Diego Trolley	4.88	2.91	2.18	2.37	2.17
MTS - Contract Services	8.10	4.39	3.54	3.27	3.12
Subsidy per Rider					
San Diego Transit	$ 11.41	$ 4.32	$ 3.21	$ 3.35	$ 2.88
San Diego Trolley	3.88	1.76	1.05	1.31	1.13
MTS - Contract Services	6.83	3.27	2.44	2.18	2.00

Note: FY2017-FY2023 were not restated with the GASB 103 implementation.

Source: NTD report and audited financial statements

This page intentionally left blank.

REPORT ON INTERNAL CONTROL OVER FINANCIAL REPORTING AND ON COMPLIANCE AND OTHER MATTERS BASED ON AN AUDIT OF FINANCIAL STATEMENTS PERFORMED IN ACCORDANCE WITH *GOVERNMENT AUDITING STANDARDS*

Independent Auditor's Report

To the Board of Directors
of the San Diego Metropolitan Transit System
San Diego, California

We have audited, in accordance with the auditing standards generally accepted in the United States of America and the standards applicable to financial audits contained in *Government Auditing Standards* issued by the Comptroller General of the United States, the financial statements of the business-type activities and the aggregate remaining fund information of the San Diego Metropolitan Transit System ("MTS"), as of and for the year ended June 30, 2026, and the related notes to the basic financial statements, which collectively comprise MTS's basic financial statements, and have issued our report thereon dated November 5, 2026.

Report on Internal Control Over Financial Reporting

In planning and performing our audit of the financial statements, we considered MTS's internal control over financial reporting (internal control) as a basis for designing audit procedures that are appropriate in the circumstances for the purpose of expressing our opinion on the financial statements, but not for the purpose of expressing an opinion on the effectiveness of MTS's internal control. Accordingly, we do not express an opinion on the effectiveness of MTS's internal control.

A *deficiency in internal control* exists when the design or operation of a control does not allow management or employees, in the normal course of performing their assigned functions, to prevent, or detect and correct, misstatements on a timely basis. A *material weakness* is a deficiency, or a combination of deficiencies, in internal control, such that there is a reasonable possibility that a material misstatement of the entity's financial statements will not be prevented, or detected and corrected, on a timely basis. A *significant deficiency* is a deficiency, or a combination of deficiencies, in internal control that is less severe than a material weakness, yet important enough to merit attention by those charged with governance.

Our consideration of internal control was for the limited purpose described in the first paragraph of this section and was not designed to identify all deficiencies in internal control that might be material weaknesses or significant deficiencies. Given these limitations, during our audit we did not identify any deficiencies in internal control that we consider to be material weaknesses. However, material weaknesses or significant deficiencies may exist that have not been identified.

Report on Compliance and Other Matters

As part of obtaining reasonable assurance about whether MTS's basic financial statements are free from material misstatement, we performed tests of its compliance with certain provisions of laws, regulations, contracts, and grant agreements, noncompliance with which could have a direct and material effect on the financial statements. However, providing an opinion on compliance with those provisions was not an objective of our audit, and accordingly, we do not express such an opinion. The results of our tests disclosed no instances of noncompliance or other matters that are required to be reported under *Government Auditing Standards*.

Purpose of this report

The purpose of this report is solely to describe the scope of our testing of internal control and compliance and the results of that testing, and not to provide an opinion on the effectiveness of the entity's internal control or on compliance. This report is an integral part of an audit performed in accordance with *Government Auditing Standards* in considering the entity's internal control and compliance. Accordingly, this communication is not suitable for any other purpose.

San Diego, California
November 5, 2026

November 5, 2026

To the Board of Directors
of the San Diego Metropolitan Transit System
San Diego, California

We have audited the financial statements of the San Diego Metropolitan Transit System ("MTS") for the year ended June 30, 2026, and have issued our report thereon dated November 5, 2026. Professional standards require that we provide you with information about our responsibilities under generally accepted auditing standards, as well as certain information related to the scope and timing of our audit. We have communicated such information in our letter to you dated April 15, 2026. Professional standards also require that we communicate to you the following information related to our audit.

Significant Audit Matters

Qualitative Aspects of Accounting Practices

Management is responsible for the selection and use of appropriate accounting policies. The significant accounting policies used by MTS are described in Note 1 to the basic financial statements.

New Accounting Standards

GASB Statement No. 103 – In April 2024, GASB issued Statement No. 103, *Financial Reporting Model Improvements*. The objective of this Statement is to improve key components of the financial reporting model to enhance its effectiveness in providing information that is essential for decision making and assessing a government's accountability. Application of this statement is effective for MTS's fiscal year ended June 30, 2026. Implementation resulted in updates to the management's discussion and analysis, changes to the presentation of the statement of revenues, expenses, and changes in net position, and certain fiscal year 2025 amounts have been reclassified to conform to the current year presentation. The reclassifications had no effect on previously reported net position. See Note 15 of the Annual Comprehensive Financial Report for additional information.

GASB Statement No. 104 - In September 2024, GASB issued Statement No. 104, *Disclosure of Certain Capital Assets*. The objective of this Statement is to provide users of government financial statements with essential information about certain types of capital assets. The objective will be met by requiring certain types of capital assets to be disclosed separately in the capital assets note disclosures as well as additional disclosures for capital assets held for sale. Application of this statement is effective for MTS's fiscal year ended June 30, 2026.

GASB Statement No. 105 - In December 2025, GASB issued Statement No. 105, *Subsequent Events*. The objective of this Statement is to improve the financial reporting requirements for subsequent events, thereby enhancing consistency in their application and better meeting the information needs of financial statement users. MTS early adopted this Statement for the fiscal year ended June 30, 2026.

We noted no other new accounting policies were adopted and the application of existing policies was not changed during 2026. We noted no transactions entered into by MTS during the year for which there is a lack of authoritative guidance or consensus. All significant transactions have been recognized in the financial statements in the proper period.

Accounting Estimates

Accounting estimates are an integral part of the financial statements prepared by management and are based on management's knowledge and experience about past and current events and assumptions about future events. Certain accounting estimates are particularly sensitive because of their significance to the financial statements and because of the possibility that future events affecting them may differ significantly from those expected.

The most sensitive estimates affecting MTS's financial statements were:

- Management's estimate of the fair value of investments is based on information provided by the State of California, City of San Diego, U.S. Treasury, and financial institutions. We agreed the fair value factor used in determining that it is reasonable in relation to the financial statements as a whole.

- Management's estimate of the depreciation on capital assets is based on the industry standard and past experience on actual useful life of the asset groups. We evaluated the key factors and assumptions used to develop the depreciation on capital assets in determining that it is reasonable in relation to the financial statements taken as a whole.

- Management's estimate for the "more likely than not" amount of sick leave to be accrued in the compensated absences liability is based on historical "days used" data determined by taking a sample of historic sick leave usage patterns.

- Management's estimate of the net other postemployment benefit ("OPEB") liability is based on an actuarial valuation on total OPEB liability. We evaluated the key factors and assumptions used to develop the net OPEB liability in determining that it is reasonable in relation to the financial statements taken as a whole.

- Management's estimate of the net pension liabilities is based on the actuarial valuation on total pension liability and based on audited financial statements on fiduciary net position for CalPERS plans. We evaluated the key factors and assumptions used to develop the net pension liability in determining that it is reasonable in relation to the financial statements taken as a whole.

Certain financial statement disclosures are particularly sensitive because of their significance to financial statement users. The most sensitive disclosures affecting the financial statements were:

Note 1 - Summary of Significant Accounting Polices
Note 2 – Cash, Cash Equivalents, and Investments
Note 5 – Capital Assets
Note 11 – Other Postemployment Benefits
Note 12 – Employee Retirement Systems
Note 13 – Other Required Individual Disclosures
Note 15 – Change in Accounting Principle – GASB 103 Reclassification

The financial statement disclosures are neutral, consistent, and clear.

Difficulties Encountered in Performing the Audit

We encountered no significant difficulties in dealing with management in performing and completing our audit.

Corrected and Uncorrected Misstatements

Professional standards require us to accumulate all known and likely misstatements identified during the audit, other than those that are clearly trivial, and communicate them to the appropriate level of management. Management has corrected all such misstatements. In addition, none of the misstatements detected as a result of audit procedures and corrected by management were material, either individually or in the aggregate, to each opinion unit's financial statements taken as a whole.

Disagreements with Management

For purposes of this letter, a disagreement with management is a financial accounting, reporting, or auditing matter, whether or not resolved to our satisfaction, that could be significant to the financial statements or the auditors' report. We are pleased to report that no such disagreements arose during the course of our audit.

Management Representations

We have requested certain representations from management that are included in the management representation letter dated November 5, 2026.

Management Consultations with Other Independent Accountants

In some cases, management may decide to consult with other accountants about auditing and accounting matters, similar to obtaining a "second opinion" on certain situations. If a consultation involves application of an accounting principle to the governmental unit's financial statements or a determination of the type of auditor's opinion that may be expressed on those statements, our professional standards require the consulting accountant to check with us to determine that the consultant has all the relevant facts. To our knowledge, there were no such consultations with other accountants.

Other Audit Findings or Issues

We generally discuss a variety of matters, including the application of accounting principles and auditing standards, with management each year prior to retention as the governmental unit's auditors. However, these discussions occurred in the normal course of our professional relationship and our responses were not a condition to our retention.

Other Matters

We applied certain limited procedures to the MD&A, the Schedule of Proportionate Share of the Net Pension Liability, the Schedules of Changes in Net Pension Liability and Related Ratios, the Schedules of Contributions, and the Schedules of Changes in the Total OPEB Liability and Related Ratios, which are Required Supplementary Information ("RSI") that supplement the basic financial statements. Our procedures consisted of inquiries of management regarding the methods of preparing the information and comparing the information for consistency with management's responses to our inquiries, the basic financial statements, and other knowledge we obtained during our audit of the basic financial statements. We did not audit the RSI and do not express an opinion or provide any assurance on the RSI.

We were engaged to report on the Combining Statements and the Budgetary Comparison Schedules, which accompany the financial statements but are not RSI. With respect to this supplementary information, we made certain inquiries of management and evaluated the form, content, and methods of preparing the information to determine that the information complies with accounting principles generally accepted in the United States of America, the method of preparing it has not changed from the prior period, and the information is appropriate and complete in relation to our audit of the financial statements. We compared and reconciled the supplementary information to the underlying accounting records used to prepare the financial statements or to the financial statements themselves.

We were not engaged to report on the Introductory and Statistical Sections, which accompany the financial statements but are not RSI. We did not audit or perform other procedures on this other information and we do not express an opinion or provide any assurance on it.

Restriction on Use

This information is intended solely for the use of the MTS Audit Oversight Committee, the MTS Board of Directors, and management of MTS and is not intended to be, and should not be, used by anyone other than these specified parties.

Very truly yours,

The Pun Group, LLP

San Diego, California

THE PUN GROUP
ACCOUNTANTS & ADVISORS

SAN DIEGO METROPOLITAN TRANSIT SYSTEM

Joint Meeting of the Audit Oversight and Executive Committee
For the Fiscal Year Ended June 30, 2026

November 5, 2026

THE PUN GROUP
ACCOUNTANTS & ADVISORS

2021 - 2025
BEST of Accounting™
CLIENT SATISFACTION
DIAMOND AWARD
5

CONTENTS

- Scope of Work
- Audit Responsibilities
- Financial Highlights
- New Accounting Standards
- Required Communications
- Audit Results

SCOPE OF WORK

SCOPE OF WORK

OPINION

2

Financial statement audits

GAAS and GAGAS

- MTS Annual Comprehensive Financial Report
- SDTC Employee Retirement Plan

OPINION

1

Compliance audit

Uniform Guidance / Single Audit

- Federal Transit Cluster (major program)

NO OPINION

3

Agreed-upon procedures

Findings; no opinion

- Transportation Development Act compliance
- National Transit Database
- Indirect cost rate

AS NEEDED

1

Management letter

If recommendations arise

- Internal control and operational observations for management

THE PUN GROUP
ACCOUNTANTS & ADVISORS

AUDIT RESPONSIBILITIES

MANAGEMENT'S RESPONSIBILITIES

Financial reporting

Prepare fairly presented financial statements, MD&A and other information under US GAAP

Policies and estimates

Select appropriate accounting policies and make reasonable estimates

Internal control

Design and maintain controls that prevent and detect fraud and error

Compliance

Comply with laws, regulations, contracts and grant agreements

Going concern

Evaluate whether MTS can keep operating for the next 12 months

Access and representations

Provide records and people we need, and confirm in writing

AUDITOR'S RESPONSIBILITIES

Independent audit

Perform the audit under GAAS and Government Auditing Standards

Reasonable assurance

A high level of assurance, not a guarantee, based on risk-focused testing

Internal control

Understand controls to design our procedures; no opinion on controls

Going concern

Evaluate whether there is substantial doubt about continuing operations

Opinion and reports

Opinion on the financial statements; report on internal control and compliance

Communication

Communicate with those charged with governance; recommend improvements

FINANCIAL HIGHLIGHTS

FINANCIAL HIGHLIGHTS

$3.15B

Total net position

Down $132.8M (4.0%); FY 2025 was down $98.4M

$66.3M

Unrestricted net position

Down $66.3M (50.0%); $64M of reserves used to balance the budget

$98.8M

Operating revenues

Up $6.4M (6.9%); passenger revenue up $4.5M

$668.3M

Operating expenses

Up $11.8M (1.8%); risk management up $10.4M

$312.7M

Noncapital subsidies

Down $16.7M (5.1%); CARES Act funding fully drawn in FY 2025

$100.1M

Capital support revenues

Down $28.0M (21.9%); less TransNet, partly offset by $32M TIRCP

NEW ACCOUNTING STANDARDS

NEW ACCOUNTING STANDARDS

IMPLEMENTED FY 2026

GASB 103

Financial Reporting Model Improvements

Effect: Moderate

- Public support split into noncapital subsidies and capital support
- $12.0M of TransNet and local funding moved out of passenger revenue
- FY 2025 reclassified for comparability

IMPLEMENTED FY 2026

GASB 104

Disclosure of Certain Capital Assets

Effect: Minimal

- Lease, subscription (SBITA), and other intangible assets disclosed separately
- MTS: $10.0M lease and $5.8M SBITA assets, shown separately in Note 5

EARLY ADOPTED FY 2026

GASB 105

Subsequent Events

Effect: Minimal

- Events evaluated through November 5, 2026, the date statements were available to be issued
- No subsequent events to report (Note 17)
- Required for all governments in FY 2027

GASB 103: WHAT IS A SUBSIDY?

Subsidies, as defined by GASB 103

Subsidies received

Resources from another party for which MTS provides no goods or services, and that keep its current or future fares and charges lower than they would otherwise be

Subsidies provided

Resources given to another party for which MTS receives no goods or services, and that are recoverable through its current or future fares and charges

All other transfers

Also treated as subsidies

Capital vs. noncapital

Noncapital subsidies get their own section and subtotal; capital subsidies stay with other nonoperating items

Where the items landed

Noncapital subsidies

Federal, TDA, STA, State, TransNet and local operating funding

Moved out of fares

$12.0M of TransNet and local funding from passenger revenue

Other nonoperating

Capital support and capital contributions

Operating

Fares, advertising and other revenue

Nonoperating is now limited to subsidies, financing, capital asset and inventory disposals, investment income, and endowment contributions (GASB 103, ¶ 13)

GASB 103: FY 2025 BEFORE AND AFTER

	As Previously Reported	GASB 103 Reclass	As Adjusted
Operating revenues	$ 104,396,667	(11,988,193)	$ 92,408,474
Operating expenses	(656,419,508)	–	(656,419,508)
Operating income (loss)	**(552,022,841)**	**(11,988,193)**	**(564,011,034)**
Noncapital subsidies	–	329,360,195	329,360,195
Other nonoperating revenues (expenses)	453,194,384	(316,895,217)	136,299,167
Capital contributions	476,785	(476,785)	–
Change in net position	**$ (98,351,672)**	**–**	**$ (98,351,672)**

Source: Note 15 – Change in Accounting Principle – GASB 103 Reclassification, FY 2026 basic financial statements

$12.0M

Added to operating loss

TransNet and local funding moved from passenger revenue to noncapital subsidies

$0

Bottom-line impact

Change in net position stays at $(98,351,672); only the presentation changed

THE PUN GROUP
ACCOUNTANTS & ADVISORS

REQUIRED COMMUNICATIONS

REQUIRED COMMUNICATIONS

Significant accounting policies

Described in Note 1; GASB 103, 104 and 105 adopted this year

Difficulties encountered

None in dealing with management during the audit

Disagreements with management

None

Corrected misstatements

None material, individually or in total

Uncorrected misstatements

None material, individually or in total

Management representations

Representation letter will be dated November 5, 2026

Consultations with other accountants/auditors

None, to our knowledge

Other findings or issues

None; no matters were a condition of our retention

Source: AU-C 260 communication to the Board of Directors dated [date]

SIGNIFICANT ESTIMATES & DISCLOSURES

Most sensitive estimates

Depreciation of capital assets

Industry standards and actual useful-life experience

Net pension liabilities – $195.1M

Actuarial valuations for CalPERS, PARS and SDTC plans

Compensated absences

Leave balances and expected use under GASB 101

Claims liabilities – $33.0M

Self-insured claims; case reserves and advice of counsel

Most sensitive disclosures

Note 1

Significant Accounting Policies

Note 9

Risk Management

Note 12

Employee Retirement Systems

Note 15

GASB 103 Reclassification

AUDIT RESULTS

AUDIT RESULTS

- **Unmodified (“Clean”) Opinion**
  - Financial statements are fairly presented in all material respects
  - Accounting policies are appropriate; new GASB standards properly adopted
  - Estimates are reasonable
  - Disclosures are properly reflected in the financial statements
  - Supplementary information fairly stated in relation to the financial statements
  - Emphasis of matter: GASB 103 change in accounting principle (Note 15); opinion not modified
- **Government Auditing Standards Report**
  - No material weaknesses or significant deficiencies in internal control identified
  - No instances of noncompliance or other matters required to be reported
- **Single Audit (Uniform Guidance)**
  - Unmodified opinion on compliance; no findings; report to be issued separately
- **Management Letter**
  - No management letter comments

FEDERAL SINGLE AUDIT

FEDERAL AWARDS

$93.1M

Total federal expenditures

Ties to federal revenue in the ACFR

- U.S. DOT $93.0M; Homeland Security $0.1M
- Single Audit threshold now $1 million (up from $750,000); OMB raised it in 2024 to account for inflation and reduce administrative burden

MAJOR PROGRAM

97.8%

Federal Transit Cluster

$91.0M; ALN 20.507 / 20.525 / 20.526

- Unmodified opinion on compliance
- No findings or questioned costs
- MTS qualified as a low-risk auditee

STATUS

Pending

Single Audit report

Draft complete

- No material weaknesses or significant deficiencies over compliance
- Issued once OMB releases the final 2026 Compliance Supplement

DELIVERABLES TIMELINE

Fiscal year 2026 audit and reports

Annual Comprehensive Financial Report

Dated November 5, 2026, with the Government Auditing Standards report

Single Audit report

Once OMB releases the final 2026 Compliance Supplement

SDTC Employee Retirement Plan audit

By December 20, 2026

TDA agreed-upon procedures

By December 20, 2026

Early 2027

NTD

National Transit Database agreed-upon procedures

Indirect Cost

Indirect cost rate agreed-upon procedures



HQ - ORANGE COUNTY
200 E. Sandpointe Avenue
Suite 600
Santa Ana, CA 92707

SAN DIEGO
4660 La Jolla Village Dr.
Suite 100
San Diego CA 92122

BAY AREA
2121 North California Blvd.
Suite 290
Walnut Creek, CA 94596

SACRAMENTO
1511 Corporate Way
Suite 220
Sacramento, CA 95831

LAS VEGAS
1980 Festival Plaza Drive
Suite 300
Las Vegas, NV 89135

PHOENIX
2 N. Central Avenue
Suite 1800
Phoenix, AZ 85004

QUESTIONS?

Metropolitan Transit System

Agenda Item No. 05

MEETING OF THE SAN DIEGO METROPOLITAN TRANSIT SYSTEM
JOINT AUDIT OVERSIGHT AND EXECUTIVE COMMITTEE

November 5, 2026

SUBJECT:

Fiscal Year (FY) 2026 Final Operating Budget Results (Gordon Meyer)

RECOMMENDATION:

That the San Diego Metropolitan Transit System (MTS) Executive Committee receive the MTS operations budget status report for FY 2026 and forward a recommendation to the MTS Board of Directors to approve staff recommendations for programming excess revenues less expenses as follows:

1. Allocate $1,728,000 to the contingency reserve to achieve the Board Policy 36, section 36.4 target of 12.5% for FY 2027; and

2. Allocate the remaining $3,044,000 to the operating deficit reserve for future structural deficit balancing.

Budget Impact

Final FY 2026 results show revenues exceeding expenses by $5,149,000. After reserve-related adjustments, there will be $4,772,000 in excess revenues.

DISCUSSION:

This report summarizes the year-end operating results for FY 2026 compared to the FY 2026 amended budget for MTS. Attachment A-1 combines the operations', administrations', and other activities' results for FY 2026. Attachment A-2 details the FY 2026 combined operations' results and Attachments A-3 to A-7 present budget comparisons for each MTS operation. Attachment A-8 details budget comparisons for MTS Administration, and Attachment A-9 provides FY 2026 results for MTS's other activities (For Hire Vehicle (FHV) Administration/San Diego and Arizona Eastern (SD&AE) Railway Company). Attachment A-10 details subsidy revenue and other non-operating revenue and expenses. Attachment A-11 details MTS's contingency reserve balance. Attachment A-12 includes all MTS reserve balances as of June 30th, 2026.

MTS OPERATING SUBSIDY RESULTS

As indicated within Attachment A-1, for the fiscal year ending June 2026, MTS's net-operating income favorable variance totaled $6,561,000 (1.8%). The favorable budget results were primarily due to favorable experience in other revenue and outside services expenses.

As indicated within Attachment A-10, non-operating net subsidy for FY 2026 was lower than budget by $1,412,000 (-0.4%). This was primarily due to using less reserves than planned as a result of favorable budget results.

In total, revenues exceeded expenses by $5,149,000 for FY 2026.

MTS COMBINED RESULTS

Operating Revenues. Total combined operating revenues for FY 2026 were $118,239,000 compared to the budget of $114,298,000, representing a $3,941,000 (3.4%) favorable variance.

Passenger revenue was favorable to budget by $472,000 (0.6%), primarily due to ridership. FY 2026 ridership was 81,205,000 passengers, compared to a budget of 80,807,000, resulting in a favorable variance of 398,000 (0.5%) passengers. Average fare in FY 2026 was $1.00, which was in line with the budget assumption.

Other revenue was favorable by $3,469,000 (10.4%), primarily due to favorable interest revenue and the recognition of unredeemed stored value fare revenue.

Operating Expenses. Total combined expenses for FY 2026 were $468,445,000 compared to the budget of $471,065,000 resulting in a $2,620,000 (0.6%) favorable variance.

Personnel Costs. Personnel related costs totaled $201,895,000, compared to a budgetary figure of $202,793,000, producing a favorable variance of $898,000 (0.4%). This was primarily due to favorable wages within Bus Operations and Administration combined with favorable flagging cost recovery within Trolley Operations. These favorable variances were partially offset by unfavorable worker's compensation costs, primarily within Bus Operations.

Outside Services and Purchased Transportation. Total outside services expenses for the fiscal year were $168,340,000 compared to a budget of $172,699,000, resulting in a favorable variance of $4,359,000 (2.5%). This was primarily due to favorable Information Technology (IT) costs and contracted security services within Administration, favorable purchased transportation costs for Minibus and Paratransit operations, as well as favorable repair and maintenance costs and professional services within Rail Operations.

Materials and Supplies. Total materials and supplies expenses were $21,554,000, compared to a budgetary figure of $21,334,000, resulting in an unfavorable variance of $220,000 (-1.0%). This was primarily due to unfavorable revenue vehicle parts within Bus Operations.

Energy. Total energy costs were $50,637,000, compared to the budget of $50,990,000, resulting in a favorable variance of $352,000 (0.7%). Compressed natural gas (CNG) costs were $940,000 (6.9%) favorable to budget, primarily due to favorable commodity rates and

consumption, while traction power electricity costs were unfavorable by $1,077,000 (-3.9%) primarily due to unfavorable San Diego Gas & Electric (SDG&E) transmission/demand costs.[1]

Risk Management. Total expenses for risk management were $16,274,000 compared to the budget of $13,599,000, resulting in an unfavorable variance totaling $2,675,000 (-19.7%). This was primarily due to unfavorable claim payments within Bus Operations. The budget assumed usage of the MTS Self-Insurance Reserve (SIR)[2] funds to cover a portion of the high claim costs in FY 2026. However, due to overall favorable operating budget results in FY 2026, no SIR funds were used in balancing the budget.

General and Administrative. Total general and administrative costs were $7,306,000 for FY 2026, compared to a budget of $7,314,000, resulting in a favorable variance of $7,000 (0.1%).

Vehicle and Facility Leases. Vehicle and facility lease costs were $2,438,000 compared to the budget of $2,337,000, resulting in a $101,000 (-4.3%) unfavorable variance.

Subsidy Revenue and Other Non-Operating Revenue and Expenses[3]

Attachment A-10 details subsidy revenue and other non-operating revenue and expenses. Combined subsidy and non-operating revenues for FY 2026 were $355,354,000 compared to the fiscal year budget of $356,767,000, representing an unfavorable variance of $1,412,000 (-0.4%). This was primarily due to using $3,685,000 less from reserves versus the amount planned in the budget.

Subsidy revenue for FY 2026 was $291,058,000 compared to the budget of $288,785,000, resulting in a favorable variance of $2,273,000 (0.8%). Within subsidy, Transportation Development Act (TDA) revenues were $573,000 (0.5%) favorable to budget and TransNet revenues were favorable by $1,592,000 (2.1%). TransNet was primarily favorable due to higher reimbursement from SANDAG for TransNet funded services. Within subsidy revenue, other state revenue was unfavorable $773,000 (-5.7%) compared to budget, primarily due to utilizing less Senate Bill 125 funding for Security and additional trolley service based on lower expenses. Other local subsidies were favorable $742,000 (23.8%) due to classifying reimbursement for

---

[1] MTS purchases the electric commodity from the wholesale energy market managed by the California Independent System Operator (CAISO) under California's Direct Access program. MTS is still required to pay SDG&E for delivery of the electricity (i.e., transmission/distribution costs). SDG&E also separately imposes demand charges related to delivery of energy during peak periods in each bill cycle. This charge is approved by the California Public Utilities Commission (CPUC) and is intended to recover SDG&E's costs for building out electric infrastructure, such as distribution substations and distribution and transmission power lines, in support of costs related to non-generation that are necessary to meet peak demand. (See https://www.sdge.com/businesses/pricing-plans/understanding-demand#charges) The unfavorable variance for FY 26 was mostly due to SDG&E demand charges.

[2] Board Policy 46 establishes guidelines for MTS's Liability Claims Reserve account. Although Policy 46 references a minimum reserve account balance of $2 million, the current balance is $7.5 million, which matches the SIR requirements of MTS's current liability insurance program. https://www.sdmts.com/sites/default/files/POLICY.46.LIABILITY%20CLAIMS%20RESERVE%20ACCOUNT.pdf

[3] Designating various subsidy revenue sources as favorable or unfavorable to budget does not mean that MTS did or did not receive designated subsidy revenue in FY 2026. Instead, it means that MTS either used less of those funds (unfavorable) than expected, or used more of those funds than estimated (favorable) in the budget. In the case of funding that is in MTS's reserve accounts, an "unfavorable" budget result means that MTS still has those funds available to use in future years.

operating the UCSD shuttle as subsidy revenue rather than passenger revenue as assumed in the budget.

As detailed in Attachment A-10, the FY 2026 amended budget for other non-operating income (reserves) assumed the utilization of $67,981,000 from reserves to balance the operating budget. This included the planned usage of $67.6 million from the operating deficit reserve, the usage of $255,000 from the FHV Administration reserve, and the usage of $119,000 from the SD&AE reserve. The actual amount of reserves used in FY 2026 was $64,296,000, or $3,685,000 (-5.4%) lower than budget. This included the usage of $64.1 million from the operating deficit reserve, $216,000 from the FHV Administration reserve, and $15,000 from the SD&AE reserve. Due to favorable budget results, less reserves were needed to balance the FY 2026 budget.

Net Revenues Less Expenses

For FY 2026, MTS had an excess of revenues over expenses totaling $5,149,000.

The amended FY 2026 budget included a projected structural deficit of $106.5 million. Favorable expenses and revenue resulted in an actual structural deficit of $96.7 million in FY 2026.

Reserves

Attachment A-11 details MTS's Contingency Reserve. Under Board Policy 36, the Board's contingency reserve target is 12.5% of the operating budget.

The contingency reserve balance on June 30, 2025, was $51,701,000.

After interest and other adjustments, there was $4,772,000 in excess revenues available for allocation. Staff recommend allocating $1,728,000 to the contingency reserve to achieve the 12.5% target for FY 2027 and contributing the remaining $3,044,000 to the operating deficit reserve for future structural deficit balancing.

This would bring the Contingency Reserve balance to $53,428,000, or 12.5% of the FY 2027 operating budget (net of TransNet funded activities, FHV Administration, and SD&AE expenses). The operating deficit reserve balance would be $6,586,000 and these funds would continue to be used to balance the operating budget in future years until depleted.[4]

/s/ Sharon Cooney
Sharon Cooney
Chief Executive Officer

Key Staff Contact: Julia Tuer, 619.557.4515, Julia.Tuer@sdmts.com

Attachment: A. Comparison to Budget

[4] In FY 2027, MTS's fiscal sustainability strategy begins using SB 125 funding to balance the operating budget. SB 125 is not considered a "reserve" account, but the Board has included structural budget deficit balancing as an approved use of the SB 125 funding allocated to MTS. Current projections estimate SB 125 funding will be exhausted in FY 2030.

SAN DIEGO METROPOLITAN TRANSIT SYSTEM

MTS
CONSOLIDATED
COMPARISON TO BUDGET - FISCAL YEAR 2026
JUNE 30, 2026
(in $000's)

	YEAR TO DATE			
	ACTUAL	BUDGET	VARIANCE	VAR. %
Passenger Revenue	$ 81,292	$ 80,820	$ 472	0.6%
Other Revenue	36,947	33,478	3,469	10.4%
Total Operating Revenue	**$ 118,239**	**$ 114,298**	**$ 3,941**	**3.4%**
Personnel costs	$ 201,895	$ 202,793	$ 898	0.4%
Outside services	168,340	172,699	4,359	2.5%
Materials and supplies	21,554	21,334	(220)	-1.0%
Energy	50,637	50,990	352	0.7%
Risk management	16,274	13,599	(2,675)	-19.7%
General & administrative	7,306	7,314	7	0.1%
Vehicle/facility leases	2,438	2,337	(101)	-4.3%
Administrative Allocation	-	0	0	0.0%
Total Operating Expenses	**$ 468,445**	**$ 471,065**	**$ 2,620**	**0.6%**
Operating Income (Loss)	**$ (350,206)**	**$ (356,767)**	**$ 6,561**	**1.8%**
Total Non-Operating Activities	**355,354**	**356,767**	**(1,412)**	**-0.4%**
Income (Loss) before Capital Contributions	**$ 5,149**	**$ (0)**	**$ 5,149**	

SAN DIEGO METROPOLITAN TRANSIT SYSTEM

OPERATIONS
CONSOLIDATED

COMPARISON TO BUDGET - FISCAL YEAR 2026
JUNE 30, 2026
(in $000's)

	YEAR TO DATE			
	ACTUAL	BUDGET	VARIANCE	VAR. %
Passenger Revenue	$ 81,292	$ 80,820	$ 472	0.6%
Other Revenue	778	703	75	10.7%
Total Operating Revenue	**$ 82,071**	**$ 81,523**	**$ 548**	**0.7%**
Personnel costs	$ 165,661	$ 166,538	$ 878	0.5%
Outside services	137,586	140,011	2,425	1.7%
Materials and supplies	21,361	21,253	(108)	-0.5%
Energy	49,536	49,754	218	0.4%
Risk management	15,213	12,424	(2,789)	-22.5%
General & administrative	1,265	1,322	57	4.3%
Vehicle/facility leases	1,780	1,676	(104)	-6.2%
Administrative Allocation	41,392	41,392	(0)	0.0%
Total Operating Expenses	**$ 433,793**	**$ 434,370**	**$ 577**	**0.1%**
Operating Income (Loss)	**$ (351,723)**	**$ (352,847)**	**$ 1,124**	**0.3%**
Total Non-Operating Activities	**351,723**	**352,847**	**(1,124)**	**-0.3%**
Income (Loss) before Capital Contributions	**$ 0**	**$ (0)**	**$ 0**	**-174.0%**

SAN DIEGO METROPOLITAN TRANSIT SYSTEM

OPERATIONS

BUS - DIRECTLY OPERATED (SAN DIEGO TRANSIT CORP.)

COMPARISON TO BUDGET - FISCAL YEAR 2026

JUNE 30, 2026

(in $000's)

	YEAR TO DATE			
	ACTUAL	BUDGET	VARIANCE	VAR. %
Passenger Revenue	$ 20,777	$ 20,779	$ (3)	0.0%
Other Revenue	58	31	27	86.3%
Total Operating Revenue	**$ 20,834**	**$ 20,810**	**$ 24**	**0.1%**
Personnel costs	$ 100,226	$ 100,815	$ 589	0.6%
Outside services	2,417	2,894	477	16.5%
Materials and supplies	8,554	8,011	(543)	-6.8%
Energy	7,489	7,992	503	6.3%
Risk management	9,024	6,158	(2,866)	-46.5%
General & administrative	682	732	50	6.8%
Vehicle/facility leases	638	620	(18)	-2.9%
Administrative Allocation	7,543	7,543	(0)	0.0%
Total Operating Expenses	**$ 136,573**	**$ 134,765**	**$ (1,808)**	**-1.3%**
Operating Income (Loss)	**$ (115,739)**	**$ (113,955)**	**$ (1,784)**	**-1.6%**
Total Non-Operating Activities	**115,739**	**113,955**	**1,784**	**1.6%**
Income (Loss) before Capital Contributions	**$ -**	**$ (0)**	**$ 0**	**-**

SAN DIEGO METROPOLITAN TRANSIT SYSTEM

OPERATIONS
RAIL (SAN DIEGO TROLLEY INC.)
COMPARISON TO BUDGET - FISCAL YEAR 2026
JUNE 30, 2026
(in $000's)

	YEAR TO DATE			
	ACTUAL	BUDGET	VARIANCE	VAR. %
Passenger Revenue	$ 33,615	$ 32,900	$ 714	2.2%
Other Revenue	721	672	49	7.2%
Total Operating Revenue	**$ 34,335**	**$ 33,572**	**$ 763**	**2.3%**
Personnel costs	$ 64,197	$ 64,478	$ 281	0.4%
Outside services	18,069	19,360	1,291	6.7%
Materials and supplies	12,674	13,114	440	3.4%
Energy	32,535	31,422	(1,112)	-3.5%
Risk management	6,174	6,251	77	1.2%
General & administrative	570	569	(1)	-0.2%
Vehicle/facility leases	740	668	(72)	-10.8%
Administrative Allocation	30,436	30,436	0	0.0%
Total Operating Expenses	**$ 165,394**	**$ 166,297**	**$ 903**	**0.5%**
Operating Income (Loss)	**$ (131,059)**	**$ (132,725)**	**$ 1,666**	**1.3%**
Total Non-Operating Activities	**131,059**	**132,725**	**(1,666)**	**-1.3%**
Income (Loss) before Capital Contributions	**$ -**	**$ (0)**	**$ 0**	**-**

SAN DIEGO METROPOLITAN TRANSIT SYSTEM

OPERATIONS
BUS - CONTRACTED SERVICES (FIXED ROUTE)
COMPARISON TO BUDGET - FISCAL YEAR 2026
JUNE 30, 2026
(in $000's)

	YEAR TO DATE			
	ACTUAL	BUDGET	VARIANCE	VAR. %
Passenger Revenue	$ 25,190	$ 25,351	$ (162)	-0.6%
Other Revenue	-	-	-	-
Total Operating Revenue	**$ 25,190**	**$ 25,351**	**$ (162)**	**-0.6%**
Personnel costs	$ 850	$ 759	$ (91)	-12.0%
Outside services	96,939	97,435	496	0.5%
Materials and supplies	133	128	(5)	-3.9%
Energy	8,330	8,802	471	5.4%
Risk management	-	-	-	-
General & administrative	10	15	5	34.7%
Vehicle/facility leases	59	45	(14)	-30.9%
Administrative Allocation	2,828	2,828	(0)	0.0%
Total Operating Expenses	**$ 109,149**	**$ 110,012**	**$ 862**	**0.8%**
Operating Income (Loss)	**$ (83,960)**	**$ (84,660)**	**$ 701**	**0.8%**
Total Non-Operating Activities	**83,960**	**84,660**	**(701)**	**-0.8%**
Income (Loss) before Capital Contributions	**$ 0**	**$ 0**	**$ (0)**	**-48.2%**

SAN DIEGO METROPOLITAN TRANSIT SYSTEM

OPERATIONS
BUS - CONTRACTED SERVICES (PARATRANSIT)
COMPARISON TO BUDGET - FISCAL YEAR 2026
JUNE 30, 2026
(in $000's)

	YEAR TO DATE			
	ACTUAL	BUDGET	VARIANCE	VAR. %
Passenger Revenue	$ 1,712	$ 1,789	$ (77)	-4.3%
Other Revenue	-	-	-	-
Total Operating Revenue	**$ 1,712**	**$ 1,789**	**$ (77)**	**-4.3%**
Personnel costs	$ 227	$ 199	$ (28)	-14.0%
Outside services	19,594	19,755	161	0.8%
Materials and supplies	-	-	-	-
Energy	1,182	1,538	356	23.2%
Risk management	15	15	-	0.0%
General & administrative	4	7	3	47.9%
Vehicle/facility leases	343	343	0	0.1%
Administrative Allocation	585	585	0	0.0%
Total Operating Expenses	**$ 21,949**	**$ 22,442**	**$ 494**	**2.2%**
Operating Income (Loss)	**$ (20,237)**	**$ (20,653)**	**$ 416**	**2.0%**
Total Non-Operating Activities	**20,237**	**20,653**	**(416)**	**-2.0%**
Income (Loss) before Capital Contributions	**$ 0**	**$ (0)**	**$ 0**	**-115.9%**

SAN DIEGO METROPOLITAN TRANSIT SYSTEM

OPERATIONS
CORONADO FERRY

COMPARISON TO BUDGET - FISCAL YEAR 2026
JUNE 30, 2026
(in $000's)

	YEAR TO DATE			
	ACTUAL	BUDGET	VARIANCE	VAR. %
Passenger Revenue	$ -	$ -	$ -	-
Other Revenue	-	-	-	-
Total Operating Revenue	**$ -**	**$ -**	**$ -**	**-**
Personnel costs	$ -	$ -	$ -	-
Outside services	332	332	-	0.0%
Materials and supplies	-	-	-	-
Energy	-	-	-	-
Risk management	-	-	-	-
General & administrative	-	-	-	-
Vehicle/facility leases	-	-	-	-
Administrative Allocation	-	-	-	0.0%
Total Operating Expenses	**$ 332**	**$ 332**	**$ -**	**0.0%**
Operating Income (Loss)	**$ (332)**	**$ (332)**	**$ -**	**0.0%**
Total Non-Operating Activities	**332**	**332**	**-**	**0.0%**
Income (Loss) before Capital Contributions	**$ -**	**$ -**	**$ -**	**-**

SAN DIEGO METROPOLITAN TRANSIT SYSTEM

ADMINISTRATION
CONSOLIDATED

COMPARISON TO BUDGET - FISCAL YEAR 2026
JUNE 30, 2026
(in $000's)

	YEAR TO DATE			
	ACTUAL	BUDGET	VARIANCE	VAR. %
Passenger Revenue	$ -	$ -	$ -	-
Other Revenue	34,951	31,621	3,330	10.5%
Total Operating Revenue	**$ 34,951**	**$ 31,621**	**$ 3,330**	**10.5%**
Personnel costs	$ 35,551	$ 35,551	$ (0)	0.0%
Outside services	30,210	32,141	1,931	6.0%
Materials and supplies	193	80	(113)	-141.8%
Energy	1,096	1,229	132	10.8%
Risk management	969	1,033	64	6.2%
General & administrative	5,980	5,928	(52)	-0.9%
Vehicle/facility leases	630	632	2	0.4%
Administrative Allocation	(41,426)	(41,426)	0	0.0%
Total Operating Expenses	**$ 33,203**	**$ 35,167**	**$ 1,963**	**5.6%**
Operating Income (Loss)	**$ 1,748**	**$ (3,546)**	**$ 5,293**	**149.3%**
Total Non-Operating Activities	**3,401**	**3,546**	**(145)**	**-4.1%**
Income (Loss) before Capital Contributions	**$ 5,149**	**$ 0**	**$ 5,149**	

SAN DIEGO METROPOLITAN TRANSIT SYSTEM

OTHER ACTIVITIES
CONSOLIDATED

COMPARISON TO BUDGET - FISCAL YEAR 2026
JUNE 30, 2026
(in $000's)

	YEAR TO DATE			
	ACTUAL	BUDGET	VARIANCE	VAR. %
Passenger Revenue	$ -	$ -	$ -	-
Other Revenue	1,218	1,154	63	5.5%
Total Operating Revenue	**$ 1,218**	**$ 1,154**	**$ 63**	**5.5%**
Personnel costs	$ 684	$ 705	$ 21	3.0%
Outside services	544	547	3	0.6%
Materials and supplies	0	1	0	54.6%
Energy	5	7	2	30.2%
Risk management	92	143	51	35.5%
General & administrative	61	64	3	4.3%
Vehicle/facility leases	28	28	0	1.5%
Administrative Allocation	35	35	(0)	0.0%
Total Operating Expenses	**$ 1,448**	**$ 1,528**	**$ 80**	**5.2%**
Operating Income (Loss)	**$ (230)**	**$ (374)**	**$ 143**	**38.4%**
Total Non-Operating Activities	**230**	**374**	**(143)**	**-38.4%**
Income (Loss) before Capital Contributions	**$ -**	**$ 0**	**$ (0)**	**-**

SAN DIEGO METROPOLITAN TRANSIT SYSTEM
MTS
COMBINED SUBSIDY AND OTHER NON-OPERATING REVENUE AND EXPENSES
COMPARISON TO BUDGET - FISCAL YEAR 2026
JUNE 30, 2026
(in $000's)

	YEAR TO DATE			
	ACTUAL	BUDGET	VARIANCE	VAR. %
Subsidy Revenue				
Federal Revenue	$ 79,442	$ 79,321	$ 121	0.2%
Federal Other	7	0	7	-
Transportation Development Act	107,301	106,729	573	0.5%
State Transit Assistance	9,349	9,338	11	0.1%
State Revenue - Other	12,762	13,535	(773)	-5.7%
TransNet funds	78,335	76,743	1,592	2.1%
Other Local subsidies	3,862	3,120	742	23.8%
Total Subsidy Revenue	**$ 291,058**	**$ 288,785**	**$ 2,273**	**0.8%**
Other Non-Operating Revenue and Expense				
Investment Earnings	$ -	$ -	$ -	-
Other Non-Operating Income	64,296	67,981	(3,685)	-5.4%
Other Non-Operating Expenses	0	0	0	-
Total Other Non-Operating Revenue Revenue and Expense	**$ 64,296**	**$ 67,981**	**$ (3,685)**	**-5.4%**
Total Subsidy and Non-Operating Revenue and Expense	**$ 355,354**	**$ 356,767**	**$ (1,412)**	**-0.4%**

SAN DIEGO METROPOLITAN TRANSIT SYSTEM

MTS

CONTINGENCY RESERVE BALANCE

JUNE 30, 2026

(in $000's)

Balance, June 30, 2025			**$**	**51,701**
Current Year Adjustments:				
FY 2026 Net Income	$	5,149		
Interest & Other Adjustments	$	(377)		
Contribute to Operating Deficit Reserve	$	(3,044)		
Net Adjustments:			**$**	**1,728**
Balance, June 30, 2026			**$**	**53,428**
FY27 Operating Expense Budget			**$**	**482,500**
FY27 Operating Budget Adjustments:				
Debt Service	$	-		
FHV Admin/SD&AE	$	(1,145)		
Transnet Funded Operations	$	(53,927)		
Net Adjustments:			**$**	**(55,073)**
Adjusted FY27 Operating Expense Budget			**$**	**427,427**
Contingency Reserve % of MTS Operating Expense Budget				**13%**

SAN DIEGO METROPOLITAN TRANSIT SYSTEM

MTS
RESERVE BALANCES
JUNE 30, 2026

Title	Amount	Explanation
Contingency	$ 53,428,371	For ongoing operations, future matching of grants; target is 12.5% of operating budget per Policy 36
Operating Deficit	$ 6,586,028	For ongoing operations, specifically for funding projected structural deficits in operating budget until depleted
FHV Administration	893,473	For ongoing operations and future capital improvement needs
SD&AE	1,567,655	Established from 1984 state payments for storm damage, restriced for repair/improvement of line
Insurance	7,500,000	Established for potential future liability claims, minimum $2 million per Policy 46
Billboard San Diego	774,925	Per agreement with city, used for improvements to right of way
Billboard Chula Vista	1,125,915	Per agreement with city, used for improvements to right of way
Total	**$ 71,876,367**	

Metropolitan Transit System

Metropolitan Transit System FY 2026 Operating Budget – June 2026 Financial Review

Executive Committee

CONSOLIDATED MTS OPERATIONS

COMPARISON TO BUDGET – JUNE 30, 2026 - FY 2026

TOTAL OPERATING REVENUES ($000's)

	ACTUAL	BUDGET	VARIANCE	VAR %
Fare Revenue	$ 81,292	$ 80,820	$ 472	0.6%
Other Operating Revenue	$ 36,947	$ 33,478	$ 3,469	10.4%
Operating Revenue	**$ 118,239**	**$114,298**	**$ 3,941**	**3.4%**

- Fare Revenue
  - Revenue favorable to prior year by $3.4M (4.4% growth)
  - Ridership favorable to the prior year by 283K passengers (0.3% growth)
  - Average fare $1.00 versus $0.96 prior year (4.0% growth)
- Other Operating Revenue
  - Unredeemed stored value revenue was $1.5M favorable
  - Interest revenue was $866K favorable
  - Energy credit revenue was $253K favorable
  - Miscellaneous revenue was $484K favorable

CONSOLIDATED MTS OPERATIONS

COMPARISON TO BUDGET – JUNE 30, 2026 - FY 2026

TOTAL OPERATING EXPENSES ($000's)

	ACTUAL	BUDGET	VARIANCE	VAR %
Personnel Costs	$ 201,895	$202,793	$ 898	0.4%
Purchased Transportation	$ 110,920	$111,608	$ 688	0.6%
Other Outside Services	$ 57,420	$ 61,091	$ 3,671	6.0%
Energy	$ 50,637	$ 50,990	$ 352	0.7%
Other Expenses	$ 47,572	$ 44,583	$ (2,989)	-6.7%
Operating Expenses	**$ 468,445**	**$471,065**	**$ 2,620**	**0.6%**

- Personnel – favorable wages within Bus Ops and Admin, flagging cost recovery within Rail Ops
- Purchased Transportation – favorable in Minibus and Paratransit, primarily due to strike
- Other Outside Services – favorable IT costs and contracted security within Admin, favorable repair and maintenance costs within Trolley operations
- Other Expenses – Risk Management unfavorable $2.7M due to not utilizing Self-Insurance Reserve (SIR) at year end due to favorable budget results

CONSOLIDATED MTS OPERATIONS

COMPARISON TO BUDGET – JUNE 30, 2026 - FY 2026

TOTAL OPERATING ACTIVITIES ($000's)

	ACTUAL	BUDGET	VARIANCE	VAR %
MTS Operating Revenue	$ 118,239	$ 114,298	$ 3,941	3.4%
MTS Operating Expenses	$ 468,445	$ 471,065	$ 2,620	0.6%
Total Net Operating Variance	**$ (350,206)**	**$ (356,767)**	**$ 6,561**	**1.8%**

SUBSIDY REVENUE CATEGORY DESCRIPTIONS

- Federal
  - Recurring FTA funds for preventive maintenance and rural ops (5307, 5337, 5311)
- Transportation Development Act (TDA)
  - 1/4 percent of regional sales tax assessed in region and administered by SANDAG and County
- Transnet
  - ½ cent sales tax in San Diego County to fund transportation projects
  - MTS receives formula share and reimbursement for Transnet funded operations

SUBSIDY REVENUE CATEGORY DESCRIPTIONS

- State Transit Assistance (STA)
  - State sales tax on diesel fuel distributed based on population and agency revenue

- Senate Bill 125 TIRCP (SB125)
  - $4 billion in State TIRCP funding distributed to transit agencies on a population-based formula

CONSOLIDATED MTS OPERATIONS

COMPARISON TO BUDGET – JUNE 30, 2026 - FY 2026

TOTAL NON-OPERATING REVENUES ($000's)

	ACTUAL	BUDGET	VARIANCE	VAR %
Federal (Recurring)	$ 79,442	$ 79,321	$ 121	0.2%
Federal Other	7	-	7	
TDA	107,301	106,729	573	0.5%
TransNet	78,335	76,743	1,592	2.1%
STA	9,349	9,338	11	0.1%
SB125 TIRCP (Non-recurring)	12,762	13,535	(773)	-5.7%
Other	3,862	3,120	742	23.8%
Subsidy Revenues	**$ 291,058**	**$ 288,785**	**$ 2,273**	**0.8%**
Reserves	64,296	67,981	(3,685)	-5.4%
Other Non-Operating Revenues	**$ 64,296**	**$ 67,981**	**$ (3,685)**	**-5.4%**
Total Non-Operating Revenues	**$ 355,354**	**$ 356,767**	**$ (1,412)**	**-0.4%**

CONSOLIDATED MTS OPERATIONS

COMPARISON TO BUDGET – JUNE 30, 2026 - FY 2026

TOTAL REVENUES LESS EXPENSES ($000's)

	ACTUAL	BUDGET	VARIANCE
Operating Revenues	$ 118,239	$ 114,298	$ 3,941
Recurring Subsidy	253,296	250,250	3,046
Total Recurring Revenues	**$ 371,536**	**$ 364,549**	**6,987**
Total Expenses	**$ 468,445**	**$ 471,065**	**$ 2,620**
Structural Deficit	**(96,909)**	**(106,516)**	**9,607**
Reserves	64,296	67,981	(3,685)
Shift TDA from Capital	25,000	25,000	-
SB-125 Funding	12,762	13,535	(773)
Revenues Less Expenses	**$ 5,149**	**$ (0)**	**$ 5,149**

- Structural deficit of $96.9M
- Total excess revenues over expenses of $5.1M
  - Also used $3.7M less from reserves than planned
  - Excess revenue over expenses of $5.1M needs to be programmed

CONSOLIDATED MTS OPERATIONS

COMPARISON TO BUDGET – JUNE 30, 2026 - FY 2026

CONTINGENCY RESERVE BALANCE ($000's)

- Board policy for the contingency reserve balance
  - Target set at 12.5% of the Operating Expense Budget
  - FY27 Target of $53.4M
  - Reserve Balance: $51.7M balance at start of FY26

- FY26 Results
  - $5.1M excess revenue over expenses
  - $4.8M after interest adjustment

- Proposed allocation:
  - $1.7M to contingency reserve
    - Contingency Reserve balance would be $53.4M (12.5%)
  - $3.0M to Operating Deficit Reserve
    - Operating Deficit Reserve balance would be $6.6M
    - Used for future deficit balancing

Staff Recommendation

That the Joint AOC/Executive Committee forward a recommendation to the Board of Directors to approve the allocation of $4.8M in excess revenues over expenses to the following:

- $1,728,000 to the contingency reserve to achieve 12.5% target for FY27
- $3,044,000 to the operating deficit reserve for structural deficit balancing

Metropolitan Transit System

Agenda Item No. 06

MEETING OF THE SAN DIEGO METROPOLITAN TRANSIT SYSTEM
JOINT AUDIT OVERSIGHT AND EXECUTIVE COMMITTEE

November 5, 2026

SUBJECT:

Grants Administration Report (Julia Tuer, Kena Teon, and Vanessa Slifer)

INFORMATIONAL ONLY

Budget Impact

None.

DISCUSSION:

The San Diego Metropolitan Transit System (MTS) Grants Team manages all federal and state programs for both formula and competitive grants. These grant opportunities assist in funding portions of MTS's operating and capital budgets. Staff will provide a report on all grant administration activities over the past year.

/s/ Sharon Cooney
Sharon Cooney
Chief Executive Officer

Key Staff Contact: Julia Tuer, 619.557.4515, Julia.Tuer@sdmts.com

Attachment: A. MTS Grants Administration Infographic

San Diego Metropolitan Transit System (MTS) is a California public agency comprised of San Diego Transit Corp., San Diego Trolley, Inc. and San Diego and Arizona Eastern Railway Company (nonprofit public benefit corporations). MTS member agencies include the cities of Chula Vista, Coronado, El Cajon, Imperial Beach, La Mesa, Lemon Grove, National City, Poway, San Diego, Santee, and the County of San Diego. MTS is also the For-Hire Vehicle administrator for multiple cities in San Diego County.

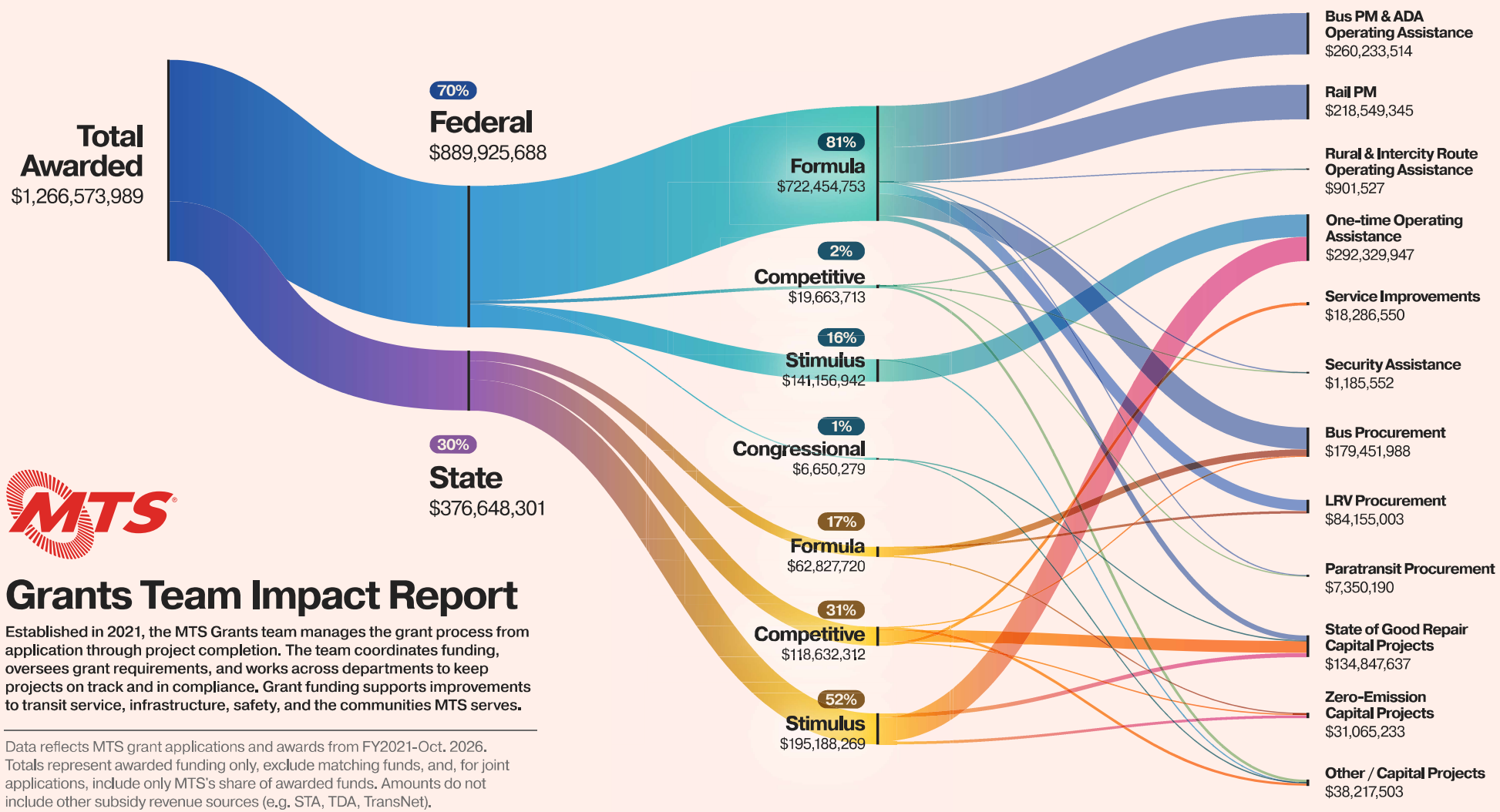

Grants Team Impact Report

Established in 2021, the MTS Grants team manages the grant process from application through project completion. The team coordinates funding, oversees grant requirements, and works across departments to keep projects on track and in compliance. Grant funding supports improvements to transit service, infrastructure, safety, and the communities MTS serves.

Data reflects MTS grant applications and awards from FY2021-Oct. 2026. Totals represent awarded funding only, exclude matching funds, and, for joint applications, include only MTS's share of awarded funds. Amounts do not include other subsidy revenue sources (e.g. STA, TDA, TransNet).

Project Expense Category		Typical Funding Source	Examples of Use
Operations	Bus PM & ADA Operating Assistance	FTA Section 5307	Supports vehicle preventive maintenance and operating costly, ADA-mandated complementary paratransit service.
	Rail PM	FTA Section 5337	Supports Light Rail Vehicle (LRV) and rail facility preventive maintenance.
	Rural & Intercity Route Operating Assistance	FTA Sections 5311, 5311(f)	Funding towards operating costs for intercity and rural bus route service.
	One-time Operating Assistance	American Rescue Plan Act of 2021 (ARPA) SB 125 Funding	One-time stimulus funds like these support operating and capital costs during economic downturns.
	Service Improvements	Affordable Housing and Sustainable Communities (AHSC)	The Sustainable Transportation Infrastructure (STI) portion of the AHSC grant provides funding for service *improvements* - such as increasing Trolley frequency for a certain period of time.
	Security Operating Assistance	Transit Security Grant Program (TSGP) National Explosives Detection Canine Team Program (NEDCTP)	These programs administered by FEMA and TSA support operating costs for MTS Transit Enforcement K-9 teams.
Capital	Bus Procurement	FTA Sections 5307, 5339(a) Low Carbon Transit Operations Program (LCTOP) SB1 State of Good Repair (SGR) VW Environmental Mitigation Trust	A combination of funding sources support the procurement of MTS fixed route buses powered by CNG or electricity - used mainly to replace aging vehicles at the end of their useful life.
	LRV Procurement	FTA Section 5337 FHWA Surface Transportation Block Grant (STBG) transfer funds SB1 State of Good Repair (SGR)	A combination of funding sources support the replacement of aging Light Rail Vehicles (LRVs).
	Paratransit Procurement	FTA Section 5339(a), 5307 SANDAG Specialized Transportation Grant Program (STGP)	These programs support the replacement of aging paratransit buses used for ADA-mandated complementary paratransit service.
	State of Good Repair Capital Projects	Transit and Intercity Rail Capital Program (TIRCP) SB125 Funding FTA Sections 5307, 5337 Community Project Funding (CPF)	A combination of grants support various capital projects to bring rail and bus infrastructure into a state of good repair. This includes replacement of special track (e.g. crossovers, diamonds, wyes, turnouts, grade crossings, and switches), electrical substations, station escalator equipment, station HVAC equipment, Variable Messaging Signs (VMS) and Public Announcement (PA) systems, grade cross warning and signaling systems, crossing approaches, and pedestrian crossings. Most notably, the ongoing rehabilitation of the Orange Line.
	Zero-Emission Capital Projects	SB125 Funding Low Carbon Transit Operations Program (LCTOP) Transit and Intercity Rail Capital Program (TIRCP) SB1 State of Good Repair (SGR) Community Project Funding (CPF)	Various grant programs support capital projects related to the transition to zero-emission transit infrastructure and service. This includes the electrification of the MTS Southbay Division (SB), Imperial Avenue Division (IAD), and future Clean Transit Advancement Campus (CTAC) Division.
	Other / Capital Projects	FTA Section 5339(b) Transit and Intercity Rail Capital Program (TIRCP) Transformative Climate Communities (TCC) Clean California Local Grant Program (CCLGP) Transit Security Grant Program (TSGP) American Rescue Plan Act of 2021 (ARPA) Route Planning Restoration Sustainable Transportation Planning Grant (STPG) Affordable Housing and Sustainable Communities (AHSC)	Several grant programs support projects in this catch-all category, including various capital projects not categorized as state of good repair or zero-emission. Some notable examples include: design and construction of new Kearny Mesa Transit Center (KMTC), design and rehabilitation of the 12th & Imperial Transit Center, Beyer Blvd Pathway Beautification design and construction. Also included in this category are planning studies, procurement of transit enforcement equipment, and the procurement and installation of bus shelters.

Metropolitan Transit System

Grants Administration Report

Executive Committee

Team Structure

The grants team is a cross-functional team comprised of two departments, Government Affairs and Finance that work together closely to secure complex funding opportunities.

Julia Tuer, Manager of Government Affairs
Manages government affairs and the overall grant administration process

Eric Cheng, TA Manager
Manages overall CIP process and provides financial oversight of the grant process

Kena Teon,
Grants Administrator

Vanessa Slifer,
Grants Analyst

Etta Bowman,
Assistant Manager – TA

Regional Support & Collaboration

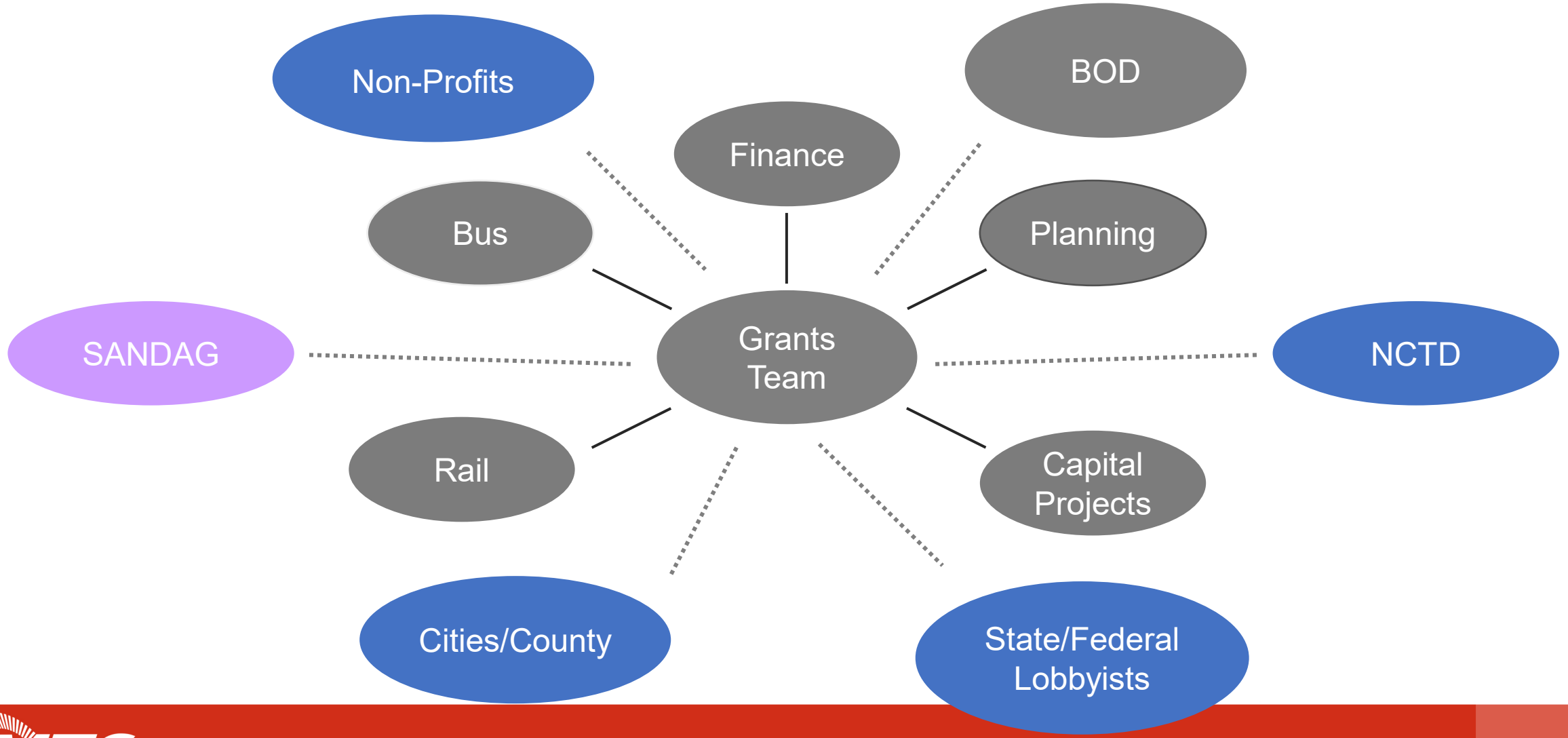

Grants Administration

- Funding Research
- Communications
  - Staff
  - Lobbyists
  - Grantors
- Application Development
- Submissions
- Implementation of Projects
- Project Management and Support
- Grantor Partnerships
- Financial Tasks and Responsibilities
- Reporting & Compliance Management

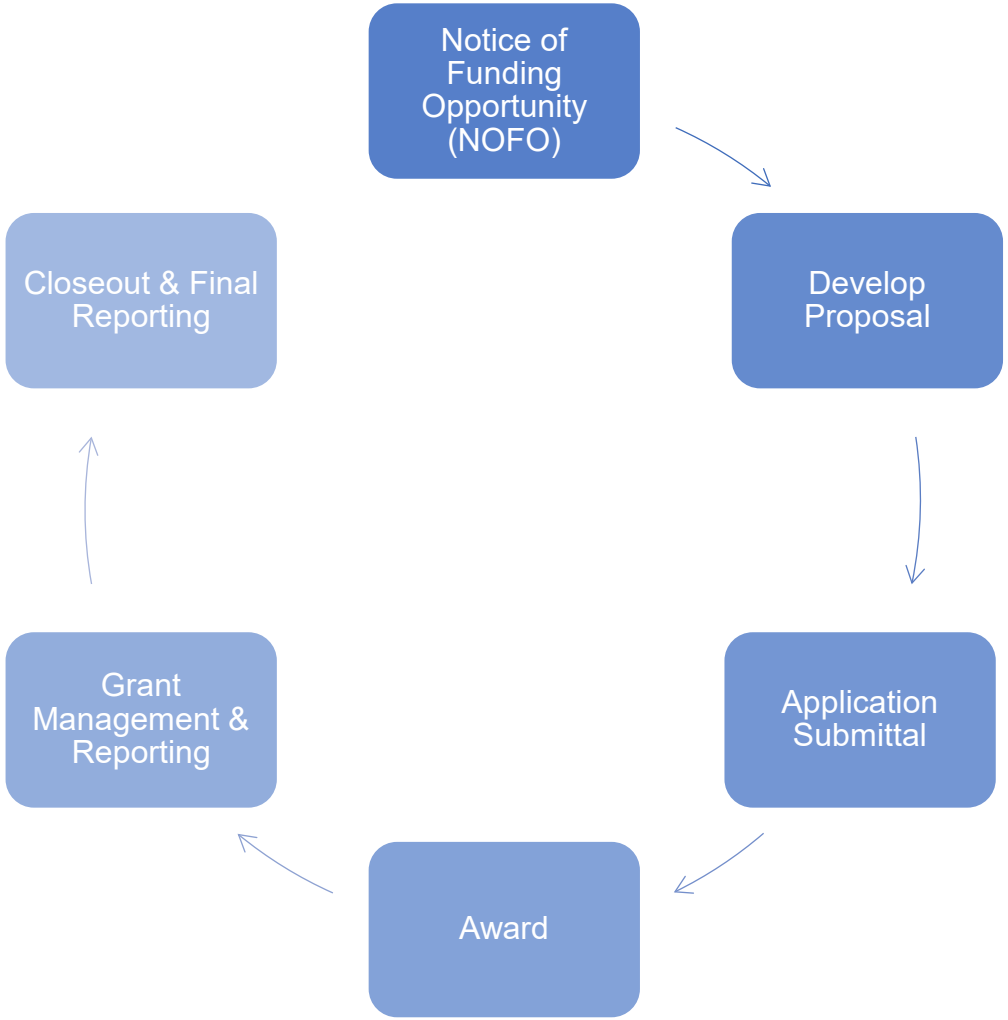

Types of Grants: Formula and Competitive

Formula

- Annual funds allocated to MTS
  - Does not rely on a competitive process
  - Separate process from one-time direct funding sources (e.g., CARES Act, ARP, SB 125, etc.)
- Primarily used for preventive maintenance and capital projects
- Reimbursement type varies

Competitive/Discretionary

- Awarded through a competitive application process (recipients are not pre-determined)
- Unique performance goals, criteria, and timeframes must be met under competitive opportunities
- Paid on a reimbursement basis

Formula Grant Summary

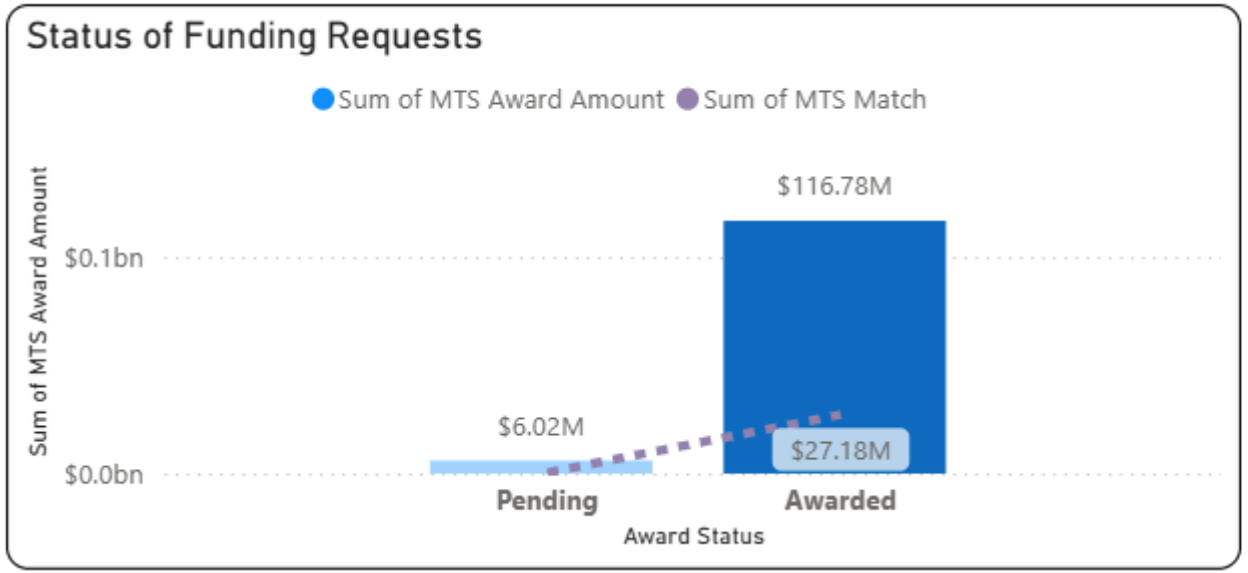

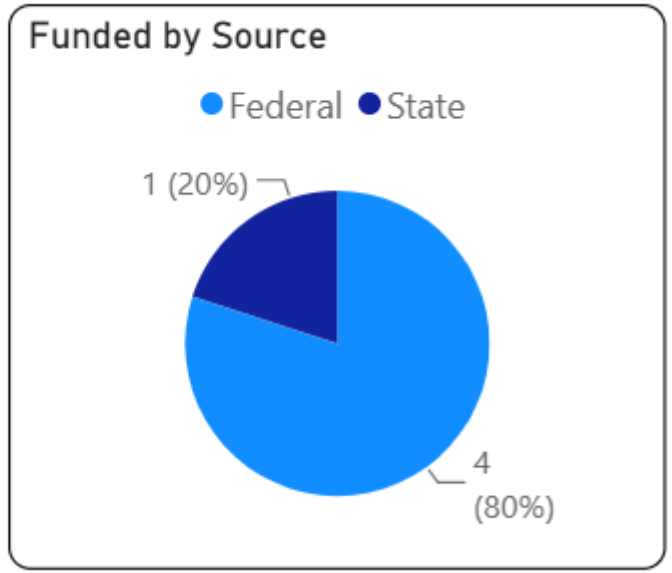

Submittal Date	Grantor	Cycle	Program	Project Name	Award Status	MTS Award Amount	MTS Match
2026-04	Caltrans	Cycle A	Low Carbon Transit Operations Program (LCTOP)	YOP Program	Pending	$5,561,515	$0
2026-07	FTA	FFY26	Section 5307 Urbanized Area	Bus PM, ADA Operation, Bus Replacement and HVAC Project	Awarded	$64,854,048	$14,532,306
2026-07	FTA	FFY26	Section 5337 Rail State of Good Repair	Rail PM and Rail Projects	Awarded	$47,433,211	$11,858,304
2026-07	FTA	FFY26	Section 5339 (a) Bus and Bus Facilities Formula	Bus Procurement	Awarded	$4,496,075	$793,425
2026-08	Caltrans	FFY2026	Section 5311 Rural Operations Assistance	Operating and Payroll Assistance	Pending	$458,073	$372,175
Total						**$122,802,922**	**$27,556,210**

Stimulus / SB 125 Summary

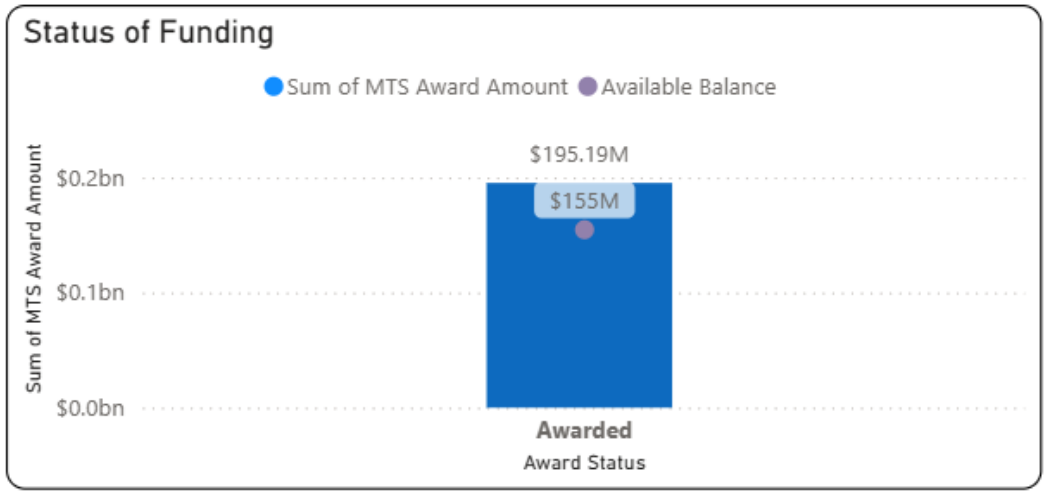

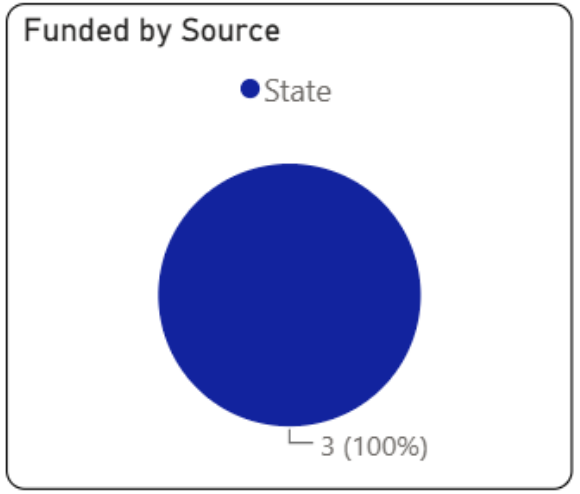

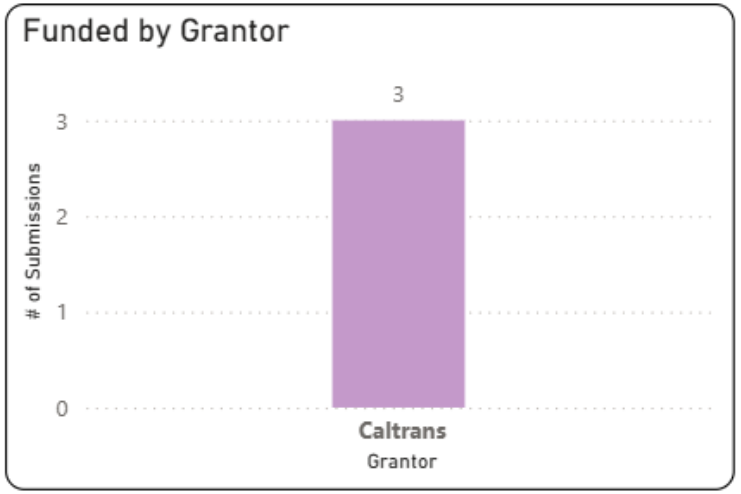

Submittal Date	Grantor	Cycle	Program	Project Name	Award Status	MTS Award Amount	Remaining Balance
2023-12	Caltrans	Cycle 1	SB 125 Transit Program - TIRCP Formula	TIRCP $92,515,843 - Operations TIRCP $26,000,000 - Capital	Awarded	$118,515,843	$77,898,309
2023-12	Caltrans	Cycle 1	SB 125 Transit Program - ZETCP	ZETCP $8,000,976 - Capital ZETCP $9,264,288 - Capital	Awarded	$17,265,264	$17,265,264
2023-12	Caltrans	Cycle 2	SB 125 Transit Program - TIRCP Formula	TIRCP Y2 $59,407,162 - Operations	Awarded	$59,407,162	$59,407,162
Total						**$195,188,269**	**$154,570,735**

Competitive Grant Summary

Submittal Date	Grantor	Cycle	Program	Project Name	Award Status	MTS Award Amount	MTS Match	Total Application Amount
2025-07	FTA	FFY2025	FY25 Buses and Bus (5339b)Program	Kearny Mesa Transit Center: Design and Construction	Awarded	$14,680,000	$2,936,000	$17,616,000
2025-08	FEMA	FFY2025	Transit Security Grant Program (TSGP)	30 Radios, RCS Airtime and GPS Services and K-9 Operations	Awarded	$715,014	$0	$309,793
2025-09	HCD	Round 9	Affordable Housing and Sustainable Communities Program (AHSC)	Round 9: Saint Vincent De Paul	Awarded	$6,774,557	$0	$6,774,557
2026-07	FEMA	FFY2026	Transit Security Grant Program (TSGP)	Central Command Dispatch Center System Upgrade - Phase 1	Awarded	$818,101	$0	$818,101
2026-08	FTA	FFY2026	Operation Lifesaver Competitive Rail Transit Safety Education Grants	Rail Safety Campaign: Trolley Wrap and Materials for Handouts	Awarded	$20,000	$7,138	$27,138
2025-07	FTA	FFY2025	FY25 Low/No (5339c) Program	BEB Procuremement (5, 60-foot buses)	No Award	$8,408,570	$1,483,870	$9,892,440
2025-11	FTA	26-27	Sustainable Transportation Planning Grant (STPG) Program	MTS Transit Amenities Study	No Award	$309,855	$40,145	$350,000
2026-05	HCD	Round 10	Affordable Housing and Sustainable Communities Program (AHSC)	Round 10: Eden Housing	Pending	$6,665,555	$0	$6,665,555
2026-05	HCD	Round 10	Affordable Housing and Sustainable Communities Program (AHSC)	Round 10: Nattional CORE	Pending	$11,675,466		$11,675,466
2026-05	HCD	Round 10	Affordable Housing and Sustainable Communities Program (AHSC)	Round 10: Saint Vincent De Paul	Pending	$6,336,560		$6,336,560
2026-05	Caltrans	Round 8	Transit and Intercity Rail Capital Program (TIRCP)	Round 8: RISE Project	Pending	$69,525,000	$17,382,000	$86,907,000
2026-08	Caltrans	FFY2026	Section 5311 (f) Intercity Bus Program (MTS CIP FY27)	Operating and Payroll Assistance	Pending	$300,000	$242,201	$542,201
2026-09	FTA	FFY2026	Innovative Coordinated Access and Mobility (ICAM)	MTS Paratransit Vehicle Replacement Project	Pending	$998,282	$176,168	$1,174,450
2026-09	FTA	FF2026	FY26 Buses and Bus (5339b)Program	MTS's Regional Transit Management & Operations Software Systems Project	Pending	$2,100,000	$525,000	$2,625,000
2026-09	FTA	FF2026	FY26 Low/No (5339c) Program	Modernizing MTS Bus Facilities to Support Low-Emission Transit	Pending	$24,208,000	$6,051,000	$30,259,000
2026-10	FHWA	FF2026	FY24-26 PROTECT	MTS Facility Resiliency Planning Project	Pending	$1,000,000		$1,000,000
Total						**$154,534,960**	**$28,843,522**	**$182,973,261**

Strategic Partnerships and Competitive Grant Funding

- Affordable Housing and Sustainable Communities (AHSC) Program
  - Three (3) Awards attained during the Round 1 through Round 4 Cycles
    - Round 7 (2023): Riverwalk/Wakeland Development (San Diego): Award
    - Round 8 (2024): Alvarado Creek, Beyer – Casa Familiar (San Diego): Award
    - Round 9 (2025): Saint Vincent de Paul (San Diego): Award
    - Round 10 (2026): Saint Vincent de Paul, Palm City Transit Village (San Diego), Bayview Family Apartments (Chula Vista) – Pending – Award Announcements scheduled for December 2026
- Transformative Climate Communities Grant Program
  - San Diego Foundation & Environmental Health Coalition - Rooted in Comunidad, Cultivating Equity (RICCE) Project

Priority Projects Funded

Operating

- Operating Funds
  - ADA
  - Rural
  - Rail
- Safety and Security
  - K-9 Services
  - Replacement Radios
- TOD Partnerships
  - New Shelters
- Planning Studies
  - Service Area and Amenities Analysis

Capital

- Bus and Rail Preventive Maintenance
  - Buses
  - Rail
  - Facilities
- Bus/Rail Replacements
  - With exceeded useful life minimums of 12+years and 25+years
- State of Good Repair and/or Replacement Projects
  - Station Escalator's
  - Station HVAC
  - Substations along the rail network
  - Trackwork

Earmark Requests

Pending Final Approval:

- LRV Camera Modernization Project (Rep. Vargas)
  - Original request: $648,000; proposed allocation in FY27 THUD bill: $500,000
  - Project will replace and upgrade the existing OBVSS on 36 Light Rail Vehicles (LRVs) .
- MTS ADA Bus Stop Improvement Project (Rep. Jacobs)
  - Original request: $898,480; proposed allocation in FY27 THUD bill: $250,000
  - Planned improvements include upgraded sidewalks, accessible curb ramps, and safer boarding areas that comply with Americans with Disabilities Act (ADA) standards.
- MTS Facility Resiliency Planning Project (Rep. Peters)
  - Original request: $750,000; proposed allocation in FY27 THUD bill: $250,000
  - Project will evaluate and develop engineering and nature-based solutions that strengthen the safety, security, and resilience of the 12th & Imperial Transit Center.

Upcoming Requests:

- State District Budget Requests: Project proposals under development.
- Federal Community Project Funding Requests: Project proposals under development.

Note: Staff will be requesting applicable Board Member advocacy coordination and support to pursue upcoming State and Federal earmark funding.

Imperial Beach – New Iris Rapid Stops





Barrio Logan – New Shelters

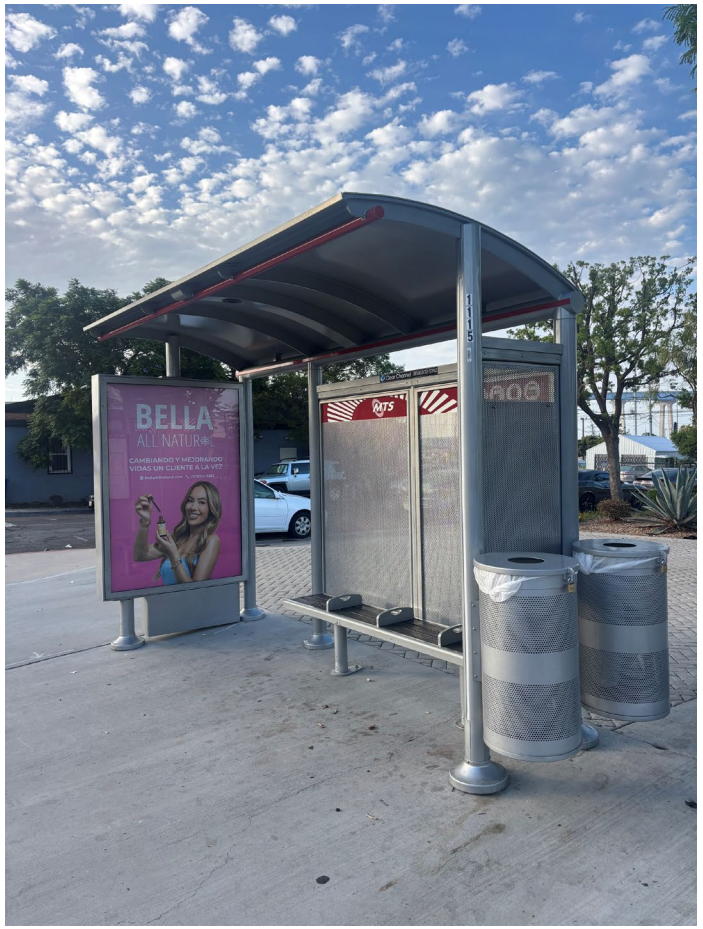



San Diego – America Plaza Pedestrian Enhancements





Operations: K-9



K-9 Aska (pictured): Retired
Sgt. Bautista now training new K-9 Nena



K-9 Apacs: retired early (CCI Glasson accepted new position outside MTS)



K-9 Chili: In-service with MTS

RwUpcoming Grant Applications

- PROTECT Grant (submitted Oct. 2026)
- Sustainable Communities Caltrans Planning Grant (Agency Partner)
- State/Federal Earmarks
- Resiliency Grants
- Apprenticeship Training Grant
- 5310 STGP Cycle 14

Questions/Comments

Metropolitan Transit System

Agenda Item No. 07

MEETING OF THE SAN DIEGO METROPOLITAN TRANSIT SYSTEM
JOINT AUDIT OVERSIGHT AND EXECUTIVE COMMITTEE

November 5, 2026

SUBJECT:

Preparation for El Niño Conditions (Brian Riley and Heather Furey)

INFORMATIONAL ONLY

Budget Impact

Staff created unique budget codes to track operating budget dollars spent on El Niño preparation. In total, $696,413.15 has been spent through October 29, 2026.

DISCUSSION:

El Niño is a climate pattern in the Pacific Ocean that can affect weather worldwide. The 2026–2027 El Niño is forecasted to be one of the strongest on record, prompting a local state of emergency from the City and County of San Diego. Rainfall is predicted to be heavier than previous years and the most impactful rains are projected between January and March 2027. The National Oceanic and Atmospheric Administration (NOAA) is recording historic high-water levels along the coast, with San Diego reaching 2.8 feet above average. With high water levels and significant rain in the forecast, MTS facilities around the 12th and Imperial Transit Center and throughout the San Diego region face an elevated threat of flooding and coastal erosion.

Staff will present a summary of short- and long-term efforts to reduce the risk of damage to MTS facilities due to heavy rain and flooding.

/s/ Sharon Cooney
Sharon Cooney
Chief Executive Officer

Key Staff Contact: Julia Tuer, 619.557.4515, Julia.Tuer@sdmts.com

San Diego Metropolitan Transit System (MTS) is a California public agency comprised of San Diego Transit Corp., San Diego Trolley, Inc. and San Diego and Arizona Eastern Railway Company (nonprofit public benefit corporations). MTS member agencies include the cities of Chula Vista, Coronado, El Cajon, Imperial Beach, La Mesa, Lemon Grove, National City, Poway, San Diego, Santee, and the County of San Diego. MTS is also the For-Hire Vehicle administrator for multiple cities in San Diego County.

Metropolitan Transit System

Preparation for El Niño Conditions

Executive Committee

Executive Summary

- **The January 2024 floods** caused approximately **$17 million dollars in damages** across three maintenance buildings and critical track sections on the Orange and Blue Lines. This framework serves as our proactive playbook to transform those lessons into active operational defenses, ensuring network reliability and personnel safety throughout the upcoming El Niño season

- **Facilities Impacted:** Floodwaters inundated three core maintenance and operations buildings, severely impacting administrative offices and vital fleet maintenance equipment.

- **Infrastructure Damage:** Major track and structural washouts occurred along the Orange and Blue Lines, requiring a massive expenditure of agency resources and extended timelines to fully restore service.

- **Root Cause Analysis:** Post-event inspections revealed that multiple municipal and right-of-way storm drain systems were completely clogged with debris and vegetation. This blocked optimal hydraulic flow, redirecting high-velocity runoff directly into MTS tracks, ballasts, and structural foundations.

January 2024 Storm Event

MTS Maintenance Buildings and Administrative Offices

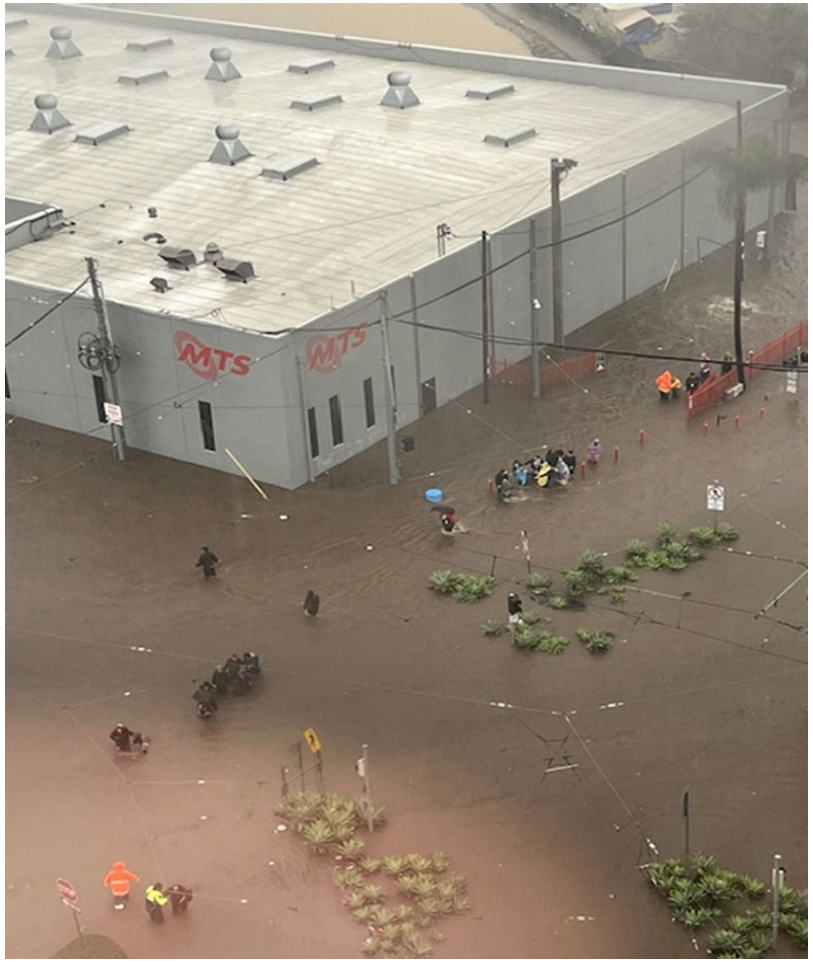

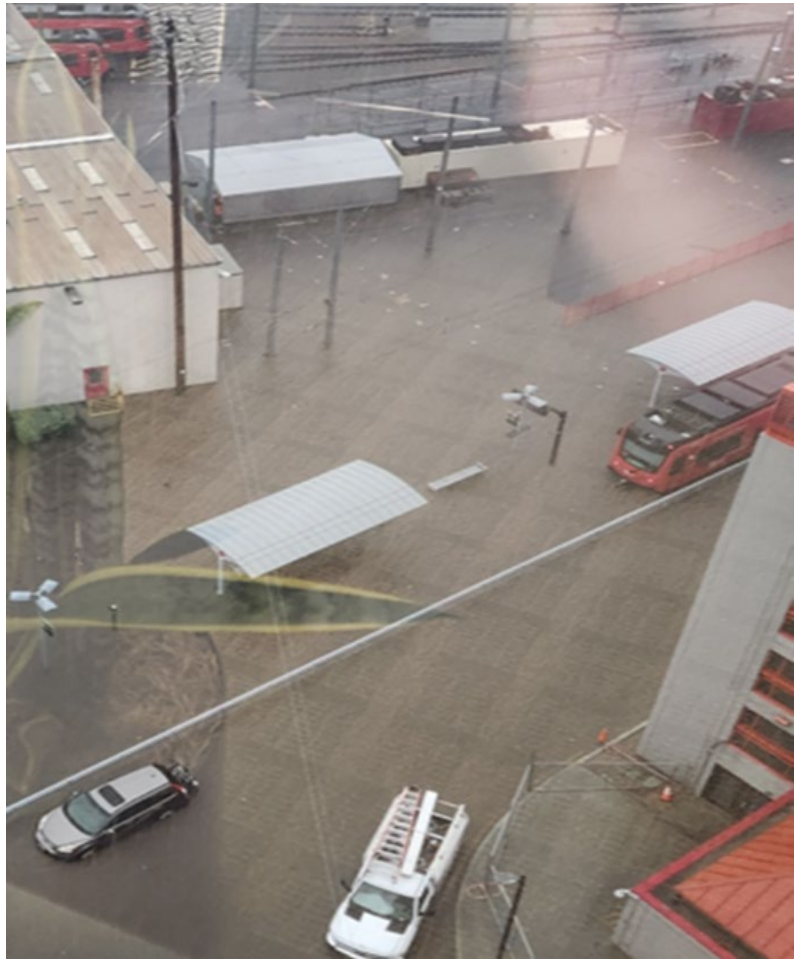



January 2024 Storm Event

Orange Line Track Structure Damage







El Niño Working Group Framework

- **Strategic Outcome:** Using these critical insights, the agency developed a comprehensive, proactive emergency playbook specifically designed to harden infrastructure, streamline agency communication, and prevent similar failures during future severe weather events.
- **MTS Rail Division Departments**
  - **Maintenance of Way (MOW)**: Focuses on track stability, structural integrity, and signaling/crossing system defenses.
  - **Transportation**: Manages operational responses, temporary routing, temporal separation logistics, and passenger transit continuity.
  - **Facilities**: Secures transit stations, building infrastructure, and core administrative and maintenance facilities (e.g., the Mills Building).
  - **Light Rail Vehicle (LRV) Maintenance**: Protects the rolling fleet, prevents electrical water damage to cars, and organizes fleet staging/relocations on elevated structures i.e., Mid Coast and Snap Dragon Stadium.
- **MTS Business Functions**
  - **Procurement**: Expedites emergency vendor contracts, material acquisitions, and critical storm-defense staging assets.
  - **Finance**: Tracks emergency disaster expenditures, manages damage budget allocations, and coordinates state/federal (Cal OES/FEMA) reimbursement documentation.
  - **Information Technology (IT)**: Ensures network resilience, maintains CCTV monitoring systems, and supports critical emergency communications infrastructure (e.g., employee mass text alert systems).

Operational Defense & Readiness

- **Employee Communication & Protection**

  - **Emergency Mass Notification:** Established a designated text messaging system to instantly alert all employees during high-risk flood windows. Alerts will direct personnel to utilize the secure Mills Building parking garage rather than vulnerable street parking on Newton Avenue and Commercial Street.
  - **Personal Protective Equipment (PPE):** Procured and staged heavy-duty, industrial-grade rain gear for all active deployment personnel across both Operations and Maintenance divisions.

Facility Defense & Restoration Readiness

- **Mitigation Barriers:** Procured and staged modular flood barriers to shield vulnerable MTS facilities, stations, and administrative infrastructure.
- **Restoration Logistics & Fleet Asset Deployment:** Secured dedicated restoration service agreements and acquired critical heavy equipment to rapidly clear, pump, and repair the network post-event:
  - *Water Removal Pumps:* Staged for rapid-response track and facility dewatering.
  - *Debris & ROW Clearing:* Chainsaws, dump trucks, loaders, and backhoes prepped for immediate line clearance.

External Alignments, Contingency Scaling & Contractor Assistance

- **Municipal & Community Alignment**
  - **City of San Diego Coordination:** Partnering with city crews to proactively clear regional flood channels and municipal storm systems of debris, ensuring maximum hydraulic flow capacity during heavy downpours.
  - **Right-of-Way (ROW) Clearing:** Completed joint debris-mitigation efforts with the Trail Park at 70th Street to clean and clear the shared storm channel running between the community and the MTS right-of-way.
  - **Stacy and Witbeck & Balfour Beatty:** Prime construction contractors on the Orange Line Phase 1 and 2 rehabilitation project. In the event of a severe storm, they are prepared to pivot their field crews and heavy machinery to support MTS emergency infrastructure restoration efforts.
  - Participated in **Supervisor Paloma Aguirre's** El Niño Emergency Preparedness Town Hall meeting
  - Participated in **Assembly Member Tasha Boerner's** virtual El Niño preparedness meeting

Proactive Flood Mitigation Execution

Storm System Cleaning

Grape Street

Before



After



Storm System Cleaning

70th Street

Before



After



Tree Removals

Alvarado

Before



After



Traction Power Substation Water Diversion

San Altos-Mass





Building Flood Barriers

Facility Hardening

Performance Example



MTS Procured Materials



Building Doors

Water Intrusion Mitigation





Building Doors

Water Intrusion Mitigation





Building Doors

Water Intrusion Mitigation





Longer Term Flood Prevention Efforts Underway

E. Beyer Road Slope Repair

Before



After



E. Beyer Road Slope Repair

Before



During



E. Beyer Road Slope Repair

During



Proposed

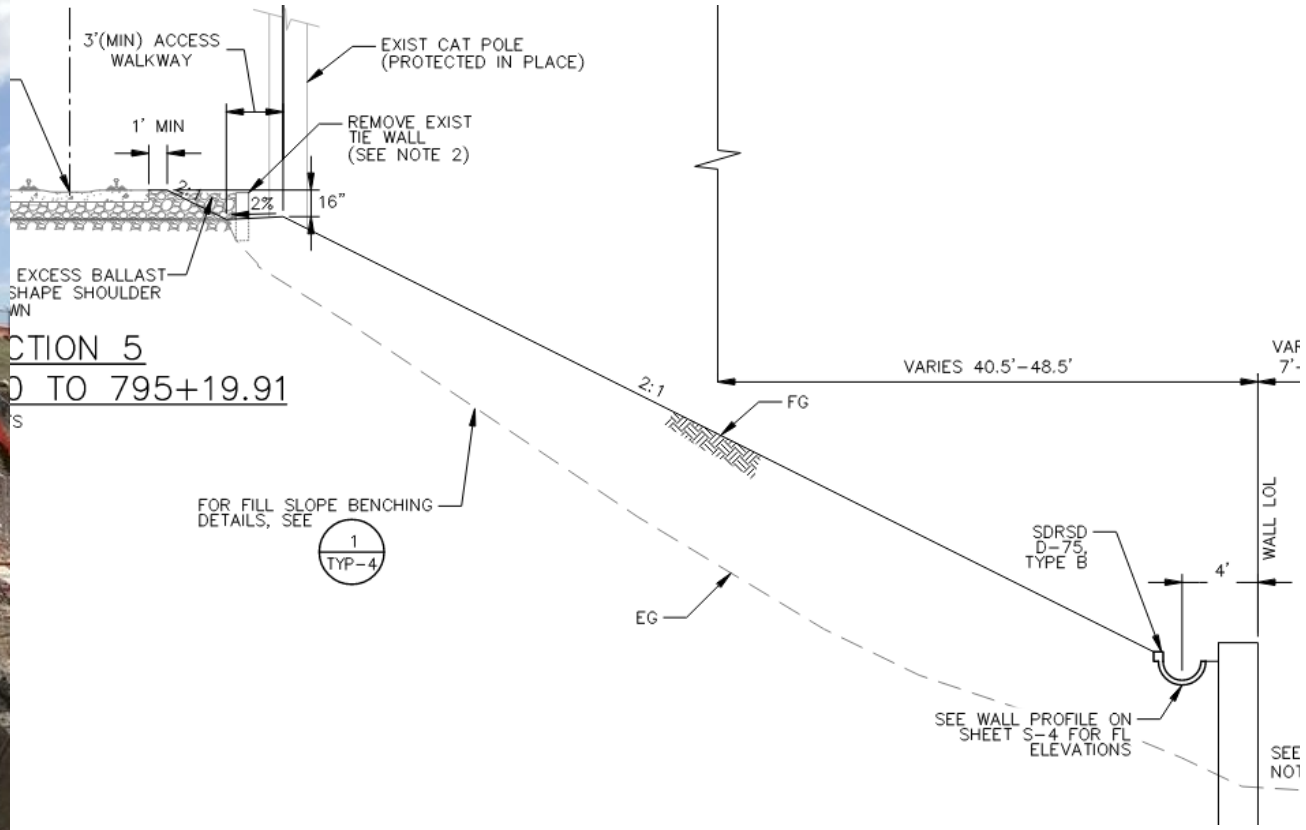

65th Street Retaining Wall

January 2024



October 2026



Fall 2027

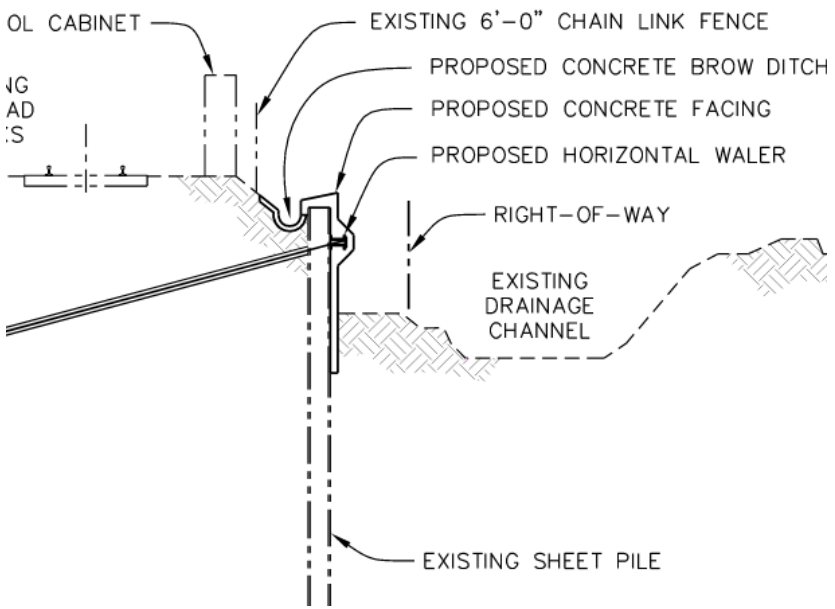

Broadway Wye Improvements



System-Wide Flood Plain Mapping

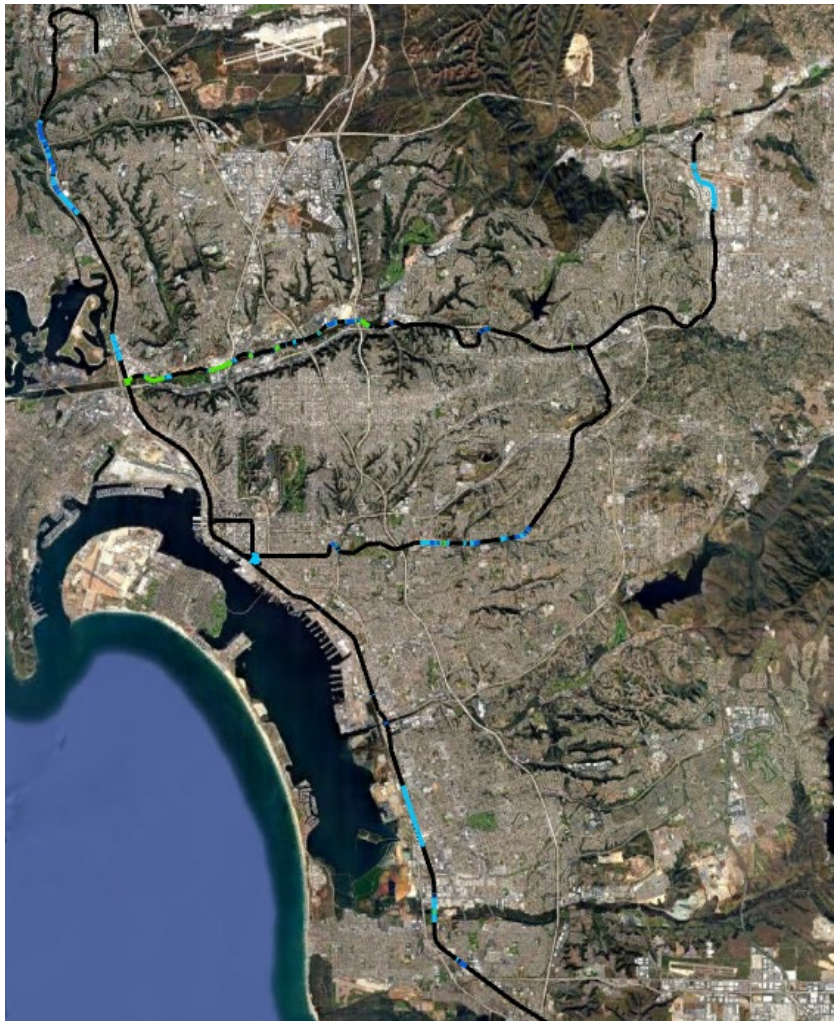

- **$1.5M budget in CIP for drainage improvements design**
- **Seeking grant funding** to study flood risk within Trolley Yard and 12th and Imperial Transit Center, current data gap in flood statistics due to influence of tides during rain events
- **Flood Risk Definitions**
  - **FP100 (100-Year Floodplain):** Represents a 1% annual chance of flood event.
  - **FP500 (500-Year Floodplain):** Represents a 0.2% annual chance of flood event.
  - **FW100 (100-Year Floodway):** This is the actual channel of a river or watercourse and the adjacent land areas that must be reserved to discharge the base flood.

Flood Risk	Length of Rail Segments in Miles	Percent of Total
FP100	7.2	5.3%
FP500	15.0	11.1%
FW100	4.8	3.5%
Outside Flood	108.3	80.1%

Questions/Comments

Metropolitan Transit System

Board of Directors

Agenda

November 19, 2026 at 9:00 a.m.

In-Person Participation: James R. Mills Building, 1255 Imperial Avenue, 10th Floor Board Room, San Diego CA 92101

Teleconference Participation: (669) 254-5252; Webinar ID: 160 280 5839, https://www.zoomgov.com/j/1602805839

NO.	ITEM SUBJECT AND DESCRIPTION	ACTION
1.	**Roll Call**	
2.	**Public Comments** This item is limited to five speakers with two minutes per speaker. Others will be heard after Board Discussion items. If you have a report to present, please give your copies to the Clerk of the Board.	
3.	**CEO Report**	Informational
CONSENT ITEMS		
4.	**Approval of Minutes** Action would approve the October 15, 2026 Board of Directors meeting minutes.	Approve
5.	**Administrative Services for Employee Benefits – Contract Amendment** Action would 1) Ratify the Chief Executive Officer's (CEO) approval of MTS Doc. No. G2506.0-21, with Navia Benefits Solutions, for Employee Benefits Administrative Services in the amount of $90,000.00; and 2) Ratify the CEO's approval of Amendment 1 to MTS Doc. No. G2506.0-21, with Navia Benefits Solutions, for additional funds in the amount of $55,700.40; and 3) Authorize the CEO to execute Amendment No. 2 to MTS Doc No. G2506.0-21, with Navia Benefit Solutions, to update fees beginning January 1, 2027, and to add contract capacity of $38,143.20.	Approve
6.	**Rail Safety Cloud Incident Management System (RS-CIMS) – Contract Award** Action would authorize the Chief Executive Officer (CEO) to: 1) Execute MTS Doc No. L1692.0-25, with Origami Risk LLC (Origami), to provide RS-CIMS Solution in the amount of $650,650.00 for a three (3) year base period with (2) two 1-year options, for a total of five (5) years; and 2) Exercise the option years at the CEO's discretion.	Approve

7. **Mid-Coast Variable Message Sign (VMS) Installation Project – Design Services – Work Order Agreement** — Approve

Action would authorize the Chief Executive Officer (CEO) to execute Work Order No. WOA355-AE-78, under MTS Doc. No. PWL355.0-22, with Psomas, in the amount of $236,669.82 to prepare Plans, Specifications, and Estimate (PS&E) for the Mid-Coast VMS Installation Project.

8. **Schley Grade Crossing Replacement – Job Order Contract (JOC) Work Order** — Approve

Action would authorize the Chief Executive Officer (CEO) to execute Job Order Contract No. MTSJOC456-01 under MTS Doc. PWL456.0-26, with Domestic Rail Solutions Corp. (DRS), in the amount of $757,865.79 for repair of the Schley Street grade crossing.

9. **Investment Report – Quarter Ending September 30, 2026** — Informational

10. **Adoption of the 2027 San Diego Metropolitan Transit System (MTS) Executive Committee and Board of Directors Meeting Schedule** — Approve

Action would adopt the 2027 Executive Committee and Board of Directors meeting schedule.

11. **Operations Budget Status Report for September 2026** — Informational

Agenda Item will be provided prior to Board Meeting.

DISCUSSION ITEMS

12. **Appointment of Ad Hoc Nominating Committee for Recommending Appointments to MTS Committees for 2027 (Sharon Cooney)** — Appoint

Agenda Item will be provided prior to Board Meeting.

13. **Audit Results and Draft of Fiscal Year (FY) 2026 Annual Comprehensive Financial Report (ACFR) (Erin Dunn and Jennifer Pentoney with Coley Delaney of The Pun Group)** — Informational

Agenda Item will be provided prior to Board Meeting.

14. **Fiscal Year (FY) 2026 Final Operating Budget Results (Gordon Meyer)** — Approve

Agenda Item will be provided prior to Board Meeting.

15. **MTS Economic Impact Study Results** — Informational

Agenda Item will be provided prior to Board Meeting.

OTHER ITEMS

16. **Chair, Board Member and Chief Executive Officer's (CEO's) Communications**

17. Remainder of Public Comments Not on The Agenda

This item is a continuation of item No. 2 (Public Comment), in the event all speakers who request to comment on item No. 2 are not called. If all Public Comment is accepted during item No. 2, no additional public comment will be accepted under this item.

18. Next Meeting Date

The next Board of Director's meeting is scheduled for December 17, 2026 at 9:00am.

ADJOURNMENT

19. Adjournment

Metropolitan Transit System

DRAFT FOR EXECUTIVE COMMITTEE REVIEW DATE: 11/5/2026

Agenda Item No. 05

MEETING OF THE SAN DIEGO METROPOLITAN TRANSIT SYSTEM
BOARD OF DIRECTORS

November 19, 2026

SUBJECT:

Administrative Services for Employee Benefits – Contract Amendment

RECOMMENDATION:

That the San Diego Metropolitan Transit System (MTS) Board of Directors:

1) Ratify the Chief Executive Officer's (CEO) approval of MTS Doc. No. G2506.0-21 (Attachment A), with Navia Benefits Solutions, for Employee Benefits Administrative Services in the amount of $90,000.00; and

2) Ratify the CEO's approval of Amendment 1 to MTS Doc. No. G2506.0-21 (Attachment B), with Navia Benefits Solutions, for additional funds in the amount of $55,700.40; and

3) Authorize the CEO to execute Amendment No. 2 to MTS Doc No. G2506.0-21 (in substantially the same format as Attachment A), with Navia Benefit Solutions, to update fees beginning January 1, 2027, and to add contract capacity of $38,143.20.

Budget Impact

The total cost of this amendment is estimated to be $38,143.20 and the total contract cost is estimated to be $183,843.60 ($145,700.40 current contract value plus $38,143.20 for Amendment No. 2). The project will be funded by the Fringe Benefits Operating Budget account 903010-523100 for Active Employees and Fringe Benefits Operating Budget account 903010-523300 for Retirees.

The contract costs are summarized below:

Description	Amount	Approval
Original Contract Value	$90,000.00	6/21/2021 Board Policy 41 *Today's Proposed Action (ratify)*
Amendment 1	$55,700.40	6/2/2025 Board Policy 41 *Today's Proposed Action (ratify)*
Amendment 2	$38,143.20	*Today's Proposed Action (approve)*
Total	$183,843.60	

DISCUSSION:

On July 25, 2019 (Agenda Item (AI) 14), the MTS Board of Directors awarded MTS Doc. No. G2233.0-19 for Employee Benefits Brokerage and Consulting Services to Alliant Insurance Services, Inc. effective December 1, 2019, for a term of three (3) base years with five (5) 1-year options.

Through a competitive selection process, Alliant Insurance Services, Inc. and MTS Staff identified Navia Benefit Solutions as the best overall value for a provider of health and welfare spending account administrative services for MTS. Alliant Insurance Services, Inc., performs an ongoing comprehensive review to ensure MTS continues to receive the best service and value. As a result, MTS entered into an open-ended agreement, MTS Doc. No. G2506.0-21 with Navia Benefit Solutions to administer the benefit plans listed below:

- Health Reimbursement Arrangement (HRA)
- Retiree Health Reimbursement Arrangement (RHRA)
- Flexible Spending Arrangement (FSA)

The administration of the benefit plans requires Monthly Processing and Administration Fees as outlined in MTS Doc. No. G2506.0-21.

Therefore, staff recommends that the MTS Board of Directors:

1) Ratify the CEO's approval of MTS Doc. No. G2506.0-21 (Attachment A), with Navia Benefits Solutions, for Employee Benefits Administrative Services in the amount of $90,000.00; and

2) Ratify the CEO's approval of Amendment 1 MTS Doc. No. G2506.1-21 (Attachment B), with Navia Benefits Solutions, for additional funds in the amount of $55,700.40; and

3) Authorize the CEO to execute Amendment No. 2 to MTS Doc No. G2506.0-21 (in substantially the same format as Attachment A), with Navia Benefit Solutions to update fees beginning January 1, 2027, and to add contract capacity of $38,143.20.

/s/ Sharon Cooney
Sharon Cooney
Chief Executive Officer

Key Staff Contact: Julia Tuer, 619.557.4515, Julia.Tuer@sdmts.com

Attachments: A. MTS Doc No. G2506.0-21
B. MTS Doc No. G2506.1-21
C. Draft MTS Doc No. G2506.2-21

NAVIA BENEFIT SOLUTIONS ADMINISTRATIVE SERVICES AGREEMENT (v. 2020)

CONTRACT INFORMATION PAGE

This NAVIA ADMINISTRATIVE SERVICES AGREEMENT ("Agreement") is entered into as of the Effective Date by and between Navia Benefit Solutions, Inc. ("Navia"), a Washington Corporation, and the below-named Employer ("Employer").

Name of Employer:	San Diego Metropolitan Transit System
Effective Date:	January 1st, 2021
Notices Sent to Employer:	1255 Imperial Avenue, Suite 1000 San Diego, CA 92101
Notices Sent to Navia	600 Naches Ave SW Renton, WA 98057

IN WITNESS WHEREOF, Employer and Navia have reviewed the forgoing Agreement in its entirety and have caused their undersigned Representative(s) to execute this Agreement, the same being duly authorized to do so.

EMPLOYER

SIGNATURE: _____

NAME: KAREN LANDERS

TITLE: GENERAL COUNSEL

DATE: 6-21-2021

NAVIA BENEFIT SOLUTIONS, INC.

SIGNATURE: _____

NAME: HILARIE AITKEN

TITLE: CEO

DATE: 6-24-2021

TABLE OF CONTENTS

Article I: Definitions 1
1.1 Affiliate 1
1.2 Agreement 1
1.3 Benefit Plans 1
1.4 Business Day 1
1.5 Card Recipient 1
1.6 Card Services Provider 1
1.7 Carrier 1
1.8 Claims Administrator 1
1.9 COBRA Election Notice 1
1.10 Code 2
1.11 Covered Dependent 2
1.12 Covered Employee 2
1.13 Covered Individual 2
1.14 Disbursement Report 2
1.15 Eligibility and Payroll Deduction Report ("EDR") 2
1.16 Electronic Payment Card 2
1.17 Eligible Employee 2
1.18 Exhibit 2
1.19 Fees 2
1.20 Grace Period 2
1.21 Intellectual Property Rights 2
1.22 Party or Parties 2
1.23 Plan Administrator 3
1.24 Plan Application 3
1.25 Plan Year 3
1.25 Plan Year 3
1.26 Representative 3
1.27 Run-Out-Period 3
1.28 Schedule 3
1.29 Services 3
1.30 Specific Rights Notice 3
1.31 Subcontractor 3

1.32 We or Us 3
1.33 You or Your 3
1.34 Year-to-Date Report 3

Article II. Relationship and Term 4
2.1 Relationship of the Parties 4
2.2 Term of the Agreement 4
2.3 Termination without Cause 4
2.4 Termination for Cause 4
2.5 Post Termination Obligations 4

Article III. Fees 5
3.1 Fees for Services 5
3.2 Fees for Additional Services 5
3.3 Fee Terms and Changes in Fees 5

Article IV Warranties and Representations 6
4.1 Mutual Warranties and Representations 6
4.2 Navia's Warranties and Representations 6
4.3 Employer's Warranties and Representations 6

Article V. Information and Records 6
5.1 Records Generally 6
5.2 Confidential and Proprietary Information - Generally 6
5.3 Media Releases and Public Announcements 7
5.4 Protected Health Information 8
5.5 Intellectual Property Rights 8
5.6 Online Services 8

Article VI. Liability and Indemnification 8
6.1 Limitation on Liability 8
6.2 Indemnity 9
6.3 Remedies 9
6.4 Statute of Limitations 10

Article VII Miscellaneous 10
7.1 Section Headings 10

7.2 Waiver of Rights 10
7.3 Invalid/Illegal/Unenforceable Provisions 10
7.4 Amendment 10
7.5 Agreement 10
7.6 Notices 11
7.7 Consent 11
7.8 Third Party Beneficiaries 11
7.9 Advertising 11
7.10 Insurance 11

BENEFIT PLAN SERVICE SCHEDULE(S) AND FEES 12

CAFETERIA PLAN SERVICE SCHEDULE 16

FLEXIBLE SPENDING ARRANGEMENT SCHEDULE 17

HEALTH REIMBURSEMENT ARRANGEMENT ("HRA") SCHEDULE 20

EXHIBIT A BUSINESS ASSOCIATE AGREEMENT 22

EXHIBIT B EMPLOYER CERTIFICATION 27

EXHIBIT C CALIFORNIA CONSUMER PRIVACY ACT DATA 29

NAVIA ADMINISTRATIVE SERVICE AGREEMENT

Employer has asked Navia to provide administrative services for certain employee Benefit Plans maintained by Employer as described in this Agreement. In consideration of the mutual promises contained in this Agreement, Employer and Navia agree as follows:

GENERAL TERMS AND CONDITIONS

ARTICLE I: DEFINITIONS

All capitalized terms in this Agreement not defined in this Section shall have the meanings set forth in the Sections or Schedules of this Agreement in which they are defined.

1.1 AFFILIATE

"Affiliate" means a business entity now or hereafter controlled by, controlling or under common control with a Party. Control exists when an entity owns or controls directly or indirectly 50% or more of the outstanding equity representing the right to vote for the election of directors or other managing authority of another entity.

1.2 AGREEMENT

"Agreement" means the following: the Contract Information Page, the General Terms and Conditions, the Schedules and the Exhibits that are specifically incorporated by the Parties into this Agreement by reference.

1.3 BENEFIT PLANS

"Benefit Plan(s)" means one or more employee benefits plans, 132 Transportation benefits, COBRA Administration, or Direct Billing Administration established and maintained by Employer for the benefit of its employees and their eligible dependents for which Navia provides Services in accordance with this Agreement.

1.4 BUSINESS DAY

"Business Day" means Monday through Friday, excluding days deemed to be federal holidays.

1.5 CARD RECIPIENT

"Card Recipient" means the individual to whom Card Services Provider issues an Electronic Payment Card in accordance with this Agreement.

1.6 CARD SERVICES PROVIDER

"Card Services Provider" means the third party chosen by Navia to issue Electronic Payment Cards in accordance with this Agreement and/or process electronic payment card transactions.

1.7 CARRIER

"Carrier" means the insurance Carrier or other benefit provider designated by the Employer.

1.8 CLAIMS ADMINISTRATOR

"Claims Administrator" means Navia.

1.9 COBRA ELECTION NOTICE

"COBRA Election Notice" means the election form included in the Specific Rights Notice.

1.10 CODE

"Code" means the Internal Revenue Code of 1986 and the regulations thereunder, as amended from time to time.

1.11 COVERED DEPENDENT

"Covered Dependent" means any person other than the Covered Employee who is covered under a Benefit Plan by virtue of his relationship to the Covered Employee.

1.12 COVERED EMPLOYEE

"Covered Employee" means any of Employer's employees or former employees who are enrolled in a Benefit Plan or who have established a Health Savings Account as defined in Code Section 223.

1.13 COVERED INDIVIDUAL

"Covered Individual" means a Covered Employee or a Covered Dependent.

1.14 DISBURSEMENT REPORT

"Disbursement Report" means a file or report created by Navia, posted to the Website that details the benefit disbursements.

1.15 ELIGIBILITY AND PAYROLL DEDUCTION REPORT ("EDR")

"Eligibility and Payroll Deduction Report" means a file or report created by Navia, posted to the Website, and verified by the Employer against payroll deductions for each processing date.

1.16 ELECTRONIC PAYMENT CARD

"Electronic Payment Card" means a debit card or store value card used to pay for eligible expenses under the Benefit Plan(s).

1.17 ELIGIBLE EMPLOYEE

"Eligible Employee" means an employee that is eligible for the Benefit Plan(s) as determined by the Employer.

1.18 EXHIBIT

"Exhibit" means the document or documents specifically incorporated by the Parties into this Agreement by reference that describe the specific rights, duties, and obligations of the Parties.

1.19 FEES

"Fees" means the amount that must be paid as indicated in each Schedule.

1.20 GRACE PERIOD

"Grace Period" means the 2.5-month period after the end of the Plan Year during which eligible expenses incurred during that time may be applied toward the previous Plan Year.

1.21 INTELLECTUAL PROPERTY RIGHTS

"Intellectual Property Rights" means all intellectual property rights throughout the world, including copyrights, patents, mask works, trademarks, service marks, trade secrets, inventions (whether or not patentable), know how, authors' rights, rights of attribution, and other proprietary rights and all applications and rights to apply for registration or protection of such rights.

1.22 PARTY OR PARTIES

"Party" means Employer or Navia collectively, and Employer and Navia shall be referred to as "Parties".

1.23 PLAN ADMINISTRATOR

"Plan Administrator" means Employer.

1.24 PLAN APPLICATION

"Plan Application" means the online or form questionnaire provided by Navia to Employer used to gather Employer and Plan design information.

1.25 PLAN DOCUMENT

"Plan Document" means a document that describes the Plan's terms and conditions related to the operation and administration of the plan.

1.26 PLAN YEAR

"Plan Year" means a period of time determined by the Employer no longer than 12 months.

1.27 REPRESENTATIVE

"Representative" means an officer, director, or individual with authority to bind the Party.

1.28 RUN-OUT-PERIOD

"Run-out Period" means the period of time after the end of the Plan Year during which Covered Individuals can submit claims.

1.29 SCHEDULE(S)

"Schedule(s)" means the document or documents specifically incorporated by the Parties into this Agreement by reference that describe the specific Services and the specific rights and obligations of the Parties with respect to such Services.

1.30 SERVICES

"Services" means Benefit Plan related administrative services as described specifically in the Schedules, together with any materials, supplies, tangible items or other goods Navia furnishes in connection with the Services.

1.31 SPECIFIC RIGHTS NOTICE

"Specific Rights Notice" means the notice that must be provided to each qualified beneficiary in connection with a COBRA qualifying event.

1.32 SUBCONTRACTOR

"Subcontractor" means a third-party to whom a Party has delegated or subcontracted any portion of its obligations set forth herein.

1.33 WE OR US

"We" or "Us" means Navia.

1.34 YOU OR YOUR

"You" or "your" means Employer.

1.35 YEAR-TO-DATE REPORT

"Year-to-Date Report" means a file or report created by Navia, posted to the Website that details contributions, disbursements, and benefit election, if applicable.

ARTICLE II. RELATIONSHIP AND TERM

2.1 RELATIONSHIP OF THE PARTIES

Navia is an independent contractor. Nothing in this Agreement or in the activities contemplated by the Parties hereunder shall be deemed to create an agency, partnership, employment, or joint venture relationship between the Parties, their Affiliates, or any of their Subcontractors or Representatives Employer acknowledges that Navia is not an accounting or law firm. No Services, and no written or oral communications made by Navia during the course of providing Services, are or should be construed by Employer as tax or legal advice.

2.2 TERM OF THE AGREEMENT

This Agreement shall be in effect from Effective Date set forth on the Contract Information Page and will continue until such time as the Agreement is terminated as set forth herein ("Term"). Each Schedule may have a later effective date than this Agreement to the extent that Employer and Navia agree to the terms set forth in the Schedule after this Agreement has already become effective. If the Employer uses the Services of Navia, this Agreement will be deemed to be in effect as of the date Navia begins providing such Services even if a copy of this Agreement has not been signed and returned by the Employer—all fees and monthly charges will be due and payable as set forth herein.

2.3 TERMINATION WITHOUT CAUSE

Either Party may terminate this Agreement for convenience, without cause, at any time without further charge or expense with at least sixty (60) calendar days prior written notice to the other Party.

2.4 TERMINATION FOR CAUSE

In addition to any other remedies available to a Party, a Party may immediately terminate this Agreement upon the occurrence of a Termination Event by the other Party by providing written notice of termination to the other Party.

The following events constitute a Termination Event:

(a) Employer fails to pay the applicable Fees or satisfy the applicable funding requirements as set forth herein;

(b) Failure of a Party to cure a material breach (to the extent curable) within thirty (30) calendar days after written notice of the breach and intent to terminate is provided by the non-breaching Party;

(c) Employer files for bankruptcy, becomes or is declared insolvent (generally unable to pay its debts as they become due), is the subject of any proceedings (not dismissed within 30 days) related to its liquidation, insolvency or the appointment of a receiver or similar officer, makes an assignment for the benefit of all or substantially all of its creditors, takes any corporate action for its winding-up, dissolution or administration, enters into an Agreement for the extension or readjustment of substantially all of its obligations, or recklessly or intentionally makes any material misstatement as to its financial condition. In the interest of risk reduction for both Parties, Navia may immediately suspend Benefit Plan processing (including debit cards) without notice upon the occurrence of any of the circumstances described in this section (c). Upon written notice to Employer, Navia may terminate services for a Covered Employee for persistent abusive, offensive, or similar behavior toward Navia employees.

2.5 POST TERMINATION OBLIGATIONS

(a) If Employer terminates this Agreement, Navia shall reasonably cooperate with Employer to transition information to Employer or a new third party pursuant to the reasonable instructions of

Employer, in accordance with the terms of this Agreement, as necessary to enable the new service provider to perform services without disruption to Covered Individuals. Employer is obligated to reimburse all reasonable costs and expenses incurred by Navia for continued administration during the transition process (including administration Fees during the claims run-out period) and transitioning any necessary information as set forth herein. Covered Individual claims submitted to Navia after termination of the Agreement or expiration of the claims run-out period, whichever is later, will be denied and Participants will be redirected to the Employer and Navia will have no further responsibility with respect to Covered Individual claims received after such time.

(b) The rights and obligations of the Parties that by their nature must survive termination or expiration of this Agreement in order to achieve its fundamental purposes include, without limitation, Section 5.1 through Section 5.5, Article VI, Section 7.7, and the Business Associate Agreement Exhibit.

(c) Termination of this Agreement shall not terminate the rights or obligations of either Party arising prior to the effective date of such termination. Notwithstanding anything to the contrary herein upon termination of this Agreement, all Fees, funding, and other amounts owed will become immediately due and payable.

ARTICLE III. FEES

3.1 FEES FOR SERVICES

The Fees that Employer must pay Navia for Services are set forth in the Fee section of each Schedule. To the extent that Navia sends a monthly invoice, all Fees are due upon receipt of the monthly invoice; however, there is a thirty (30) day period after which 1.5% interest per month will accrue with respect to any unpaid Fees to the extent Navia does not terminate the Agreement in accordance with Article III herein. If the invoice is mailed by Navia, the recipient is deemed to have received the invoice within three (3) Business Days after Navia mails the invoice. Failure to timely and completely pay such Fees may also result in suspension of all or part of the Services provided or, in Navia's discretion, termination of the Agreement.

3.2 FEES FOR ADDITIONAL SERVICES

Additional Fees for additional Services not listed in the Schedules shall be as mutually agreed in writing between Employer and Navia prior to performance. Such Fees may result from Employer's specific requests for legal guidance provided by an outside firm, development time, or third-party audit Fees.

3.3 FEE TERMS AND CHANGES IN FEES

(a) Fees are effective beginning with the Effective Date unless otherwise provided herein.

(b) Navia may change Fees to the extent that (i) changes are made in applicable law that materially affect the rights and obligations of Navia set forth herein, (ii) Employer amends the Benefit Plan in a manner that materially impacts the Services provided herein; or (iii) Navia provides written notice of a proposed Fee change to Employer. If Employer does not affirmatively reject any proposed Fee changes in writing within thirty (30) days of receiving written notice of the proposed Fee changes from Navia, such proposed Fees will become effective the first day of the month following the end of the thirty-day response period. If Employer does not agree with such proposed Fee changes, Employer may terminate the Agreement with no less than thirty (30) days prior written notice from the date that Navia notified Employer of the Fee changes.

ARTICLE IV. WARRANTIES AND REPRESENTATIONS

4.1 MUTUAL WARRANTIES AND REPRESENTATIONS

Each Party represents and warrants the following:

(a) the Party's execution, delivery and performance of this Agreement: (i) have been authorized by all necessary corporate action, (ii) do not violate the terms of any law, regulation, or court order to which such Party is subject or the terms of any material agreement to which the Party or any of its assets may be subject and (iii) are not subject to the consent or approval of any third party;

(b) This Agreement is the valid and binding obligation of the representing Party, enforceable against such Party in accordance with its terms;

(c) Such Party is not subject to any pending or threatened litigation or governmental action which could interfere with such Party's performance of its obligations hereunder; and

(d) Both Parties will perform their respective obligations under this Agreement in compliance with all laws, rules, regulations, and other legal requirements applicable to the Party.

4.2 NAVIA'S WARRANTIES AND REPRESENTATIONS

(a) Navia represents and warrants that the Services shall reasonably conform to the Schedules described herein.

(b) Other than as specifically set forth herein, Navia makes no representation or warranty, express or implied, written or oral, and, to the full extent permitted by law, disclaims all other warranties including, but not limited to, the implied warranties of merchantability or fitness for a particular purpose.

4.3 EMPLOYER'S WARRANTIES AND REPRESENTATIONS

Employer represents and warrants they are not subject to any pending or threatened litigation, governmental action, or investigation from the IRS, DOL, HHS, or otherwise with respect to any Benefit Plans. If Employer is subject to any litigation, action, or investigation, or becomes subject while this Agreement is in effect, Employer shall promptly notify Navia in writing in advance of the Effective Date of this agreement, or within 10 days of Employer becoming aware of such litigation, action, or investigation.

ARTICLE V: INFORMATION AND RECORDS

5.1 RECORDS GENERALLY

Employer and Navia shall retain records and supporting documentation sufficient to document its satisfaction of its obligations under this Agreement in accordance with laws and generally accepted accounting principles for at least eight (8) years from the date such record or documentation is created.

5.2 CONFIDENTIAL AND PROPRIETARY INFORMATION - GENERALLY

(a) Subject to the California Public Records Act, the term "Confidential Information" shall mean this Agreement and all non-public data, trade secrets, and proprietary business information that a Party ("Discloser") discloses, in writing, orally, visually or in any other medium, to the other Party ("Recipient") or to which Recipient obtains access and that relates to Discloser or, in the case of Navia, its customers. A "writing" shall include an electronic transfer of information by e-mail, over

the Internet or otherwise. Confidential Information shall not include Benefit Plan information (i.e. card swipe data, Benefit Plan reports, claims, explanation of benefits and other Protected Health Information). Such information will be protected under the Health Insurance Portability and Accountability Act of 1996 ("HIPAA") Health Information Technology for Economic and Clinical Health Act (HITECH"), and/or other applicable privacy and security laws.

(b) Each of the Parties, as Recipient, hereby agrees that it will not, and will cause its Representatives, Affiliates, vendors, Subcontractors, and third-parties not to disclose Confidential Information of the other Party, during or after the Term of this Agreement, other than for business reasons or as required by any applicable laws allowing the public access to the records of government agencies, and then only for the purposes of providing, enhancing, optimizing, or auditing the Services or to satisfy a legal or contractual requirement. Navia acknowledges that Employer is a government agency subject to the California Public Records Act and under that law, any member of the public can request and obtain from Employer copies of this agreement and/or any correspondence between Employer and Navia that is not protected by HIPAA or other privacy laws.

(c) Recipient shall not use or disclose Confidential Information of the other Party for any purpose other than to carry out its obligations set forth herein.

(d) Recipient shall treat Confidential Information of the other Party with no less care than it employs for its own Confidential Information of a similar nature that it does not wish to disclose, publish, or disseminate, but not less than a reasonable level of care.

(e) Upon the Discloser's written request following expiration or termination of this Agreement for any reason, the Recipient shall promptly return or destroy all Confidential Information in the possession of Recipient or Recipient's Representatives, Affiliates, vendors, Subcontractors, and third-parties, provided that either Party may retain copies of such files as needed to administer the Benefit Plan(s) or to protect its interests. If it is determined that returning or destroying all Confidential Information of Employer is infeasible Navia shall extend the protections of this Agreement to such Confidential Information.

(f) The obligations of confidentiality in this Section shall not apply to any information that (i) Recipient rightfully has in its possession when disclosed to it, free of obligation to Discloser to maintain its confidentiality; (ii) Recipient independently develops without access to Discloser's Confidential Information; (iii) is or becomes known to the public other than by breach of this Section or (iv) is rightfully received by Recipient from a third party without the obligation of confidentiality. Any combination of Confidential Information disclosed with information not so classified shall not be deemed to be within one of the foregoing exclusions merely because individual portions of such combination are free of any confidentiality obligation or are separately known in the public domain.

(g) A Party's Confidential Information and any results of processing Confidential Information or derived in any way therefrom shall at all times remain the property of that Party.

5.3 MEDIA RELEASES AND PUBLIC ANNOUNCEMENTS

Employer may not issue any media releases relating to this Agreement provided that nothing in this paragraph shall restrict any disclosure required by legal, accounting or regulatory requirements beyond the reasonable control of the releasing Party.

5.4 PROTECTED HEALTH INFORMATION

Protected Health Information ("PHI"), as defined by 45 C.F.R. 160.103, if any, that is used or disclosed by the Parties in accordance with this Agreement, will be governed by the terms and conditions set forth in the Business Associate Agreement between the Parties. Employer agrees that Navia may communicate confidential, PHI or otherwise sensitive information to Employer and hold Navia harmless in the event Employer misroutes or improperly uses or discloses such information where such information was used or disclosed by Navia for purposes of administration of the Benefit Plan(s) or used or disclosed for the purposes of carrying out Navia's duties and responsibilities under this Agreement.

5.5 INTELLECTUAL PROPERTY RIGHTS

Each Party shall retain all rights in and/or title to its respective Intellectual Property Rights. Other than as expressly provided in this Agreement, (a) nothing contained herein shall be construed as granting a Party any license, right, title, or interest in or to any of other Party's Intellectual Property Rights and (b) neither Party is developing any work product for the other.

5.6 ONLINE SERVICES

(a) Navia may provide access to a password-protected website maintained by Navia or Navia's Subcontractor(s) in connection with the Services (the "Website"). Navia may unilaterally make reasonable adjustments and improvements to the Website at any time and without prior notice. Neither Navia nor Navia's Subcontractor is under any obligation to make any adjustments to the Website that are requested by Employer or any other third party.

(b) The Website may include information related to Navia's other services and/or links to other websites to the extent permitted by law. Navia neither grants a license for nor is responsible for any external links to third party websites provided on the Website.

(c) Employer acknowledges that Employer and the Covered Individuals are solely responsible for maintaining the hardware and/or software necessary to access the Website. Individuals shall be directed to Navia's online Privacy Policy, Privacy Notice, and Terms and Conditions regarding consent for collection, use, retention, disclosure, and disposal of information.

ARTICLE VI: LIABILITY AND INDEMNIFICATION

6.1 LIMITATION ON LIABILITY

(a) NEITHER PARTY SHALL BE LIABLE TO THE OTHER FOR ANY SPECIAL, INDIRECT, INCIDENTAL, CONSEQUENTIAL, PUNITIVE OR EXEMPLARY DAMAGES, INCLUDING, BUT NOT LIMITED TO, LOST PROFITS, LOSS OF DATA, OR COST OF SUBSTITUTE SERVICES ARISING OUT OF OR IN CONNECTION WITH THIS AGREEMENT OR THE SERVICES PERFORMED HEREUNDER UNDER ANY THEORY OF LIABILITY EVEN IF SUCH PARTY ALLEGED TO BE LIABLE HAS KNOWLEDGE OF THE POSSIBILITY OF SUCH DAMAGES, PROVIDED, HOWEVER, THAT THE LIMITATIONS SET FORTH IN THIS SECTION SHALL NOT APPLY TO OR IN ANY WAY LIMIT THE OBLIGATIONS OF THE SECTIONS ENTITLED "INDEMNITY," AND "CONFIDENTIALITY AND PROPRIETARY INFORMATION". IF NAVIA IS FOUND LIABLE TO EMPLOYER FOR ANY DIRECT DAMAGES, SUCH DAMAGES SHALL NOT EXCEED AN AMOUNT EQUAL TO ACTUAL DAMAGES OR FOUR TIMES THE FEES PAID FOR SERVICES GIVING RISE TO THE CLAIM WITHIN THE TWELVE (12) MONTHS PRECEDING THE CLAIM, WHICHEVER IS LESS.

(b) Navia is not liable for the acts or omissions of a prior administrator or the acts or omissions of Employer if prior administration was conducted by Employer.

(c) Navia shall not be liable for any action, conduct, or activity taken by Navia, or any failure to act, at the request of Employer.

(d) Neither party will be liable for and will be excused from any failure or delay in satisfying its obligations set forth herein if such failure or delay is caused by circumstances beyond its control, including but not limited to any natural disaster (such as earthquakes, hurricanes or floods), emergency conditions (such as war, riot, fire, theft, severe inclement weather, or labor dispute), outages, legal constraint or governmental action or inaction, breakdown or failure of equipment not due directly to the negligence of the Party maintaining the equipment, or the act, omission, negligence or fault of the other party. This section does not excuse Employer from its obligations to pay any of the Fees or to fund the Benefit Plans as provided herein.

Navia neither assumes nor underwrites any liability of Employer under the Benefit Plans, and acts only as provider of the services specifically described herein. Navia shall not be responsible for any over disbursed benefits, including but not limited to over disbursements due to insurance claim adjustments after benefits have been reimbursed. The Services performed shall be ministerial in nature and shall be performed in accordance with the direction, guidance, framework, and interpretation of the Benefit Plan(s) established and communicated by Employer. Navia shall have no discretionary authority or control over the Benefit Plan(s), funds, and Covered Individuals. Specifically, the Employer has the absolute authority with respect to the control, management, investment, or disposition and utilization of all plan assets, if any; and Navia shall neither have nor be deemed to exercise any discretion, control, or authority with respect to the disposition of any plan assets.

6.2 INDEMNITY

(a) Each Party ("Indemnitor") shall indemnify, defend, and hold harmless the other Party, its Representatives, successors and permitted assigns (collectively, the "Indemnitee") from and against any and all claims made or threatened by any third party and all related losses, expenses, damages, costs and liabilities, including reasonable attorneys' Fees and expenses incurred in investigation or defense ("Damages"), to the extent such Damages arise out of or relate to the following:

i. Any negligent act or omission or willful misconduct by an Indemnitor, its Representatives or its Subcontractor; or

ii. Any material breach in a representation, covenant, or obligation of the Indemnitor contained in this Agreement.

(b) Indemnitee shall give Indemnitor reasonably prompt notice of, and the Parties shall cooperate in, the defense of any such claim, suit or proceeding, including appeals, negotiations and any settlement or compromise thereof, provided that Indemnitee must approve the terms of any settlement or compromise that may impose any un-indemnified or nonmonetary liability on Indemnitee.

(c) Navia shall not be liable to Employer for mistakes of judgment or other actions taken in good faith unless such error results directly from an intentionally wrongful or grossly negligent act of Navia.

6.3 REMEDIES

The remedies under this Agreement shall be cumulative and are not exclusive. Election of one remedy shall not preclude pursuit of other remedies available under this Agreement or at law or in equity.

6.4 STATUTE OF LIMITATIONS

The Parties agree that no legal action may be brought by a Party ("Plaintiff") against the other more than two (2) years after the date the claim giving rise to such action became known by the Plaintiff or, exercising reasonable diligence should have been known by the Plaintiff.

ARTICLE VII: MISCELLANEOUS

7.1 SECTION HEADINGS

Section headings are included for convenience or reference only and are not intended to define or limit the scope of any provision of this Agreement and should not be used to construe or interpret this Agreement.

7.2 WAIVER OF RIGHTS

No delay, failure, or waiver of either Party's exercise or partial exercise of any right or remedy under this Agreement shall operate to limit, impair, preclude, cancel, waive, or otherwise affect such right or remedy. Any waiver by either Party of any provision of this Agreement shall not imply a subsequent waiver of that or any other provision of this Agreement.

7.3 INVALID/ILLEGAL/UNENFORCEABLE PROVISIONS

If any provision of this Agreement is held invalid, illegal, or unenforceable, the validity, legality, or enforceability of the remaining provisions shall in no way be affected or impaired thereby.

7.4 AMENDMENT

Except as otherwise set forth herein, no amendments of any provision of this Agreement shall be valid unless made by an instrument in writing signed by both Parties specifically referencing this Agreement.

7.5 AGREEMENT

(a) This Agreement, the Schedules, and any Exhibits reflect the final, full and exclusive expression of the agreement of the Parties and supersedes all prior agreements, understandings, writings, proposals, representations and communications, oral or written, of either Party with respect to the subject matter hereof and the transactions contemplated hereby.

(b) This Agreement may be executed by the Parties in one or more counterparts, and each of which when so executed shall be an original but all such counterparts shall constitute one and the same instrument. The Parties agree to accept a digital image of this Agreement, as executed, as a true and correct original and admissible as best evidence to the extent permitted by a court with proper jurisdiction

(c) Notwithstanding the general rules of construction, both Employer and Navia acknowledge that both Parties were given an equal opportunity to negotiate the terms and conditions contained in this Agreement and agree that the identity of the drafter of this Agreement is not relevant to any interpretation of the terms and conditions of this Agreement.

(d) This Agreement shall be governed by the applicable laws of California without regard to any of its conflict of law principles and any dispute arising out of this Agreement will be settled in any court of competent jurisdiction in San Diego, California.

7.6 NOTICES

(a) All legal notices required to be sent by one Party to the other Party under this Agreement shall be given to the Parties in writing to the addresses identified on the Contract Information Page or to

such other addresses as the Parties may substitute by written notice given in the manner prescribed in this Section as follows:

i. By first class, registered or certified United States mail, return receipt requested and postage prepaid,

ii. Over-night express courier,

iii. By hand delivery to such addresses, or

iv. Electronic mail with return receipt.

(b) Such notices shall be deemed to have been duly given (i) five (5) Business Days after the date of mailing as described above, (ii) one (1) Business Day after being received by an express courier during business hours, or (iii) the same day if by hand delivery or by email

7.7 CONSENT

Wherever this Agreement requires either Party's approval or consent such approval or consent shall not be unreasonably withheld or delayed.

7.8 THIRD PARTY BENEFICIARIES

Except as expressly set forth in this Agreement, the Parties do not intend the benefits of this Agreement to inure to any third party, including but not limited to Covered Individuals and Eligible Employees, and nothing contained herein shall be construed as creating any right, claim or cause of action in favor of any such other third party, against either of the Parties hereto.

7.9 ADVERTISING

Navia may indicate in its marketing materials and proposals to other prospective customers that this Agreement has been awarded and may describe the nature and objective(s) of this engagement. No such statements by, or materials of, Navia will disclose any Employer Confidential Information.

7.10 INSURANCE

Navia agrees throughout the term of the Agreement to maintain in full force and effect commercial general liability, umbrella liability, error and omissions liability, crime/fraud, cyber liability, and professional liability insurance coverage in a reasonable amount, and workers' compensation insurance in the amount required by law, at its own expense. Upon request, Navia shall furnish to Employer a certificate of insurance evidencing the same.

BENEFIT PLAN SERVICE SCHEDULE(S) AND FEES

Employer has established one or more of the following Benefit Plans (the "Plan" or "Plans") for purposes of providing benefits administration and/or reimbursement of certain eligible expenses incurred by Covered Individuals:

- Cafeteria Plan Document and Forms
- Health and Dependent Care Flexible Spending Arrangements
- Health Reimbursement Arrangements
- Section 132 Transportation and Parking Plan
- Code Section 223 Health Savings Account

In addition, Employer may offer one or more of the following other Plans for purposes of complying with applicable laws or providing additional benefits.

- Wellness Plan
- Federal COBRA Administration
- Direct Billing or Direct Billing Administration

Employer has asked Navia to assist it with its administrative obligations under one or more of the Plans identified above. The specific Plan-related Services are described in each Schedule. Only those Services chosen by Employer pursuant to an Application and for which the applicable Fee is paid as set forth in the Fee section of each Schedule (or, as set forth below with respect to additional requested Services), will be provided by Navia.

ARTICLE I. STANDARD BENEFIT PLAN SERVICES

1.1. Employer is solely responsible for the operation and maintenance of the Plans. It is Employer's sole responsibility and duty to ensure that each Plan complies with the applicable laws and regulations, and Navia's provision of Services under this Agreement does not relieve Employer of this obligation.

1.2. If applicable to the particular Plan, Navia will provide Navia's standard plan document, summary plan description, and forms to be used by Employer as a template for creating the governing documents for the Plan(s). Such standard documents and forms have been prepared in accordance with the standard of care set forth in the Agreement but are general in nature and do not take into consideration facts and circumstances specific to Employer and Employer's Plans. Consequently, Navia makes no warranties and representations that such documents and forms will comply with applicable law as they relate to the Plan(s). Navia is not responsible for making any changes or amending the documents. It is Employer's responsibility to review the documents and ensure they conform to the facts and circumstances specific to Employer and the Plans, and ensure the documents comply with applicable laws. Employer shall also make such documents available to Covered Individuals as required by law.

1.3. Employer will provide to Navia timely, accurate and complete information relating to the Covered Individuals and the Plans as is necessary for Navia to satisfy its obligations hereunder. Employer shall provide information in the format and method approved by Navia (consolidated spec file) In the event such information (i.e. data reports and files) requires manual processing or requires a method not in Navia's business process, such processing shall be subject to Fees (Noncompliant File Processing Fee) as provided in the applicable Schedule. In the event that the information is not timely reported or verified, and in the event that there are disbursements made by Navia that

would not have been made if the occurrence had been reported on the same day of each such occurrence, then Employer shall be responsible for such disbursements and shall reimburse Navia therefore upon request by Navia. Employer shall be responsible for accurate Participant payroll deductions, reporting of deductions, and W-2 reporting and shall ensure that any terminated employer contacts (human resources, payroll, broker contacts, or other Employer contacts with access to the Website) are immediately reported to Navia on the same day of the occurrence. Employer shall be responsible for any consequences of failing to report such terminations on the same day of the occurrence, including by not limited to the unauthorized disclosure of information to former Employer contacts. Navia is not "a person" who is responsible for administering or providing benefits under the COBRA benefit within the meaning of Internal Revenue Code section 4980B (e)(1)(B). Navia is not responsible for the payment of excise taxes imposed under Internal Revenue Code section 4980B and is not responsible for the preparation or filing of Internal Revenue Service Form 8928. Navia shall provide such information as Employer reasonably requests in order to calculate excise taxes imposed under Internal Revenue Code section 4980B or to prepare IRS Form 8928. With respect to COBRA services, Navia is merely a collection agent for the employer and any amounts collected belong to the Employer. Employer agrees to reimburse Navia for any taxes, or other similar charges, in connection with COBRA administration, assessed against Navia. Employer understands and agrees that Navia may rely on all information provided to it by Covered Individuals and/or Employer in accordance with this Agreement as true and accurate without further verification or investigation by Navia. Navia shall not be responsible and shall be held harmless for the receipt of inaccurate and/or incomplete information or data files. Navia shall not be responsible for any delays in providing services under this Agreement and any financial or adverse consequences due to the receipt of the inaccurate and/or incomplete information or data files or for Employer's failure to send data files.

1.4 If applicable to the Plan(s), Navia will send education and engagement materials in the form of electronic mail campaigns direct to Employees and make enrollment kits (describing the benefit), enrollment forms, online enrollment specification files, and claim forms available on the Website and/or to Employer for distribution to Covered Individuals. Navia is only obligated to process claims submitted to Navia in accordance with the instructions set forth on Navia's claim forms. Navia will process claims in accordance with applicable law, its standard operating procedures, and the terms of the Plan to the extent that such terms are provided to Navia and are consistent with Navia's standard operating procedures. Navia may also provide claims submission capabilities via online and through a smart phone application for certain Plans. If Navia denies a request for reimbursement, Navia will review the 1st level appeal. If the Plan provides for 2 levels of appeal Employer will be responsible for the final determination. Employer shall be the fiduciary and Plan Administrator of the Benefits Plans and shall be responsible for interpreting the Plans, its provisions, terms and conditions and make any and all determinations as to eligibility, appeal, and change in status events, as applicable.

1.5 In the event that a Covered Employee is reimbursed less than is otherwise required by the Plans, Navia will promptly adjust the underpayment to the extent that Employer has satisfied its funding obligations as set forth herein. If it is discovered that a Covered Employee was overpaid, or the Covered Employee fails to substantiate an Electronic Payment Card Transaction as required by applicable rules and regulations, Navia will make reasonable attempts to request repayment of overpaid or unsubstantiated Electronic Payment Card claims or offset the ineligible payment against any claims for future eligible expenses in accordance with applicable rules and regulations. If the Covered Employee fails to repay or offset, Navia will notify Employer upon Employer's written request for such report or data. Employer is responsible for taking any additional action permitted or required by law (e.g., including such amounts in income or garnishing wages consistent with applicable laws). Navia shall have no obligation to request repayment or offset to

the extent such overpayment is a result of Employer's acts or omissions, such payments were authorized by Employer or Employer has failed to satisfy its funding obligations.

1.6 The specific funding requirements are set forth in each Schedule. Generally, Employer shall make sufficient employer funds from its general assets available to pay benefits under the Plan(s). These employer funds shall not be deemed employee salary reductions or plan assets. Employer shall grant Navia withdrawal authority over the account sufficient to enable it to pay benefits. If at any time the amount of benefits payable under the Plan exceeds the amount received Employer shall transfer an amount necessary to fulfill its funding obligations under the applicable Plan(s). Navia will deposit these Employer funds into a separate account to facilitate the payment of claims. Any interest generated by Employer funds deposited into separate account shall belong to Navia as reasonable compensation under this Agreement. Navia may use such interest for any legal purpose including, but not limited to, to offset any fees of the financial institution with respect to such account. To the extent that such interest (after deducting applicable fees) is not in excess of LIBOR plus 2-percent, Navia shall be entitled to retain such interest. Navia will return interest in excess of these permissible amounts to the Employer and the Employer agrees that it will use such amounts in accordance with applicable laws, including but not limited to ERISA when applicable.

Navia may suspend processing all benefit payments, electronic payment cards, and any other reimbursements, and distributions in the event Employer fails make sufficient funds available to pay benefits under the Plan(s) and/or fails to fund the Plan(s) according to the relevant Schedule. Navia shall not be responsible or liable for the funding of claims for benefits under any Plan. If at any time Navia has paid out more in benefits than received in funding (based upon either individual Covered Employee accounts or the Plan(s) aggregate balance) Employer shall deliver to Navia an amount equal to that deficit upon Navia's written request. If such funding is not received within two (2) days Navia may suspend all Services including but not limited to suspension of Electronic Payment Cards and benefit reimbursements.

1.7 If relevant to the Plan(s), Navia shall provide on-site enrollment meetings and attendance at benefits fairs, as reasonably requested by Employer, for the Fee and costs set forth in the Schedule.

1.8 Navia shall provide customer support weekdays, 5 a.m. to 5 p.m. Pacific Time, excluding holidays.

1.9 Navia will conduct Nondiscrimination Testing ("NDT") required under the Code for the attached Schedules. Navia will provide Employer with a Request for Information ("RFI") form requesting the data necessary to complete the NDT or provide an online version of the RFI. Within a reasonable amount of time after receipt of the requested information, Navia will provide test results, which will be based solely on the information provided by Employer and/or information maintained by Navia in accordance with the Schedule. Such test results are not intended as legal or tax advice and shall not be relied upon as legal or tax advice. Navia is under no obligation to advise Employer regarding specific corrective measures beyond providing the test results.

1.10 Employer may review reports summarizing the Plan via the Website. Employer is responsible for reviewing the reports submitted by Navia and notifying Navia of any errors of which it is aware within a reasonable period of time after reviewing them.

ARTICLE II. ELECTRONIC PAYMENT CARD SERVICES

2.1. If applicable to the Plan(s) selected in the attached Schedule(s), at Employer's request and payment of all applicable Fees, the Card Services Provider may make an Electronic Payment Card available to Covered Individuals through which eligible expenses may be paid in accordance with the following terms:

2.2. Covered Employees or Employer shall provide to Navia a valid email address for each Covered Employee requesting an Electronic Payment Card.

2.2.1. The Card Services Provider will issue an Electronic Payment Card to each Card Recipient within thirty (30) days of Navia's receipt of the Covered Employee's enrollment data or the Covered Employee's online, electronic mail or form request. Employer understands and acknowledges that the Card Services Provider issues Electronic Payment Cards based solely on the information provided by Employer. Navia and the Card Services Provider have no obligation to verify or confirm that Card Recipients are Covered Individuals.

2.2.2. Card Recipients must agree to use the Electronic Payment Card in accordance with the terms of the Cardholder Agreement that accompanies the Electronic Payment Card. The Electronic Payment Card will be deactivated if the Covered Individual fails to use the Electronic Payment Card in accordance with the Cardholder Agreement or as otherwise required by applicable law.

2.2.3. The Electronic Payment Card may be used by Card Recipients to pay for eligible expenses (as defined by applicable law and the applicable Plan to the extent consistent with Navia's standard operating procedures) in accordance with the applicable rules and regulations.

2.2.4. Navia will require substantiation of expenses paid with the Electronic Payment Card in accordance with the requirements set forth in the Code and/or other applicable guidance. The Electronic Payment Card will be deactivated if the Card Recipient fails to provide the requested substantiation in a timely manner as determined by Navia in accordance with Federal guidelines.

2.2.5. All Cards will be deactivated on the date this Agreement is terminated, the date that Employer fails to satisfy its funding obligations as set forth herein, the date Employer files for bankruptcy and/or as necessary to prevent fraud or abuse (as determined by Navia).

CAFETERIA PLAN SERVICE SCHEDULE

Employer has established a Code Section 125 Plan to allow eligible employees to pay for their share of certain Benefit Plan coverage with pre-tax salary reductions (including but not limited to Employer contributions).

This Schedule is incorporated into and made a part of the Agreement. The responsibilities of the Parties set forth in this Schedule are in addition to any responsibilities set forth in the Agreement. If there is a conflict between this Schedule and any other part of the Agreement with respect to the subject matter of this Schedule, the Schedule will control. In all other conflicts, the Agreement controls. Capitalized terms not otherwise defined herein are defined as set forth in the Agreement.

ARTICLE I. STANDARD SERVICES

1. Navia will provide a sample Code Section 125 plan document, summary plan description, and forms for review by Employer and Employer's legal counsel. Such standard documents and forms have been prepared in accordance with the standard of care set forth in the Agreement but are general in nature and do not take into consideration facts and circumstances specific to Employer and the Benefit Plans. Consequently, Navia makes no warranties and representations that such documents and forms will comply with applicable law as they relate to the Benefit Plans. Navia is not responsible for making changes or amending the documents.

2. All Benefit Plan elections and changes to elections will be processed as instructed by Employer and in accordance with the terms of the sample plan document referenced in 1.1 above and applicable law. Employer will provide Eligible Employees with election and change of election forms provided by Navia. If necessary, for Navia to administer the other Services provided under this Agreement, Employer will collect and submit the completed election forms and/or change of election forms to Navia as soon as possible after receipt of such forms but no later than the effective date of such elections or change of elections. Employer is responsible for determining who is eligible for the Benefit Plan and who has satisfied the requirements to become a Covered Individual in the Benefit Plan. In addition, Employer is ultimately responsible for determining whether a requested change in election is permitted.

HEALTH FLEXIBLE SPENDING ARRANGEMENT ("HEALTH FSA") AND DEPENDENT CARE FLEXIBLE SPENDING ARRANGEMENT ("DAY CARE FSA") SCHEDULE BENEFIT PLAN SERVICE SCHEDULE(S) AND FEES

This Schedule is incorporated into and made a part of the Agreement. The responsibilities of the Parties set forth in this Schedule are in addition to any responsibilities set forth in the Agreement. If there is a conflict between this Schedule and any other part of the Agreement with respect to the subject matter of this Schedule, the Schedule will control. In all other conflicts, the Agreement controls. Capitalized terms not otherwise defined herein are defined as set forth in the Agreement.
As part of the Services, Employer has asked Navia to assist it with Flexible Spending Arrangement ("FSA") administration as more particularly described in this Schedule below.

1. RESPONSIBILITIES OF NAVIA

1.1. IMPLEMENTATION
Navia shall implement the Plan subject to the Plan Application and the direction and approval of Employer.

1.2. PLAN PROCESSING AND ADMINISTRATION Navia shall:

1.2.1. Provide claim reimbursements by check or direct deposit. Such claim reimbursements will be issued within two (2) Business Days after the later of: (1) the scheduled processing date; (2) the date Employer reconciles the Eligibility and Payroll Deduction Report ("EDR") or submits an approved payroll report; or (3) the receipt of funds as required in the funding section.

1.2.2. Provide notification of online availability of the EDR, Disbursement, and Year-to-Date report.

1.2.3. Provide annual year-end report within ninety (90) days after the claims Run-Out Period has expired.

1.2.4. Perform claims adjudication, including verification of date, service, and cost of service.

1.3. PLAN DESIGN OPTIONS

1.3.1. If Employer provides for the Grace Period under IRS Notice 2005-42 (the "Grace Period") Navia shall process claims against the prior Plan Year for services incurred through the 15th day of the third month following the end of the Plan Year. If applicable, apply any residual balance of Grace Period claims against the current Plan Year benefit.

1.3.2. If Employer provides for Carryover Administration under IRS Notice 2013-71 (the "Carryover") Navia shall:

1.3.2.1. Carry over the lesser of the balance in the Health FSA as of the Carryover Date or $500, from the previous year into the immediately following Health FSA Plan Year. The "Carryover Date" shall mean the date on or about the 15th day after the last day of the Run-Out Period. The "Balance" shall mean Health FSA Plan Year election less disbursements of the Health FSA.

1.3.2.2. Reduce the prior year Health FSA election according to the amount of the Carryover.

1.3.2.3. Establish a Health FSA election for Covered Employees with Carryover amounts that failed to enroll in the Health FSA in the immediately following Health FSA Plan Year. Monthly participant Fees shall apply as of the Carryover Date.

1.3.2.4. Adjudicate and process claims against the carryover amount after the Carryover Date. Upon request, Navia shall apply claims incurred in the immediately following year against unused amounts in the prior year before the Carryover Date. Such adjustments shall be subject to a Fee of $65.00 per adjustment.

2. RESPONSIBILITIES OF EMPLOYER

2.1. IMPLEMENTATION

Employer shall timely provide the Plan Application and any other information reasonably necessary for Navia to satisfy its obligations hereunder.

2.2. REPORTING

Employer shall submit an approved payroll file or reconcile the EDR against payroll deductions for each processing date through the Website. If Employer cannot or does not perform this responsibility, Navia may charge $65.00 per reconciled report. If Employer fails to provide the approved payroll file or reconcile the EDR for more than forty-five (45) days from the pay date deduction Navia may suspend claim processing.

2.3. FUNDING

For the initial term, Navia shall invoice Employer within sixty (60) days after the commencement of the Plan Year an Employer deposit equal to ten percent (10%) of the projected annual elections for the Plan (the "Deposit") or $1,000, whichever is greater. At the beginning of each subsequent Plan Year Navia reserves the right to recalculate the Deposit for that Plan Year to be paid by Employer within 30 days after the commencement of such Plan Year. Said sum, or the portion thereof not utilized, shall then be reimbursed to Employer one-hundred and eighty days (180) after the end of the final Plan Year. Employer shall remit Employer dollars equal to Covered Individual claim reimbursement upon receipt of the Disbursement Report. In the event funding is not received within ten (10) days of the scheduled reimbursement date Navia may suspend claim processing.

3. FEES

3.1. Monthly Processing and Administration Fees:

$5.00 per month per FSA Covered Employee

3.2. California Assembly Bill No. 1554 Notice (only provided upon Employer's written request): $3.50 per paper notice mailed.

3.3. Enrollment form processing: $4.00 per enrollment form received and processed.

3.4. Summary Plan Description Fee: $3.50 per Summary Plan description printed and mailed to Employer or Covered Employees. Provided only upon Employer request.

3.5. Electronic Funds Transfer: $10.00 per returned item, from attempted deposit in Covered Employee account.

3.6. Electronic Funds Transfer: $10.00 per failed direct debit from Employer account.

3.7. Enrollment Meetings and Benefit Fairs: For on-site enrollment meetings and attendance at benefit fairs by Navia:

3.7.1. Employer shall pay to Navia $75.00 per hour, or $300.00 per eight-hour day, whichever is less;
3.7.2. Air travel and lodging expenses shall be charged to Employer at Navia's cost;
3.7.3. Automobile mileage is charged at $.36/mile, plus $37.50/hour driving travel time.
3.7.4. Air travel time is charged as a full day cost, of $300.00 per day.

3.8. Plan Document Amendment Fee: In the event that Employer wishes to make changes to the Plan on any date other than the Plan anniversary date, Employer shall pay to Navia the following Fees:

3.8.1. $150 per amendment pertaining to general Plan design, eligibility or benefits.

3.9. Ad Hoc Reporting: $75 per hour for manual reports not part of the Navia reporting suite.

3.10. Noncompliant File Processing Fee: $150 per month

HEALTH REIMBURSEMENT ARRANGEMENT ("HRA") SCHEDULE

This Service Schedule is incorporated into and made a part of the Agreement. The responsibilities of the Parties set forth in this Schedule are in addition to any responsibilities set forth in the Agreement. If there is a conflict between this Schedule and any other part of the Agreement with respect to the subject matter of this Schedule, the Schedule will control. In all other conflicts, the Agreement controls. Capitalized terms not otherwise defined herein are defined as set forth in the Agreement.
As part of the Services, Employer has asked Navia to assist it with HRA administration as more particularly described in this Schedule below.

1. RESPONSIBILITIES OF NAVIA

1.1. IMPLEMENTATION
Navia shall implement the Plan subject to the Plan Application and the direction and approval of Employer.

1.2. PLAN PROCESSING AND ADMINISTRATION Navia shall:

1.2.1. Provide claim reimbursements by check or direct deposit. Such claim reimbursements will be issued within two (2) Business Days after the later of: (1) the scheduled processing date; (2) the date Employer reconciles the online contribution report or submits an approved contribution report; or (3) the receipt of funds as required in the funding section.

1.2.2. Provide notification of availability of the online contribution report, disbursement, and Year-to-Date report.

1.2.3. Provide annual year-end report within ninety (90) days after the claims Run-Out Period has expired.

1.2.4. Perform claims adjudication, including verification of date, service, and cost of service.

2. RESPONSIBILITIES OF EMPLOYER

2.1. REPORTING

2.1.1. Employer shall report to Navia all new Covered Individuals, and all changes in employment or Covered Individual information, and all terminations of Covered Individuals from the Plan on the same day of such occurrence.

2.1.2. Employer is responsible to review and verify all Year-to-Date reports and the information therein, including Covered Individual benefit maximums, contributions and account balances.

2.2. FUNDING
For the initial term, Navia shall invoice Employer within sixty (60) days after the commencement of the Plan Year an Employer deposit equal to the greater of $1,000 or ten percent (10%) of the projected annual benefit for the Plan (the "Deposit"). Such deposit shall not exceed $10,000. At the beginning of each subsequent Plan Year Navia reserves the right to recalculate the Deposit

for that Plan Year to be paid by Employer within 30 days after the commencement of such Plan Year. Said sum, or the portion thereof not utilized, shall then be reimbursed to Employer one-hundred and eighty days (180) after the end of the final Plan Year. Employer shall remit Employer dollars equal to Covered Individual claim reimbursement upon receipt of the Disbursement Report. In the event funding is not received within ten (10) days of the scheduled reimbursement date Navia may suspend claim processing.

3. FEES

3.1. Initial Setup Fee:

WAIVED

3.2. Monthly Processing and Administration Fees:

3.2.1. $5.00 per month per HRA Covered Individual

3.3. Electronic Funds Transfer: $10.00 per returned item from attempted deposit in Covered Employee account.

3.4. Electronic Funds Transfer: $10.00 per failed direct debit from Employer account.

3.5. Summary Plan Description Fee: $3.50 per Summary Plan Description printed and mailed to Employer or Covered Employees. Provided only upon Employer request.

3.6. Summary of Benefits & Coverage Fee: $3.50 per Summary of Benefits & Coverage printed and mailed to Employer or employees. Provided only upon Employer request.

3.7. Enrollment Meetings and Benefit Fairs: For on-site enrollment meetings and attendance at benefit fairs by Navia:

3.7.1. Employer shall pay to Navia $75.00 per hour, or $300.00 per eight-hour day, whichever is less;
3.7.2. Air travel and lodging expenses shall be charged to Employer at Navia's cost;
3.7.3. Automobile mileage is charged at $.36/mile, plus $37.50/hour driving travel time.
3.7.4. Air travel time is charged as a full day cost, of $300.00 per day.

3.8. Plan Document Amendment Fee: In the event that Employer wishes to make changes to the Plan on any date other than the Plan anniversary date, Employer shall pay to Navia the following Fees:

3.8.1. $150 per amendment pertaining to general Plan design, eligibility or benefits.

3.9. Ad Hoc Reporting: $75 per hour for manual reports not part of the Navia reporting suite.

3.10. Noncompliant File Processing Fee: $150 per month

EXHIBIT A BUSINESS ASSOCIATE AGREEMENT

This Exhibit is incorporated into and made part of the Agreement. The responsibilities of the Parties set forth in this Exhibit are in addition to any responsibilities set forth in the Agreement. If there is a conflict between this Exhibit and any other part of the Agreement with respect to the subject matter of this Exhibit, this Exhibit will control. In all other conflicts, the Agreement controls. This Exhibit is intended to comply with the Business Associate Agreement provisions set forth in 45 CFR §§ 164.314 and 164.504(e), and any other applicable provisions of 45 CFR parts 160 and 164, issued pursuant to the Health Insurance Portability and Accountability Act of 1996, Public Law 104-191 as amended, including by the Health Information Technology for Economic & Clinical Health Act of the American Recovery and Reinvestment Act of 2009 ('ARRA"), (collectively "HIPAA").

Navia recognizes that in the performance of Services under the Agreement it may have access to, create, and/or receive from the Benefit Plan(s) or on its behalf Protected Health Information ("PHI'). For purposes herein, PHI shall have the meaning given to such term in 45 CFR § 164.103, limited to the information created or received from the Benefit Plan(s) or on its behalf by Navia. Whenever used in this Exhibit A other capitalized terms shall have the respective meaning set forth below or in the Agreement, unless a different meaning shall be clearly required by the context. In addition, other capitalized terms used in this Exhibit A but not defined herein or in the Agreement, shall have the same meaning as those terms are defined under HIPAA. This Exhibit shall be automatically amended to incorporate changes by Congressional act or by regulations of the Secretary that affect Business Associate or Covered Entity's obligations under this Exhibit.

1. Definitions.

1.1. Breach. "Breach" shall have the same meaning as the term "breach" in 45 CFR 164.402.

1.2. Business Associate. "Business Associate" shall mean Navia Benefit Solutions, Inc. ("Navia").

1.3. Covered Entity. "Covered Entity" shall mean the Benefit Plan(s).

1.4. Electronic Protected Health Information. "Electronic Protected Health Information" ("ePHI") shall have the same meaning as the term "electronic Protected Health Information" in 45 CFR 160.103, limited to the information created, received, maintained, or transmitted by Business Associate on behalf of Covered Entity.

1.5. HHS. "HHS" shall mean the Department of Health and Human Services.

1.6. HIPAA. "HIPAA" shall mean the Health Insurance Portability and Accountability Act of 1996.

1.7. HITECH. "HITECH" shall mean the Health Information Technology for Economic and Clinical Health Act.

1.8. Individual. "Individual" shall have the same meaning as the term "individual" in 45 CFR 160.103 and shall include a person who qualifies as a personal representative in accordance with 45 CFR 164.502(g).

1.9. Privacy Rule. "Privacy Rule" shall mean the Standards for Privacy of Individually Identifiable Health Information at 45 CFR part 160 and part 164, subparts A and E.

1.10. Protected Health Information. "Protected Health Information" ("PHI") shall have the same meaning as the term "protected health information" in 45 CFR 160.103, limited to the information created, received, maintained, or transmitted by Business Associate on behalf of Covered Entity.

1.11. Required by Law. "Required by Law" shall have the same meaning as the term "Required by Law" in 45 CFR 164.103.

1.12. Secretary. "Secretary" shall mean the U.S. Secretary of the Department of Health and Human Services or his or her designee.

1.13. Security Incident. "Security Incident" shall have the same meaning as the term "security incident" in 45 CFR 164.304.

1.14. Security Rule. "Security Rule" shall mean the Security Standards and Implementation Specifications at 45 CFR Part 160 and Part 164, subparts A and C.

1.15. Standards for Electronic Transactions Rule. "Standards for Electronic Transactions Rule" means the final regulations issued by HHS concerning standard transactions and code sets under the Administration Simplification provisions of HIPAA, 45 CFR Part 160 and Part 162.

1.16. Subcontractor. "Subcontractor" shall have the same meaning as the term "subcontractor" in 45 CFR 160.103.

1.17. Unsecured Protected Health Information. "Unsecured Protected Health Information" shall have the same meaning given the term "unsecured protected health information" in 45 CFR 164.402.

2. Obligations and Activities of Business Associate

2.1. Business Associate agrees to not use or disclose PHI other than as permitted or required by this Agreement or as Required by Law.

2.2. Business Associate agrees to take reasonable efforts to limit its use and disclosure of, and requests for, PHI to the minimum necessary to accomplish the intended purpose of the use, disclosure, or request. The foregoing minimum necessary standard does not apply to: 1) disclosures or requests by a health care provider for treatment purposes; (2) disclosures to the Individual who is the subject of the information; (3) uses or disclosures made pursuant to an Individual's authorization; (4) uses or disclosures required for compliance with HIPAA; (5) disclosures to HHS when disclosure of information is required under the Privacy Rule for enforcement purposes; (6) uses or disclosures that are required by other law.

2.3. Business Associate agrees to develop, implement, maintain, and use appropriate administrative, technical, and physical safeguards to protect the privacy of PHI and comply with applicable requirements under the Security Rule.

2.4. Business Associate shall notify Covered Entity of any Breach of Unsecured PHI of which it becomes aware. Such notice shall include, to the extent possible, the information listed in Section 2.6. A Breach shall be treated as discovered as of the first day on which such Breach is known, or by exercising reasonable diligence would have been known, to any person, other than the individual committing the Breach, who is an employee, officer, or other agent of Business Associate.

2.5. Notice shall be made without unreasonable delay and in no case later than sixty (60) calendar days after the discovery of a Breach by Business Associate.

2.6. Notice of a Breach shall include, to the extent possible the following:

2.6.1. Identification of each individual whose Unsecured PHI has been or is reasonably believed to have been accessed, acquired, used, or disclosed as a result of the breach.

2.6.2. A brief description of what happened, including the date of the Breach and the date of the discovery of the Breach, if known.

2.6.3. A description of the types of Unsecured PHI that were involved in the Breach (such as full name, Social Security number, date of birth, home address, or account number).

2.6.4. The steps Individuals should take to protect themselves from potential harm resulting from the Breach.

2.6.5. A brief description of any action taken to investigate the Breach, mitigate losses, and to protect against any further Breaches.

2.6.6. Contact procedures for Individuals to ask questions or learn additional information, which shall include a toll-free telephone number, an e-mail address, web site, or postal address.

2.7. If a law enforcement official determines that a notification or notice would impede a criminal investigation or cause damage to national security, such notification, notice or posting shall be delayed in accordance with 45 CFR 164.412.
Upon Covered Entity's request, Business Associate will provide notice of Breach to the Individual(s) affected and such notice shall include, to the extent possible, the information listed in 2.6., unless, upon occurrence of a Breach, Covered Entity requests to disseminate or Business Associate and Covered Entity agree that Covered Entity will disseminate the notice(s). Any notice provided by Covered Entity to the Individual(s) shall comply with the content requirements listed in section 2.6., as well as any requirements provided under HIPAA, HITECH, and other applicable government guidance. Any notice required to be provided to HHS will be provided by Covered Entity. Business Associate agrees to report to Covered Entity any Use or Disclosure of PHI not provided for by this Exhibit and/or any Security Incident of which it becomes aware, provided that notice is hereby deemed given for Unsuccessful Security Incidents and no further notice of such Unsuccessful Security Incidents shall be given. For purposes of this Section, "Unsuccessful Security Incidents" mean, without limitation, pings and other broadcast attacks on Business Associate's firewall, port scans, unsuccessful log-on attempts, denial of service attacks, and any combination of the above, as long as no such incident results in unauthorized access, acquisition, Use, or Disclosure of Protected Health Information. Notification(s) under this Section, if any, will be delivered to contacts identified by the Employer by any means Business Associate selects, including through e-mail. Business Associate's obligation to report under this Section is not and will not be construed as an acknowledgement by Business Associate of any fault or liability with respect to any Use, Disclosure, or Security Incident.

2.8. Business Associate shall require each of its subcontractors, agents, or brokers, that creates, receives, maintains, or transmits PHI on behalf of Covered Entity to enter into a written agreement with Business Associate that provides satisfactory assurances that the subcontractor will appropriately safeguard that information, including without limitation the subcontractor's agreement to be bound by the same restrictions and conditions that apply to Business Associate with respect to such information.

2.9. Business Associate agrees to make internal practices, books, and records, including policies and procedures and PHI relating to the use and disclosure of PHI available to the Secretary, within ten (10) Business Days after receipt of written request or otherwise as designated by the Secretary for purposes of the Secretary determining Covered Entity's compliance with the Privacy Rule

2.10. Business Associate agrees to document disclosures of PHI and information related to such disclosures as required for Covered Entity to respond to a written request by an Individual for an accounting of disclosures of PHI in accordance with 45 CFR 164.528. Business Associate will not be obligated to record disclosures of PHI or otherwise account for disclosures of PHI if neither Covered Entity nor Business Associate is required to account for such disclosures pursuant to the Privacy Rule.

2.11. Business Associate agrees to provide to Covered Entity or, upon Covered Entity's request, to an Individual, within ten (10) Business Days after receipt of written request, information collected in accordance with Section 2.10 of this Exhibit, in order to permit Covered Entity to respond to a written request by an Individual for an accounting of disclosures of PHI in accordance with 45 CFR 164.528.

2.12. Business Associate agrees to provide access, at the request of Covered Entity and within ten (10) Business Days after receipt of written request, to PHI in the custody and control of Business Associate in a Designated Record Set, to Covered Entity or, as directed by Covered Entity, to an Individual in order to meet the requirements under 45 CFR 164.524. If PHI is maintained in a Designated Record Set electronically, and an electronic copy of such PHI is requested, Business Associate will provide an electronic copy in the form and format requested if it is readily producible in such form and format. If it is not readily producible in such format, Business Associate will work with the Covered Entity or, at the Covered Entity's request, the individual to determine an alternative form and format that enable Covered Entity to meet its electronic access obligations under 45 CFR 164.524.

2.13. Business Associate agrees to make any amendment(s) to PHI in a Designated Record Set in the custody or control of Business Associate within ten (10) Business Days after receiving written request from the Covered Entity or, upon Covered Entity's request, as requested in writing by an Individual pursuant to 45 CFR 164.526.

2.14. In the event that Business Associate transmits or receives any Covered Electronic Transaction on behalf of the Covered Entity, it shall comply with all applicable provisions of the Standards for Electronic Transactions Rule to the extent Required by Law, and shall ensure that any subcontractors or agents that assist Business Associate in conducting Covered Electronic Transactions on behalf of the Covered Entity agree in writing to comply with the Standards for Electronic Transactions Rule to the extent Required by Law.

2.15. Business Associate shall not directly or indirectly receive payment in exchange for any PHI of an Individual unless Covered Entity or Business Associate received a valid authorization from the Individual, in accordance with 45 CFR 164.508, unless permitted under the HIPAA rules.

2.16. Business Associate shall not use PHI for marketing purposes without a valid authorization from the affected Individuals, unless such communication is permitted under the HIPAA rules

2.17. Business Associate shall not use or disclose genetic information for underwriting purposes in violation of the HIPAA rules.

3. **Permitted Uses and Disclosures by Business Associate**

3.1. Except as otherwise limited in this Agreement, Business Associate may use or disclose PHI to perform functions, activities, or services for, or on behalf of, Covered Entity related to the Administrative Services Agreement between Business Associate and Covered Entity.

3.2. Except as otherwise limited in this Agreement, Business Associate may disclose PHI for the proper management and administration of Business Associate, provided that such disclosures are Required by Law, or Business Associate obtains reasonable assurances from the person to whom the information is disclosed that it will remain confidential and be used or further disclosed only as Required by Law or for the purpose for which it was disclosed to the person, and the person notifies Business Associate of any instance of which it is aware in which the confidentially of the information has been Breached.

3.3. Except as otherwise limited in this Agreement, Business Associate may use PHI to provide Data Aggregation services to Covered Entity as permitted by 45 CFR 164.504(e)(2)(i)(B).

3.4. Except as otherwise limited in this Agreement, Business Associate may use PHI for the proper management and administration of Business Associate or to carry out the legal responsibilities of Business Associate.

3.5. Business Associate may use PHI to report violations of law to appropriate Federal and State authorities, consistent with 164.502(j)(1).

3.6. Except as expressly permitted by this Agreement, Business Associate shall not use or disclose PHI in any manner that would violate the requirements of the Privacy Rule if done by Covered Entity.

4. Obligations of Covered Entity and Employer

4.1. Covered Entity shall notify Business Associate of any limitation(s) in its notice of privacy practices of Covered Entity in accordance with 45 CFR 164.520, to the extent that such limitation may affect Business Associate's use or disclosure of PHI.

4.2. Covered Entity shall notify Business Associate of any changes in, or revocation of, permission by Individual to use or disclose PHI, to the extent that such changes may affect Business Associate's use or disclosure of PHI.

4.3. Covered Entity shall notify Business Associate of any restriction to the use or disclosure of PHI that Covered Entity has agreed to in accordance with 45 CFR 164.522, to the extent that such restriction may affect Business Associate's use or disclosure of PHI.

4.4. Employer acknowledges and agrees that Business Associate may disclose PHI in its possession to Employer's workforce as necessary to administer the Plan(s). Employer shall timely notify Business Associate in writing of any terminations or changes of such employees. Employer shall indemnify and hold harmless Business Associate and its employees for any and all liability Business Associate may incur as a result of any improper use or disclosure of PHI by or caused the Plan, Employer, or Employer's Workforce.

5. Permissible Requests by Covered Entity

5.1. Covered Entity shall not request Business Associate to use or disclose PHI in any manner that would not be permissible under the Privacy Rule if done by Covered Entity, except for uses or disclosures for the purposes of data aggregation, management, and administrative activities of Business Associate.

6. Miscellaneous

6.1. It is agreed that due to the manner in which PHI is retained and the retention requirements of the Internal Revenue Service, returning or destroying all of the PHI received from Covered Entity or created or received by Business Associate on behalf of Covered Entity, is infeasible. Therefore, Business Associate shall extend the protections of this Agreement to such PHI and shall limit further uses and disclosures of such PHI to those purposes that make the return or destruction infeasible, for so long as Business Associate maintains such PHI.

EXHIBIT B EMPLOYER CERTIFICATION

This Exhibit is incorporated into and made part of the Agreement. The responsibilities of the Parties set forth in this Exhibit are in addition to any responsibilities set forth in the Agreement. If there is a conflict between this Exhibit and any other part of the Agreement with respect to the subject matter of this Exhibit, this Exhibit will control. In all other conflicts, the Agreement controls.

Employer sponsors a Benefit Plan or Benefit Plans where certain members of Employer's workforce perform services in connection with administration of the Benefit Plan(s). Employer acknowledges and agrees that the Standards for Privacy of Individually Identified Health Information (45 CFR Part 164, the "Privacy Standards"), prohibit the Benefit Plan(s) or its Business Associates from disclosing Protected Health Information (as defined in Section 164.501 of the Privacy Standards) to members of Employer's workforce unless Employer agrees to the conditions and restrictions set out below. To induce the Benefit Plan(s) to disclose Protected Health Information to members of Employer's workforce as necessary for them to perform administrative functions for the Benefit Plan(s), Employer hereby accepts these conditions and restrictions and certifies that the Benefit Plan(s) documents have been amended to reflect these conditions and restrictions. Employer agrees to:

1. Not use or further disclose the information other than as permitted or required by the Plan Document or as required by law;

2. Ensure that any agent or subcontractor, to whom it provides Protected Health Information received from the Benefit Plan(s), agrees to the same restrictions and conditions that apply to Employer with respect to such information;

3. Not use or disclose Protected Health Information for employment-related actions and decisions or in connection with any other benefit or employee Benefit Plan of Employer;

4. Report to the Benefit Plan(s) any use or disclosure of the Protected Health Information of which it becomes aware that is inconsistent with the uses or disclosures permitted by the Benefit Plan(s) or required by law;

5. Make available Protected Health Information to individuals in accordance with Section 164.524 of the Privacy Standards;

6. Make available Protected Health Information for amendment by Covered Individuals and incorporate any amendments to Protected Health Information in accordance with Section 164.526 of the Privacy Standards;

7. Make available the Protected Health Information required to provide an accounting of disclosures to Covered Individuals in accordance with Section 164.528 of the Privacy Standards;

8. Make its internal practices, books, and records relating to the use and disclosure of Protected Health Information received from the Benefit Plan(s) available to the Department of Health and Human Services for purposes of determining compliance by the Benefit Plan(s) with the Privacy Standards;

9. If feasible, return or destroy all Protected Health Information received from the Benefit Plan(s) that Employer still maintains in any form, and retain no copies of such Information when no longer needed for the purpose for which disclosure was made, except that, if such return or

destruction is not feasible, limit further uses and disclosures to those purposes that make the return or destruction of the information infeasible; and

10. Ensure the adequate separation between the Benefit Plan(s) and members of Employer's workforce, as required by law.

EXHIBIT C CALIFORNIA CONSUMER PRIVACY ACT DATA

This Exhibit shall be incorporated into and be made part of the Agreement only in the event Navia receives Personal Information from or on behalf of the Employer and provides Services as described in the Agreement to Employer's Employees who are "Consumers" as defined in Section 17014 of Title 18 of the California Code of Regulations, as that section read on September 1, 2017.

This Exhibit is intended to comply with the California Consumer Privacy Act of 2018 ("CCPA"), as amended (Cal. Civ. Code §§ 1798.100 to 1798.199), and any related regulations or guidance provided by the California Attorney General.

The responsibilities of the Parties set forth in this Exhibit are in addition to any responsibilities set forth in the Agreement. If there is a conflict between this Exhibit and any other part of the Agreement with respect to the subject matter of this Exhibit, this Exhibit will control. In all other conflicts, the Agreement controls.

This exhibit shall not apply to, and Protected Information shall not include, Medical information governed by the Confidentiality of Medical Information Act (Part 2.6 (commencing with Section 56) of Division 1) or protected health information that is collected by a covered entity or business associate governed by the privacy, security, and breach notification rules issued by the United States Department of Health and Human Services, Parts 160 and 164 of Title 45 of the Code of Federal Regulations, established pursuant to the Health Insurance Portability and Accountability Act of 1996 (Public Law 104-191) and the Health Information Technology for Economic and Clinical Health Act (Public Law 111-5).

1. Definitions. Capitalized terms used herein shall have the same meanings set forth in the CCPA unless otherwise stated.

   (a) **"Customer"** means Employer.

   (b) "**Personal Information**" means information that identifies, relates to, describes, is reasonably capable of being associated with, or could reasonably be linked, directly or indirectly, with a particular consumer or household such as a real name, alias, postal address, unique personal identifier, online identifier, Internet Protocol address, email address, account name, social security number, driver's license number, passport number, or other similar identifiers.

   (c) "**Service Provider**" means Navia Benefit Solutions, Inc.

2. Service Provider Obligations.

   (a) Service Provider will:

      (i) comply with the terms and conditions set forth in this Exhibit

      (ii) not further collect, sell, or use the Personal Information except to perform the Services or as necessary for a Business Purpose.

      (iii) aggregate, deidentify, or pseudonymize Personal Information solely for the stated Business Purpose, as permitted by law or the Agreement.

Such aggregated, deidentified, or pseudonymize data, shall no longer be considered Personal Information.

(iv) use or disclose Personal Information for any Business Purpose as permitted under the CCPA and required or permitted to provide Services under the Agreement. "**Business Purpose**" means the use of personal information for Service Provider's operational purposes, contractual purposes, and purposes of enhancing or optimizing the Services, provided that the use of personal information shall be reasonably necessary and proportionate to achieve the purpose for which the personal information was collected or processed or for another purpose that is compatible with the context in which the Personal Information was collected. Business Purpose includes providing services on behalf of the Customer or Service Provider, including maintaining or servicing accounts, providing customer service, processing or fulfilling orders and transactions, verifying customer information, processing payments, providing financing, providing advertising or marketing services, providing analytic services, or providing similar services on behalf of the Customer or Service Provider.

(v) Redirect to Customer any request to know, access, or delete Personal Information that Service Provider receives from a Covered Individual.

(b) Customer will:

(i) Use or share Personal Information with Service Provider as necessary to perform the Business Purpose.

(ii) comply with the terms and conditions set forth in this Exhibit.

(iii) comply with any applicable laws and regulations and use only secure methods, according to accepted industry standards, when transferring or otherwise making available Personal Information to Service Provider.

3. Return or Disposal of Personal Information. If feasible and in compliance with retention requirements in the Agreement and required by applicable law, at Customer's written request or upon termination or expiration of this Agreement, Service Provider will promptly return to Customer or securely dispose of all Personal Information in its possession.

Metropolitan Transit System

Amendment 1

June 2, 2025 MTS Doc No. G2506.1-21

ADMINISTRATIVE SERVICES FOR EMPLOYEE BENEFITS

Navia Benefit Solutions
Hilarie Aitken
CEO
600 Naches Ave SW
Renton, WA 98057

This shall serve as Amendment No.1 to the original agreement G2506.0-21 as further described below.

SCOPE

Pursuant to the Scope of Work of the San Diego Metropolitan Transit System (MTS) contractor shall authorize additional contract capacity to include the additional estimated quantities as summarized below based on the contracted rates of services.

Item	Description	Quantity	Unit Price	Extended Price
1	Active HRA	2204	$5.10	$11,240.40
2	Active FSA	1596	$5.15	$8,219.40
3	Retiree HRA	7106	$5.10	$36,240.60
			Amendment 1 Total:	$55,700.40

SCHEDULE

There shall be no change to the schedule of the agreement.

PAYMENT

This contract amendment shall authorize additional costs not to exceed $55,700.40. The total value of this contract including this amendment shall be in the amount of $145,700.40 as summarized below. This amount shall not be exceeded without prior written approval from MTS.

Amendment	Description	Additional Funds	Contract Value
0	Base Contract	N/A	$90,000.00
1	Add Funds	$55,700.40	$145,700.40

San Diego Metropolitan Transit System (MTS) is a California public agency comprised of San Diego Transit Corp., San Diego Trolley, Inc. and San Diego and Arizona Eastern Railway Company (nonprofit public benefit corporations). MTS member agencies include the cities of Chula Vista, Coronado, El Cajon, Imperial Beach, La Mesa, Lemon Grove, National City, Poway, San Diego, Santee, and the County of San Diego. MTS is also the For-Hire Vehicle administrator for multiple cities in San Diego County.

Please sign and return the copy to the Contract Specialist at MTS. All other terms and conditions shall remain the same and in effect. Retain the other copies for your records.

Sincerely,

Sharon Cooney, Chief Executive Officer

Agreed:

Hilarie Aitken, CEO
Navia Benefit Solutions

Date: 06/09/2025

Metropolitan Transit System

Amendment 2

November 20, 2026 MTS Doc No. G2506.2-21

ADMINISTRATIVE SERVICES FOR EMPLOYEE BENEFITS

Navia Benefit Solutions
Tina Boyd
General Counsel & Compliance Officer
600 Naches Ave SW
Renton, WA 98057

This shall serve as Amendment No.2 to the original agreement G2506.0-21 as further described below.

SCOPE

Pursuant to the Scope of Work of the San Diego Metropolitan Transit System (MTS) contractor shall:

1) Authorize additional contract capacity to include the estimated annual quantities as summarized below.

Item	Description	Quantity
1	Active Flexible Spending Account	1416
2	Active Health Reimbursement Arrangement	1752
3	Retiree Health Reimbursement Arrangement	4140

2) Update the Plan Fees beginning January 1, 2027, as outlined below.

Description	Participant Fee
Active Flexible Spending Account	$5.30
Active Health Reimbursement Arrangement	$5.20
Retiree Health Reimbursement Arrangement	$5.20

All other terms and conditions shall remain the same and in effect.

SCHEDULE

There shall be no change to the schedule of the agreement.

PAYMENT

This contract amendment shall authorize additional costs not to exceed $38,143.20. The total value of this contract including this amendment shall be in the amount of $183,843.60 as summarized below. This amount shall not be exceeded without prior written approval from MTS.

AM	Description	Board Authorization	Additional Funds	Contract Value
0	Base Contract	N/A	N/A	$90,000.00
1	Add Funds	N/A	$55,700.40	$145,700.40
2	Add Funds	TBD - 11/19/26	$38,143.20	$183,843.60

Please sign and return the copy to the Contract Specialist at MTS. All other terms and conditions shall remain the same and in effect. Retain the other copies for your records.

Sincerely,

Sharon Cooney, Chief Executive Officer

Agreed:

Tina Boyd, General Counsel &
Compliance Officer
Navia Benefit Solutions

Date: _____

Metropolitan Transit System

DRAFT FOR EXECUTIVE COMMITTEE REVIEW DATE: 11/5/2026

Agenda Item No. 06

MEETING OF THE SAN DIEGO METROPOLITAN TRANSIT SYSTEM
BOARD OF DIRECTORS

November 19, 2026

SUBJECT:

Rail Safety Cloud Incident Management System (RS-CIMS) – Contract Award

RECOMMENDATION:

That the San Diego Metropolitan Transit System (MTS) Board of Directors authorize the Chief Executive Officer (CEO) to:

1) Execute MTS Doc No. L1692.0-25 (in substantially the same format as Attachment A), with Origami Risk LLC (Origami), to provide RS-CIMS Solution in the amount of $650,650.00 for a three (3) year base period with (2) two 1-year options, for a total of five (5) years; and

2) Exercise the option years at the CEO's discretion.

Budget Impact

The total contract cost of services is estimated to be $650,650.00 (Attachment B). This project will be funded by the Information Technology (IT) Operating Budget account 661010-571250. The total cost of this contract is shown below:

Description	Estimated Services
Year 1	$199,250.00
Year 2	$107,850.00
Year 3	$107,850.00
Subtotal (Base Years)	**$414,950.00**
Year 4 (Option Year 1)	$117,850.00
Year 5 (Option Year 2)	$117,850.00
Subtotal (Option Years)	**$235,700.00**
Grand Total	**$650,650.00**

DISCUSSION:

The MTS Rail Safety Department is seeking a RS-CIMS to modernize and streamline its safety and incident management processes while meeting the compliance demands of Federal Transit Administration (FTA) 49 CFR Part 673.75 safety risk management. The Rail Safety Department is responsible for acquiring and analyzing safety data on Train Operator's efficiency checks,



evaluations, rule violations, accidents/incidents, emergency brake applications, near-misses, hazardous conditions, safety events, system-wide injuries, and risk-based inspections.

Currently, MTS utilizes a disjointed and manual approach that slows down and complicates safety operations, lacks effective safety prioritization workflows, creates repetitive waste and increases the risk of manual errors in reporting. RS-CIMS will address these issues by eliminating manual management and disjointed interfaces through the use of key integrations along our Rail Software Ecosystem. This critical tool will enable the Rail Safety department to track safety incident locations, categorize issues, and leverage a management system to prioritize and address safety concerns effectively. By incorporating robust analytics capabilities, this solution will empower management with critical insights, improve situational awareness for Rail employees, and enhance overall safety for both riders and staff.

Similar systems are in place at Sacramento Regional Transit District, Orange County Transportation Authority, Texas, Ohio, Illinois and Iowa Department of Transportation. RS-CIMS will enable MTS to future-proof its processes, lower operational costs and risk, and provide enhanced analytics to help the Rail Safety Department identify critical issues early and often.

On October 8, 2025, MTS issued a Request for Proposal (RFP) for a RS-CIMS Solution. A total of ten (10) proposals were received on the due date of December 3, 2025, from the following firms:

#	Proposer Name	Firm Certification
1	Cloud SynApps Inc.	N/A
2	Clovity Inc.	Small Business (SB) and Minority Owned Business (MBE)
3	Concourse Tech Inc.	N/A
4	DataHouse Consulting Inc. (DataHouse)	N/A
5	Intelex Technologies ULC (Intelex)	N/A
6	Merp Systems Inc	Disadvantaged Business Enterprise (DBE), SB, MBE, and Woman Owned Business (WBE)
7	Net Consulting Group	N/A
8	Origami	N/A
9	Tracsis Rail Technology Solutions (Tracsis)	N/A
10	Trapeze Software Group, Inc. (Trapeze)	N/A

All proposals were deemed responsive and responsible and were evaluated by a committee consisting of representatives from the Finance, IT, and Rail Safety departments. The proposals were scored based on the following evaluation criteria:

Evaluation Criteria	Total Possible Points
Qualifications of the Firm or Individual	27.5
Staffing, Organization, and Management Plan	27.5
Work Plan	20
Cost and Price	25
Total	100

The following table illustrates the initial scores and ranking of each firm:

Proposer Name	Technical Score	Cost Score	Total Score (Maximum 100)	Ranking
Clovity Inc.	61.67	25	86.67	1
Net Consulting Group	63.67	5.63	69.3	2
Origami	52.17	5.33	57.5	3
Merp Systems Inc	53.5	3.17	56.67	4
Trapeze	47	6.8	53.8	5
Concourse Tech Inc.	31.17	14.14	45.31	6
Cloud SynApps Inc.	40	1.9	41.9	7
Tracsis	37.33	3.88	41.21	8
DataHouse	38.5	1.88	40.38	9
Intelex	28.17	6.88	35.05	10

On February 10, 2026, Invitations for Presentations and Demonstrations were sent to the proposers who met the established competitive range threshold of 50.00 points based on the total evaluation score following the evaluation panel's review. The proposers were asked technical questions about their software solutions and were asked to demonstrate, in a realistic, production-like environment, how their software meets the objectives outlined in this RFP.

On March 4, 2026, the evaluation panel met again to evaluate the proposals based on the findings from the Presentations, and Demonstrations. Below are the scores:

Proposer Name	Technical Score	Cost Score	Total Score (Maximum 100)	Ranking
Clovity Inc.	42.17	25	67.17	1
Origami	61.17	5.33	66.5	2
Trapeze	45	6.8	51.8	3
Net Consulting Group	39.83	5.63	45.47	4
Merp Systems Inc	37.5	3.17	40.67	5

The evaluation panel established a competitive range threshold of 65.00 points, based on the total evaluation score, to move forward with the evaluation. On April 14, 2026, Request for Revised Proposals No. 1 was sent to the two highest-ranked proposers. After receiving responses from both proposers, the evaluation panel met again on May 5, 2026. Below are the scores:

Proposer Name	Technical Score	Cost Score	Total Score (Maximum 100)	Ranking
Origami	63	5.33	68.33	1
Clovity Inc.	34.83	25	59.83	2

With the competitive range threshold of 65.00 points established, based on the total evaluation score, the evaluation panel confirmed that the evaluation would proceed with the highest-ranked proposer. On May 20, 2026 and July 8, 2026, Requests for Revised Proposals Nos. 1 and 2 were sent to Origami regarding technical specifications and to request clarification on the work plan.

A request for a Best and Final Offer (BAFO) was sent to Origami and Origami responded with a $12,000 deduction from $662,650.00 to $650,650.00. The Independent Cost Estimate (ICE) for the services was $757,958.71. Based on the objectives of this procurement and consideration of the evaluation criteria, Origami presented the best overall value to MTS.

That the MTS Board of Directors authorize the CEO to:

1) Execute MTS Doc No. L1692.0-25 (in substantially the same format as Attachment A), with Origami, to provide RS-CIMS Solution in the amount of $650,650.00 for a three (3) year base period with (2) two 1-year options, for a total of five (5) years; and

2) Exercise the option years at the CEO's discretion.

/s/ Sharon Cooney
Sharon Cooney
Chief Executive Officer

Key Staff Contact: Julia Tuer, 619.557.4515, julia.tuer@sdmts.com

Attachments: A. Draft Agreement, MTS Doc. No. L1692.0-25
B. Scope of Work
C. Cost Form

Metropolitan Transit System

STANDARD AGREEMENT

FOR

MTS DOC. NO. L1692.0-25

RAIL SAFETY CLOUD INCIDENT MANAGEMENT SYSTEM (RS-CIMS)

THIS AGREEMENT is entered into this _____ day of _____, 2026 in the State of California by and between San Diego Metropolitan Transit System ("MTS"), a California public agency, and the following, hereinafter referred to as "Contractor":

Name: Origami Risk

Address: 222 N LaSalle Street, Ste 2100

Chicago (City) IL (State) 60601 (Zip)

Form of Business: Limited Liability Company
(Corporation, Partnership, Sole Proprietor, etc.)

Email: jkuhr@origamirisk.com

Telephone: 224-456-8886

Authorized person to sign contracts: Earne Bentley (Name) President Enterprise Growth (Title)

The Contractor agrees to provide services as specified in the conformed Scope of Work/Technical Specification (Exhibit A), Contractor's Cost/Pricing Form (Exhibit B), and in accordance with the Standard Agreement, including Standard Conditions (Exhibit C), Forms (Exhibit D), and Policy 44C Travel Guidelines for Contractors (Exhibit E).

The contract term is for up to three (3) base years and two (2) 1-year options, exercisable at MTS's sole discretion, for a total of five (5) years. Base period shall be effective December 1, 2026 through November 30, 2029 and option years shall be effective December 1, 2029 through November 30, 2031, if exercised by MTS.

Payment terms shall be net 30 days from invoice date. The total cost of this contract shall not exceed $414,950.00 for the base years and $235,700.00 for the option years, for a contract total not to exceed $650,650.00 without the express written consent of MTS.

SAN DIEGO METROPOLITAN TRANSIT SYSTEM	ORIGAMI RISK
By: _____ Sharon Cooney, Chief Executive Officer Approved as to form: By: _____ Karen Landers, General Counsel	By _____ Title: _____

Origami Risk

Response to RFP Doc No. L1692.0-25 for a:

Rail Safety Cloud Incident Management System

Prepared for:

San Diego Metropolitan Transit System

Submitted to: Roman Lazcano, Procurement Specialist
Submitted by: Mike Fix, Sales Associate

December 3, 2025

origamirisk.com
222 North LaSalle Street, Suite 2100, Chicago, IL 60601

Table of Contents

Letter of Transmittal 1
Technical Proposal 1
Qualifications, Related Experience, and References of Proposer 1
Proposed Staffing, Organization, and Management Plan 27
Work Plan 33
Insurance 37
Exceptions/Deviations 37
Cost and Price Proposal 37
Appendices 38
Appendix A - Audited Financial Statements & Financial References 38
Appendix B - Staffing Plan 39
Appendix C - Organizational Chart 40
Appendix D - Recruitment of Qualified Personnel 41
Appendix E - Insurance Coverage 42
Appendix F - Technical & Contractual Exceptions 43
Additional Appendices 48
Certification Regarding Debarment 49
State Restrictions on Campaign Contributions 50
Compliance with EEO Program 52
Brand Names 53
Completed RFP Forms 54
Contact Information 54
Designation of Subcontractors 55
MTS DBE Program – Information for Bidder List and Commercial Useful Function 56
California Public Records Act Acknowledgement Form 57
Noncollusion Declaration Form 58
Iran Contracting Act Certification Form 59
Vendor Security Questionnaire 60

Tables

Table 1—Scope of Work & Origami's Platform 3

Letter of Transmittal

December 3, 2025

To Roman and The MTS Team,

Origami Risk (Origami) is pleased to present our proposal to San Diego Metropolitan Transit System (MTS) for a Rail Safety Cloud Incident Management System (RS-CIMS). We are eager to support the streamlining and automation of your incident lifecycle on our flexible and extensible platform.

As a provider for the City of Sacramento's transit system and several state Departments of Transportation, Origami has the expertise required to support your objectives. With the selection of Origami's configurable, Cloud-hosted platform, MTS will be able to streamline the collection of employee incidents, identify root causes, assess, and mitigate risk to reduce injuries and improve your safety culture.

Origami is the only solution on the market that provides comprehensive RMIS, GRC, and EHS functions on a single platform. Our clients have recognized significant ROI from leveraging Origami's fully integrated risk management approach. For MTS, this means better collaboration via dissolved silos, improved processes and workflows, less technical debt, and continuity of services.

Redhand Advisors' 2025 RMIS Report confirms that Origami outperforms all its competitors in system capabilities and that we have the highest client satisfaction scores for the last six consecutive years. Origami also boasts an outstanding 99% client retention rate, driven by the trust we establish with every client and the consistent and robust investments we make in our people, products, and platform.

Our team will provide MTS with unmatched personalized services and dedication. To position you for future-state objectives, Origami can easily extend to additional risk management functions, capturing enterprise use cases while surfacing insights, driving better decision making, while supporting MTS' compliance, operational excellence, and overall resilience.

I look forward to working with you during the next steps of your selection process, and ultimately, I am confident in the potential of an Origami-MTS partnership. This proposal is valid for 120 days. We acknowledge the release of Addendum 1. Earne Bentley is authorized to negotiate with MTS on behalf of Origami. His signature is included below. Origami is the prime contractor and will not be working with subcontractors for the proposed work.

Sincerely,

Michael Fix, Sales Associate
Origami Risk
mfix@origamirisk.com
(224) 258-4927
222 N LaSalle St., Ste 2100, Chicago IL, 60601

Earne Bentley, President Enterprise Growth

Technical Proposal

Qualifications, Related Experience, and References of Proposer

A. Proposer Profile

Founded in 2009 to innovate within the risk and insurance software industry, Origami's mission is to simplify risk and insurance for better insights and greater possibilities, and our vision is to become the world's trusted data platform for all participants in the risk and insurance ecosystem.

We are an award-winning, stable, and industry recognized leader in risk management and professional services, providing an integrated, risk management platform that includes comprehensive Environment, Health and Safety (EHS), Risk Management Information System (RMIS), and Governance, Risk, and Compliance (GRC) Suites.

After our 2009 founding, we first introduced our Risk and Safety Platform in 2010. In 2012, we added a P&C Claims Solution. In 2015, we expanded our offerings to include Healthcare, Enterprise Risk Management (ERM), and P&C Policy Solutions. One year later, our GRC Solution was introduced. We experienced significant growth between 2016 and 2019, allowing us to invest more deeply in our products and people.

In 2020, we deployed our EHS and COVID Suites, followed quickly thereafter by our Claims and Policy Standards Solution, which was introduced in 2021. In 2023, we acquired Dais to further support our risk and insurance ecosystem. With our continued growth and success, Origami is currently focused on deploying a variety of AI features and tools that enable our clients to capitalize on the benefits AI offers, without sacrificing compliance or introducing new risks.

Staffed with nearly 950 employees, we attract motivated, experienced talent. Origami's primary operations take place at its headquarters in Chicago, Illinois, and its UK headquarters in London. Additional offices are located in Philadelphia, Atlanta, Denver, and Dallas, and we have many employees working from remotely located home offices in nearly all 50 US states.

There is no designated regional organization around teams' functions and roles beyond the four C-Suite members being primarily located in Chicago.

- Atlanta – 110
- Chicago – 266
- Dallas -8
- Denver – 28
- London – 28
- Philadelphia – 5
- Remote – 499

Origami operates as an LLC with no parent company, serving nearly 1,000 clients across the continental US and internationally.

Origami's culture is centered around the client experience. We listen deeply, then design, deploy, and support client-centric solutions across multiple verticals.

Unlike our competitors, whose solutions are delivered across multiple platforms, Origami is built organically on a single platform.

This helps our teams stay focused on delivering and supporting relevant, tailored solutions to clients, rather than on complicated workarounds for solution gaps. created by disparate systems.

Industry's leading enterprises across multiple verticals leverage Origami on a daily basis to automate tasks, minimize errors, monitor KPIs, and lower their TCOR.

Origami was one of just 13 solutions recognized as a leader in the 2025 EHS Green Quadrant, from a pool of 300+ vendors tracked by Verdantix.

The Gartner® 2025 Market Guide also recently recognized us as a representative vendor for EHS, marking the third consecutive year of recognition.

Verdantix also recognized Origami in its 2025 Smart Innovators Third-Party Risk Management Report as among leading TPRM Solutions.

The 2024 Verdantix Smart Innovators Operational Resilience Software Report recognized Origami for strengthening operational resilience across GRC and BCM domains.

Redhand Advisors' 2025 RMIS Report recognized Origami as having the most comprehensive solution and the highest NPS of all evaluated vendors.

verdantix

"Leveraging a cross-selling approach from its RMIS and GRC platforms, Origami Risk combines EHS and RMIS functionalities . . . [and] is well-positioned to deliver innovative solutions that drive significant value for firms seeking to strengthen their overall risk management posture."

Chris Sayers, Senior Analyst

Response to Scope of Work

The table below outlines Origami's capabilities in context of the provided RFP Scope of Work. Additional details are provided in subsequent sections.

Table 1— Scope of Work & Origami's Platform

1. Fundamental Technical Objectives	Status
a. The system should provide a cloud-based solution for documenting and tracking reported hazards.	Available Today
b. The system should align with the requirements of Federal Transit Administration (FTA) 49 CFR Part 673.75 safety risk management.	Available Today
c. The system should establish a comprehensive internal employee reporting system.	Available Today
d. The system should provide a management utility for review of safety issues.	Available Today
e. The system should allow real time reporting and analysis.	Available Today
f. The system should contain safety risk assessment functionality.	Available Today
g. The system should contain safety communication functionality.	Available Today
h. The system should produce visual data charts.	Available Today
i. The system shall call out trends on visual data charts to assist safety analysis.	Available Today
j. The system should establish a comprehensive safety identification system.	Available Today
k. The system should measure safety performance information through MTS.	Available Today
l. The system should allow manual risk score calculations in accordance with risk scoring system detailed in ATT 3 - Hazard Management Master, in the assessment tab.	Available Today
m. The system should inform employees of safety actions taken in response to submitted reports.	Available Today
n. The system should convey safety risk and hazard information to stakeholders.	Available Today
o. The system should provide QR codes, Web Form, Webapp, mobile app, and other common quick access reporting utilities.	Available Today
p. The system should provide online data access and information entry capabilities to users.	Available Today
q. The system should provide the capability to upload, store and review photos, data, and various file types.	Available Today
r. The system should provide the capability to create, delete and modify safety workflows	Available Today
s. The system should provide detailed workflows and customizations to meet the requirements of various workflows as demonstrated in ATT 2 - Hazard Assessment Form.	Available Today
t. The system should be account based for roles listed in Section 5.2.3.	Available Today

u. The system should be collaborative in nature.	Available Today
v. The system should use common technical file formats and data stores (including but not limited to PDF, Email, Word, Excel, PPT, JPG, PNG, etc.).	Available Today
w. The system should allow easy data parsing by departments, responsible parties, hazards and other filters.	Available Today
x. The system should call out who is responsible for mitigating the hazards and the mitigation plans	Available Today
y. The system should integrate with MTS technology including but not limited to Microsoft 365, Intranet, SAP, GTFS, GPS, ArcGIS and ESRI.	Available Today
2. Basic Setup	**Status**
a. Setup should allow flexibility to create company specific named locations.	Available Today
b. Setup should facilitate creation of new users and assignment of roles.	Available Today
c. Setup should allow editing, deleting, and updating user information.	Available Today
d. System should also allow setting up basic user preferred configurations.	Available Today
e. Setup should allow management of administrative tasks.	Available Today
f. Setup should allow for user workspace or dashboard to be customizable and configurable on the fly.	Available Today
g. Setup should allow user workspace or dashboard to have various filter capabilities for easily parsing data.	Available Today
h. Setup should allow MTS to configure business rules and workflows.	Available Today
i. Setup should allow MTS to configure detailed reporting of Safety status.	Available Today
3. User Management	**Status**
a. System should allow the functionality to create, view, update and delete users.	Available Today
b. System should allow assignment of different roles to the system users.	Available Today
c. System employs user access control to prevent access to accounts	Available Today
d. System should allow users to login to the system after required authentication.	Available Today
e. System should be able to limit the user privileges based on the user role and assigned group in the application.	Available Today
f. A logged in user should be able to see his/her personal data and assigned role.	Available Today
4. Geo Location	**Status**
a. System should provide capability to understand GEO tagging and file location data.	Available Today
b. System should communicate where an image was captured, or the location data is pointing.	Available Today

c. System should integrate with standard ArcGIS, Esri systems and GPS data.	Available Today
d. System should offer store and forward technology for areas with limited reception.	Available Today
e. System should provide the ability to enter intersections, grade crossings, mile markers, train numbers, vehicle numbers and types of various equipment.	Available Today with Third Party Integration
5. Mobile and Web App Integration	**Status**
a. Mobile and Web Application should require authentication from users defined in section 5.2.3 before he/she can use the application.	Available Today
b. Mobile and Web Application Web Application should not require users defined as "MTS Internal Employees" in section 5.2.3 to login.	Available Today
c. Mobile and Web Application should offer "MTS Internal Employees" anonymous reporting capabilities.	Available Today
d. Mobile and Web Application should offer "MTS Internal Employees" follow up capabilities if the employee files a report with the employee's email included.	Available Today
e. Mobile and Web Application should show data in accordance with the role of the logged in user.	Available Today
f. Mobile and Web Application should have the capability to work in both Online and Offline modes, whereby online mode is defined as connectivity to the server is available for mobile app. On the other hand, offline mode is defined when server/internet connectivity is not available.	Available Today
g. Mobile and Web Application should allow technical support user to add, update and delete server information data.	Available Today
h. Mobile and Web Application should support multilingual operation. It should allow the user to select one of the desired language options.	Available Today
i. Mobile and Web Application should also show assets in geographical map mode where markers or icons shall indicate asset locations on the map.	Available Today
j. Mobile application should be available to users through the Google Play or Apple App Store.	Available Today
6. Technical Management and Security	**Status**
a. Data encryption for data in flight and for data at rest.	Available Today
b. User and Entity Based Behavioral Analytics (UEBA).	Available Today
c. 99.999% availability.	Available Today
d. Disaster Recovery and data protection.	Available Today
e. System health dashboard with real-time status on cloud infrastructure and application health down to the service level.	Available Today
f. Mitigations for current OWASP Top ten (10) Web Application Security Risks.	Available Today
7. Cloud-Native Safety Application	**Status**

a. The system is deployed and managed using Continuous Integration/Continuous Delivery pipelines (CI/CD).	Available Today
b. Separate Test, Training and Production cloud tenants/environments.	Available Today
c. Self-service configuration management.	Available Today
d. Change & Release Management.	Available Today
e. Advanced release notice with release notes including new features and/or changes.	Available Today
f. Product feature update and defect fix history.	Available Today
g. Gated feature/change deployments with traffic control.	Available Today
h. Cloud services will utilize a high availability service like Azure, GCP or AWS.	Available Today
i. Offline capabilities, allowing the user to continue their work in a cached state that will automatically sync once they are back online.	Available Today
j. Offline capabilities, allowing users to use the application as intended without having access to network services.	Available Today
8. Business Intelligence Dashboards and Reporting	**Status**
a. Integrates with or includes web-based business analytics and visualization tools that deliver dynamic reports and real-time dashboards of data.	Available Today
b. Integrate with SDMTS owned Microsoft Power BI and SQL Server Reporting environments.	Available Today
c. Generating reports for the purpose of printing and/or exporting to PDF.	Available Today
d. Event and History that includes location history, logon and logoff times, etc.	Available Today
e. Runs reports on Hazards.	Available Today
f. Runs reports on Mishaps.	Available Today
g. Runs reports on Safety Corrections.	Available Today
h. Runs reports on Near Miss Incidents.	Available Today
i. Runs report on action items.	Available Today
j. Runs ad-hoc reports on underlying data sources.	Available Today
k. The system will make our analytics data available for MTS use and access through a repository or data warehouse.	Available Today
l. Historical GPS location information, the ability to playback or show locations of report creation.	Not Feasible; please see the Technical Exceptions
9. User Interface	**Status**
a. Personalized Sticky graphical user interface (GUI).	Available Today

b. Multiscreen configuration, allowing users to easily multitask.	Available Today
c. Responsive/flex/fluid application that adapts to any screen size.	Available Today
d. Runs on a modern browser Chromium version 110 or higher for both Microsoft Edge and Google Chrome.	Available Today
e. Progressive Web App (PWA) support providing a native application experience.	Available Today
f. Active application handoff experience between clients (such as transition from workstation to mobile device or transition from console to laptop, etc.).	Available Today
g. Basic printing capabilities.	Available Today
h. Keyboard shortcut keys & customizability.	Available Today
10. Documentation	**Status**
a. Planned Design	Available Today
b. As-Built Design	Available Today
c. User Guides	Available Today
d. Administrator Guides	Available Today
11. Forms or Customization	**Status**
a. The system meets all of the requirements to support ATT 2 - Hazard Assessment Form.	Available Today
b. The system meets all of the requirements to support ATT 3 - Hazard Management Master.	Available Today

Solution Overview

Public risk and safety professionals face complex and dynamic landscapes as they work to protect employees' health and safety, improve reporting metrics, reduce and mitigate risks, stay compliant, and remain agile to respond to what comes next.



Employee shortages, training gaps, and rapidly advancing AI further complicate challenges and demand better and more standardized data.

As a result of these and other challenges, an increasing number of leading organizations are adopting enterprise risk management technology to ensure they are prepared, adaptable, and accountable.

Origami supports 200+ government entities' unique challenges to foster a better risk and safety culture. Origami's platform will be MTS' command center for your Safety Management Solution (SMS).

Providing safety management solutions to our clients since 2020, we can support MTS in every category identified in the scope of work.

The solution's no-code, flexible configurability enables rapid adoption with easily tailored fields, labels, forms, and mappings. MTS will be able to easily operationalize the incident lifecycle from initial intake to root cause analysis

- Track internal and external inspection and audit results in one system
- Socialize found insights to promote safe and compliant objectives with flexible dashboards
- Leverage advanced analytics from Power BI directly from your instance
- Perform audits and inspections from the field with Origami Mobile
- Capture and report on leading indicators to improve workplace safety
- Transform your culture from reactive to proactive, letting safety support operational excellence
- Extend and seamlessly connect to a suite of Integrated Risk Management Solutions

Our webinar explores why diving into untapped safety data leads to better visibility into root causes, corrective actions, and incident trends.

Incident Management

From initial details collection to the analysis of change management, Origami transforms the way teams report, track, and respond to incidents.

Origami streamlines the collection of any type of workplace event, including safety incidents, near-misses, hazards, theft, and injuries.

Incident types can be configured based on MTS' unique needs. Incident entry forms are also completely configurable by type, capturing data such as affected employees, locations, event descriptions, causes, impacts, and more.

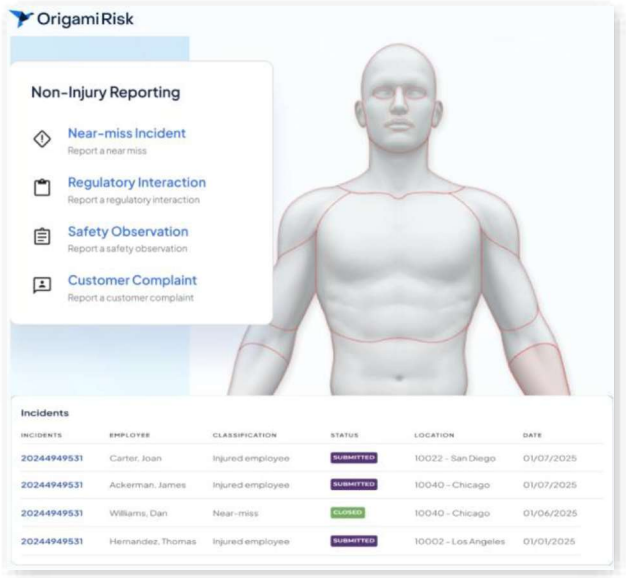

- Report events, accidents, injuries, and near misses quickly and accurately, regardless of where they occur
- Leverage flexible intake methods for authorized users include a secure online portal, mobile app or QR Codes
- Deploy an optional anonymous collection portal with the ability to leverage QR Codes
- Upload supporting documents, photos, and videos, ensuring comprehensive detail from the moment of incident entry
- Quickly configure incident forms, including required fields, dropdown lists, and dynamic fields
- Integrate with third-party systems to reduce data entry
- Automatically alert designated stakeholders and assign actions
- Request additional information via granted access, email, or text
- Automatically report recordable cases to OSHA
- Utilize role-specific dashboards for corrective actions, assessment assignments, or other tasks

Within Origami, an enterprise Incident Management Dashboard visualizes incidents by location, by quarter, volume of events, heat mapping, causes, roles, timeframes, or any other system criteria Expeditor would prefer.

Our Solution Showcase demonstrates how Origami enables transparency, accuracy, and faster incident resolution times.

Audits & Inspections

Origami's Audits & Inspections Solution enables safety professionals and workers to proactively conduct equipment, asset, building, and process audits via a web browser or the Origami Mobile App.

This empowers safety teams to identify risks and hazard early and put measures in place to prevent incidents and injuries before they occur.

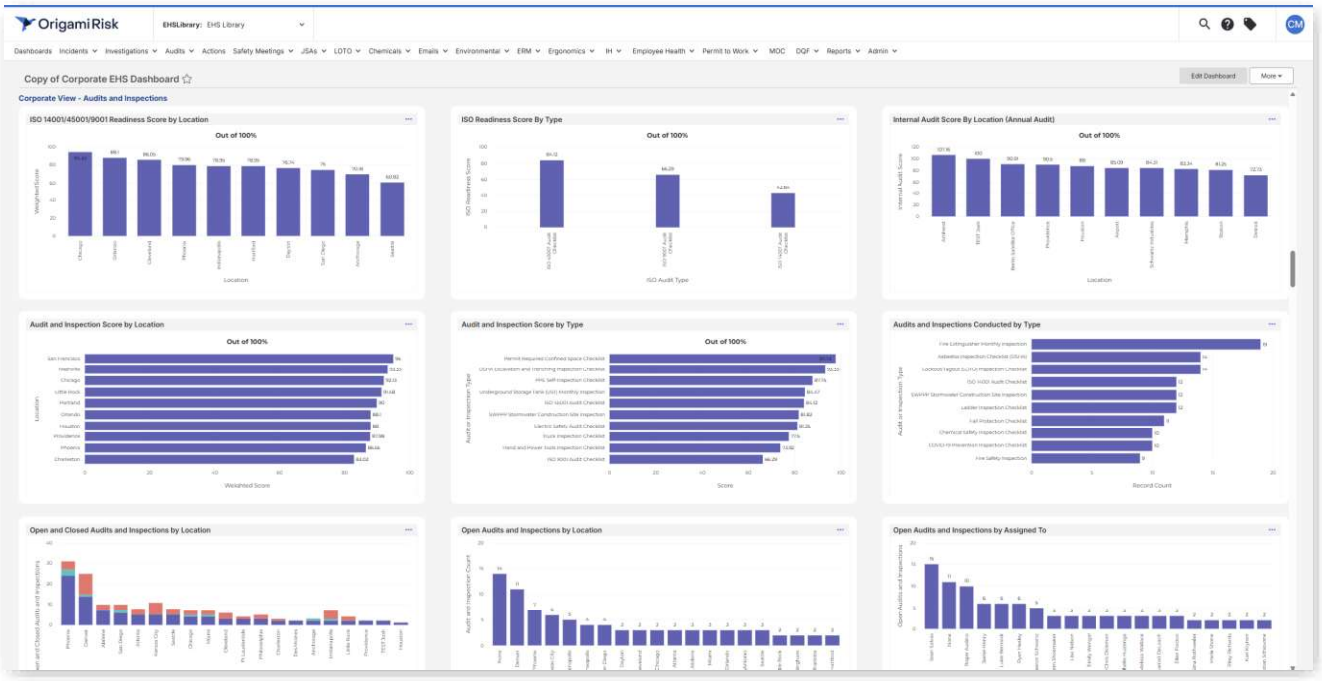

MTS will be empowered to act on-site, reducing time-consuming administrative activities and ensuring risks and hazards are captured in real time.

- Any employee or contractor can conduct audits by scanning a QR Code or using Origami Mobile (see below)
- Ensure proper follow-up from findings by assigning corrective actions to the right people as audits and inspections are conducted
- Employees, locations, and other data types can be easily looked up and prepopulated, saving valuable time
- Schedule and assign audits to be completed at designated frequencies and tie metrics to other system data, such as incidents and claims
- Manage lengthy, unruly regulatory audits by assigning users questions or sections to complete based on job role or location
- Easily track audit progress, assess status, communicate findings and create detailed reports; track key metrics such as audit scores, completed, or open audits

Mobile App

Origami Mobile is our award-winning app. It will accelerate MTS' risk management approach, providing employees with an intuitive tool to capture data, stay compliant, save time, and improve reporting.

- Supports audit, inspections, observations, and incidents
- Offline functionality
- Easy form creation, customization, and searching
- Image annotation and uploading
- Voice-to-text
- Corrective action plan triggers
- Intuitive error flagging
- Expandable/collapsable categories to easily find questions

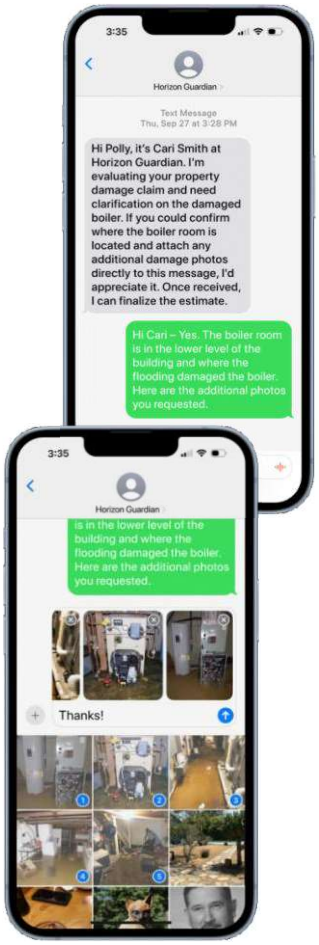

Origami Mobile helps discover incidents on site, at the right time. MTS will be able to respond to incidents early and avoid potential financial, claims, or reputational impacts.

- Gain transparency on incidents
- Understand associated costs
- Conduct intakes in in real-time, even with no internet connection
- Intervene earlier
- Report more effectively

Two-way text features streamline incidents communications, with real-time, bi-directional communication and transfer of photos, videos, audio to:

- speed evidence collection and retrieval;
- facilitate better team collaboration;
- see real-time message read statuses; and
- retain full control of chosen phone numbers.

Bright Horizons

"Origami Mobile has delivered a streamlined experience that simplifies and enhances the audit process at our facilities. Its user-friendly interface and modern performance save us valuable time and ensure accuracy of the safety data we are collecting from our centers."

Dana Brainerd,
VP of Global Safety

EHS Risk Assessments

Many safety programs adequately recognize risks but remain challenged to effectively address them. Without a structured follow-up process, even the most well-intentioned assessments can lose momentum.

Closing the gap between assessment and actions requires a strong platform, connected workflows, and a shift in how risk data is leveraged.

Our EHS Risk Assessment Solution is designed to help safety teams take a proactive approach to reducing incidents and advancing safety at the enterprise level.

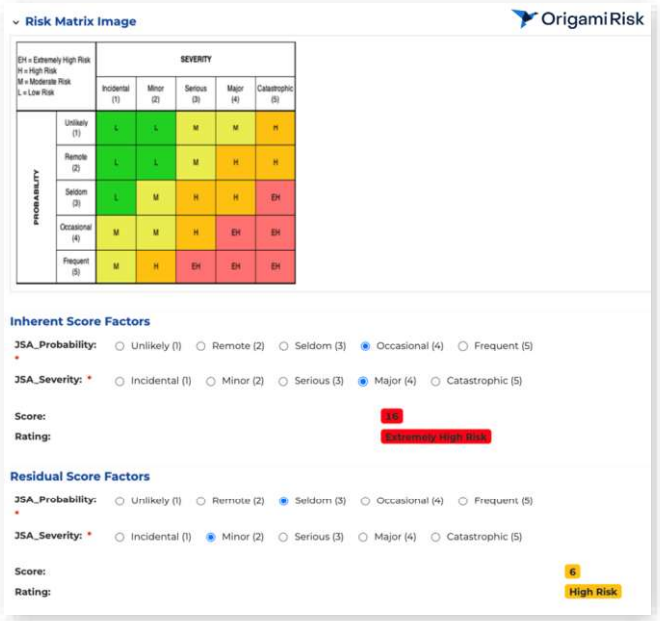

EHS-focused risk assessments will help MTS assess risks and develop controls, proactively preventing incidents and injuries. Watch the solution in action.

The solution is designed around a bottom-up, field-level approach and offers standards for audits, incidents, and JSAs.

- Manage operational risk and prioritize the greatest risks and hazards to ensure proper controls are in place
- Strengthen collaboration between EHS teams and broader organizational risk management
- Leverage better metrics, enhance visibility to demonstrate program success or resource gaps
- Assign assessments or controls based on inherent and residual risk (e.g., severity, frequency/velocity, probability)
- Analyze efficacy of risks and controls on reduction of residual risk
- Take action with workflows and notifications based on risk thresholds
- Roll up to enterprise risk and executive level reporting

Our blog describes the six key stages for ensuring assessments lead to action and ultimately a safer workplace.

Watch Origami's on-demand webinar to learn how effective risk assessments can help prevent incidents and injuries, and how platform tools can improve safety protocols and drive continuous improvement.

Corrective & Preventive Actions

Origami automates the assignment of corrective actions and preventative actions (CAPAs). Action tracking capabilities are built into workflows enable actions to mitigate risks, improve performance, ensure compliance, and drive positive organizational change.

Actions could be the result of incidents, investigations/RCAs, inspections, assessments, observations, and/or compliance requirements. Corrective actions can also be assigned to a particular regulation when evaluating overall compliance.

When creating corrective actions, users can select from a list of default corrective actions based on the question. The selection can prepopulate other fields on the corrective action form, standardizing recommendations and enabling impactful reporting.

Audit findings can be addressed automatically or configured based on the intended workflow/notification structure for an organization. Origami provides several ways to take action. For example, corrective actions can automatically be assigned to a respondent or team based on the audit answer or severity. These can also be rolled up to an overall action plan for completion.

Origami's workflow capabilities also allow specific instructions or "next steps" to occur based on a response. These notifications automatically trigger via an SMS text, app message, and/or alert for prompt actions.

Root Cause Analysis

Origami enables dynamic and rapid organizational learning through streamlined Failure Mode and Effects Analysis (FMEA) and Root Cause Analysis (RCA) tools.

- Leverage in-built 5-Whys
- Automatically create Fishbone Diagrams
- Document problems, collect details, and link to parent incidents
- Document contributing factors and the event timelines
- Connect tasks, notes, emails, and files
- Leverage configurable workflows
- Track RCA progress and corrective actions via dashboards

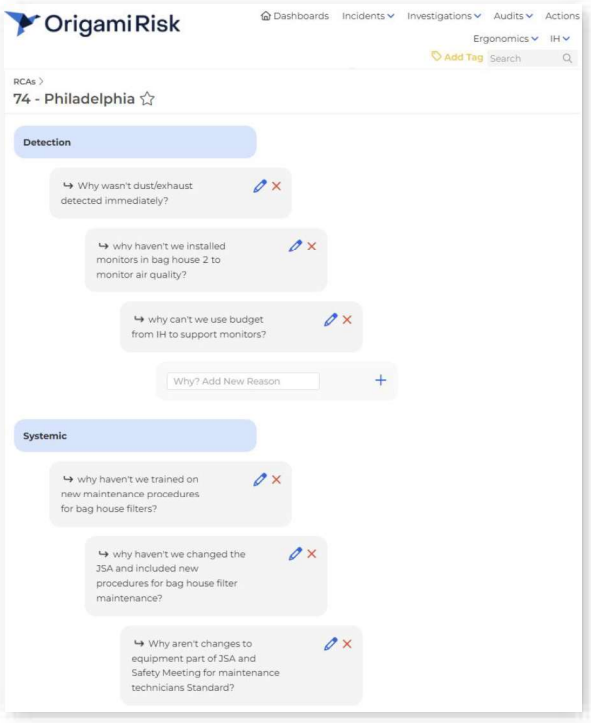

The Origami Platform

Origami provides a simplified, consistent UI and UX that enables rapid adoption, better collaboration, and trust across teams—ranking #1 in system attributes and satisfaction. Demonstrating our commitment to continuous innovation, Origami recently released a completely refreshed UI.



Optimize UX—save time for high-value tasks with Origami's intuitive account-level governance, user management, and friendly, flexible layouts

Prioritize—fully capture risks from every level, conduct effective analyses, and build action plans

Configure—easily manage dashboards without the constraints and dependencies of broader or disparate infrastructures

Connect—deploy seamless, countless, secure API integrations, or leverage traditional feeds

Relate—make data relevant, reduce technical debt, and capitalize on easy configurability for any type of operations

Report—leverage standard, ad hoc, and custom reporting and analytics, gaining drillable insights across your programs, teams, and locations

Share—automatically distribute critical information in simplified, visually impactful formats

Update—enjoy a no-code approach and problem-free updates

Adapt—stay agile with a platform that enables rapid adjustments and continuous innovation to meet unique business needs

Scale Safely—safeguard your data and trust with our industry-standardized, secure, redundant, and scalable hosting services

Unleash AI—enhance efficiency with AI-driven automation, and distill data quickly with AI processing and insights

Work Smarter, Not Harder—improve efficiency and eliminate bottlenecks with no-code, drag-and-drop tools to automate workflows and integrate seamlessly with your other applications and systems

Modernize Data Management—make better decisions by easily importing and managing data with AI-powered field mapping and near real-time data, eliminating batch processes

Our blog explores how Origami's AI functions enable agility for high-risk industries.

Dashboards & Reporting

Robust analytics and reporting are available across all Origami's Modules. More than 100 standard report templates are offered, along with an ad-hoc report designer and the ability to use all reportable fields as modifiers—easily turning templated reports into custom reports.

- Schedule individual reports or report packages
- Distribute reports to specified groups
- Apply coverage and location security
- Review summary level reports as well as drilldown to the precise details
- Export to Excel, Word, or pdf
- Create reports based on a triggering event
- Respond to interactive questions to filter report data
- Create reports from scratch using simple report design features
- Conduct advanced analytics, and more
- Create and adapt a wide variety of visualizations
- Integrate with BI Tools if desired, including Tableau and Power BI

Role-specific dashboards help drive accountability and ensure tasks stay on track. The platform offers user friendly capabilities to adapt any reporting content, and control access and visibility based on a user's role. This further enhances the ability of administrators or leaders to consider trends and run reports that may be relevant to stakeholders.

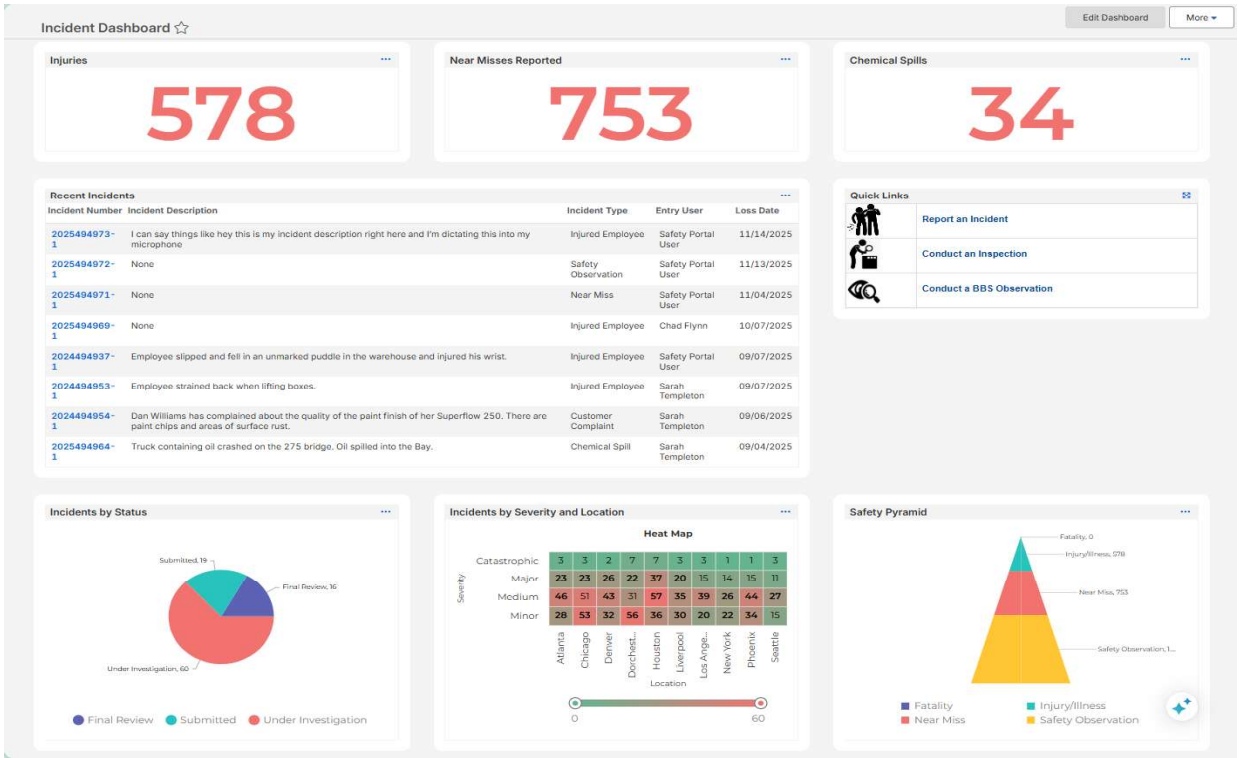

Dashboards can be viewed via MTS' intranet page or on employee-facing public monitors (e.g., a break room). They can provide safety-related data/information and can also include a widget for scrolling text and critical announcements. Public dashboards can be made available via URL link or QR Code.

Advanced Trends Capabilities

Dashboards across the entire Origami Platform help users have immediate visibility into critical processes, the point in time for review processes, and other valuable metrics. These can all be visualized in different types of charts and graphs.

Within Origami, KRIs will help MTS anticipate, prevent, and/or mitigate potential future risk events that could impact meeting objectives. KPIs will measure current performance against a goal or objective over time.

MTS will be able to link KRIs and KPIs to risks, processes, and other key data by defining indicators, setting target thresholds, creating user notification workflows, and creating issues when thresholds are reached.

- Home page dashboards with executive KPIs
- Benchmarking widgets can be added for direct trend comparisons
- Real-time and point-in-time accurate reports on frequency and severity
- Context specific reports that can be added on forms
- Easy configurability to create MTS-specific data sets
- Risk Assessment KPIs include total number of risks identified in a period; risk exposures and the potential impact of identified risks; average time taken to respond to an incident, and more

Origami's trend notification feature can be leveraged to deliver automatic and real-time alerts based on MTS-defined criteria that exceed any defined threshold. Any combination of data points can be included in trend notification rule that is managed from an administrative dashboard.

MTS will be able to set up trend reports for incidents and events and designate the key criteria important to your stakeholders. The reports can be scheduled for sharing according to any timeline or milestones desired. If desired, your trend reporting can be based on particular roles.

Users, Roles, Workflows & Configurations

Origami's sophisticated workflow/task management supports a full workflow process to include intake, assignment, approvals, denials, escalations, and more, for all areas of the system.

Typically, user permissions drive who can track progress of workflows at each step. Users can manually create and assign tasks from within the system or tasks can be created and assigned automatically via configurable workflows. Since workflows can be setup for any record type in Origami, the permissions that a user has access will drive what workflows they can track. Dashboards can be set up to monitor the overall progress of workflows as well.

Forms, Fields & Workflows Customization

Origami is a highly configurable solution that will enable MTS' administrators to tailor the platform to meet your unique requirements. During implementation, Origami will provide an initial configuration for MTS. Once live, your administrative users will have access to many of the same tools used by Origami to make ongoing changes.

A built-in rules engine prevents incomplete or incorrect data from being processed. Your administrator will set basic data validations and exceptions for anomalies, and configure notifications based on any information/missing information. Fields can be tagged as required and the application will prompt users for missing information on required fields upon save.

These tools are available within the Administration Module and are easy to use; no custom coding or technical experience is required. In-app help is always available, and MTS will also receive formal System Administrator Training and full product documentation. This documentation is available 24/7 directly from the application's UI.

Role-based Access Control

User accounts are created and maintained within the Administration Module of Origami. The entire application is designed around robust role-based access controls (RBACs). MTS will be able to control users' access to all areas and features of the system, including reports and dashboards, using both system roles and access groups; logins may be associated with both roles and data access groups.

Roles can have view, create, edit, and delete permissions specified by area. There is no limit to the number of roles that can be created. Examples of roles include administrative user, incident only user, check approver, view only user, etc. Groups prevent users from accessing data they do not have permission to access, based on locations, business units, major coverages, contacts, files, notes, emails, templates, and more.

Integration Capabilities

Our proposed solution includes integrations listed in your Key Objectives, including GPS, ArcGIS and ESRI, and Power BI. Integrations are also available for common SAPs, LMSs, HRISs, ERPs, other systems. We look forward to learning more about these requirements from MTS.

Origami was built to limitlessly integrate with third-party applications without the need for custom development. Origami's API centralizes data into one system through native connectivity between our platform and other information ecosystems. This enables real-time data flow, error-free workstreams, and confident decision making.

Origami incorporates an extensive library of integration templates designed to capitalize on our experience in developing more than 700 integrations and to streamline the implementation and testing process.

Additional details are included in the Work Plan Section.

Multi-Language Support

Origami's Mobile solution has out-of-box language options for American Spanish and French Canadian. Our AI-powered email assist feature supports multilingual capabilities, including translations into German, French, and Spanish. We plan on adding additional languages soon.

While the default desktop app language is English, Origami provides support for most languages, including those that require extended or double-byte characters. We can translate aspects of the system (field labels, dropdown values, custom content, mail merge documents, etc.) into other languages. Localization options extend to data entry forms and workflows for specific regions. We do not support preferred language selection. MTS would need to provide the translated content for non-UI elements.

Cloud-Hosting & Security

Origami is offered exclusively as a Cloud-hosted Solution. MTS will benefit from built-in security, backups, and continuous patching and updates, helping reduce drag on your internal IT teams and save resources.

Scalability

Origami is a scalable solution hosted by Amazon Web Services (AWS) that accommodates a high volume of concurrent users, providing robust processing power. AWS' data center architecture is highly elastic and allows for increased hardware resources on demand. Additional processing resources are deployed automatically when needed. A cluster-based architecture also enables optimal availability.

Security & Compliance

Origami has robust Information Security program, policy, and procedures, and is subject to annual SOC 1 Type II and SOC 2 Type II audits. Origami aligns with the NIST framework and FedRAMP requirements. We leverage AWS hosting to ensure clients benefit from the highest standards in data security. AWS is extensively certified. Origami data centers follow the AWS shared responsibility model backed by their data center controls.

We have attached an Information Security Program Overview document for your team's reference.

Disaster Recovery & Business Continuity

Origami leverages primary and backup AWS' data centers, which are highly redundant and reliable. Backups are stored off-site via AWS S3, which stores objects across multiple devices and availability zones; it has multiple redundancy and 99.999999999% durability and 99.99% availability of objects over a given year.

Full backup and DR services are included in our proposal for MTS. The environment is deployed across multiple zones in AWS US East Zones (primary and secondary DBs (active/passive)), with automatic failovers across zones. Failovers are tested on a regular basis. Automatic snapshots are backed up to AWS S3 (US West).

Origami has robust Disaster Recovery (DR) and Business Continuity (BC) Plans in place. They have clear owners and are reviewed and updated at least annually or in the event of a major change. The plans are considered private and are not shared externally.

Contractual Performance Standards

Origami's SaaS is available 99.9% of the time, excluding unavailability as a result of any excluded event. This includes holidays, weekends, and non-business hours. It does not include planned downtime. Under normal circumstances, Origami will schedule downtime between 9:00 p.m. Eastern Standard Time (EST) and 2:00 a.m. EST, with an aim for such downtime to occur on weekends. Origami publishes uptime metrics, including scheduled maintenance for our clients, at the following link: https://status.origamirisk.com (login credentials are required). We have never defaulted on a contract due to lack of availability.

Encryption

Data at rest are subject to persistent encryption and secured using the native encryption services provided by AWS. For highly sensitive data, Origami may employ additional symmetric or asymmetric encryption on top of the native protocols. Data in transit is encrypted throughout its lifecycle using protocols to protect it as it moves through applications (Transport Layer Security (TLS) and Secure Shell (SSH)).

Audit Trails

System administration settings within Origami allow for an optional audit trail to be enabled. Audit trails capture a complete history of every change, including who made the change, when the change was made, the historical value, the new value, when a record was viewed, and by who. User activity datasets can be analyzed with system reporting tools.

B. Financial Condition

Origami is financially sound. There are no known conditions or issues that will impede our ability to provide services to MTS.

MTS can have confidence in our financial stability and our ability to invest proactively for growth. As a privately held company, majority owned by our management, Origami answers only to our clients. We are growing steadily and making strong investments in our products and people.

Please see Origami's completed Financial Questionnaire Form below.

C. Firm Experience

Approximately 20% of our client base is comprised of government and public entities, including Sacramento Regional Transit District, Orange County Transportation Authority, Texas, Ohio, Illinois, and Iowa Departments of Transportation. We also serve 20+ state agency clients, and the Cities of Sacramento, Riverside, and Portland, OR, among other municipalities. Origami currently has dozens of privately held transportation and logistics clients.

Our experience has led to a solid understanding of the unique governance, legal, and regulatory landscapes that public entities and their employees must navigate.

Record of Meeting Similar Agreements

Origami has the required credentials to deliver MTS' requested services. The linked case studies reflect our performance standards.

King County Metro—transformed Seattle's multifaceted transit system safety program, with better tracking, reporting, and automation of incidents, investigations, meetings, and awards processes

Pima County—cleaned and consolidated spreadsheet data from 43 departments to streamline incident reporting and track claims, fleets, and employee health

PERMA—leveraged Origami's configurability to streamline claims administration, enhance communication, and automate processes

State of Delaware—increased claim team's efficiency with standard and non-standard claims

Our case studies for Compass Group, Fenix Marine, and Boise Cascade also provide insights into successfully deployed safety management systems.

King County METRO

"Having all of our safety information in one place—instead of manually entered into multiple systems—is revolutionary. We now have instant visibility into incidents and the ability to follow up with operators. People at our organization know that when they submit items, action will be taken.

Alex Zastrow, Safety Data Analyst

PERMA

"Moving to Origami gave the team access to reporting which has fueled a cultural change for more line of sight and understanding . . . making our work more efficient and improving culture and morale."

Christine Southworth
Director of Claims Operations

Client References

Please see the details provided contacts within Section E. Status of Current and Past Contracts Form.

Personnel Participation in Projects

Due to the high volume of solicitations we receive, and to protect the privacy of our team members, Origami does not name particular staff as part of RFP responses.

At kickoff, we will assign the most relevantly experienced colleagues to MTS' project and provide information about their experience serving similarly situated clients by request.

D. Subcontractors

Origami is the prime contractor for the proposed work. We will not utilize subcontractors.

Our hosting services are provided by Amazon Web Services (AWS). They are not considered subcontractors but are noted as subprocessors in our standard agreements. Please see our Trust Center for a full list of subprocessors.

E. Status of Current and Past Contracts Form

Two references are provided below. Origami will provide additional references at a future point in the process.

STATUS OF CURRENT AND PAST CONTRACTS

Proposers shall list the status of **at least three (3)** current and past contracts where the subject scope of work has been performed within the past five years.

Proposer shall provide an accurate contact name, telephone number, and email for each contract, the terms and scope of the contract, the original contract value and if the contract has been completed or is still in progress. The Proposer must also indicate if the contract was terminated by either the procuring agency or by the Contractor for cause or convenience. If the contract was terminated, list the reason for termination. Identify and state the status of any litigation, claims, or settlement agreements related to any of the contracts.

REFERENCE NO.1

Company Name:	Kentucky Transportation Cabinet
Point of Contact:	Jon Lam
Phone:	270-303-0357
Email:	jon.lam@ky.gov
Project Award Date:	2022
Original Contract Value:	~$330,000
Status of Contract:	Renewed 2025

A. Terms and Scope of Contract

Software-as-a-Service for Environmental Health and Safety

B. Identify Claims / Litigation or Settlements Associated with each Contract:

None

REFERENCE NO.2

Company Name:	San Bernardino County
Point of Contact:	Paul Kiehl
Phone:	(909) 386-8710
Email:	pkiehl@rm.sbcounty.gov
Project Award Date:	2023
Original Contract Value:	~$1,650,000
Status of Contract:	Current; 2025 EHS Amendment

A. Terms and Scope of Contract

Software-as-a-Service for Risk Management Information System and Environmental Health and Safety

B. Identify Claims / Litigation or Settlements Associated with each Contract:

None

Proposed Staffing, Organization, and Management Plan

A. Qualifications of Proposed Staff

Origami employs highly experienced individuals to work with our clients—the average Origami service member has 10 years of experience in the risk management industry. Our team members have an ideal blend of business knowledge and technology expertise to deliver solutions that fully meet our clients' objectives. Many are certified in their respective professional fields and hold multiple degrees.

Origami's professionals not only have the expertise and experience to handle the highly complex needs of our clients but also have the autonomy and decision-making authority to always do what is best. We do not have multiple layers of management or silos of departments that must be consulted in order to provide a response or solution.

Origami's in-house expertise offers significant strategic and operational advantages. Our dedicated team manages the project from start to finish, ensuring consistent execution, full control over scope, timeline, and quality, and customization aligned with your goals. This approach fosters deeper internal knowledge, long-term self-sufficiency, and clear accountability.

B. Resumes

As noted above, due to the high volume of solicitations we receive, Origami does not pre-commit particular staff as part of RFP responses. At kickoff, we will assign the most relevantly experienced colleagues to MTS' project and provide information about their professional backgrounds by request.

Of our ~940 employees, more than 300 of our employees work in professional services, and 130+ work in client success, reflecting our commitment to the client experience and quality implementations. Each assigned Implementation Leader has a reasonable load of projects to manage at any given time, allowing them to devote the necessary attention to each of our clients.

The attached Sample Implementation Plan illustrates the roles, responsibilities, and tasks that will be undertaken by Origami on MTS' behalf.

Information about the following team members is meant as a sample of our staff's expertise for your team's reference.



Mary Turner, Service Delivery Manager—Mary has worked in risk management SaaS for more than 20 years. She has led implementations for high-profile clients like Google and Amazon. Mary partnered with Google to successfully deliver a complex, global solution for claims and policy tracking and unique financial tracking to manage guarantee needs. Prior to joining Origami, Mary worked as a Solution Architect at Riskonnect for five years, where she specialized in risk management implementations, and in implementation and support roles at CS STARS. Mary holds a Master of Science Degree in Information Systems from DePaul University.



Angie Boyd, Senior Implementation Lead—Angie brings more than 25 years of experience working in the insurance tech industry, offering a wealth of industry knowledge, project leadership strategy, and data transformation acumen. Angie directly oversees the successful implementation and optimization of Origami's RMIS, with a particular focus on claims administration, leveraging her deep understanding of the claims lifecycle and associated regulatory requirements. Prior to joining Origami, Angie served as Project Manager at CS STARS.



Robin Shih, PMP, Project Manager—Robin is an experienced and passionate project management professional focused on implementing technology and client success. Robin has been with Origami for more than 10 years. Prior to joining Origami, Robin worked as Senior Project Manager at CS Stars, as well as at Corporate Systems as an Implementation Executive. Robin holds Bachelor's Degrees in International Economics, German, and Mathematics from the University of Texas at Austin. She is certified by the Project Management Institute as a Project Management Professional.



Peter Morrical, Implementation Analyst—Peter is an experienced Risk Management SaaS professional with more than nine years of experience in the RIMS industry. At Origami, Peter is responsible for overseeing client implementations, delivering sophisticated solutions, and providing ongoing support and service. Peter holds a Bachelor's in Business Administration with a concentration in Information Technology Management from Saint Louis University's Richard A. Chaifetz School of Business.



Jay Vines, Senior Technical Consultant—Jay has more than five years of experience within insurance and tech. At Origami, he is responsible for working on client implementations with a focus on designing and building solutions to meet a variety of technical onboarding requirements. Jay previously worked for Asurion, where he was involved in product and software engineering, QA Automation, eventually taking a developer role. Jay is experienced in frontend development, specializing in JavaScript, SQL, React.js, and GraphQL. Jay has a Bachelor of Science Degree in Business Administration and Economics from Samford University.



Courtney Vetter, Data Consultant—Courtney has more than 20 years of experience designing and executing business solutions for risk and insurance professionals. As a skilled leader, Courtney adeptly oversees client-tailored implementation design, data integration, and data clean-up services. Since joining Origami, Courtney has supported implementations across almost every industry to implement Origami's RMIS. Notable organizations include the US Forest Service, Turner Construction, HEB Groceries, and J.B. Hunt. Prior to joining Origami, Courtney worked with CS STARS in a variety of roles, including as Manager of Data Operations. Courtney is a graduate of the University of Kansas.



Christian Schiavone, Account Executive—Christian is a skilled senior leader in risk technology with more than 20 years of experience in revenue generation, client services, and product development. He leads scoping and discovery for several high-profile claims administration, leave management, and policy/program projects at Origami, helping clients maximize value and stay aware of industry best practices. Prior to joining Origami, Christian worked at Aon as a Senior Project Manager, at CS STARS as an Account Manager, and at Hewitt Associates as a Delivery Manager. He is a graduate of Eastern Illinois University, holding a BS in Business Administration and Management and a BA in French Language and Literature.



Sharon Smith, Client Success Manager—Sharon is an accomplished senior leader in risk technology with more than 20 years of experience in account management, software support, system consultations, and client services. At Origami, she drives system adoption and adeptly resolves client issues. Sharon has overseen several notable accounts, including Uber, DHL, UPS, and Nordstrom. Previously, Sharon worked at Aon as an Account Manager and as Vice President of CS STARS. Sharon has a Bachelor's in Business Finance from Drexel University.



Angela Isley, Technical Success Manager—Angela has more than 15 years of experience in account management, risk data analysis, and claims adjusting, encompassing implementation and support of RMIS systems. At Origami, Angela leverages her industry knowledge and experience to serve as a best-practice technical resource for clients. Prior to joining Origami, Angela served as a Senior Account Manager with Risk Sciences Group, overseeing the implementations. Angela has a Bachelor's Degree from Illinois State University and holds AIC and ARM designations.



George Castro, Client Success Analyst—George is a data-driven, technically skilled professional. At Origami, George works alongside clients to ensure outstanding technical support and to develop innovative solutions unique to each client. Prior to joining Origami, George worked as a Business Intelligence/Database Analyst at Shure. He engaged cross-functionally with customer success and digital teams to recognize e-commerce sales trends and create comprehensive KPI dashboards. George also leveraged SQL queries to automate processes across sales and marketing Cloud structures. George has a Bachelor of Science Degree in Business Analytics from the University of Illinois at Chicago.

C. Key Personnel Proposed

As noted above, Origami does not pre-commit particular staff members when we participate in RFPs. Our proposal encompasses all service categories from the Scope of Work. We will not be leveraging subcontractors.

As part of our proposed solution, MTS will have the assigned resources listed below during the Implementation Phase and over the term of your relationship with Origami. These dedicated Origami Team members will:

- promote best adoption, engaging at key touch points
- assess your success and ROI with metrics;
- mitigate risks and advocate across Origami as needed;
- collaborate on opportunities to expand the value of your solution;
- guide renewal processes and manage commercial terms; and
- offer strategic vision.

Implementation Resources

Service Delivery Manager—provides delivery governance, serves as an escalation point, assigns resources, monitors client satisfaction

Project Manager—owns, updates, and drives schedule and tasks, provides oversight on hours/budget; delivers updates and visibility to stakeholders

Implementation Lead—serves as the primary point of contact for MTS in active implementations and leads the team through project execution, outcomes, and deliverables

Technical Consultant—ingests solution design, configures deliverable, conducts testing and QA, applies feedback

Data Consultant—drives data mapping/transfers, and UI set up

Implementation Analyst—builds, tests, and deploys configurations and solutions in-line with best-practices, defined standards, and quality expectations

Relationship & Account Management

Account Executive—translates strategic objectives into actionable plans, may include system capabilities, workflow optimization, and use case guidance captured from successful implementations

Client Success Manager—drives long-term success for MTS by maximizing solution adoptions and value, developing close partnerships, and resolving client inquiries and requests

Client Success Analyst—contributes to the successful management of MTS's project, combining support of the relationship and technical delivery

Technical Success Manager—drives technical health, scalability, and stability; provides incident/request resolution, technical escalation, and best practices approaches

Post Go Live, your dedicated Focused Coverage Team (FCT) members will manage service requests and incidents, while engaging proactive success activities to ensure continuous improvement and satisfaction. Over the term, your FCT will be available by phone Monday through Friday, from 7 a.m. to 7 p.m. CST. Requests for support can be submitted 24/7, and after-hours support will always be available to MTS for unexpected, priority issues.

D. Organizational Chart

Please see Appendix C for an organizational chart. Assigned tasks per role are outlined in detail within our attached Sample EHS Implementation Plan.

E. MTS Consent for Staff Removal or Replacement

MTS should be aware that Origami continuously defines, assesses, and mitigates all internal and client-related services and support risks. Our teams are deeply staffed. When turnover occurs on any team assigned to support MTS during the term of your agreement, we have processes in place to ensure uninterrupted schedules for project deliverables and continuity of relationship management.

F. Staff Recruitment, Education & Training

Qualified Staff Recruitment

As per the RFP instructions, please see Appendix D - Recruitment of Qualified Personnel for information about our recruitment of qualified personnel.

Education & Training

Origami purposely invests in its people and in our organized, multi-faceted professional development, growth, and training programs.

Our HR Department has annual promotion targets, which we achieved consistently, leading to exemplary employee retention rates as compared to other industry peers. A structured career path program is deployed, and employees are encouraged to leverage defined paths across our entire organization based on their education, skill sets, career history, or future aspirations. This encouragement comes in the form of a dedicated SaaS product for logging and tracking goals and actions, routine one-on-one meetings with managers who dedicate time to growth topics, and overall company communications.

Internal mentorship programs have been in place for several years. These are organized around connecting employees within the same teams or across multiple teams for learning opportunities or to provide support with unique workplace challenges. Routine meetings are scheduled and mentors who sign-up for programs are provided with resources and participate in unique mentorship groups with peers.

Origami also invests heavily in our internal learning program "Origami U," which provides on-demand access to a wide variety of professional, product, technology, leadership and people skills training courses, supporting documentation, and suggested external resources.

Team leaders have additional training opportunities and events throughout the year to not only improve their own leadership skills but to help their direct reports take advantage of these company programs and/or identify areas for continuous growth they would like to pursue.

Additionally, all Origami employees have the opportunity to submit requests for reimbursements for external professional development courses, college credits, and/or professional membership organization and certification fees.

Drug and Alcohol Testing Procedures & Policy

Origami has a longstanding commitment to provide a safe and productive work environment. Alcohol and drug abuse pose a threat to the health and safety of employees and to the security of our equipment and facilities. For these reasons, Origami is committed to the elimination of drug and/or alcohol use and abuse in the workplace.

To support these objectives, we have established, regularly review and update, and disseminate a formalized Drug-Free Workplace Policy to all employees. Violation of this policy results in disciplinary action up to and including termination.

Work Plan

A. Meeting MTS Objectives

Approach & Philosophy

Like MTS, Origami is committed to providing outstanding services to our clients.

Backed by their experience and industry expertise, Origami's Implementation Team will ensure the planning, design, and deployment of MTS's solution is executed with as little disruption as possible, and that all objectives are realized in a timely and budget-wise manner.

Many Origami clients have noted struggles with our competitors' consulting or offshore services teams, sharing that these led to significantly higher and/or unexpected services fees, a focus on building according to standardized guides instead of their unique challenges, and frustrating relationships and user experiences.

In contrast, Origami offers an unwavering dedication to our clients, providing responsive, deeply staffed, non-contractor, onshore teams. They will ensure seamless planning, design, and deployment processes for MTS—minimizing disruption while aligning closely with your evolving needs. Our approach is based on the following four principles.

Transparent Partnership—effective, ongoing collaboration and feedback among teams

Early Identification of Decision-makers—critical for approval of functionality and data conversion

Deep System Administrator Engagement—informing the configuration accurately

Incremental Adoption—going live in phases to surface critical issues; staggering deployment of less time-critical functionality

Process & Timeline

Our agile, iterative methodology prioritizes quality, speed, and adaptability. The illustration below provides an overview of major project phases, milestones, and deliverables. Deliverables per phase are shown in orange text.

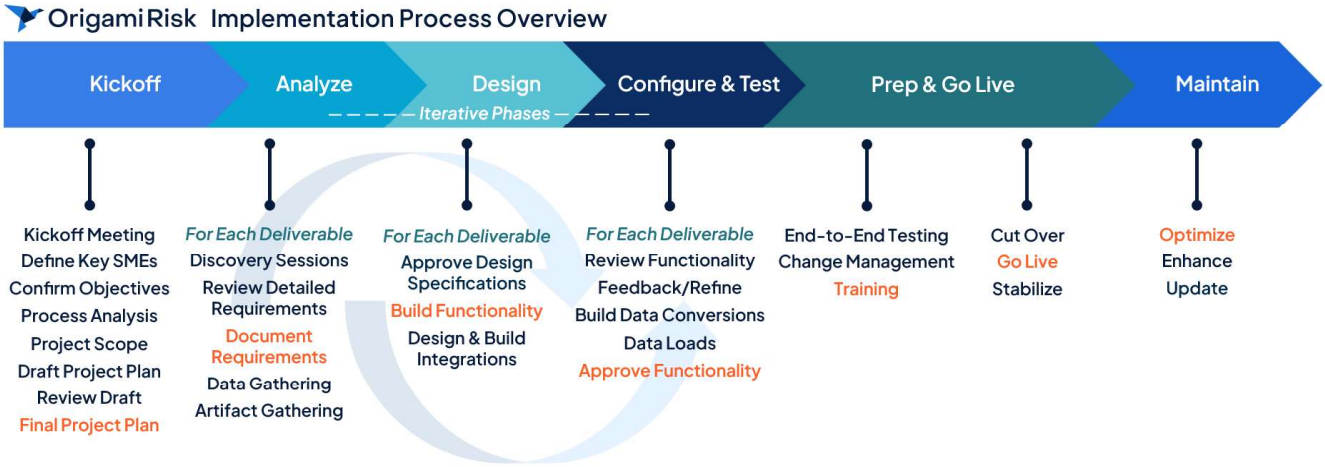

Origami manages the overall implementation process, including scheduling and leading meetings, communicating with the team, providing follow-up documentation, and maintaining the project schedule and plan through go-live and the completion of the implementation.

A fully tailored, dynamic Implementation Plan will be developed in collaboration with MTS during the Kickoff Phase, following execution of the agreement and final SOW. The plan will be managed and maintained by Origami and will be subject to review and to sign-off by MTS. We have attached a sample plan for your team's reference.

We understand that MTS would like to implement a safety management solution within the 60-day timeframe provided in the RFP SOW. Based on our team's experience, we estimate that MTS' solution can be delivered within six to nine months, with active and responsive participation of MTS for reviews, testing, and approvals.

During implementation, each detail will be scheduled with a RACI/Project Plan. Origami will configure the system for MTS, including settings, loading data, training users, and other work specified in the contract.

Post implementation, our Support Tier Model and Support Service Level Objectives (SLO) provide expectations for response and resolution time.

Implementation Team

As stated, our proposal does not include proposed personnel. We have a strong presence and track record serving government clients, ranging from transit authorities, internal government agencies, and counties, to major US cities, state governments, and the military.

Many Origami Clients have noted struggles with our competitors' consulting or offshore services teams, sharing that these led to significantly higher and/or unexpected services fees, a focus on building according to standardized guides instead of their unique challenges, and frustrating relationships and user experiences.

In contrast, we offer an unwavering dedication to our clients, providing responsive, deeply staffed, non-contractor, onshore teams. They will ensure seamless planning, design, and deployment processes for MNPS—minimizing disruption while aligning closely with your evolving needs.

Data Migration

As work begins to consolidate your systems and information, Origami will leverage its deep experience helping leading companies prioritize and consolidate data from offline or legacy systems, and scope and integrate with your needed systems.

Origami simplifies historical data migration by using advanced tools and automation to deliver fast, accurate, and cost-effective conversions. Each client decides what data is integrated and mapped into the system based on their unique needs—we will collaborate with MTS to define field, code, and data validation requirements.

Origami was built to limitlessly integrate with third-party applications without the need for custom development. Origami offers an extensive list of APIs and provides automated file import/export tools to facilitate system integrations of varied complexity and frequency. This enables real-time data flow, error-free workstreams, and confident decision-making.

Origami has a comprehensive library of integration templates within our data import center, covering fleet data, locations, policies, HR information, and more. These are built from years of experience deploying successful integrations and are designed to streamline the implementation and testing processes.

Data import center files are dynamic to allow for the import of custom fields and can be scheduled and pulled into Origami at any frequency needed by MTS. **Origami's batch processing tool** enables custom scripting of data, with full scheduling capabilities, manual process kickoffs, and encryption.

UNIVERSITY OF THE PACIFIC

"Our service rep is guiding us through the implementation phase and has been a wonderful collaborator. He is responsive and I appreciate the time and effort he has invested to learn and understand our business needs. As a result, he always has great ideas to incorporate Origami into our system functions so we achieve the best outcome."

Louisa Jones
Risk & Insurance Manager

As part of the implementation process, Origami will provide as-needed training and support to MTS for data migration/import activities and provide access to the data import center and templates for importing data into Origami.

MTS will be responsible for providing spreadsheets containing needed employee or current system data in the formats supported by the Origami data import center.

Please see the attached sample EHS Implementation Plan for additional insights into how this process is scheduled and managed.

Training Program

Origami offers client-specific training sessions as part of the implementation process, typically leveraging a train-the-trainer model. Our proposed solution includes training, covering all features and functions of your solution.

Sessions will be tailored to MTS' users and cover all relevant application and platform features. Content is based on user/group personas, RBACs, and use cases. Training materials developed **specifically for these sessions will serve as MTS' user guides once training is completed.**

Your team will also have access to the Origami Help and Learning Centers. As noted above, these are accessible directly from the application and provide how-to articles and demos of key features.

Risk & Change Management Approach

MTS can expect continuous collaboration between our teams and active engagement around all aspects of your system design, testing, and verification. We will be hands-on, assessing whether MTS' groups are overloaded with changes and mitigating risks associated with resource strain, project delays, or change fatigue.

As part of the process, Origami will define, assess, and mitigate project risks in conjunction with MTS. A risk template will be developed by Origami and shared with your team for tracking. Items are assigned probability ratings and potential impact values (low, medium, high, critical), which result in an overall risk score (low, medium, high).

On a regular basis, risks and issues will be reviewed, and appropriate action items will be defined, assigned, and executed. Typical risks and issues we manage include delays caused by third parties and/or changes in project scope.

B. Records Retention

Each client's data is retained for the life of their contract. Origami can work with clients to comply with their requirements related to retention and destruction of electronic records, or de-identification.

Detailed data processing terms are included in all Origami agreements. MTS will be considered the data owner and controller. As the data processor, Origami has strict and regulatory driven process and practices to protect our clients' data.

We use a limited number of third-party service providers to assist us in providing our services to our users. These include hosting providers or providers of additional functionality for our services (as set forth in written agreements between us and our clients). These third parties may access, process, or store personal data in the course of providing their services. Origami will only provide personal information to these third parties for the purpose of providing our services to our users. We maintain contracts with each of these third parties restricting their access, use, and disclosure of personal data.

Additional details are included in our publicly posted privacy policy. Subprocessor information is available from our Trust Center.

Please see also the attached Information Security at Origami document.

Insurance

A copy of our current Certificate of Insurance is provided within Appendix E.

Exceptions/Deviations

Our technical and contractual exceptions are included within Appendix F, as per your RFP instructions.

Cost and Price Proposal

As per your RFP instructions, Origami's Cost and Price Proposal is attached separately as "ATT 1 Cost Pricing Form."

Appendices

Appendix A - Audited Financial Statements & Financial References

As a private entity, Origami does not agree to provide detailed financial documents nor references as part of RFP processes. We confirm here that the company is financially stable, growing steadily, profitable, and has no debt. We expect these trends to continue.

Should this assurance be insufficient, upon selection of our proposed solution, and as part of the award negotiation process, Origami may consider sharing additional information or arranging for a conversation with an Origami Finance or Legal Team leader, to confirm that MTS has full confidence in our financial position and stability.

Please see also our completed Financial Questionnaire Form.

Appendix B - Staffing Plan

Origami is unable to provide a Staffing Plan at this point in time. Please see our comments about pre-committal of resources under Section C. Firm Experience and the sample team bios within the Proposed Staffing, Organization, and Management Plan Section.

The attached Sample EHS Implementation Plan includes details about how staff are organized and the responsibilities they have.

We look forward to further exploration of an MTS-Origami partnership and to the opportunity to introduce you to our team members.

Appendix C - Organizational Chart

The team structures of the resources that will be assigned to MTS' project are depicted below.

As noted in Section D. Organizational Chart, our attached Sample EHS Implementation Plan provides a detailed view into tasks per role, according to defined implementation phases. Section C. Key Personnel Proposed provides the general responsibilities per role/team member title.

Origami Implementation Team Structure

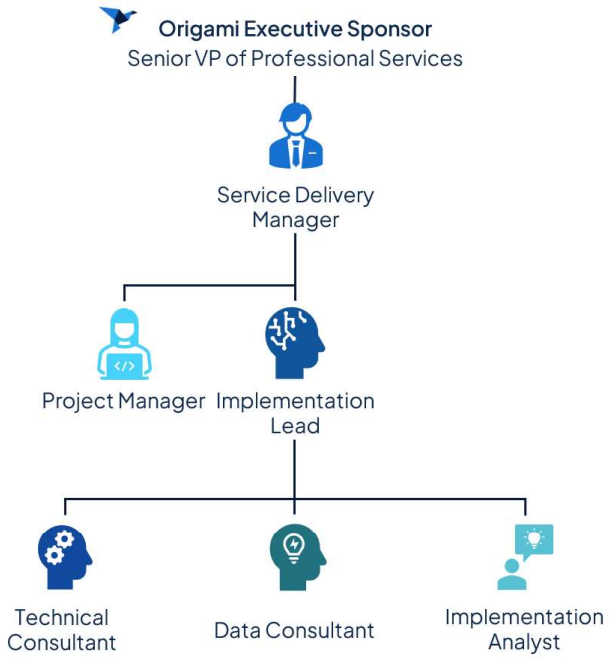

Origami Account & Relationship Support Team Structure

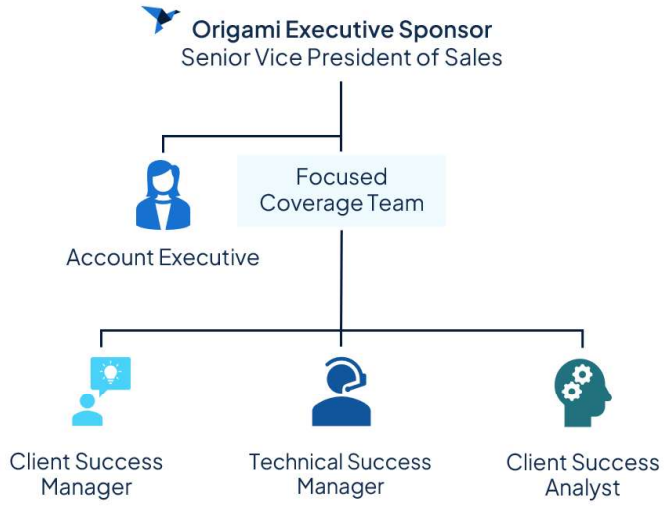

Appendix D - Recruitment of Qualified Personnel

Origami has become a destination for our industry's top talent, receiving numerous workplace awards and positive employee feedback.

We have consistently received numerous best workplace awards year-over-year, including from Inc., USA Today, Built In, and other entities. We have an exceptional employee retention rate; a significant number of our employees have been with us for more than five years, or longer.

At Origami, we leverage a structured, industry relevant and fully vetted process for the recruitment, evaluation, and hiring of our employees. Potential candidates are fully screened for relevancy to Origami's cultural norms, open roles duties and responsibilities, specific team fit, growth mindsets. Our processes are supported by comprehensive SaaS tools for tracking, feedback, and reporting.

Origami is also committed to supporting our DEI-forward culture across the entire recruitment, interviewing, hiring, and onboarding process. Formal mentorship programs, anti-bias interviewing strategies, career path programs, DEI, anti-harassment, and implicit bias ethics and compliance training are all in place. Training is required, tracked, and reported on using our company LMS.

We do not share copies of our internal policies as a matter of practice.

Appendix E – Insurance Coverage

Please see the noted exceptions regarding insurance coverages provided under Appendix F - Technical & Contractual Exceptions.

ACORD®

CERTIFICATE OF LIABILITY INSURANCE

DATE (MM/DD/YYYY): 12/17/2024

THIS CERTIFICATE IS ISSUED AS A MATTER OF INFORMATION ONLY AND CONFERS NO RIGHTS UPON THE CERTIFICATE HOLDER. THIS CERTIFICATE DOES NOT AFFIRMATIVELY OR NEGATIVELY AMEND, EXTEND OR ALTER THE COVERAGE AFFORDED BY THE POLICIES BELOW. THIS CERTIFICATE OF INSURANCE DOES NOT CONSTITUTE A CONTRACT BETWEEN THE ISSUING INSURER(S), AUTHORIZED REPRESENTATIVE OR PRODUCER, AND THE CERTIFICATE HOLDER.

IMPORTANT: If the certificate holder is an ADDITIONAL INSURED, the policy(ies) must have ADDITIONAL INSURED provisions or be endorsed. If SUBROGATION IS WAIVED, subject to the terms and conditions of the policy, certain policies may require an endorsement. A statement on this certificate does not confer rights to the certificate holder in lieu of such endorsement(s).

PRODUCER MARSH USA LLC. 155 N. WACKER, SUITE 1200 CHICAGO, IL 60661 CN108297617-Std-GAWUC-24-25	**CONTACT NAME:** Marsh | U.S. Operations **PHONE (A/C, No, Ext):** 866-966-4664 **FAX (A/C, No):** 212-948-0770 **E-MAIL ADDRESS:** Chicago.CertRequest@marsh.com
INSURED Origami Risk LLC 222 N LaSalle St. Suite 2100 Chicago, IL 60601	**INSURER(S) AFFORDING COVERAGE** — **NAIC #** **INSURER A :** Great Northern Insurance Company — 20303 **INSURER B :** Chubb National Insurance Co. — 10052 **INSURER C :** Federal Insurance Company — 20281 **INSURER D :** Travelers Property Casualty Company Of America — 25674 **INSURER E :** Greenwich Insurance Company — 22322 **INSURER F :**

COVERAGES **CERTIFICATE NUMBER:** CHI-010478296-06 **REVISION NUMBER:** 39

THIS IS TO CERTIFY THAT THE POLICIES OF INSURANCE LISTED BELOW HAVE BEEN ISSUED TO THE INSURED NAMED ABOVE FOR THE POLICY PERIOD INDICATED. NOTWITHSTANDING ANY REQUIREMENT, TERM OR CONDITION OF ANY CONTRACT OR OTHER DOCUMENT WITH RESPECT TO WHICH THIS CERTIFICATE MAY BE ISSUED OR MAY PERTAIN, THE INSURANCE AFFORDED BY THE POLICIES DESCRIBED HEREIN IS SUBJECT TO ALL THE TERMS, EXCLUSIONS AND CONDITIONS OF SUCH POLICIES. LIMITS SHOWN MAY HAVE BEEN REDUCED BY PAID CLAIMS.

INSR LTR	TYPE OF INSURANCE	ADDL INSD	SUBR WVD	POLICY NUMBER	POLICY EFF (MM/DD/YYYY)	POLICY EXP (MM/DD/YYYY)	LIMITS	
A	X COMMERCIAL GENERAL LIABILITY CLAIMS-MADE X OCCUR GEN'L AGGREGATE LIMIT APPLIES PER: X POLICY PRO-JECT LOC OTHER:			36054225	12/17/2024	12/17/2025	EACH OCCURRENCE DAMAGE TO RENTED PREMISES (Ea occurrence) MED EXP (Any one person) PERSONAL & ADV INJURY GENERAL AGGREGATE PRODUCTS - COMP/OP AGG	$ 1,000,000 $ 1,000,000 $ 15,000 $ 1,000,000 $ 2,000,000 $ 2,000,000
A	AUTOMOBILE LIABILITY ANY AUTO OWNED AUTOS ONLY X HIRED AUTOS ONLY SCHEDULED AUTOS X NON-OWNED AUTOS ONLY			73612657	12/17/2024	12/17/2025	COMBINED SINGLE LIMIT (Ea accident) BODILY INJURY (Per person) BODILY INJURY (Per accident) PROPERTY DAMAGE (Per accident)	$ 1,000,000 $ $ $
C	X UMBRELLA LIAB X OCCUR EXCESS LIAB CLAIMS-MADE DED RETENTION $			79896733	12/17/2024	12/17/2025	EACH OCCURRENCE AGGREGATE	$ 5,000,000 $ 5,000,000
B	WORKERS COMPENSATION AND EMPLOYERS' LIABILITY Y / N ANYPROPRIETOR/PARTNER/EXECUTIVE OFFICER/MEMBER EXCLUDED? N (Mandatory in NH) If yes, describe under DESCRIPTION OF OPERATIONS below	N / A		71755628 (IL,AZ,CA,CO,CT,FL, GA,IN,KS,LA,MA,ME,MI,MN,MO, NC,NH,NJ,NV,NY,OK,OR,PA,RI, SD,TN,TX,UT,VA,VT,WI,WV)	12/17/2024	12/17/2025	X PER STATUTE OTH-ER E.L. EACH ACCIDENT E.L. DISEASE - EA EMPLOYEE E.L. DISEASE - POLICY LIMIT	 $ 1,000,000 $ 1,000,000 $ 1,000,000
D	PRIMARY CYBER / E&O			ZPL-31N48247-24-I3	12/17/2024	12/17/2025	LIMIT	5,000,000
E	EXCESS CYBER / E&O			MTE9039049 05	12/17/2024	12/17/2025	LIMIT	$5M xs $5M

DESCRIPTION OF OPERATIONS / LOCATIONS / VEHICLES (ACORD 101, Additional Remarks Schedule, may be attached if more space is required)
Evidence of Insurance.

Dais Technology LLC is a named insured under the policies above.

CERTIFICATE HOLDER	CANCELLATION
Origami Risk LLC 222 N LaSalle St., Suite 2100 Chicago, IL 60601	SHOULD ANY OF THE ABOVE DESCRIBED POLICIES BE CANCELLED BEFORE THE EXPIRATION DATE THEREOF, NOTICE WILL BE DELIVERED IN ACCORDANCE WITH THE POLICY PROVISIONS. AUTHORIZED REPRESENTATIVE Marsh USA LLC

© 1988-2016 ACORD CORPORATION. All rights reserved.

ACORD 25 (2016/03) The ACORD name and logo are registered marks of ACORD

Appendix F - Technical & Contractual Exceptions

Technical Exceptions

RFP Section 3.3.1, Supportive Client References & Status of Current and Past Contracts Form

Origami has provided two of the three client references requested. We look forward to MTS' engagement around our proposed solution, and we would be happy to put your team members in touch with additional relevant clients.

RFP Section 3.3.1.B, Audited Financial Statements as Appendix A

Per the responses provided during the Q&A period, MTS confirmed bidders could provide a completed financial questionnaire form in lieu of audited statements. We have included this form in our response package.

RFP Section 3.3.2.B, Proposed Key Personnel as Appendix B

Per MTS' response during the RFP Q&A period, Origami has included sample team bios within our response package.

RFP Section 3.3.2.C, Identification of Key Personnel Proposed to each Category of Work

As noted in various sections within our response package, Origami does not pre-commit particular staff while participating in RFP events.

RFP Section 3.3.2.C, Participation by Key Personnel Proposed for Assignment

We do not disclosure this information during RFP processes. This is noted in previous sections in our response package.

RFP Section 3.3.2.D, Change of Key Personnel Only with MTS approval

Origami does not agree that MTS must have approval prior to any staffing of our projects and teams. We make every effort to deliver consistent client experiences and to avoid negatively impacting our clients with disruptive or unexpected changes. We have included further notes about how we provide such assurance throughout our response package.

RFP Section 5.2.2 Key Project Objectives, Section 8. Business Intelligence Dashboards and Reporting, Item l. "Historical GPS location information, the ability to playback or show locations of report creation"

Origami cannot feasibly meet this requirement; we look forward to understanding the requirement further and investigating workarounds.

RFP Section 5.2.4, Project Implementation, 60-Day Project Timeline

As described in our proposal, Origami expects that to implement the project as described in the RFP by MTS 60 days will not be a sufficient timeline. We have provided a sample timeline for your team's reference and will create a fully tailored project schedule if selected which will be subject to MTS' review and sign-off. As with all clients, we will prioritize delivery to MTS' desired timeline to the fullest extent possible.

RFP Section 5.2.4, Project Implementation, Schedule & Payment Milestone Breakdown

Origami's standard invoicing and payment terms (for subscription services, one-time fees, and fixed-fee implementation work) are annual, up front, in full, and Net 30. The parties will need to discuss any deviations from Origami's standard payment terms.

Origami does not agree to "acceptance" language with respect to implementation services. The solution will be considered successfully implemented once you can utilize the platform for the purposes described in the implementation scope. Since Origami utilizes an iterative implementation methodology, you will have the opportunity to test the services and identify any non-conformities with the agreed upon scope prior to Go Live.

Section 5.2.4, Project Implementation, SOW Phases & Format Requirements

Origami leverages practiced, standardized SOW documentation for all projects. We will engage with MTS in a discovery process to understand your expectations and needs. We cannot attest in advance to an external implementation methodology nor SOW deliverables, phases, formats, and timelines as provided in the RFP. We have provided a sample timeline for your team's reference and will create a fully tailored project schedule if selected which will be subject to MTS' review and sign-off. As with all clients, we will prioritize delivery to MTS' desired timeline to the fullest extent possible.

ATT 1, Cost Pricing Form

Individual line items requested under implementation plan differ from our pricing structure and are best estimates to align with the cost form provided. Total fixed costs listed will remain firm.

Contractual Exceptions

As a general response to the terms and conditions in the San Diego Metropolitan Transit System's ("MTS") Request for Proposal and the documents referenced therein or attached thereto (collectively, the "RFP"), there exist items requiring negotiation.

By way of background, Origami Risk LLC ("Origami") is a SaaS provider with nearly 1,000 clients in the risk space, including the world's largest public and private companies, governmental agencies, public entities, nonprofit public benefit corporations, and institutions of higher learning. We offer a true multi-tenant SaaS solution that allows all customers to access the service on a single platform as a single version.

Because we provide a standardized commercial service offered and operationally supported under the same terms and processes for our entire customer base, clients benefit from economies of scale for security and reliability to a degree that a single customer could not achieve on their own. This standardization, along with a reasonable allocation of risk across the entire customer base, is key to Origami's ability to offer an affordable and cost-efficient service.

Accordingly, the final documents we agree to must support how Origami conducts business and delivers our software and services—offering the rights, obligations, and protections appropriate to the services being provided and based on widely accepted industry standards.

Additionally, since all customers utilize the same infrastructure and operational support mechanisms, customized terms on an individual customer basis are not possible in certain areas where processes may be automatic or highly standardized.

For the foregoing reasons, we feel strongly the parties would benefit from utilizing Origami's Software Subscription Agreement ("SSA") and other standard agreements. Importantly, we do not generally view the RFP and our response thereto as being contractually binding and the submission of our proposal does not constitute our agreement to MTS' standard templates, or terms contained in the RFP (except where the same are legally required).

We fully expect that our legal representatives will negotiate a final contract that combines certain terms set forth in the RFP and the terms set forth in Origami's standard agreements (addressing any terms in those agreements that must be changed), all as negotiated in good faith between, and executed by, the parties.

Origami may have other changes not set forth below which are necessary to ensure that the final contract reflects the nature of the service, but some of the issues within the RFP that Origami would wish to negotiate before execution of a contract include the items in the pages that follow.

**Please note, where Origami has identified an exception for a term in one document, such exception should be interpreted as applicable for the same or similar terms in all other sections of the same document as well as any other document.*

General Solicitation

1. 2.15, Proposed Agreement
    a. As noted above, Origami anticipates the parties will negotiate in good faith, and does not agree that failure by Origami to list an exception to terms contained in MTS' solicitation indicates Origami's acceptance of such terms.
2. 5.2.4, Project Implementation
    a. Origami's standard invoicing and payment terms (for subscription services, one-time fees, and fixed-fee implementation work) are annual, up front, in full, and Net 30. The parties will need to discuss any deviations from Origami's standard terms.
3. 5.2.14, Acceptance
    a. Origami does not agree to "acceptance" language with respect to implementation services. The solution will be considered successfully implemented once you can utilize the platform for the purposes described in the implementation scope. Since Origami utilizes an iterative implementation methodology, you will have the opportunity to test the services and identify any non-conformities with the agreed upon scope prior to Go Live.
4. 5.7, Contractor's Information Security Responsibilities
    a. Origami will comply with our internal security policies and procedures. SaaS providers like Origami rely on standardization of security policies and procedures across all clients (which allows SaaS suppliers to provide a security framework no single client could

achieve on its own for the same cost) and thus we are generally unable to agree to client policies and procedures.

Sample Standard Agreement, Standard Conditions

5. Cover Page
    a. Origami's standard initial term is three years, with three-year renewals negotiated prior to the start of the renewal period. The parties will need to discuss any deviations from Origami's standard approach to contract term lengths and renewals.
6. 7.8.1, Termination for Convenience
    a. Origami does not agree to a right for our clients to terminate for convenience. Pricing is based on fixed products over a fixed term and we recoup our investment over the duration. Also, we provide implementation at a fixed price, generally at a loss in the first year, with recoupment of that loss occurring in the remaining years on the order. Lastly, our business and pricing models contemplate and require a certain level of stability in client subscription agreements (standard for SaaS companies) - without stability we would not be able to offer competitive prices.
7. 7.8.2, Termination for Default
    a. We can generally agree to mutual termination rights based on a parties breach of a material term of the agreement (with a 30-day cure period), as well as related to an insolvency event. The parties will need to discuss any additional termination rights, which must be reasonable and in keeping with industry standards for SaaS.
8. 7.9, Assignability
    a. Origami needs operational flexibility and thus needs the ability to assign our agreements pursuant to M&A activity without prior written permission. This also ensures you will have continuity of service.
9. 7.10, Standard of Performance
    a. Origami will warrant that the platform will perform in all material respects in accordance with the documentation when used in accordance with the terms of the underlying agreement. Origami will further warrant that the professional services will be performed in a professional and commercially reasonable manner consistent with the standard of care exercised by similarly situated companies in Origami's industry. The parties will need to negotiate in good faith any additional warranties.
10. 7.11, Time
    a. We can agree to include a time is of the essence clause in any statement of work.
11. 7.13, Suspension of Work
    a. We generally do not agree to a contractual right to suspend work. You can always instruct Origami to pause processing data, and you can choose not to use the platform. However, in the event of unscheduled pauses to implementation work, Origami reserves the right to reassign resources, the parties may have to enter into an amended SOW to address any additional costs associated with the unscheduled pause, and the term of any licenses shall continue uninterrupted.
12. 7.14, Inspection and Testing
    a. Origami does not agree to broad audit or access rights. Origami will agree to provide copies of our business records necessary for MTS to confirm the accuracy of Origami's invoices and performance of Origami's obligations under the agreement.

13. 7.18, Indemnity
    a. Our general company policy is to limit our indemnification obligations to IP infringement claims only. Any additional indemnification obligations will need to be negotiated in good faith between the parties, be consistent with industry norms, and be subject to reasonable disclaimer of consequential damages and limitations on liability.
14. 7.23, Insurance
    a. Origami does not own vehicles and thus does not carry an owned auto policy
    b. Origami will agree to a waiver of subrogation and additional insured terms for its CGL policy only.
    c. The policy limits must conform to Origami's existing policies (e.g., CGL – 1M/2MM). We have included a generic COI in our response package for MTS' review.
    d. Origami will provide notice upon any cancellation or modification of a policy that would result in Origami being unable to meet its insurance obligations under the Agreement.
    e. Origami does not agree to a contractual right of withholding.

15. Warranties – Guarantees
    a. Please see response to 7.10 above.
16. 7.32-7.34, Data Rights
    a. Origami will own full rights to all work product, customizations, and services that we provide to you. You will have full ownership rights over the data that you upload into our systems. The foregoing is industry standard allocation of IP rights when purchasing a SaaS solution. Please note that Origami will not be creating any IP for you (e.g., work made for hire). At the conclusion of the relationship, your only IP in Origami's possession will be your data that was uploaded to our platform (which we will export to you upon request).
17. 7.38, Americans with Disabilities Act
    a. Origami will agree to use good faith and commercially reasonable efforts to meet and maintain compliance with WGAG 2.1 Level AA guidelines.
18. 7.39, Substance Abuse
    a. The parties will need to discuss the applicability of this section.

ATT 4 44-C Travel Guidelines for Contractors

Origami will consider MTS' provided travel guidelines, rates, and processes if on-site services are to be provided. While we cannot agree to the provided guidelines at this stage, Origami will agree to use good faith and commercially reasonable efforts to meet MTS' standards.

Additional Appendices

As referenced throughout this proposal, Origami has attached the following documents in support of our suggested solution and/or to provide additional information to MTS in context of the RFP details.

- Sample EHS Implementation Plan
- Information Security at Origami
- Software Subscription Agreement
- Standard Service Level Objectives

Certification Regarding Debarment

RETURN THIS FORM WITH YOUR PROPOSAL

CERTIFICATION REGARDING DEBARMENT, SUSPENSION AND OTHER INELIGIBLE AND VOLUNTARY EXCLUSIONS LOWER THAN TIER COVERED TRANSACTIONS

CONTRACTOR AND SUBCONTRACTOR'S STATEMENT OF ELIGIBILITY

(Provide one completed Form for the Prime Contractor and any Subcontractors)

The prime/subcontractor certifies or affirms the truthfulness and accuracy of the contents of the statements submitted on or with this certification.

QUESTIONNAIRE

Has the Contractor, or any officer, principal, affiliates or employee of the Contractor ever been debarred, suspended, proposed for debarment, declared ineligible or otherwise prevented from bidding on, or completing a federal, state, or local government project?

☐ Yes

☒ No

If the answer is yes, or where the prime/subcontractor is unable to certify any of the statements in the above certifications, such prime/subcontractor shall attach an explanation (i.e. date, background, resolution) with this form.

Note: Failure to provide this form at the time of Bid/Proposal will not result in a finding of a non-responsive bid/proposal. Submittal of this form for The Prime Contractor and all Subcontractors is required for a Proposer to be deemed "Responsible." MTS encourages Proposers to complete and submit all forms at the time of bid/proposal.

SUBCONTRACTOR (Copy this form if needed for additional subcontractors)		PRIME CONTRACTOR	
Business Name:		Business Name:	Origami Risk LLC
License No. (if applicable):		License No. (if applicable):	
DUNS No.:		DUNS No.:	929808512

ACKNOWLEDGED AND AGREED

Print Name:		Print Name:	Earnest Bentley
Title:		Title:	President, Growth Enterprise
Signature:		Signature:	
Date:		Date:	December 1, 2025

State Restrictions on Campaign Contributions

CAMPAIGN CONTRIBUTION DISCLOSURE FORM

COPY THIS FORM IF NEEDED FOR ADDITIONAL ENTIRES.

The current MTS Board members are listed HERE.

Firm Name: Origami Risk

Address: 222 N LaSalle St Ste 2100
Street

Chicago IL, 60601
City State Zip

Phone: (312) 546-6515

Title of pending license, permit, or other entitlement for use (including a contract or amendment) that pertains to the Party in the manner described in Government Code Section 84308(a):

RAIL SAFETY CLOUD INCIDENT MANAGEMENT SYSTEM (RS-CIMS)

L1692.0-25

Date of MTS Board meeting when the license, permit, or other entitlement for use (including contract or amendment) is scheduled for MTS Board consideration (for RFPs this will be an estimated date at the time the solicitation is published):

date

Name(s) of MTS member(s) or officer(s) to whom the Proposer, a participant, or either's agent made campaign contributions aggregating more than $250 within the time period specified in Government Code Section 84308(b) or (c):

Disclosure Information	
Name of Board Member or Officer:	Not applicable
Name of Contributor:	
Date(s):	
Amount:	

Disclosure Information	
Name of Board Member or Officer:	Not applicable
Name of Contributor:	

90

MTS Doc No: L1692.0-25
RAIL SAFETY CLOUD INCIDENT MANAGEMENT SYSTEM (RS-CIMS)

Date(s): _____

Amount: _____

By signing below, I acknowledge that no contribution(s) aggregating more than $250 were made by the Consultant or its agents to an MTS Board Member or Officer within the time period specified in Government Code Section 84308(b) or (c).

ACKNOWLEDGED AND AGREED

Signature of Party and/or Party's Agent: 

Date: December 1, 2025

Compliance with EEO Program

As per Section 3.8 of the RFP, Origami confirms that if we are selected by MTS to deliver your Safety Cloud Incident Management Solution we will complete and sign a Workforce Report (Equal Opportunity Workforce Report Form) as included in the RFP.

Brand Names

Origami acknowledges that MTS has clarified that whenever reference to a specific "Brand Name" is made in the specifications, it is to be considered solely illustrative, and is used merely to describe a component which has been selected by MTS as best meeting the specific minimal operational, design, performance, capacity, maintenance, quality, and reliability criteria of the desired end product.

Wherever a "Brand Name" appears, the term "or approved equal" shall be automatically inferred by Origami.

Completed RFP Forms

Contact Information

RETURN THIS FORM WITH YOUR PROPOSAL

CONTACT INFORMATION

Read attached General Provisions carefully. They are a part of your proposal. Unit prices will prevail regardless of extensions submitted by the Proposer.

Company Information:

The Official, Legal Name of Proposing Firm:	Origami Risk LLC
Doing Business As:	N/A
Legal Structure (Corp./Partner/Proprietor):	Limited Liability Company
Company Mailing Address:	222 N LaSalle St, Ste 2100
	Street
	Chicago IL 60601
	City State Zip

Person Authorized to sign:

Point of Contact:	Earne Bentley
Title:	President, Enterprise Growth
E-Mail Address:	legal@origamirisk.com
Phone Number:	(312) 546-6515

Accounts Receivable

Point of Contact:	Cody Volpe
Title:	Senior Analyst, Accounts Receivable
E-Mail Address:	finance@origamirisk.com
Phone Number:	(312) 546-6515

Designation of Subcontractors

RETURN THIS FORM WITH YOUR PROPOSAL

DESIGNATION OF SUBCONTRACTORS

List Subcontractor participants below. If 100% of item is not to be performed or furnished by subcontractor, describe exact portion of item to be performed or furnished by subcontractor. The successful bidder must execute and return this form even if no subcontractor participation will be reported.

Origami Risk is the prime and will not be using subcontractors.

	Subcontractor 1
Company Name:	
Contractor License or Certificate Number	
DBE, PDBE, DVBE, LGBTBE, MBE, SB, WBE:	
% of Work:	
Department of Industrial Relations (DIR) Number:	
Point of Contact	
Email:	
Phone Number:	
Address:	
	Street
	City State Zip

Description of Work:

MTS DBE Program – Information for Bidder List and Commercial Useful Function

RETURN THIS FORM WITH YOUR PROPOSAL

MTS DBE PROGRAM - INFORMATION FOR BIDDER LIST AND COMMERCIAL USEFUL FUNCTION

MTS is required by Disadvantaged Business Enterprise (DBE) Regulations at 49 CFR Part 26 to collect and report data about DBE and non-DBE contractors and subcontractors who seek to work on MTS's projects. MTS may also use this data to set MTS's overall DBE goals and to assist in monitoring commercial useful function in order to count DBE participation toward meeting MTS's overall DBE goals.

INSTRUCTIONS: Each prime contractor and each subcontractor bidding/submitting a proposal is **required** to complete this form as part of their bid or proposal. If multiple subcontractors, copy this form.

1. Firm Name:	Origami Risk, LLC
2. Firm's Full Address (street, city, state, and zip code):	222 N LaSalle St Ste 2100 Chicago, IL 60601
3. NAICS code for work seeking to perform:	**513210**
4. If applicable, please check any certification that your firm currently maintains:	❑ DBE ❑ SB – Small Business ❑ DVBE – Disabled Veteran Owned Business ❑ LGBTBE – LGBT Owned Business ❑ MBE – Minority Owned Business ❑ PDBE – Persons with Disability Owned Business ❑ WBE – Woman Owned Business
5. Only if DBE certified firm, please check one (1) type of work your firm is seeking to perform on this bid/proposal (as defined at enclosed MTS DBE Program: Commercial Useful Function – Guidance for DBE Contractors):	❑ Construction/Maintenance Services ❑ Professional Services ❑ Other Services – e.g. broker ❑ Manufacturer of Materials/Supplies ❑ Regular Dealer of Materials/Supplies ❑ Distributer of Materials/Supplies ❑ Other (not listed above) Material Supplier ❑ Trucking
6. Race of majority owner of firm:	**White**
7. Gender of majority owner of firm:	**Male**
8. Year firm was established:	**2009**
9. Please check your firm's applicable annual gross receipt range:	❑ Less than $1,000,000 ❑ $1,000,0001 - $15,000,000 ❑ $15,000,001 - $30,720,000 ❑ $30,720,001 - $50,000,000 ☑ Greater than $50,000,000

SIGNATURE ACKNOWLEDGES AND AFFIRMS ACCURACY OF COMPLETED FORM

SUBCONTRACTOR	PRIME CONTRACTOR
Signature: _____	Signature: _____
Date: _____	Date: December 1, 2025

73

MTS Doc No: L1692.0-25
RAIL SAFETY CLOUD INCIDENT MANAGEMENT SYSTEM (RS-CIMS)
V.24

California Public Records Act Acknowledgement Form

CALIFORNIA PUBLIC RECORD ACT (PRA) ACKNOWLEDGEMENT

I/We hereby represent, acknowledge, and agree as follows:

1. MTS is a California public agency established by California Public Utilities Code, Section 120000. et. seq., and is subject to the California PRA (Government Code sec. 6250 et seq.) which provides generally that all records relating to a public agency's business are open to public inspection unless exempted from disclosure by law.

2. The bid I/we have submitted to MTS is open to public inspection under PRA unless it is exempted from disclosure by law.

3. To the extent the bid includes materials that I/we believe are exempt from disclosure under PRA, **I/we understand that I/we must provide a letter identifying the materials that I/we believe are exempt from disclosure and explaining the basis for exemption.**

4. Any materials not identified as exempt from disclosure are open to public inspection, and I/we waive any right to subsequently claim exemption from disclosure for such materials.

5. MTS at all times retains the right to make the final determination regarding what, if any, portion of a bid is subject to disclosure under PRA.

6. Use of headers/footers bearing designations such as "confidential", "proprietary", or "trade secret" on all or nearly all of a bid which would prohibit or limit public inspection is not acceptable and may deem the bid non-responsive and may be rejected; labeling a page as such does not prohibit MTS from disclosing the page in response to a PRA response or in the ordinary cause of business if MTS concludes it is obligated to so by applicable law.

7. To defend and indemnify MTS in any action on a PRA request for any of the contents of a Bid marked Trade Secret, Confidential or Proprietary.

8. Marking a document as "trade secret", "confidential" or "proprietary" without the express written permission of MTS does not exempt a document from disclosure to third parties under state or federal law, or in the normal course of MTS's business operations. MTS has no obligation to get a respondent's permission before producing such documents.

9. The bid I/we have submitted *(check one of the following)* materials that we believe are exempt from disclosure under PRA.

INCLUDES ☐

DOES NOT INCLUDE ☑

ACKNOWLEDGED AND AGREED

Company Name:	Origami Risk LLC
Title:	President, Enterprise Growth
Signature:	
Date:	December 1, 2025

Noncollusion Declaration Form

NONCOLLUSION DECLARATION

TO BE EXECUTED BY PROPOSER AND SUBMITTED WITH OFFER

(23 U.S.C. § 112(c) and California Public Contract Code § 7106)

The undersigned declares:

I am the President, Enterprise Growth of Origami Risk, LLC, the party making the foregoing offer.

The offer is not made in the interest of, or on behalf of, any undisclosed person, partnership, company, association, organization, or corporation. The offer is genuine and not collusive or sham. The proposer has not directly or indirectly induced or solicited any other proposer to put in a false or sham offer. The proposer has not directly or indirectly colluded, conspired, connived, or agreed with any proposer or anyone else to put in a sham offer, or to refrain from submitting an offer. The proposer has not in any manner, directly or indirectly, sought by agreement, communication, or conference with anyone to fix the offer price of the proposer or any other proposer, or to fix any overhead, profit, or cost element of the offer price, or of that of any other proposer. All statements contained in the offer are true. The proposer has not, directly or indirectly, submitted his or her offer price or any breakdown thereof, or the contents thereof, or divulged information or data relative thereto, to any corporation, partnership, company, association, organization, offer depository, or to any member or agent thereof, to effectuate a collusive or sham offer, and has not paid, and will not pay, any person or entity for such purpose.

Any person executing this declaration on behalf of the proposer that is a corporation, partnership, joint venture, limited liability company, limited liability partnership, or any other entity, hereby represents that he or she has full power to execute, and does execute, this declaration on behalf of the proposer.

I declare under penalty of perjury under the laws of the State of California that the foregoing is true and correct and that this declaration is executed on Dec 1, 2025 (date), at Chicago (city), IL (state).

ACKNOWLEDGED AND AGREED

Name of Contractor: Origami Risk LLC

Signature: 

Date: December 1, 2025

Iran Contracting Act Certification Form

IRAN CONTRACTING ACT CERTIFICATION

(Public Contract Code Section 2200 *et seq.*)

As required by California Public Contract Code Section 2204, the Contractor certifies subject to penalty for perjury that the option checked below relating to the Contractor's status in regard to the Iran Contracting Act of 2010 (Public Contract Code Section 2200 *et seq.*) is true and correct:

1. The Contractor is not:

   a. identified on the current list of persons and entities engaging in investment activities in Iran prepared by the California Department of General Services in accordance with subdivision (b) of Public Contract Code Section 2203; or

   b. a financial institution that extends, for 45 days or more, credit in the amount of $20,000,000 or more to any other person or entity identified on the current list of persons and entities engaging in investment activities in Iran prepared by the California Department of General Services in accordance with subdivision (b) of Public Contract Code Section 2203, if that person or entity uses or will use the credit to provide goods or services in the energy sector in Iran. ☒

2. MTS has exempted the Contractor from the requirements of the Iran Contracting Act of 2010 after making a public finding that, absent the exemption, MTS will be unable to obtain the goods and/or services to be provided pursuant to the Contract. ☐

3. The amount of the Contract payable to the Contractor for the Project does not exceed $1,000,000. ☐

Note: In accordance with Public Contract Code Section 2205, false certification of this form shall be reported to the California Attorney General and may result in civil penalties equal to the greater of $250,000 or twice the Contract amount, termination of the Contract and/or ineligibility to bid on contracts for three years.

ACKNOWLEDGED AND AGREED

Company Name: Origami Risk, LLC

Title: President, Enterprise Growth

Signature: 

Date: December 1, 2025

Vendor Security Questionnaire

VENDOR SECURITY QUESTIONNAIRE

Metropolitan Transit System

INSTRUCTIONS: Vendors will need to answer as many questions as possible for MTS Information Security and Intelligence group to review.

Question	Proposer Explanation/Notes
Governance and Organizational Structure	
1. Who is responsible for cybersecurity within the organization?	The internal Information Security team.
2. Is there a chief information security officer (CISO)?	Yes.
3. Is there a cross-organizational committee that meets regularly on cybersecurity issues?	Yes.
4. Have you participated in a cybersecurity exercise with your senior executives?	Yes.
5 How do you prioritize your organization's most critical assets?	Origami has robust Information Security Program, Policy, and Procedures, and is subject to annual, third-party SOC 1 Type II and SOC 2 Type II audits. Origami aligns with the NIST framework. We have attached an overview of our program, which includes asset management, for MTS' reference.
6. How do you specifically protect customer information?	Origami protects the security of our clients' data while at rest and in transit. Data at rest is subject to persistent encryption whenever possible. In our Cloud environments, data at rest is secured using the native and robust encryption services provided by AWS. For highly sensitive data, we may employ additional symmetric or asymmetric encryption on top of the native protocols. For databases, we utilize the persistent encryption options offered by the Database Management System (DBMS) vendor. Data in transit is encrypted throughout its lifecycle using protocols to protect it as it moves through applications using Transport Layer Security (TLS) and Secure Shell (SSH) protocols.
7. Have you ever experienced a significant cybersecurity incident? Please define and describe it	No.
8. What types of cybersecurity policies do you have in place in your organization today?	Policies cover the following topics. • Our Information Security Team • Data Protection Program • Third-Party Risk Management

	• Compliance and Enforcement • Employee Screening and Training • Governance and Oversight • Risk Assessment and Management • Business Continuity and Disaster Recovery • Asset Management • Protection and Threat Management • Application Security • Hosting Security • AI Security • Endpoint Security • Event/Incident Monitoring and Response • Security Standards, Audits, and Reporting Please reference the attached document, Information Security at Origami.
9. Do you outsource any IT or IT security functions to third- party service providers? If so, who are they, what do they do, and what type of access do they have?	Yes. Origami is hosted with AWS data center. Third parties do not have access to personal data in Origami Risk software.
10. How frequently are your employees trained on your IT security policies, and do you use automated assessments?	Origami conducts security awareness training for all employees upon hire and refresher trainings are completed annually. We subscribe to an industry known service provider that has a multitude of trainings available and we can customize the topics to suit our needs. Training is tracked via our learning management system and monitored by our Learning Team as well as Compliance Team.
Security Controls and Technology	
1. How do you inventory authorized and unauthorized devices and software?	Origami maintains an inventory of its information systems that are managed by mobile device management systems (MDM).
2. Have you developed secure configurations for hardware and software?	Origami follows industry standards for configuration management. Origami keeps images in secure storage, backed up within Amazon's environment.
3. How do you assess the security of the software that you develop and acquire?	Origami has a formal SDLC process in place, created by our Development and Information Security teams. As features enter the 'idea' stage, the Information Security team is notified and works with developers to ensure that vulnerabilities are not introduced via new features, while simultaneously working to increase the security of the platform that is already deployed. Furthermore, all changes are evaluated by our security team for security impact analysis.
4. What processes do you use to monitor the security of your wireless networks?	Origami is deployed as a cloud-based, SaaS solution. Access requires only a modern browser with internet connectivity from any desktop or laptop

	computer (mac, PC) or mobile device (iOS, Android). There are no operating system requirements. Please review question 6 for more.
5. Do you have data recovery capabilities?	Yes. Origami has Disaster Recovery (DR) and Business Continuity (BC) Plans in place. They have clear owners and are reviewed and updated at least annually or in the event of a major change. The plans and processes are assessed as part of our annual SOC2 Type 2 Audit, but are considered private and are not shared externally. Please reference the attached document, Information Security at Origami.
6. Do you have automated tools that continuously monitor to ensure malicious software is not deployed?	Yes. Origami employs industry standard automated tools for network level analysis and for host-based analysis. The data is fed into our Security Information & Event Monitoring (SIEM) and monitored 24/7 by our Managed Security Service Provider (MSSP).
7. Describe the processes and tools you use to reduce and control administrative privileges.	We provide access according to least privilege and use role-based access controls.
8. What processes do you have in place to prevent the exfiltration of sensitive data, particularly sensitive customer data like ours?	Origami protects the security of our clients' data while at rest and in transit. Please review question 6 from the Governance and Organizational Structure section.
9. How do you plan and prepare for a cybersecurity incident? What processes do you have in place to respond to an incident? Do you regularly practice those things?	Origami employs a documented incident response and recovery program. In the event of a suspected or confirmed incident, the Information Security Team coordinates response activities with representatives from each IT discipline, as well as physical security, legal, and corporate communications. As part of a documented incident management lifecycle, our team uses a comprehensive suite of tools and best practices to manage incidents through detection, analysis, containment, eradication, and recovery. We work with our dedicated security as a service partner to detect, investigate, and respond to threats, safeguarding the confidentiality, integrity, and availability of our information and technology environment. Origami has formal procedures for identifying and responding to security incidents, collaborating with other departments to contain, mitigate, and remediate issues, and notifying clients, regulators, or other parties as needed. Our Threat Management Center operates continuously with ongoing monitoring and response.

	Please reference slide 36 of Information Security at Origami.
10. Do you conduct regular external and internal tests to identify vulnerabilities and attack vectors, including penetration testing, red team exercises, or vulnerability scanning	Yes. Origami uses independent third-parties to perform annual penetration tests. Application security is validated by running scanning tools and conducting manual penetration testing to identify and remediate application code vulnerabilities before applications are moved to production. The application environment is monitored with regular scans to identify needed operating system, middleware and application patches.
11. From whom do you receive cyberthreat and cyber vulnerability information and how do you use that information?	Origami scans for vulnerabilities in the information system and client applications regularly and when new vulnerabilities potentially affecting the system/applications are identified and reported. Origami analyzes vulnerability scan reports and results from security control assessments. In addition, Origami uses independent third-parties to perform annual penetration tests.
12. How do you manage remote access to your corporate network?	Origami has a highly remote work force. Authentication controls are in place.
13. Do you have a removable media policy and controls to implement the policy?	Yes.
14. How do you monitor for unauthorized personnel, connections, devices, and software?	Origami employs industry standard automated tools for network level analysis and for host-based analysis. In addition, employee access is restricted according to least privilege.
15. Describe the process you have in place to communicate to us about security incidents affecting our data.	MTS will be notified of any breaches in accordance with Origami's internal guidelines which are aligned with our contractual obligations.

ACKNOWLEDGED AND AGREED

Company Name: Origami Risk

Contact Name: Lisa Plumley

Job Title: Director of Governance, Risk, & Compliance

Email: lplumley@origamirisk.com

Phone Number: +1 (312) 546-6515

Support Service Level Objectives

ORIGAMI RISK

Incident

An unplanned interruption or degradation in the quality of the combined Service and Configurations.

Priority Matrix

The following table outlines the Service Level Objectives for any incident that gets reported via Origami Service Case Management. It is important to note that these response times represent our initial acknowledgment and engagement with the customer. While we strive to meet these SLOs consistently, the ultimate goal remains to resolve incidents as quickly as possible.

Priority	Description	Acknowledgment	Updates	Resolution
P0	The Origami production system is fully down and unavailable	1 Hour (24 x 7 on-call availability)	Hourly	Emergency Patch deployed as needed, as quickly as validation of solution
P1	Some Origami essential functionality is substantially degraded or unusable - there is no workaround	2 Hours*	Daily	Emergency Patch deployed as needed, as quickly as validation of solution
P2	Some Origami functionality is impaired, but there is a reasonable workaround or impact is minor	1 Business Day	Weekly	Included in the next available quarterly production release
P3	Non-essential Origami functionality is impaired, but there is a reasonable workaround, is cosmetic or a minor inconvenience	1 Business Day	Not applicable	Routed to Product Team to be included in prioritization decisions for enhancements

***Support Availability:** 7:00 a.m. - 7:00 p.m. CT on business days

Standard Maintenance Window: 8:00 p.m. – 7:00 a.m. CT

System Availability 10-year History: 99.9%

Backup & Recovery:

- Every 15 minutes via incremental backups
- Differential database backup nightly
- Full backup weekly
- Backups stored off site and encrypted at rest via Amazon S3

Status Page: origamirisk.statuspage.io

Origami Risk—Sample EHS Implementation Plan

Origami Risk

WBS	At Risk	Task Health	Status	% Complete	Task Name	Deliverable	Start Date	End Date	Duration	Predecessors	Variance	Assigned To	Next Assigned	Role(s)	Risks	Assumptions	Baseline Start	Baseline Finish
1		Blue	Not Started	0%	Implementation GO LIVE	TRUE	01/01/26	09/10/26	180d		62d						01/01/26	12/07/26
1.1		Blue	Not Started	0%	Project Launch NTW, Expanded New Market		01/01/26	01/27/26	18d		0						01/01/26	01/27/26
1.1.1		Blue	Not Started	0%	Setup Tasks		01/01/26	01/12/26	7d		0						01/01/26	01/12/26
1.1.1.1		Blue	Not Started	0%	Implementation Project Team Assigned		01/01/26	01/01/26	1d	0	0	SDM	Origami	PM			01/01/26	01/01/26
1.1.1.2		Blue	Not Started	0%	Contact Client Project Sponsor, Introduce PM		01/05/26	01/05/26	1d	4	0	SDM	Origami	SDM			01/05/26	01/05/26
1.1.1.3		Blue	Not Started	0%	Update Project Team & Create Initial IHC in SFDC		01/06/26	01/06/26	1d	5	0	SDM	Origami	SDM			01/06/26	01/06/26
1.1.1.4		Blue	Not Started	0%	Send Data Packet to Client		01/05/26	01/05/26	1d	4	0	BSA	Origami	IL			01/05/26	01/05/26
1.1.1.5		Blue	Not Started	0%	Prepare External Kickoff Slide Deck		01/05/26	01/05/26	1d	4	0	BSA	Origami	IL			01/05/26	01/05/26
1.1.1.6		Blue	Not Started	0%	Create Database in LIVE		01/05/26	01/09/26	5d	4	0	NPP BSA	Origami	NPP BSA			01/05/26	01/09/26
1.1.1.7		Blue	Not Started	0%	Add Key Origami Resources as Users		01/12/26	01/12/26	1d	9	0	NPP BSA	Origami	NPP BSA			01/12/26	01/12/26
1.1.1.8		Blue	Not Started	0%	Configure Service Logs in Origami		01/12/26	01/12/26	1d	9	0	NPP BSA	Origami	NPP BSA			01/12/26	01/12/26
1.1.1.9		Blue	Not Started	0%	Setup New Client folders in SharePoint		01/05/26	01/05/26	1d	4	0	NPP BSA	Origami	NPP BSA			01/05/26	01/05/26
1.1.2		Blue	Not Started	0%	Kickoff & Internal Schedule Review		01/05/26	01/22/26	14d		0						01/05/26	01/22/26
1.1.2.1		Blue	Not Started	0%	Schedule Internal & External Kickoff		01/05/26	01/05/26	1d	4	0	PM	Origami	PM			01/05/26	01/05/26
1.1.2.2		Blue	Not Started	0%	Schedule Internal & External Schedule Reviews		01/05/26	01/05/26	1d	4	0	IL,PM	Origami	IL,PM			01/05/26	01/05/26
1.1.2.3		Blue	Not Started	0%	Prepare Deliverable Review		01/05/26	01/05/26	1d	4	0	PM	Origami	PM			01/05/26	01/05/26
1.1.2.4		Blue	Not Started	0%	Prepare Project Schedule		01/05/26	01/05/26	1d	4	0	PM	Origami	PM			01/05/26	01/05/26
1.1.2.5		Blue	Not Started	0%	Confirm Sheet Summary Information		01/05/26	01/05/26	1d	4	0	PM	Origami	PM			01/05/26	01/05/26
1.1.2.6		Blue	Not Started	0%	Conduct Internal Kick Off and Confirm Project Deliverables		01/06/26	01/09/26	4d	14	0	PM	Origami	PM			01/06/26	01/09/26
1.1.2.7		Blue	Not Started	0%	Conduct Internal Project Schedule Review		01/12/26	01/14/26	3d	15,19	0	PM	Origami	PM			01/12/26	01/14/26
1.1.2.8		Blue	Not Started	0%	Review Deliverables for Solution Template Availability		01/15/26	01/15/26	1d	20	0	IL	Origami	IL			01/15/26	01/15/26
1.1.2.9		Blue	Not Started	0%	Conduct External Kick Off and Confirm Project Deliverables (Include FCT)		01/15/26	01/21/26	5d	14, 19, 20	0	IL	Origami	IL			01/15/26	01/21/26
1.1.2.10		Blue	Not Started	0%	Send Client Kickoff Follow Up Email		01/22/26	01/22/26	1d	22	0	PM	Origami	PM			01/22/26	01/22/26
1.1.3		Blue	Not Started	0%	External Preliminary Schedule Preview & Required Meetings		01/22/26	01/27/26	4d		0						01/22/26	01/27/26
1.1.3.1		Blue	Not Started	0%	Schedule Internal Status Calls		01/22/26	01/22/26	1d	22	0	IL,PM	Origami	IL,PM			01/22/26	01/22/26
1.1.3.2		Blue	Not Started	0%	Schedule External Preliminary Schedule Review		01/22/26	01/22/26	1d	22	0	PM	Origami	PM			01/22/26	01/22/26
1.1.3.3		Blue	Not Started	0%	Schedule Business Process Analysis Sessions (2)		01/22/26	01/22/26	1d	22	0	PM	Origami	PM			01/22/26	01/22/26
1.1.3.4		Blue	Not Started	0%	Schedule Final External Schedule Review		01/22/26	01/22/26	1d	22	0	PM	Origami	PM			01/22/26	01/22/26
1.1.3.5		Blue	Not Started	0%	Schedule Discovery Sessions		01/22/26	01/22/26	1d	22	0	PM	Origami	PM			01/22/26	01/22/26
1.1.3.6		Blue	Not Started	0%	Schedule SDM/Project Sponsor Every 2 Month Check-in		01/22/26	01/22/26	1d	22	0	SDM	Origami	SDM			01/22/26	01/22/26
1.1.3.7		Blue	Not Started	0%	Schedule Monthly SDM Governance / IHC Call		01/22/26	01/22/26	1d	22	0	PM	Origami	PM			01/22/26	01/22/26
1.1.3.8		Blue	Not Started	0%	Schedule Client Status Calls		01/22/26	01/22/26	1d	22	0	PM	Origami	PM			01/22/26	01/22/26
1.1.3.9		Blue	Not Started	0%	Conduct Client Preliminary Schedule Preview call		01/23/26	01/27/26	3d	20, 22, 26	0	PM	Origami	PM			01/23/26	01/27/26
1.2		Blue	Not Started	0%	Configure EHS		01/22/26	09/10/26	166d		35d						01/22/26	10/29/26
1.2.1		Blue	Not Started	0%	Conduct Business Process Analysis (BPA)		01/29/26	02/09/26	8d		0						01/29/26	02/09/26
1.2.1.1		Blue	Not Started	0%	Conduct Business Process Analysis (BPA) 1 of 2		01/29/26	01/29/26	1d	22FS+5d	0	SA	Origami	SA			01/29/26	01/29/26
1.2.1.2		Blue	Not Started	0%	Complete Post BPA Follow-Up: Amendments, Documentation, Action Items		01/30/26	02/03/26	3d	36	0	SA	Origami	SA			01/30/26	02/03/26
1.2.1.3		Blue	Not Started	0%	Conduct Business Process Analysis (BPA) 2 of 2 (As Needed)		02/04/26	02/04/26	1d	37	0	SA	Origami	SA			02/04/26	02/04/26
1.2.1.4		Blue	Not Started	0%	Review and Confirm BPA Alignment w/ Client (Attach BPA to Row)		02/04/26	02/04/26	1d	38SS	0	PM	Client	PM			02/04/26	02/04/26
1.2.1.5		Blue	Not Started	0%	Validate Schedule Dates & Adjust Durations as needed, Baseline		01/30/26	01/30/26	1d	36	0	PM	Origami	PM			01/30/26	01/30/26
1.2.1.6		Blue	Not Started	0%	Update Automations & Dashboard		01/30/26	01/30/26	1d	36	0	PM	Origami	PM			01/30/26	01/30/26
1.2.1.7		Blue	Not Started	0%	Conduct External Schedule Review Call		02/05/26	02/05/26	1d	40, 36FS+2d,	0	PM	Origami	PM			02/05/26	02/05/26
1.2.1.8		Blue	Not Started	0%	Obtain Client Schedule Approval & Reset Baseline		02/06/26	02/06/26	1d	42	0	PM	Client	PM			02/06/26	02/06/26
1.2.1.9		Blue	Not Started	0%	Update SDM with Projected Go-Live Date		02/09/26	02/09/26	1d	43	0	PM	Origami	PM			02/09/26	02/09/26
1.2.2		Blue	Not Started	0%	Configure Security		01/22/26	07/16/26	126d		35d						01/22/26	09/03/26
1.2.2.1		Blue	Not Started	0%	User Security	TRUE	01/22/26	07/16/26	126d		35d						01/22/26	09/03/26
1.2.2.1.1		Blue	Not Started	0%	Configure Users (X full / X light)		01/22/26	07/16/26	126d		35d						01/22/26	09/03/26
1.2.2.1.1.1		Blue	Not Started	0%	Configure Project Team Users		01/22/26	02/04/26	10d		0						01/22/26	02/04/26
1.2.2.1.1.1.1		Blue	Not Started	0%	Identify System Administrator: [Name of SysAdmin]		01/22/26	01/28/26	5d	22,	0	Client	Client	Client			01/22/26	01/28/26
1.2.2.1.1.1.2		Blue	Not Started	0%	Identify Project Team Users		01/22/26	01/28/26	5d	22,	0	Client	Client	Client			01/22/26	01/28/26
1.2.2.1.1.1.3		Blue	Not Started	0%	Configure Project Team Users		01/29/26	02/02/26	3d	50	0	NPP BSA	Origami	NPP BSA			01/29/26	02/02/26
1.2.2.1.1.1.4		Blue	Not Started	0%	Configuration Test Project Team Users		02/03/26	02/04/26	2d	51	0	Client	Client	Client			02/03/26	02/04/26
1.2.2.1.1.1.5		Blue	Not Started	0%	Signoff on Project Team Users		02/04/26	02/04/26	0	52	0	Client	Client	IL			02/04/26	02/04/26
1.2.2.1.1.2		Blue	Not Started	0%	Configure Remaining Users		06/05/26	07/16/26	30d		35d						07/24/26	09/03/26
1.2.2.1.1.2.1		Blue	Not Started	0%	Identify Users		06/05/26	07/02/26	20d	, , , 65FS-30d	35d	Client	Client	Client			07/24/26	08/20/26
1.2.2.1.1.2.2		Blue	Not Started	0%	Configure Users		07/03/26	07/09/26	5d	55	35d	NPP BSA	Origami	NPP BSA			08/21/26	08/27/26
1.2.2.1.1.2.3		Blue	Not Started	0%	Configuration Test Users		07/10/26	07/16/26	5d	56	35d	Client	Client	Client			08/28/26	09/03/26
1.2.2.1.1.2.4		Blue	Not Started	0%	Signoff on Remaining Users		07/16/26	07/16/26	0	57	35d	Client	Origami	Client			09/03/26	09/03/26
1.2.2.1.2		Blue	Not Started	0%	Configure Security Profiles (Up to X)		06/05/26	06/26/26	16d		35d						07/24/26	08/14/26
1.2.2.1.2.1		Blue	Not Started	0%	Design User Security Profiles		06/05/26	06/11/26	5d	55SS	35d	Client	Client	Client			07/24/26	07/30/26
1.2.2.1.2.2		Blue	Not Started	0%	Approve & Attach Design for User Security Profiles		06/12/26	06/12/26	1d	60	35d	Client	Client	Client			07/31/26	07/31/26
1.2.2.1.2.3		Blue	Not Started	0%	Configure User Security Profiles		06/15/26	06/19/26	5d	61	35d	NPP BSA	Origami	NPP BSA			08/03/26	08/07/26
1.2.2.1.2.4		Blue	Not Started	0%	Configuration Test User Security Profiles		06/22/26	06/26/26	5d	62	35d	Client	Client	Client			08/10/26	08/14/26
1.2.2.1.2.5		Blue	Not Started	0%	Signoff on User Security Profiles		06/26/26	06/26/26	0	63	35d	Client	Origami	Client			08/14/26	08/14/26
1.2.3		Blue	Not Started	0%	System Configuration - EHS Platform		04/03/26	07/16/26	75d		35d						02/11/26	09/03/26
1.2.3.1		Blue	Not Started	0%	Audit / Inspection/Observations Configuration (Up to X)	TRUE	04/03/26	05/01/26	21d		16d						04/27/26	05/25/26
1.2.3.1.1		Blue	Not Started	0%	Conduct Discovery - Audits/Inspections/Observations - EHS Safety Management		04/03/26	04/03/26	1d	, , , ,	16d	BSA	Origami	BSA			04/27/26	04/27/26
1.2.3.1.2		Blue	Not Started	0%	Design EHS Audits/Inspections/Observations - Safety Management		04/06/26	04/10/26	5d	67	16d	BSA	Origami	BSA			04/28/26	05/04/26
1.2.3.1.3		Blue	Not Started	0%	Approve & Attach Design EHS Audits/Inspections/Observations - Safety Management		04/13/26	04/17/26	5d	68	16d	BSA	Origami	BSA			05/05/26	05/11/26
1.2.3.1.4		Blue	Not Started	0%	Deploy EHS Audits/Inspections/Observations - Safety Management		04/20/26	04/24/26	5d	69	16d	NPP BSA	Origami	NPP BSA			05/12/26	05/18/26
1.2.3.1.5		Blue	Not Started	0%	Configuration Test EHS Audits/Inspections/Observations - Safety Management		04/27/26	05/01/26	5d	70	16d	Client	Client	Client			05/19/26	05/25/26
1.2.3.1.6		Blue	Not Started	0%	Signoff on EHS Audits/Inspections/Observations - Safety Management		05/01/26	05/01/26	0	71	16d	Client	Origami	Client			05/25/26	05/25/26
1.2.3.2		Blue	Not Started	0%	Fleet/Vehicles Form Configuration (incl Initial Load)	TRUE	04/03/26	05/20/26	34d		16d						04/27/26	06/11/26
1.2.3.2.1		Blue	Not Started	0%	Conduct Discovery - Fleet/Vehicles		04/03/26	04/03/26	1d	, , , ,	16d	IL	Origami	IL			04/27/26	04/27/26
1.2.3.2.2		Blue	Not Started	0%	Design Fleet/Vehicles Form		04/06/26	04/08/26	3d	74	16d	IL	Origami	IL			04/28/26	04/30/26
1.2.3.2.3		Blue	Not Started	0%	Approve & Attach Design for Fleet/Vehicles Form		04/09/26	04/09/26	1d	75	16d	Client	Client	Client			05/01/26	05/01/26
1.2.3.2.4		Blue	Not Started	0%	Configure Fleet/Vehicles Form		04/10/26	04/14/26	3d	76	16d	NPP BSA	Origami	NPP BSA			05/04/26	05/06/26
1.2.3.2.5		Blue	Not Started	0%	Configuration Test & Feedback Fleet/Vehicles Form		04/15/26	04/17/26	3d	77	16d	Client	Client	Client			05/07/26	05/11/26
1.2.3.2.6		Blue	Not Started	0%	One Round of Changes to Fleet/Vehicles Form		04/20/26	04/22/26	3d	78	16d	Client	Client	Client			05/12/26	05/14/26

This plan is provided for reference purposes only. A tailored plan will be delivered after selection and further scoping activities. This will be subject to sign-off and approval.

Origami Risk—Sample EHS Implementation Plan

WBS	At Risk	Task Health	Status	% Complete	Task Name	Deliverable	Start Date	End Date	Duration	Predecessors	Variance	Assigned To	Next Assigned	Role(s)	Risks	Assumptions	Baseline Start	Baseline Finish
1.2.3.2.7		Blue	Not Started	0%	Configuration Test Fleet/Vehicles Form		04/23/26	04/24/26	2d	79	16d	Client	Client	Client			05/15/26	05/18/26
1.2.3.2.8		Blue	Not Started	0%	Signoff on Fleet/Vehicles Form		04/24/26	04/24/26	0	80	16d	Client	Origami	Client			05/18/26	05/18/26
1.2.3.2.9		Blue	Not Started	0%	Initial Load Vehicle Data		04/03/26	05/20/26	34d		16d						04/27/26	06/11/26
1.2.3.2.9.1		Blue	Not Started	0%	Vehicle Import - Confirm & communicate SFTP account		04/03/26	04/03/26	1d	74SS	16d	NPP BSA	Origami	NPP BSA			04/27/26	04/27/26
1.2.3.2.9.2		Blue	Not Started	0%	Vehicle Import - Request sample file		04/06/26	04/06/26	1d	83	16d	Client	Client	Client			04/28/26	04/28/26
1.2.3.2.9.3		Blue	Not Started	0%	Vehicle Import - Deliver sample file		04/28/26	04/28/26	1d	84FS +15d	16d	Client	Client	Client			05/20/26	05/20/26
1.2.3.2.9.4		Blue	Not Started	0%	Vehicle Import - Design Interface		04/29/26	05/05/26	5d	85	16d	BSA/TC	Origami	BSA/TC			05/21/26	05/27/26
1.2.3.2.9.5		Blue	Not Started	0%	Approve & Attach Design for Vehicle Import		05/06/26	05/06/26	1d	86	16d	Client	Client	Client			05/28/26	05/28/26
1.2.3.2.9.6		Blue	Not Started	0%	Vehicle Import - Configure Interface		05/07/26	05/13/26	5d	87	16d	NPP BSA	Origami	NPP BSA			05/29/26	06/04/26
1.2.3.2.9.7		Blue	Not Started	0%	Vehicle Import - Configuration Test Interface		05/14/26	05/20/26	5d	88	16d	Client	Client	Client			06/05/26	06/11/26
1.2.3.2.9.8		Blue	Not Started	0%	Signoff on Vehicle Import		05/20/26	05/20/26	0	89	16d	Client	Origami	Client			06/11/26	06/11/26
1.2.3.3		Blue	Not Started	0%	Location Hierarchy Configuration	TRUE	04/03/26	05/15/26	31d		16d						04/27/26	06/08/26
1.2.3.3.1		Blue	Not Started	0%	Configure Location Hierarchy		04/03/26	05/15/26	31d		16d						04/27/26	06/08/26
1.2.3.3.1.1		Blue	Not Started	0%	Conduct Discovery - Location Hierarchy		04/03/26	04/03/26	1d	, , , ,	16d	IL	Origami	IL			04/27/26	04/27/26
1.2.3.3.1.2		Blue	Not Started	0%	Send Location Hierarchy		04/06/26	04/17/26	10d	93	16d	Client	Client	Client			04/28/26	05/11/26
1.2.3.3.1.3		Blue	Not Started	0%	Configure & Load Location Hierarchy		04/20/26	04/24/26	5d	94	16d	IL	Origami	IL			05/12/26	05/18/26
1.2.3.3.1.4		Blue	Not Started	0%	Configuration Test & Feedback Location Hierarchy		04/27/26	05/08/26	10d	95	16d	Client	Client	Client			05/19/26	06/01/26
1.2.3.3.1.5		Blue	Not Started	0%	One Round of Changes to Location Hierarchy		05/11/26	05/15/26	5d	96	16d	Client	Client	Client			06/02/26	06/08/26
1.2.3.3.1.6		Blue	Not Started	0%	Signoff on Location Hierarchy		05/15/26	05/15/26	0	97	16d	Client	Origami	Client			06/08/26	06/08/26
1.2.3.3.2		Blue	Not Started	0%	Configure Location Screens		04/03/26	05/05/26	23d		16d						04/27/26	05/27/26
1.2.3.3.2.1		Blue	Not Started	0%	Conduct Discovery - Locations		04/03/26	04/03/26	1d	, , , ,	16d	IL	Origami	IL			04/27/26	04/27/26
1.2.3.3.2.2		Blue	Not Started	0%	Design Location Screens		04/27/26	04/28/26	2d	95	16d	IL	Origami	IL			05/19/26	05/20/26
1.2.3.3.2.3		Blue	Not Started	0%	Approve & Attach Design for Location Screens		04/29/26	04/29/26	1d	101	16d	Client	Client	Client			05/21/26	05/21/26
1.2.3.3.2.4		Blue	Not Started	0%	Configure Location Screens		04/30/26	05/01/26	2d	102	16d	NPP BSA	Origami	NPP BSA			05/22/26	05/25/26
1.2.3.3.2.5		Blue	Not Started	0%	Configuration Test Location Screens		05/04/26	05/05/26	2d	103	16d	Client	Client	Client			05/26/26	05/27/26
1.2.3.3.2.6		Blue	Not Started	0%	Signoff on Location Screens		05/05/26	05/05/26	0	104	16d	Client	Origami	Client			05/27/26	05/27/26
1.2.3.4		Blue	Not Started	0%	Portal Configuration (Up to X Portals) [Modules]	TRUE	07/15/26	07/15/26	1d		1d						07/16/26	07/16/26
1.2.3.4.1		Blue	Not Started	0%	Configure external user access via Grant Access Links or Anonymous Portal.		07/15/26	07/15/26	1d		1d	IL	Origami	IL			07/16/26	07/16/26
1.2.3.5		Blue	Not Started	0%	Mail Merge / Forms / Letters (Up to X Documents)	TRUE	04/30/26	06/19/26	37d		35d						06/18/26	08/07/26
1.2.3.5.1		Blue	Not Started	0%	Conduct Discovery Session - Mail Merge		04/30/26	04/30/26	1d	138FS -10d,	35d	IL	Origami	IL			06/18/26	06/18/26
1.2.3.5.2		Blue	Not Started	0%	Send Mail Merge Letters/Forms		05/01/26	05/21/26	15d	109	35d	Client	Client	Client			06/19/26	07/09/26
1.2.3.5.3		Blue	Not Started	0%	Design Mail Merge Letters/Forms		05/22/26	05/28/26	5d	110	35d	IL	Origami	IL			07/10/26	07/16/26
1.2.3.5.4		Blue	Not Started	0%	Approve & Attach Design of Mail Merge Letters/Forms		05/29/26	05/29/26	1d	111	35d	Client	Client	Client			07/17/26	07/17/26
1.2.3.5.5		Blue	Not Started	0%	Tag Mail Merge Letters/Forms		06/01/26	06/12/26	10d	112	35d	NPP BSA	Origami	NPP BSA			07/20/26	07/31/26
1.2.3.5.6		Blue	Not Started	0%	Configuration Test Mail Merge Letters/Forms		06/15/26	06/19/26	5d	113	35d	Client	Client	Client			08/03/26	08/07/26
1.2.3.5.7		Blue	Not Started	0%	Signoff on Mail Merge Letters/Forms		06/19/26	06/19/26	0	114	35d	Client	Origami	Client			08/07/26	08/07/26
1.2.3.6		Blue	Not Started	0%	Report Configuration (Up to X Hours)	TRUE	04/23/26	07/16/26	61d		35d						06/11/26	09/03/26
1.2.3.6.1		Blue	Not Started	0%	Identify/Deliver Required Reports		04/23/26	06/03/26	30d	138FS -15d,	35d	Client	Client	Client			06/11/26	07/22/26
1.2.3.6.2		Blue	Not Started	0%	Conduct Discovery Session - Standard Reports		06/04/26	06/04/26	1d	117	35d	IL	Origami	IL			07/23/26	07/23/26
1.2.3.6.3		Blue	Not Started	0%	Design Reports		06/04/26	06/17/26	10d	117	35d	IL	Origami	IL			07/23/26	08/05/26
1.2.3.6.4		Blue	Not Started	0%	Approve & Attach Design for Reports		06/18/26	06/18/26	1d	119	35d	Client	Client	Client			08/06/26	08/06/26
1.2.3.6.5		Blue	Not Started	0%	Build Reports		06/19/26	07/02/26	10d	120	35d	NPP BSA	Origami	NPP BSA			08/07/26	08/20/26
1.2.3.6.6		Blue	Not Started	0%	Configuration Test Reports		07/03/26	07/16/26	10d	121	35d	Client	Client	Client			08/21/26	09/03/26
1.2.3.6.7		Blue	Not Started	0%	Signoff on Reports		07/16/26	07/16/26	0	122	35d	Client	Origami	Client			09/03/26	09/03/26
1.2.3.7		Blue	Not Started	0%	Dashboard Configuration (Up to X Hours)	TRUE	04/30/26	05/22/26	17d		35d						06/18/26	07/10/26
1.2.3.7.1		Blue	Not Started	0%	Conduct Discovery Session - Dashboards		04/30/26	04/30/26	1d	138FS -10d,	35d	IL	Origami	IL			06/18/26	06/18/26
1.2.3.7.2		Blue	Not Started	0%	Design Dashboards		05/01/26	05/07/26	5d	125	35d	IL	Origami	IL			06/19/26	06/25/26
1.2.3.7.3		Blue	Not Started	0%	Approve & Attach Design for Dashbaords		05/08/26	05/08/26	1d	126	35d	Client	Client	Client			06/26/26	06/26/26
1.2.3.7.4		Blue	Not Started	0%	Build Dashboards		05/11/26	05/15/26	5d	127	35d	NPP BSA	Origami	NPP BSA			06/29/26	07/03/26
1.2.3.7.5		Blue	Not Started	0%	Configuration Test Dashboards		05/18/26	05/22/26	5d	128	35d	Client	Client	Client			07/06/26	07/10/26
1.2.3.7.6		Blue	Not Started	0%	Signoff on Dashboards		05/22/26	05/22/26	0	129	35d	Client	Origami	Client			07/10/26	07/10/26
1.2.3.8		Blue	Not Started	0%	Workflow Configuration (Up to X Hours) [Domains]	TRUE	04/30/26	05/22/26	17d		35d						06/18/26	07/10/26
1.2.3.8.1		Blue	Not Started	0%	Conduct Discovery Session - Data Entry Events & Notifications		04/30/26	04/30/26	1d	138FS -10d,	35d	IL	Origami	IL			06/18/26	06/18/26
1.2.3.8.2		Blue	Not Started	0%	Design Data Entry Events & Notifications		05/01/26	05/07/26	5d	132	35d	IL	Origami	IL			06/19/26	06/25/26
1.2.3.8.3		Blue	Not Started	0%	Approve & Attach Design on Data Entry Events & Notifications		05/08/26	05/08/26	1d	133	35d	Client	Client	Client			06/26/26	06/26/26
1.2.3.8.4		Blue	Not Started	0%	Build Data Entry Events & Notifications		05/11/26	05/15/26	5d	134	35d	NPP BSA	Origami	NPP BSA			06/29/26	07/03/26
1.2.3.8.5		Blue	Not Started	0%	Configuration Test Data Entry Events & Notifications		05/18/26	05/22/26	5d	135	35d	Client	Client	Client			07/06/26	07/10/26
1.2.3.8.6		Blue	Not Started	0%	Signoff on Data Entry Events & Notifications		05/22/26	05/22/26	0	136	35d	Client	Origami	Client			07/10/26	07/10/26
1.2.4		Blue	Not Started	0%	System Configuration – Safety Management		02/11/26	05/13/26	66d		35d						02/11/26	07/01/26
1.2.4.1		Blue	Not Started	0%	Assets Configuration	TRUE	04/03/26	04/17/26	11d		16d						04/27/26	05/11/26
1.2.4.1.1		Blue	Not Started	0%	Conduct Discovery - Assets		04/03/26	04/03/26	1d	, , , ,	16d	IL	Origami	IL			04/27/26	04/27/26
1.2.4.1.2		Blue	Not Started	0%	Design Assets Screens		04/06/26	04/08/26	3d	140	16d	IL	Origami	IL			04/28/26	04/30/26
1.2.4.1.3		Blue	Not Started	0%	Approve & Attach Design for Assets Screens		04/09/26	04/09/26	1d	141	16d	Client	Client	Client			05/01/26	05/01/26
1.2.4.1.4		Blue	Not Started	0%	Configure Assets Screens		04/10/26	04/14/26	3d	142	16d	NPP BSA	Origami	NPP BSA			05/04/26	05/06/26
1.2.4.1.5		Blue	Not Started	0%	Configuration Test & Feedback Assets Screens		04/15/26	04/17/26	3d	143	16d	Client	Client	Client			05/07/26	05/11/26
1.2.4.1.6		Blue	Not Started	0%	One Round of Changes to Assets Screens		04/15/26	04/17/26	3d	143	16d	Client	Client	Client			05/07/26	05/11/26
1.2.4.1.7		Blue	Not Started	0%	Signoff on Assets Screens		04/17/26	04/17/26	0	145	16d	Client	Origami	Client			05/11/26	05/11/26
1.2.4.2		Blue	Not Started	0%	Incidents / Events Configuration	TRUE	02/11/26	03/06/26	18d		0						02/11/26	03/06/26
1.2.4.2.1		Blue	Not Started	0%	Conduct Discovery - EHS Incident Management		02/11/26	02/11/26	1d	,	0	NPP BSA	Origami	NPP BSA			02/11/26	02/11/26
1.2.4.2.2		Blue	Not Started	0%	Configure EHS Incident - Near Miss		02/12/26	03/06/26	17d		0						02/12/26	03/06/26
1.2.4.2.2.1		Blue	Not Started	0%	Design EHS Incident Mgt - Near Miss		02/12/26	02/16/26	3d	148	0	IL	Origami	IL			02/12/26	02/16/26
1.2.4.2.2.2		Blue	Not Started	0%	Approve & Attach Design for Near Miss		02/17/26	02/17/26	1d	150	0	Client	Client	Client			02/17/26	02/17/26
1.2.4.2.2.3		Blue	Not Started	0%	Deploy Near Miss		02/18/26	02/24/26	5d	151	0	NPP BSA	Origami	NPP BSA			02/18/26	02/24/26
1.2.4.2.2.4		Blue	Not Started	0%	Configuration Test & Feedback Near Miss		02/25/26	03/03/26	5d	152	0	Client	Client	Client			02/25/26	03/03/26
1.2.4.2.2.5		Blue	Not Started	0%	One Round of Changes to Near Miss		03/04/26	03/06/26	3d	153	0	Client	Client	Client			03/04/26	03/06/26
1.2.4.2.2.6		Blue	Not Started	0%	Signoff on Near Miss		03/06/26	03/06/26	0	154	0	Client	Origami	Client			03/06/26	03/06/26
1.2.4.2.3		Blue	Not Started	0%	Configure EHS Incident - Safety Observation		02/12/26	03/06/26	17d		0						02/12/26	03/06/26
1.2.4.2.3.1		Blue	Not Started	0%	Design EHS Incident Mgt - Safety Observation		02/12/26	02/16/26	3d	148	0	IL	Origami	IL			02/12/26	02/16/26
1.2.4.2.3.2		Blue	Not Started	0%	Approve & Attach Design for Safety Observation		02/17/26	02/17/26	1d	157	0	Client	Client	Client			02/17/26	02/17/26

This plan is provided for reference purposes only. A tailored plan will be delivered after selection and further scoping activities. This will be subject to sign-off and approval.

Origami Risk—Sample EHS Implementation Plan

Origami Risk

WBS	At Risk	Task Health	Status	% Complete	Task Name	Deliverable	Start Date	End Date	Duration	Predecessors	Variance	Assigned To	Next Assigned	Role(s)	Risks	Assumptions	Baseline Start	Baseline Finish
1.2.4.2.3.3		Blue	Not Started	0%	Deploy Safety Observation		02/18/26	02/24/26	5d	158	0	NPP BSA	Origami	NPP BSA			02/18/26	02/24/26
1.2.4.2.3.4		Blue	Not Started	0%	Configuration Test & Feedback Safety Observation		02/25/26	03/03/26	5d	159	0	Client	Client	Client			02/25/26	03/03/26
1.2.4.2.3.5		Blue	Not Started	0%	One Round of Changes to Safety Observation		03/04/26	03/06/26	3d	160	0	Client	Client	Client			03/04/26	03/06/26
1.2.4.2.3.6		Blue	Not Started	0%	Signoff on Safety Observation		03/06/26	03/06/26	0	161	0	Client	Origami	Client			03/06/26	03/06/26
1.2.4.2.4		Blue	Not Started	0%	Configure EHS Incident - Type XXX		02/12/26	03/06/26	17d		0						02/12/26	03/06/26
1.2.4.2.4.1		Blue	Not Started	0%	Design EHS Incident Mgt - Type XXX		02/12/26	02/16/26	3d	148	0	IL	Origami	IL			02/12/26	02/16/26
1.2.4.2.4.2		Blue	Not Started	0%	Approve & Attach Design for Type XXX		02/17/26	02/17/26	1d	164	0	Client	Client	Client			02/17/26	02/17/26
1.2.4.2.4.3		Blue	Not Started	0%	Deploy Type XXX		02/18/26	02/24/26	5d	165	0	NPP BSA	Origami	NPP BSA			02/18/26	02/24/26
1.2.4.2.4.4		Blue	Not Started	0%	Configuration Test & Feedback Type XXX		02/25/26	03/03/26	5d	166	0	Client	Client	Client			02/25/26	03/03/26
1.2.4.2.4.5		Blue	Not Started	0%	One Round of Changes to Type XXX		03/04/26	03/06/26	3d	167	0	Client	Client	Client			03/04/26	03/06/26
1.2.4.2.4.6		Blue	Not Started	0%	Signoff on Type XXX		03/06/26	03/06/26	0	168	0	Client	Origami	Client			03/06/26	03/06/26
1.2.4.3		Blue	Not Started	0%	Claims Configuration	TRUE	03/09/26	04/14/26	27d		35d						04/27/26	06/02/26
1.2.4.3.1		Blue	Not Started	0%	Conduct Discovery – Claims		03/09/26	03/09/26	1d	, , 147,	35d	IL	Origami	IL			04/27/26	04/27/26
1.2.4.3.2		Blue	Not Started	0%	Client Review & Mockup: Origami Best Practice Screens		03/09/26	03/09/26	1d	171SS	35d	IL	Origami	IL			04/27/26	04/27/26
1.2.4.3.3		Blue	Not Started	0%	Claim Type XXX		03/10/26	04/14/26	26d		35d						04/28/26	06/02/26
1.2.4.3.3.1		Blue	Not Started	0%	Design Claim Entry Type XXX		03/10/26	03/16/26	5d	171	35d	IL	Origami	IL			04/28/26	05/04/26
1.2.4.3.3.2		Blue	Not Started	0%	Approve & Attach Design for Claim Entry Type XXX		03/17/26	03/17/26	1d	174	35d	Client	Client	Client			05/05/26	05/05/26
1.2.4.3.3.3		Blue	Not Started	0%	Configure Claim Entry Type XXX		03/18/26	03/24/26	5d	175	35d	NPP BSA	Origami	NPP BSA			05/06/26	05/12/26
1.2.4.3.3.4		Blue	Not Started	0%	Configuration Test & Feedback Claim Entry Type XXX		03/25/26	04/07/26	10d	176	35d	Client	Client	Client			05/13/26	05/26/26
1.2.4.3.3.5		Blue	Not Started	0%	One Round of Changes to Claim Entry Type XXX		04/08/26	04/14/26	5d	177	35d	Client	Client	Client			05/27/26	06/02/26
1.2.4.3.3.6		Blue	Not Started	0%	Signoff on Claim Entry Type XXX		04/14/26	04/14/26	0	178	35d	Client	Origami	Client			06/02/26	06/02/26
1.2.4.3.4		Blue	Not Started	0%	Claim Type YYY		03/10/26	04/14/26	26d		35d						04/28/26	06/02/26
1.2.4.3.4.1		Blue	Not Started	0%	Design Claim Entry Type YYY		03/10/26	03/16/26	5d	171	35d	IL	Origami	IL			04/28/26	05/04/26
1.2.4.3.4.2		Blue	Not Started	0%	Approve & Attach Design for Claim Entry Type YYY		03/17/26	03/17/26	1d	181	35d	Client	Client	Client			05/05/26	05/05/26
1.2.4.3.4.3		Blue	Not Started	0%	Configure Claim Entry Type YYY		03/18/26	03/24/26	5d	182	35d	NPP BSA	Origami	NPP BSA			05/06/26	05/12/26
1.2.4.3.4.4		Blue	Not Started	0%	Configuration Test & Feedback Claim Entry Type YYY		03/25/26	04/07/26	10d	183	35d	Client	Client	Client			05/13/26	05/26/26
1.2.4.3.4.5		Blue	Not Started	0%	One Round of Changes to Claim Entry Type YYY		04/08/26	04/14/26	5d	184	35d	Client	Client	Client			05/27/26	06/02/26
1.2.4.3.4.6		Blue	Not Started	0%	Signoff on Claim Entry Type YYY		04/14/26	04/14/26	0	185	35d	Client	Origami	Client			06/02/26	06/02/26
1.2.4.3.5		Blue	Not Started	0%	Claim Type ZZZ		03/10/26	04/14/26	26d		35d						04/28/26	06/02/26
1.2.4.3.5.1		Blue	Not Started	0%	Design Claim Entry Type ZZZ		03/10/26	03/16/26	5d	171	35d	IL	Origami	IL			04/28/26	05/04/26
1.2.4.3.5.2		Blue	Not Started	0%	Approve & Attach Design for Claim Entry Type ZZZ		03/17/26	03/17/26	1d	188	35d	Client	Client	Client			05/05/26	05/05/26
1.2.4.3.5.3		Blue	Not Started	0%	Configure Claim Entry Type ZZZ		03/18/26	03/24/26	5d	189	35d	NPP BSA	Origami	NPP BSA			05/06/26	05/12/26
1.2.4.3.5.4		Blue	Not Started	0%	Configuration Test & Feedback Claim Entry Type ZZZ		03/25/26	04/07/26	10d	190	35d	Client	Client	Client			05/13/26	05/26/26
1.2.4.3.5.5		Blue	Not Started	0%	One Round of Changes to Claim Entry Type ZZZ		04/08/26	04/14/26	5d	191	35d	Client	Client	Client			05/27/26	06/02/26
1.2.4.3.5.6		Blue	Not Started	0%	Signoff on Claim Entry Type ZZZ		04/14/26	04/14/26	0	192	35d	Client	Origami	Client			06/02/26	06/02/26
1.2.4.4		Blue	Not Started	0%	Audit / Inspection / Observations Configuration – Safety Management	TRUE	02/11/26	03/11/26	21d		0						02/11/26	03/11/26
1.2.4.4.1		Blue	Not Started	0%	Conduct Discovery - Audits/Inspections/Observations - EHS Safety Management		02/11/26	02/11/26	1d	,	0	BSA	Origami	BSA			02/11/26	02/11/26
1.2.4.4.2		Blue	Not Started	0%	Design EHS Audits/Inspections/Observations - Safety Management		02/12/26	02/18/26	5d	195	0	BSA	Origami	BSA			02/12/26	02/18/26
1.2.4.4.3		Blue	Not Started	0%	Approve & Attach Design EHS Audits/Inspections/Observations – Safety Management		02/19/26	02/25/26	5d	196	0	BSA	Origami	BSA			02/19/26	02/25/26
1.2.4.4.4		Blue	Not Started	0%	Deploy EHS Audits/Inspections/Observations - Safety Management		02/26/26	03/04/26	5d	197	0	NPP BSA	Origami	NPP BSA			02/26/26	03/04/26
1.2.4.4.5		Blue	Not Started	0%	Configuration Test EHS Audits/Inspections/Observations - Safety Management		03/05/26	03/11/26	5d	198	0	Client	Client	Client			03/05/26	03/11/26
1.2.4.4.6		Blue	Not Started	0%	Signoff on EHS Audits/Inspections/Observations - Safety Management		03/11/26	03/11/26	0	199	0	Client	Origami	Client			03/11/26	03/11/26
1.2.4.5		Blue	Not Started	0%	Trainings & Certifications Configuration	TRUE	02/12/26	03/12/26	21d		0						02/12/26	03/12/26
1.2.4.5.1		Blue	Not Started	0%	Conduct Discovery - EHS EHS Trainings & Certifications		02/12/26	02/12/26	1d	195	0	BSA	Origami	BSA			02/12/26	02/12/26
1.2.4.5.2		Blue	Not Started	0%	Design EHS Trainings & Certifications		02/13/26	02/19/26	5d	202	0	BSA	Origami	BSA			02/13/26	02/19/26
1.2.4.5.3		Blue	Not Started	0%	Approve & Attach Design EHS Trainings & Certifications		02/20/26	02/26/26	5d	203	0	BSA	Origami	BSA			02/20/26	02/26/26
1.2.4.5.4		Blue	Not Started	0%	Deploy EHS Trainings & Certifications		02/27/26	03/05/26	5d	204	0	NPP BSA	Origami	NPP BSA			02/27/26	03/05/26
1.2.4.5.5		Blue	Not Started	0%	Configuration Test EHS Trainings & Certifications		03/06/26	03/12/26	5d	205	0	Client	Client	Client			03/06/26	03/12/26
1.2.4.5.6		Blue	Not Started	0%	Signoff on EHS Trainings & Certifications		03/12/26	03/12/26	0	206	0	Client	Origami	Client			03/12/26	03/12/26
1.2.4.6		Blue	Not Started	0%	Root Cause Analysis (RCA) Configuration	TRUE	02/12/26	03/12/26	21d		0						02/12/26	03/12/26
1.2.4.6.1		Blue	Not Started	0%	Conduct Discovery - EHS Root Cause Analysis & Investigations		02/12/26	02/12/26	1d	148	0	BSA	Origami	BSA			02/12/26	02/12/26
1.2.4.6.2		Blue	Not Started	0%	Design EHS Root Cause Analysis & Investigations		02/13/26	02/19/26	5d	209	0	BSA	Origami	BSA			02/13/26	02/19/26
1.2.4.6.3		Blue	Not Started	0%	Approve & Attach Design EHS Root Cause Analysis & Investigations		02/20/26	02/26/26	5d	210	0	BSA	Origami	BSA			02/20/26	02/26/26
1.2.4.6.4		Blue	Not Started	0%	Deploy EHS Root Cause Analysis & Investigations		02/27/26	03/05/26	5d	211	0	NPP BSA	Origami	NPP BSA			02/27/26	03/05/26
1.2.4.6.5		Blue	Not Started	0%	Configuration Test EHS Root Cause Analysis & Investigations		03/06/26	03/12/26	5d	212	0	Client	Client	Client			03/06/26	03/12/26
1.2.4.6.6		Blue	Not Started	0%	Signoff on EHS Root Cause Analysis & Investigations		03/12/26	03/12/26	0	213	0	Client	Origami	Client			03/12/26	03/12/26
1.2.4.7		Blue	Not Started	0%	CAPA / Task Management Configuration	TRUE	02/13/26	03/13/26	21d		0						02/13/26	03/13/26
1.2.4.7.1		Blue	Not Started	0%	Conduct Discovery - EHS Corrective Actions/Tasks		02/13/26	02/13/26	1d	209	0	BSA	Origami	BSA			02/13/26	02/13/26
1.2.4.7.2		Blue	Not Started	0%	Design EHS CAPA / Task Management		02/16/26	02/20/26	5d	216	0	BSA	Origami	BSA			02/16/26	02/20/26
1.2.4.7.3		Blue	Not Started	0%	Approve & Attach Design EHS CAPA / Task Management		02/23/26	02/27/26	5d	217	0	BSA	Origami	BSA			02/23/26	02/27/26
1.2.4.7.4		Blue	Not Started	0%	Deploy EHS CAPA / Task Management		03/02/26	03/06/26	5d	218	0	NPP BSA	Origami	NPP BSA			03/02/26	03/06/26
1.2.4.7.5		Blue	Not Started	0%	Configuration Test EHS CAPA / Task Management		03/09/26	03/13/26	5d	219	0	Client	Client	Client			03/09/26	03/13/26
1.2.4.7.6		Blue	Not Started	0%	Signoff on EHS CAPA / Task Management		03/13/26	03/13/26	0	220	0	Client	Origami	Client			03/13/26	03/13/26
1.2.4.8		Blue	Not Started	0%	Driver Qualification File (DQF) Configuration	TRUE	02/13/26	03/13/26	21d		0						02/13/26	03/13/26
1.2.4.8.1		Blue	Not Started	0%	Conduct Discovery – EHS Driver Qualifications File (DQF)		02/13/26	02/13/26	1d	202	0	BSA	Origami	BSA			02/13/26	02/13/26
1.2.4.8.2		Blue	Not Started	0%	Design EHS Driver Qualifications File (DQF)		02/16/26	02/20/26	5d	223	0	BSA	Origami	BSA			02/16/26	02/20/26
1.2.4.8.3		Blue	Not Started	0%	Approve & Attach Design EHS Driver Qualifications File (DQF)		02/23/26	02/27/26	5d	224	0	BSA	Origami	BSA			02/23/26	02/27/26
1.2.4.8.4		Blue	Not Started	0%	Deploy EHS Driver Qualifications File (DQF)		03/02/26	03/06/26	5d	225	0	NPP BSA	Origami	NPP BSA			03/02/26	03/06/26
1.2.4.8.5		Blue	Not Started	0%	Configuration Test EHS Driver Qualifications File (DQF)		03/09/26	03/13/26	5d	226	0	Client	Client	Client			03/09/26	03/13/26
1.2.4.8.6		Blue	Not Started	0%	Signoff on EHS Driver Qualifications File (DQF)		03/13/26	03/13/26	0	227	0	Client	Origami	Client			03/13/26	03/13/26
1.2.4.9		Blue	Not Started	0%	OSHA Reporting Configuration	TRUE	04/15/26	05/13/26	21d		35d						06/03/26	07/01/26
1.2.4.9.1		Blue	Not Started	0%	Conduct Discovery - OSHA Reporting/Tracking		04/15/26	04/15/26	1d	, 170,	35d	IL	Origami	IL			06/03/26	06/03/26
1.2.4.9.2		Blue	Not Started	0%	Configure OSHA Reporting/Tracking		04/16/26	05/06/26	15d	230	35d	IL	Origami	IL			06/04/26	06/24/26
1.2.4.9.3		Blue	Not Started	0%	Configuration Test OSHA Reporting/Tracking		05/07/26	05/13/26	5d	231	35d	Client	Client	Client			06/25/26	07/01/26
1.2.4.9.4		Blue	Not Started	0%	Signoff on OSHA Reporting/Tracking		05/13/26	05/13/26	0	232	35d	Client	Origami	Client			07/01/26	07/01/26
1.2.4.10		Blue	Not Started	0%	Safety Meetings Configuration	TRUE	02/16/26	03/16/26	21d		0						02/16/26	03/16/26
1.2.4.10.1		Blue	Not Started	0%	Conduct Discovery - EHS Safety Meetings		02/16/26	02/16/26	1d	223	0	BSA	Origami	BSA			02/16/26	02/16/26
1.2.4.10.2		Blue	Not Started	0%	Design EHS Safety Meetings		02/17/26	02/23/26	5d	235	0	BSA	Origami	BSA			02/17/26	02/23/26
1.2.4.10.3		Blue	Not Started	0%	Approve & Attach Design EHS Safety Meetings		02/24/26	03/02/26	5d	236	0	BSA	Origami	BSA			02/24/26	03/02/26

This plan is provided for reference purposes only. A tailored plan will be delivered after selection and further scoping activities. This will be subject to sign-off and approval.

Origami Risk—Sample EHS Implementation Plan

Origami Risk

WBS	At Risk	Task Health	Status	% Complete	Task Name	Deliverable	Start Date	End Date	Duration	Predecessors	Variance	Assigned To	Next Assigned	Role(s)	Risks	Assumptions	Baseline Start	Baseline Finish
1.2.4.10.4		Blue	Not Started	0%	Deploy EHS Safety Meetings		03/03/26	03/09/26	5d	237	0	NPP BSA	Origami	NPP BSA			03/03/26	03/09/26
1.2.4.10.5		Blue	Not Started	0%	Configuration Test EHS Safety Meetings		03/10/26	03/16/26	5d	238	0	Client	Client	Client			03/10/26	03/16/26
1.2.4.10.6		Blue	Not Started	0%	Signoff on EHS Safety Meetings		03/16/26	03/16/26	0	239	0	Client	Origami	Client			03/16/26	03/16/26
1.2.5		Blue	Not Started	0%	System Configuration – Process Safety Management		02/11/26	03/11/26	21d		0						02/11/26	03/11/26
1.2.5.1		Blue	Not Started	0%	Audit / Inspection / Observations Configuration – Process Safety Management	TRUE	02/11/26	03/11/26	21d		0						02/11/26	03/11/26
1.2.5.1.1		Blue	Not Started	0%	Conduct Discovery - Audits/Inspections/Observations - Process Safety Management		02/11/26	02/11/26	1d	,	0	BSA	Origami	BSA			02/11/26	02/11/26
1.2.5.1.2		Blue	Not Started	0%	Design Audits/Inspections/Observations - Process Safety Management		02/12/26	02/18/26	5d	243	0	BSA	Origami	BSA			02/12/26	02/18/26
1.2.5.1.3		Blue	Not Started	0%	Approve & Attach Design Audits/Inspections/Observations - Process Safety		02/19/26	02/25/26	5d	244	0	BSA	Origami	BSA			02/19/26	02/25/26
1.2.5.1.4		Blue	Not Started	0%	Deploy Audits/Inspections/Observations - Process Safety Management		02/26/26	03/04/26	5d	245	0	NPP BSA	Origami	NPP BSA			02/26/26	03/04/26
1.2.5.1.5		Blue	Not Started	0%	Configuration Test Audits/Inspections/Observations - Process Safety Management		03/05/26	03/11/26	5d	246	0	Client	Client	Client			03/05/26	03/11/26
1.2.5.1.6		Blue	Not Started	0%	Signoff on Audits/Inspections/Observations - Process Safety Management		03/11/26	03/11/26	0	247	0	Client	Origami	Client			03/11/26	03/11/26
1.2.5.2		Blue	Not Started	0%	Pre-Task Planning Configuration	TRUE	02/11/26	03/11/26	21d		0						02/11/26	03/11/26
1.2.5.2.1		Blue	Not Started	0%	Conduct Discovery - Pre-Task Planning		02/11/26	02/11/26	1d	,	0	BSA	Origami	BSA			02/11/26	02/11/26
1.2.5.2.2		Blue	Not Started	0%	Design Pre-Task Planning		02/12/26	02/18/26	5d	250	0	BSA	Origami	BSA			02/12/26	02/18/26
1.2.5.2.3		Blue	Not Started	0%	Approve & Attach Design Pre-Task Planning		02/19/26	02/25/26	5d	251	0	BSA	Origami	BSA			02/19/26	02/25/26
1.2.5.2.4		Blue	Not Started	0%	Deploy Pre-Task Planning		02/26/26	03/04/26	5d	252	0	NPP BSA	Origami	NPP BSA			02/26/26	03/04/26
1.2.5.2.5		Blue	Not Started	0%	Configuration Test Pre-Task Planning		03/05/26	03/11/26	5d	253	0	Client	Client	Client			03/05/26	03/11/26
1.2.5.2.6		Blue	Not Started	0%	Signoff on Pre-Task Planning		03/11/26	03/11/26	0	254	0	Client	Origami	Client			03/11/26	03/11/26
1.2.5.3		Blue	Not Started	0%	Job Safety Analysis (JSA) Configuration	TRUE	02/11/26	03/11/26	21d		0						02/11/26	03/11/26
1.2.5.3.1		Blue	Not Started	0%	Conduct Discovery - Job Safety Analysis (JSA)		02/11/26	02/11/26	1d	,	0	BSA	Origami	BSA			02/11/26	02/11/26
1.2.5.3.2		Blue	Not Started	0%	Design Job Safety Analysis (JSA)		02/12/26	02/18/26	5d	257	0	BSA	Origami	BSA			02/12/26	02/18/26
1.2.5.3.3		Blue	Not Started	0%	Approve & Attach Design Job Safety Analysis (JSA)		02/19/26	02/25/26	5d	258	0	BSA	Origami	BSA			02/19/26	02/25/26
1.2.5.3.4		Blue	Not Started	0%	Deploy Job Safety Analysis (JSA)		02/26/26	03/04/26	5d	259	0	NPP BSA	Origami	NPP BSA			02/26/26	03/04/26
1.2.5.3.5		Blue	Not Started	0%	Configuration Test Job Safety Analysis (JSA)		03/05/26	03/11/26	5d	260	0	Client	Client	Client			03/05/26	03/11/26
1.2.5.3.6		Blue	Not Started	0%	Signoff on Job Safety Analysis (JSA)		03/11/26	03/11/26	0	261	0	Client	Origami	Client			03/11/26	03/11/26
1.2.5.4		Blue	Not Started	0%	Lockout / Tagout (LOTO) Configuration	TRUE	02/12/26	03/06/26	17d		0						02/12/26	03/06/26
1.2.5.4.1		Blue	Not Started	0%	Conduct Discovery - Lockout/Tagout (LOTO)		02/12/26	02/12/26	1d	257	0	BSA	Origami	BSA			02/12/26	02/12/26
1.2.5.4.2		Blue	Not Started	0%	Design Lockout/Tagout (LOTO)		02/13/26	02/19/26	5d	264	0	BSA	Origami	BSA			02/13/26	02/19/26
1.2.5.4.3		Blue	Not Started	0%	Approve & Attach Design Lockout/Tagout (LOTO)		02/20/26	02/26/26	5d	265	0	NPP BSA	Origami	NPP BSA			02/20/26	02/26/26
1.2.5.4.4		Blue	Not Started	0%	Configuration Test Lockout/Tagout (LOTO)		02/27/26	03/05/26	5d	266	0	Client	Client	Client			02/27/26	03/05/26
1.2.5.4.5		Blue	Not Started	0%	Singoff on Lockout/Tagout (LOTO)		03/06/26	03/06/26	1d	267	0	Client	Client	Client			03/06/26	03/06/26
1.2.5.5		Blue	Not Started	0%	Permit to Work Configuration	TRUE	02/13/26	03/06/26	16d		0						02/13/26	03/06/26
1.2.5.5.1		Blue	Not Started	0%	Conduct Discovery - Permit to Work		02/13/26	02/13/26	1d	264	0	BSA	Origami	BSA			02/13/26	02/13/26
1.2.5.5.2		Blue	Not Started	0%	Design Permit to Work		02/16/26	02/20/26	5d	270	0	BSA	Origami	BSA			02/16/26	02/20/26
1.2.5.5.3		Blue	Not Started	0%	Approve & Attach Design Permit to Work		02/23/26	02/27/26	5d	271	0	NPP BSA	Origami	NPP BSA			02/23/26	02/27/26
1.2.5.5.4		Blue	Not Started	0%	Configuration Test Permit to Work		03/02/26	03/06/26	5d	272	0	Client	Client	Client			03/02/26	03/06/26
1.2.5.5.5		Blue	Not Started	0%	Signoff on Permit to Work		03/06/26	03/06/26	0	273	0	Client	Origami	Client			03/06/26	03/06/26
1.2.6		Blue	Not Started	0%	System Configuration – Occupational Health		02/11/26	03/04/26	16d		3d						02/11/26	03/09/26
1.2.6.1		Blue	Not Started	0%	Audit / Inspection Configuration – Occupational Health	TRUE	02/11/26	03/04/26	16d		0						02/11/26	03/04/26
1.2.6.1.1		Blue	Not Started	0%	Conduct Discovery - EHS Audit/Inspections/Observations - Occupational Health		02/11/26	02/11/26	1d	,	0	BSA	Origami	BSA			02/11/26	02/11/26
1.2.6.1.2		Blue	Not Started	0%	Design EHS Audit/Inspections/Observations - Occupational Health		02/12/26	02/18/26	5d	277	0	BSA	Origami	BSA			02/12/26	02/18/26
1.2.6.1.3		Blue	Not Started	0%	Approve & Attach Design EHS Audit/Inspections/Observations - Occupational Health		02/19/26	02/25/26	5d	278	0	BSA	Origami	BSA			02/19/26	02/25/26
1.2.6.1.4		Blue	Not Started	0%	Configuration Test EHS Audit/Inspections/Observations - Occupational Health		02/26/26	03/04/26	5d	279	0	Client	Client	Client			02/26/26	03/04/26
1.2.6.1.5		Blue	Not Started	0%	Signoff on EHS Audit/Inspections/Observations - Occupational Health		03/04/26	03/04/26	0	280	0	Client	Origami	Client			03/04/26	03/04/26
1.2.7		Blue	Not Started	0%	System Configuration – Environmental & Regulatory Compliance		02/11/26	03/12/26	22d		0						02/11/26	03/12/26
1.2.7.1		Blue	Not Started	0%	Configure EHS Environmental Permit	TRUE	02/11/26	03/04/26	16d		0						02/11/26	03/04/26
1.2.7.1.1		Blue	Not Started	0%	Conduct Discovery – EHS Environmental Permit		02/11/26	02/11/26	1d	,	0	BSA	Origami	BSA			02/11/26	02/11/26
1.2.7.1.2		Blue	Not Started	0%	Design EHS Environmental Permit		02/12/26	02/18/26	5d	284	0	BSA	Origami	BSA			02/12/26	02/18/26
1.2.7.1.3		Blue	Not Started	0%	Approve & Attach Design EHS Environmental Permit		02/19/26	02/25/26	5d	285	0	BSA	Origami	BSA			02/19/26	02/25/26
1.2.7.1.4		Blue	Not Started	0%	Configuration Test EHS Environmental Permit		02/26/26	03/04/26	5d	286	0	Client	Client	Client			02/26/26	03/04/26
1.2.7.1.5		Blue	Not Started	0%	Signoff on EHS Environmental Permit		03/04/26	03/04/26	0	287	0	Client	Origami	Client			03/04/26	03/04/26
1.2.7.2		Blue	Not Started	0%	Regulatory Compliance Library Configuration	TRUE	02/13/26	03/06/26	16d		0						02/13/26	03/06/26
1.2.7.2.1		Blue	Not Started	0%	Conduct Discovery – EHS Regulatory Compliance Library		02/13/26	02/13/26	1d	296	0	BSA	Origami	BSA			02/13/26	02/13/26
1.2.7.2.2		Blue	Not Started	0%	Design EHS Regulatory Compliance Library		02/16/26	02/20/26	5d	290	0	BSA	Origami	BSA			02/16/26	02/20/26
1.2.7.2.3		Blue	Not Started	0%	Approve & Attach Design EHS Regulatory Compliance Library		02/23/26	02/27/26	5d	291	0	BSA	Origami	BSA			02/23/26	02/27/26
1.2.7.2.4		Blue	Not Started	0%	Configuration Test EHS Regulatory Compliance Library		03/02/26	03/06/26	5d	292	0	Client	Client	Client			03/02/26	03/06/26
1.2.7.2.5		Blue	Not Started	0%	Signoff on EHS Regulatory Compliance Library		03/06/26	03/06/26	0	293	0	Client	Origami	Client			03/06/26	03/06/26
1.2.7.3		Blue	Not Started	0%	Audits / Inspections Configuration – Environmental Management	TRUE	02/12/26	03/12/26	21d		0						02/12/26	03/12/26
1.2.7.3.1		Blue	Not Started	0%	Conduct Discovery - EHS Audits/Inspections/Observations - Environmental		02/12/26	02/12/26	1d	284	0	BSA	Origami	BSA			02/12/26	02/12/26
1.2.7.3.2		Blue	Not Started	0%	Design EHS Audits/Inspections/Observations - Environmental		02/13/26	02/19/26	5d	296	0	BSA	Origami	BSA			02/13/26	02/19/26
1.2.7.3.3		Blue	Not Started	0%	Approve & Attach Design EHS Audits/Inspections/Observations - Environmental		02/20/26	02/26/26	5d	297	0	BSA	Origami	BSA			02/20/26	02/26/26
1.2.7.3.4		Blue	Not Started	0%	Deploy EHS Audits/Inspections/Observations - Environmental		02/27/26	03/05/26	5d	298	0	BSA	Origami	BSA			02/27/26	03/05/26
1.2.7.3.5		Blue	Not Started	0%	Configuration Test EHS Audits/Inspections/Observations - Environmental		03/06/26	03/12/26	5d	299	0	Client	Client	Client			03/06/26	03/12/26
1.2.7.3.6		Blue	Not Started	0%	Signoff on EHS Audits/Inspections/Observations - Environmental		03/12/26	03/12/26	0	300	0	Client	Origami	Client			03/12/26	03/12/26
1.2.8		Blue	Not Started	0%	Prepare for Deployment		05/29/26	08/11/26	53d		35d				The Go Live Date should be "Id		07/17/26	09/29/26
1.2.8.1		Blue	Not Started	0%	Prepare Go Live Plan		05/29/26	06/22/26	17d		35d						07/17/26	08/10/26
1.2.8.1.1		Blue	Not Started	0%	Prepare Go Live Plan		05/29/26	05/29/26	1d	311FS-35d	35d	PM	Origami	PM			07/17/26	07/17/26
1.2.8.1.2		Blue	Not Started	0%	Conduct Go Live Planning Event		06/05/26	06/05/26	1d	311FS-30d	35d	PM	Origami	PM			07/24/26	07/24/26
1.2.8.1.3		Blue	Not Started	0%	Approve Go Live Plan		06/22/26	06/22/26	1d	305FS+10d	35d	Client	Origami	Client			08/10/26	08/10/26
1.2.8.2		Blue	Not Started	0%	Validate Go-Live Date		06/19/26	07/16/26	20d		35d						08/07/26	09/03/26
1.2.8.2.1		Blue	Not Started	0%	Validate Go-Live Date with Origami Team		06/19/26	06/19/26	1d	311FS-20d	35d	PM	Origami	PM			08/07/26	08/07/26
1.2.8.2.2		Blue	Not Started	0%	Validate Go-Live Date with Origami Team		06/19/26	06/19/26	1d	311FS-20d	35d	PM	Origami	PM			08/07/26	08/07/26
1.2.8.2.3		Blue	Not Started	0%	SDM Go-Live Verification		07/10/26	07/10/26	1d	311FS-5d	35d	SDM	Origami	SDM			08/28/26	08/28/26
1.2.8.2.4		Blue	Not Started	0%	Obtain SDM Configuration Complete Verification / Signoff		07/16/26	07/16/26	0	, , 45, , 65, 138,	35d	PM	Origami	PM			09/03/26	09/03/26
1.2.8.3		Blue	Not Started	0%	Prepare End User Training	TRUE	06/19/26	06/25/26	5d		35d						08/07/26	08/13/26
1.2.8.3.1		Blue	Not Started	0%	Schedule End User Training		06/19/26	06/19/26	1d	311FS-20d	35d	Client	Client	Client			08/07/26	08/07/26
1.2.8.3.2		Blue	Not Started	0%	Develop End User Training Content (incl FCT)		06/25/26	06/25/26	1d	311FF-15d	35d	Client	Client	Client			08/13/26	08/13/26
1.2.8.4		Blue	Not Started	0%	End-to-End Testing (E2E) & Support (Up to XX hours)	TRUE	07/03/26	08/06/26	25d		35d						08/21/26	09/24/26
1.2.8.4.1		Blue	Not Started	0%	Conduct E2E Training w/ Client (incl FCT)		07/03/26	07/03/26	1d	311FS+10d	35d	IL	Origami	IL			08/21/26	08/21/26

This plan is provided for reference purposes only. A tailored plan will be delivered after selection and further scoping activities. This will be subject to sign-off and approval.

Origami Risk—Sample EHS Implementation Plan

Origami Risk

WBS	At Risk	Task Health	Status	% Complete	Task Name	Deliverable	Start Date	End Date	Duration	Predecessors	Variance	Assigned To	Next Assigned	Role(s)	Risks	Assumptions	Baseline Start	Baseline Finish
1.2.8.4.2		Blue	Not Started	0%	Conduct E2E Testing - Round 1		07/17/26	07/23/26	5d	311	35d	Client	Client	Client			09/04/26	09/10/26
1.2.8.4.3		Blue	Not Started	0%	Resolve E2E Testing Issues - Round 1		07/24/26	07/28/26	3d	317	35d	IL	Origami				09/11/26	09/15/26
1.2.8.4.4		Blue	Not Started	0%	Conduct E2E Testing - Round 2		07/29/26	08/04/26	5d	318	35d	Client	Client				09/16/26	09/22/26
1.2.8.4.5		Blue	Not Started	0%	Resolve E2E Testing Issues - Round 2		08/05/26	08/06/26	2d	319	35d	IL	Origami	IL			09/23/26	09/24/26
1.2.8.5		Blue	Not Started	0%	Obtain Go Live Approval		08/07/26	08/11/26	3d		35d						09/25/26	09/29/26
1.2.8.5.1		Blue	Not Started	0%	Ensure ALL Approvals are Complete for GO LIVE		08/07/26	08/07/26	1d	311, 306, 320	35d	PM	Client	PM			09/25/26	09/25/26
1.2.8.5.2		Blue	Not Started	0%	Conduct Go/No Go Call & Obtain E2E Testing Sign-off		08/11/26	08/11/26	0	322FS +2d	35d	PM	Origami	PM			09/29/26	09/29/26
1.2.8.5.3		Blue	Not Started	0%	Communicate to to End Users		08/11/26	08/11/26	0	323FF	35d	Client	Client	Client			09/29/26	09/29/26
1.2.9		Blue	Not Started	0%	Deployment		08/07/26	09/10/26	25d		35d				The Go Live Date should be "Id		09/25/26	10/29/26
1.2.9.1		Blue	Not Started	0%	Conduct End User Training (Up to XX Hours)	TRUE	08/07/26	08/10/26	2d		35d						09/25/26	09/28/26
1.2.9.1.1		Blue	Not Started	0%	Conduct End User Training (incl FCT)		08/07/26	08/10/26	2d	320	35d	IL	Origami	IL			09/25/26	09/28/26
1.2.9.1.2		Blue	Not Started	0%	Signoff on End User Training		08/10/26	08/10/26	0	327	35d	Client	Client	Client			09/28/26	09/28/26
1.2.9.2		Blue	Not Started	0%	Perform Cutover Activities		08/11/26	08/11/26	0		35d						09/29/26	09/29/26
1.2.9.2.1		Blue	Not Started	0%	Client Specific Activities		08/11/26	08/11/26	0		35d						09/29/26	09/29/26
1.2.9.2.1.1		Blue	Not Started	0%	Example: Client Change Controls & Approvals		08/11/26	08/11/26	0	321	35d	Client	Origami	Client			09/29/26	09/29/26
1.2.9.2.1.2		Blue	Not Started	0%	Example: Client Vendor Feeds Move to Production		08/11/26	08/11/26	0	321	35d	Client	Origami	Client			09/29/26	09/29/26
1.2.9.2.1.3		Blue	Not Started	0%	Add as Needed		08/11/26	08/11/26	0	321	35d	Client	Origami	Client			09/29/26	09/29/26
1.2.9.3		Blue	Not Started	0%	Execute Go Live		08/12/26	08/12/26	1d		35d						09/30/26	09/30/26
1.2.9.3.1		Red	Not Started	0%	Target Go Live Date				1d	0		PM	Origami					
1.2.9.3.2		Blue	Not Started	0%	Projected Go Live Date		08/12/26	08/12/26	1d	315, 321, 326,	35d	IL	Origami	IL			09/30/26	09/30/26
1.2.9.4		Blue	Not Started	0%	Go-Live Support & Post Live Activities	TRUE	08/12/26	09/10/26	22d		35d						09/30/26	10/29/26
1.2.9.4.1		Blue	Not Started	0%	Schedule Internal/External Implementation Retrospectives		08/14/26	08/14/26	0	336FS +2d	35d	PM	Origami	PM			10/02/26	10/02/26
1.2.9.4.2		Blue	Not Started	0%	Provide Go Live Support (incl FCT)		08/12/26	09/10/26	22d	336SS	35d	IL	Client	IL			09/30/26	10/29/26
1.2.9.4.3		Blue	Not Started	0%	Complete Account Overview Document		08/21/26	08/21/26	1d	341FS -5d	35d	PM	Origami	PM			10/09/26	10/09/26
1.2.9.4.4		Blue	Not Started	0%	Conduct Client Transition Internal Meeting (PS to CS)		08/27/26	08/27/26	1d	336FS +10d	35d	IL	Origami	IL			10/15/26	10/15/26
1.2.9.4.5		Blue	Not Started	0%	Conduct Transition to Client Success Meeting		09/03/26	09/03/26	1d	336FS +15d	35d	PM	Origami	PM			10/22/26	10/22/26
2		Blue	Not Started	0%	Perform Project Closure		06/16/26	10/02/26	79d		62d						05/21/26	12/29/26
2.1		Blue	Not Started	0%	Schedule Client Implementation Retrospective Assessment		07/16/26	07/16/26	1d	,336FS -20d,	62d	PM	Origami	PM			10/12/26	10/12/26
2.2		Blue	Not Started	0%	Conduct Internal Implementation Retrospective Assessment		08/28/26	08/28/26	1d	,336FS +11d,	62d	PM	Origami	IL			11/24/26	11/24/26
2.3		Blue	Not Started	0%	Send Client Closure Email		09/24/26	09/24/26	1d	,336FS +30d,	62d	PM	Origami	PM			12/21/26	12/21/26
2.4		Blue	Not Started	0%	Consider Lattice Feedback for Project Team Members		06/16/26	06/16/26	1d		-18d	PM	Origami	PM			05/21/26	05/21/26
2.5		Blue	Not Started	0%	Move sheet to Closed folder		10/02/26	10/02/26	1d	346FS +5d	62d	PM	Origami	PM			12/29/26	12/29/26

This plan is provided for reference purposes only. A tailored plan will be delivered after selection and further scoping activities. This will be subject to sign-off and approval.

ORIGAMI RISK

Security at Origami

Product and Technology

2025

Downloaded at mc.os.lacounty.gov by email@organization.org

Downloaded by christopherson@origamirisk.com, 02 Oct 2025 13:52:15 GMT

A MESSAGE FROM OUR EXECUTIVES

As we move forward in our journey of growth and innovation, we want to emphasize our unwavering commitment to information security. The protection of our data, customer information, and intellectual property is not just a priority — it is a fundamental aspect of our operations and corporate integrity.

To this end, we are continuously investing in robust security measures, advanced technologies, and comprehensive training programs to safeguard our assets. Our security policies are designed to meet and exceed industry standards, ensuring that
we are always ahead of potential threats.

Moreover, our dedicated security team works tirelessly to monitor and respond to any incidents, so our systems remain secure and our operations uninterrupted. We are also committed to fostering a culture of security awareness among all employees, making sure that everyone understands their role in maintaining our defenses.

We design our Information Security Program to be compliant with laws, regulations and best practices while maintaining customer information as a top priority.

Thank you for your interest in the Information Security Program at Origami. The security booklet that follows provides an overview of our program. If you have any questions, do not hesitate to contact us or any member of the information security team.

Bob Petrie
Chief Executive Officer & Founder

Sarah Hendrickson
Chief Information Security Officer

ORIGAMI RISK

Why Origami?

Origami is an award-winning, market leading solution known for extremely high client and colleague satisfaction



Market Leading Solution

Origami Risk has been working in risk and safety for 10+ years. The only vendor with a single solution for EHS, RMIS, and GRC.



Comprehensive Tooling & Configurability

Comprehensive tooling and configurability on a unified platform to quickly get you up to speed.



True Partner

Our team is made up of an award-winning team of industry experts that designs client-centric solutions across all industries.



Product Investment

Single codebase with quarterly updates, 1000+ enhancements per year, and no legacy code.



Leading NPS

Highest NPS in the industry. Client retention of 98%.



Stand Out Culture

Voted best workplace with high Glassdoor reviews multiple years in a row: top talent is working with your team.

ORIGAMI RISK

Table of Contents

1. Origami Information Security (IS) Overview
2. Governance and Oversight
3. Risk Identification and Management
4. Protection Measures
5. Independent Third-Party Compliance & Certifications

Downloaded by [redacted] on [redacted]

ORIGAMI RISK

Origami Information Security (IS) Overview

Downloaded by [redacted] on [redacted]

ORIGAMI RISK

Our Information Security Team

The Information Security team consists of specialized areas focused on delivering a comprehensive security strategy

Our experts excel in...

- APPLICATION SECURITY
- NETWORK SECURITY
- THREAT DETECTION

Leveraging multiple disciplines, our team offers proactive information security protection by preventing, detecting, and responding to both internal and external threats to Origami.

Our wide range of responsibilities include:

- Security architecture
- Technology security assessments
- Application security
- Penetration testing
- Vulnerability management
- Security engineering
- Identity and access management

Downloaded at the request of Chairperson@origamirisk.com 02 Oct 2025 13:52:17 GMT

Downloaded at Thu, 11/19/2026 by macpro@origamirisk.com

Data Protection Program

Origami understands the critical need for robust privacy protections to oversee the collection, use, analysis, processing, and disclosure of confidential information, including personal data.

Our data protection program is…

- Fully aligned with commitments to clients and associates under all relevant data protection laws
- Implemented across all Origami entities with stringent technical, physical, and administrative security controls
- Mandated to adhere to data protection policies, procedures, and applicable legal requirements

ORIGAMI RISK

Third-Party Vendors

When we engage service providers or other third-party vendors to perform services on our behalf, we conduct thorough due diligence to ensure they have adequate privacy and security controls.

Contractual Requirements

- ✓ Implement proper technical, security, and privacy measures
- ✓ Use confidential information strictly for service purposes

Downloaded at Thu, 02 Oct 2025 13:52:17 GMT
Downloaded by cmacpherson@origamirisk.com

Security is More than Compliance

The landscape of cyber threats is advancing rapidly, and merely robust

compliance efforts may not suffice to stay ahead of these evolving dangers.

While it is crucial to adhere to laws and regulatory standards, we adopt a risk-centric, threat-informed strategy to effectively tailor our control solutions—ensuring we meet or exceed compliance requirements.

ORIGAMI RISK

Security Education, Training, and Awareness (SETA)

Origami recognizes the critical importance of fostering a robust security culture. We have developed a comprehensive and engaging **security training and awareness program** for all Origami associates and third-party contractors.

Onboarding

Initial Security Training

All new associates undergo comprehensive security training upon joining Origami.

Commitment Affirmation

Associates affirm their commitment to:

- Code of Conduct
- Information Security Policy
- Acceptable Use Policy

Continuous Training and Awareness

Ongoing Education

Continuous training and awareness activities throughout associates' tenure.

Awareness Initiatives

- Blend of communications and simulated attacks (e.g., phishing) to reinforce good practices
- Raise awareness of current attack techniques

Collaboration

Strong Partnerships

Collaboration with key business partners, including:

- Legal
- Compliance
- Risk
- Human Resources
- Technology teams

Downloaded by Mackenzie Anderson (mackenzie.anderson@origamirisk.com) on 02 Oct 2025 13:52:17 GMT

ORIGAMI RISK

External Stakeholders

Recognizing the importance of staying informed about general and industry-specific incidents and threats

Active Partnerships

Continuous collaboration with local law enforcement and government agencies, including:

- Federal Bureau of Investigations (FBI)
- Department of Homeland Security (DHS)
- Cybersecurity and Infrastructure Security Agency (CISA)

Benefits of Collaboration

Staying ahead of emerging threats

Receiving timely intelligence

Implementing proactive measures to safeguard operations and data

Ensuring security strategies are well-informed and responsive to the evolving threat landscape

02 Oct 2025 13:52:17 GMT
mcpherson@origamirisk.com

Downloaded at Thu, 13 Nov 2025 by emacpr

Employee Background Checks

Where permitted by local laws, including those related to employment and data protection, **Origami conducts thorough pre-employment background checks on all new colleagues.**



These checks may involve…

- ✓ Reference checks
- ✓ Verification of previous education and employment
- ✓ Criminal background assessments
- ✓ Credit references
- ✓ Additional security screenings

ORIGAMI RISK

Governance and Oversight

Downloaded by email@origamirisk.com at 11:18:03 EST 01/21/2026

ORIGAMI RISK

Origami's Governance Structure

Comprehensive and systematic governance and risk management process

Continuous risk oversight, management, and control

Focus on minimizing compliance, financial, operational, reputational,

and strategic risks

Balanced approach to managed risk in pursuit of mission and objectives

Downloaded by Risk Management Agency

Governance and Oversight

ORIGAMI RISK

Information Security Risk Management

Beyond enterprise-level risk management, the Information Security team operates a specialized Governance Risk & Compliance (GRC) program.

Program Responsibilities

- Identifying and assessing Origami's business risks and collaborates with internal stakeholders to determine the suitable risk treatment plan
- Provide regular updates on risk management activities to the Board of Directors and Executive Leadership

Downloaded at Thu, 02 Oct 2025 16:52:17 GMT by emacpherson@origamirisk.com

ORIGAMI RISK

Business Resiliency

Business resiliency ensures continuous operation and delivery of essential services during disruptions, adapting to natural disasters, cyber-attacks, and supply chain issues. This reliability fosters trust and confidence, assuring customers that their needs will be met regardless of unforeseen challenges.

RESILIENCY TOOLS

Business Continuity Planning (BCP)

Organized Business Continuity Management Program to prevent disruptions

- Business Impact Analysis (BIA) and risk assessment
- Development of continuity and disaster recovery strategies and plans
- Identification and training of recovery teams
- Validation exercises for plans and team capabilities

Disaster Recovery (DR)

Established disaster recovery plans to restore critical systems and applications

- Detailed Disaster Recovery Plans (DRP) with step-by-step actions
- Recovery time and recovery point objectives
- Thorough training for recovery teams on roles and responsibilities

Downloaded by cmacpherson@origamirisk.com, 02 Oct 2025 13:52:17 GMT

ORIGAMI RISK

Risk Identification and Management

Downloaded by [redacted] on 2026-01-16 at 15:52:21 GMT
Downloaded from origamirisk.com

Downloaded on Thu, 02 Oct 2025 13:52:17 GMT
Downloaded by cmacpherson@origamirisk.com

Risk Assessment

Origami's Risk Management program ensures comprehensive oversight and control through the following key components:

Greater Transparency and Insight

Importance of risk identification and control assessments

Provides transparency to the Board of Directors and Executive Leadership

Thorough Data Collection

Companywide policies mandate reporting and escalation of risk events

Thorough data collection process to identify risks

Comprehensive Approach

Covers all risk types, dynamic and forward-looking

Adapts to evolving risk profile and business environment

Leverages subject matter expertise to prioritize critical risks

Controlled Assessments

Led by the second line of defense

Reviews and challenges the control environment

Ensures alignment with Origami’s strategic business plan

Downloaded at Thu, 02 Oct 2025 21:27:10 GMT by cmacpherson@origamirisk.com

Asset Management

Origami keeps detailed records of hardware assets in managed inventories throughout their lifecycle, using these inventories to track each asset's attributes.

ORIGAMI RISK

Inventory Management

- Involves manual processes and controls.
- Includes the onboarding of assets and periodic reviews.
- Governed by established policies and standards.
- Assets are assigned to owners to aid in governance.

Note: Assets can include hardware, software, or virtual assets like virtual machines.

ORIGAMI RISK

Protection Measures

Downloaded by email@origamirisk.com at Thu, 03 Oct 2024 18:52:17 GMT

Downloaded at Thu, 02 Oct 2025 13:52:17 GMT
Downloaded by cmacpherson@origamirisk.com

Layered Protection

Origami employs multiple defense strategies in our approach to information security, ensuring that multiple layers of security controls and mechanisms are integrated throughout our IT ecosystem.

Our IT infrastructure services adhere to industry best practices, with controls, processes, and procedures in place to safeguard the availability, integrity, and confidentiality of Origami's infrastructure.

ORIGAMI RISK

ORIGAMI DEFENSE LAYERS

- **Identity & Access Management (IAM)**
- **Application and Software Security**
- **Infrastructure Security**
- **Encryption**
- **Data Loss Prevention**
- **Vulnerability Management**
- **Penetration Testing**
- **Physical Security**
- **Cloud Security**
- **Artificial Intelligence Security**
- **Vendor Security**
- **Event Monitoring and Logging**
- **Endpoint Security**

ORIGAMI DEFENSE LAYERS

Identity & Access Management (IAM)

Application and Software Security

Infrastructure Security

Encryption

Data Loss Protection

Vulnerability Management

Penetration Testing

Physical Security

Cloud Security

Artificial Intelligence Security

Vendor Security

Event Monitoring and Logging

Endpoint Security

ORIGAMI RISK

Identity & Access Management (IAM)

Top priority at Origami

Core Principles

Our controls are based on the general principles of no privilege without identity, no privilege without approval, and least privilege access is limited to the minimum entitlements necessary for authorized individuals to fulfill their roles.

Comprehensive Framework

Our IAM function operates within a comprehensive framework of policies and technology solutions that are fully integrated with relevant business processes.

This framework provides a centralized and consistent approach to ensure authorized individuals have the appropriate access to technology and data resources.

Downloaded on Thu, 02 Dec 2025 20:52:14 GMT
Downloaded by cmatherson@origamirisk.com

ORIGAMI DEFENSE LAYERS

- Identity & Access Management (IAM)
- **Application and Software Security**
- Infrastructure Security
- Encryption
- Data Loss Protection
- Vulnerability Management
- Penetration Testing
- Physical Security
- Cloud Security
- Artificial Intelligence Security
- Vendor Security
- Event Monitoring and Logging
- Endpoint Security

ORIGAMI RISK

Application and Software Security

Origami is committed to **protecting the integrity of all data** housed within its applications.

Validation

Application security is validated by running scanning tools and conducting manual penetration testing to identify and remediate application code vulnerabilities before applications are moved to production.

Review

Application security assessment reviews are a crucial part of our software development lifecycle. Each application goes through a security review and assessment process where evidence of compliance with security controls is validated and tested.

Assessment

Assessment results are used to improve the overall security posture of application and platform products.

Ongoing Monitoring

The security of the application environment is monitored by regular scans to identify needed operating system, middleware and application patches.

Downloaded on Thu, 02 Oct 2025 18:00:07 GMT
Downloaded by cmarkham@origamirisk.com

ORIGAMI DEFENSE LAYERS

Identity & Access Management (IAM)

Application and Software Security

Infrastructure Security

Encryption

Data Loss Protection

Vulnerability Management

Penetration Testing

Physical Security

Cloud Security

Artificial Intelligence Security

Vendor Security

Event Monitoring and Logging

Endpoint Security

ORIGAMI RISK

Infrastructure Security

Access to Origami networks is stringently controlled through multiple security layers.

Perimeter Firewalls

Perimeter firewalls are deployed at every ingress and egress point, with rules prohibiting external to internal access unless pre-approved by Origami Information Security.

Business-to-Business Communication

Business-to-business communication exceptions require appropriate authentication, encryption, and network protocol filtering based on no privilege without identity principles.

External User Access

External user access to Origami is managed via Virtual Private Network (VPN) and Transport Layer Security (TLS) for web portal access. VPN access mandates the use of passwords and second-factor authentication mechanisms.

Ongoing Monitoring

Origami utilizes native AWS continuous Distributed Denial of Service (DDoS) monitoring.

Downloaded on Thu, 02 Oct 2025 13:52:17 GMT
Downloaded by emcpherson@origamirisk.com

ORIGAMI DEFENSE LAYERS

Identity & Access Management (IAM)

Application and Software Security

Infrastructure Security

Data Protection

Data Loss Protection

Vulnerability Management

Penetration Testing

Physical Security

Cloud Security

Artificial Intelligence Security

Vendor Security

Event Monitoring and Logging

Endpoint Security

Downloaded by cmacpherson@origamirisk.com Downloaded at Thu, 02 Oct 2025 13:52:17 GMT

ORIGAMI RISK

Encryption

Origami protects the security of client data both at rest and in transit.

Data at Rest

- For **data at rest**, we use persistent encryption whenever possible.
- In our **cloud environments**, data at rest is secured using the native encryption services provided by the cloud vendor.
- For **highly sensitive data**, we may employ additional symmetric or asymmetric encryption on top of the native protocols.
- For **databases**, we utilize the persistent encryption options offered by the Database Management System (DBMS) vendor.

Data in Transit

Data in transit is encrypted throughout its lifecycle using protocols to protect it as it moves through applications.

- Transport Layer Security (TLS)
- Secure Shell (SSH

ORIGAMI DEFENSE LAYERS

- Identity & Access Management (IAM)
- Application and Software Security
- Infrastructure Security
- Encryption
- **Data Loss Protection**
- Vulnerability Management
- Penetration Testing
- Physical Security
- Cloud Security
- Artificial Intelligence Security
- Vendor Security
- Event Monitoring and Logging
- Endpoint Security

ORIGAMI RISK

Data Loss Protection

Origami combines content inspection and activity monitoring to identify and protect sensitive data.

Integrated Data Protection

Origami uses integrated protection for email and attachments, preventing accidental data exposure and third-party attacks.

Adaptive Approach

Origami employs a human-centric strategy for deep visibility into user behavior, enabling effective detection and prevention of data loss risks.

Downloaded on Thu, 02 Oct 2025 13:52:17 GMT
Downloaded by cmeechersen@origamirisk.com

ORIGAMI DEFENSE LAYERS

Identity & Access Management (IAM)

Application and Software Security

Infrastructure Security

Encryption

Data Loss Prevention

Vulnerability Management

Penetration Testing

Physical Security

Cloud Security

Artificial Intelligence Security

Vendor Security

Event Monitoring and Logging

Endpoint Security

Downloaded by Tina, Oct 2025 13:12:17 GMT
Downloaded by tmacphee@origamirisk.com

ORIGAMI RISK

Vulnerability Management

Origami employs a vulnerability management process that incorporates external vendor services, along with a suite of security scanning and penetration testing tools to identify, validate, and prioritize vulnerabilities.

Tracking and Ensuring Remediation	A dedicated security team is tasked with tracking and ensuring the remediation of vulnerabilities.
Identification and Logging	When a vulnerability that requires remediation is identified, it is logged and prioritized based on its severity, and an owner is designated.
Monitoring	The security team monitors these vulnerabilities until remediation is confirmed.
Patch Management	We follow a monthly patch management process, adjusting as necessary based on the criticality of the issue.
Remediation Execution	Vulnerability remediation is carried out directly by the relevant application and infrastructure teams, in line with policy and service level agreements.

ORIGAMI DEFENSE LAYERS

Identity & Access Management (IAM)
Application and Software Security
Infrastructure Security
Encryption
Data Loss Prevention
Vulnerability Management
Penetration Testing
Physical Security
Cloud Security
Artificial Intelligence Security
Vendor Security
Event Monitoring and Logging
Endpoint Security

ORIGAMI RISK

Penetration Testing

Origami employs rigorous penetration testing and continuous vulnerability assessments to stress test its robust security measures and protect against cyber threats.

Annual Penetration Testing

Origami uses independent auditors to perform annual penetration tests against our external facing servers, web application, mobile applications (Android & iOS), and APIs.

Industry-standard methodologies and advanced tools are used to simulate real-world attacks, focusing on authentication mechanisms, authorization controls, input validation, data integrity, and resilience against cyber threats.

Ongoing Vulnerability Assessments

In addition to independent, third-party audits, Origami conducts vulnerability assessments and monitoring on an ongoing basis to continually test and improve security measures.

Downloaded by mu, 02 Oct 2025 13:52:17 GMT
Downloading cmeagher@origamirisk.com

ORIGAMI DEFENSE LAYERS

Identity & Access Management (IAM)
Application and Software Security
Infrastructure Security
Encryption
Data Loss Prevention
Vulnerability Management
Penetration Testing
Physical Security
Cloud Security
Artificial Intelligence Security
Vendor Security
Event Monitoring and Logging
Endpoint Security

ORIGAMI RISK

Physical Security

Origami implements robust physical security measures for both office facilities and data centers, safeguarding personnel and infrastructure through comprehensive access controls and strategic partnerships.

Facility Access and Personnel Access Control

Origami uses leased office space with physical security and safety designs constructed to protect people and infrastructure in alignment with risk and in partnership with our real estate vendors.

Data Center Physical Security

Origami data centers are in AWS and leverage the AWS shared responsibility model and their data center controls.

Downloaded by Eva, 02 Oct 2025 13:52:17 GMT
Downloaded by cmeadersen@origamirisk.com

ORIGAMI DEFENSE LAYERS

Identity & Access Management (IAM)
Application and Software Security
Infrastructure Security
Encryption
Data Loss Prevention
Vulnerability Management
Penetration Testing
Physical Security
Cloud Security
Artificial Intelligence Security
Vendor Security
Event Monitoring and Logging
Endpoint Security

ORIGAMI RISK

Cloud Security

Origami enforces robust cloud controls, risk assessments, and vendor management to ensure secure cloud application deployment.

Comprehensive Cloud Controls

Origami has established comprehensive controls for cloud applications, including encryption,
strict authentication, role-based access, centralized logging, network segmentation, and auditing.

Continuous control monitoring and automated control enforcement gates are used to detect misconfigurations in cloud-based resources.

Risk Assessment and Architecture Review

Origami policy mandates that cloud-hosted applications undergo a formal risk assessment and architecture review on a risk-adjusted basis, utilizing a control inventory. New applications must complete a risk profile to determine regulatory and risk-based requirements.

Cloud Data Onboarding and Vendor Management

Origami has implemented procedures, review processes, and control gates for onboarding data
to cloud-hosted software platforms.

Cloud service providers must undergo an enhanced vendor management review.

Downloaded by eracarlson@origamirisk.com Thu, 02 Oct 2025 13:12:17 GMT
Downloaded by eracarlson@origamirisk.com

ORIGAMI DEFENSE LAYERS

Identity & Access Management (IAM)
Application and Software Security
Infrastructure Security
Encryption
Data Loss Prevention
Vulnerability Management
Penetration Testing
Physical Security
Cloud Security
Artificial Intelligence Security
Vendor Security
Event Monitoring and Logging
Endpoint Security

ORIGAMI RISK

Artificial Intelligence Security

Origami has adopted robust AI governance by evaluating AI technologies, implementing a comprehensive AI policy, and strictly controlling access to external LLMs.

Evaluating AI Technologies

Considering advancements in Generative Artificial Intelligence (GenAI) and Large Language Models (LLMs), Origami is diligently evaluating its approach to Artificial Intelligence (AI). This consideration extends to AI technologies developed or integrated by Origami, its third-party vendors, or counterparties within certain business processes, services, or products.

Comprehensive AI Policy

Origami has implemented a comprehensive Artificial Intelligence Policy to govern AI usage across all operations.

Controlled Access to LLMs

Access to external LLMs is stringently controlled and is not permitted from Origami systems or for business purposes without prior approval.

Downloaded on Thu, 02 Oct 2025 12:52:17 GMT
Downloaded by cmeacham@origamirisk.com

ORIGAMI DEFENSE LAYERS

Identity & Access Management (IAM)
Application and Software Security
Infrastructure Security
Data Protection
Data Loss Prevention
Vulnerability Management
Penetration Testing
Physical Security
Cloud Security
Artificial Intelligence Security
Vendor Security
Event Monitoring and Logging
Endpoint Security

ORIGAMI RISK

Vendor Security

Origami's vendor management integrates thorough risk assessments, continuous oversight, and strict contractual requirements to maintain robust security across partnerships.

Procurement and Vendor Management Policy and Program

Origami has a Procurement and Vendor Management Policy and Program that documents a risk-based framework for managing third-party vendor relationships consistent with regulatory guidance and policy.

Information Security Risk Management & Vendor Expectations

Information security risk management is built into Origami’s vendor management process, which covers:

- Vendor selection
- Onboarding
- Performance monitoring
- Risk management

Vendors are expected to design, implement, and maintain information security controls consistent with Origami’s security policies and standards.

Downloaded on Thu, 02 Oct 2025 13:52:17 GMT
Downloaded by cmagnuson@origamirisk.com

ORIGAMI DEFENSE LAYERS

Identity & Access Management (IAM)

Application and Software Security

Infrastructure Security

Data Protection

Data Loss Prevention

Vulnerability Management

Penetration Testing

Physical Security

Cloud Security

Artificial Intelligence Security

Vendor Security

Event Monitoring and Logging

Endpoint Security

ORIGAMI RISK

Vendor Security continued

Initial Assessment

Vendors that access our sensitive data are expected to undergo an initial assessment on a risk-adjusted basis. Assessments may include:

- Use of third-party market scoring products to review vendors' internet-facing security posture
- Determination of the maturity of the vendor's information security, cybersecurity, and business continuity practices

Ongoing Oversight

Changes in the service provided by a vendor are identified as part of a standard oversight process and may trigger an updated risk assessment prior to onboarding additional services.

Contractual Provisions

Origami policy requires vendors to agree to appropriate contractual provisions before receiving sensitive information. These provisions include specific information security control requirements, negotiated during onboarding or contract renewals.

Downloaded at Thu, 02 Oct 2025 13:52:12 GMT by emacpherson@origamirisk.com

ORIGAMI DEFENSE LAYERS

Identity & Access Management (IAM)

Application and Software Security

Infrastructure Security

Data Protection

Data Loss Prevention

Vulnerability Management

Penetration Testing

Physical Security

Cloud Security

Artificial Intelligence Security

Vendor Security

Event Monitoring and Logging

Endpoint Security

ORIGAMI RISK

Event Monitoring and Logging

Origami's event monitoring framework uses advanced SIEM, SOAR, threat intelligence, and behavior analytics for real-time threat detection.

SIEM and SOAR Systems

Origami employs a top-tier Security Information & Event Management (SIEM) system along with a Security Orchestration, Automation, and Response (SOAR) process and platform for event monitoring, log aggregation, and real-time response.

Expanded Log Sources

By expanding the range of log sources integrated with the SIEM solution, we enhance our ability to detect malicious activities within our technology environment.

Behavior Analytics and Insider Threat Detection

Additionally, behavior analytics and insider threat indicators bolster our capacity to identify anomalous behavior and protect against insider threats.

Enriched Threat Intelligence

Our SIEM data is further enriched by multiple external threat intelligence feeds and other data, providing additional indicators of compromise.

Downloaded by Thu, Oct 2025 13:52:47 GMT
Downloaded by emerson@origamirisk.com

ORIGAMI DEFENSE LAYERS

Identity & Access Management (IAM)

Application and Software Security

Infrastructure Security

Data Protection

Data Loss Prevention

Vulnerability Management

Penetration Testing

Physical Security

Cloud Security

Artificial Intelligence Security

Vendor Security

Event Monitoring and Logging

Endpoint Security

Downloaded by emeyerhoff@origamirisk.com from Origami Risk at Thu, 02 Oct 2025 13:52:17 GMT

ORIGAMI RISK

Endpoint Security

Origami uses a holistic approach to endpoint security to protect our data.

Endpoint Detection and Response (EDR)

All endpoints are protected with Endpoint Detection and Response (EDR) technology which employs heuristic, behavior-based capabilities in conjunction with traditional signature-based detection.

Application Whitelisting and Privileged Access Management

Application whitelisting and privileged access management is utilized to ensure the concept of least privilege is enforced, allowing any potential compromise to remain at the user level and prevent lateral movement.

Isolation of Compromised Endpoints

Our processes and technology enable us to quickly isolate an endpoint device in the event of a suspected compromise.

Traffic Inspection and Proxying

We inspect and proxy all endpoint traffic to identify and block suspicious activity.

ORIGAMI RISK

Incident Response & Recovery

Downloaded by emily.bonaventura@origamirisk.com at Thu Nov 13 2025 16:52:17 GMT

ORIGAMI RISK

Incident Response & Management

Origami employs a documented incident response and recovery program. In the event of a suspected or confirmed incident, the Information Security Team coordinates response activities with representatives from each IT discipline, as well as Physical Security, Legal, and Corporate Communications.

Incident Lifecycle Management

Our team uses a comprehensive suite of tools and best practices to manage incidents through Detection, Analysis, Containment, Eradication, and Recovery.

Security Partner Collaboration

We work with a dedicated security as a service partner to detect, investigate, and respond to threats, safeguarding the confidentiality, integrity, and availability of our information and technology environment.

Established Procedures and Protocols

We have procedures for identifying and responding to security incidents, collaborating with other departments to contain, mitigate, and remediate issues, and notifying clients, regulators, or other parties as needed.

24/7 365 Monitoring

Our Threat Management Center operates continuously with ongoing monitoring and response.

Downloaded by tina, 02 Oct 2025 18:52:17 GMT
Downloaded by cmacpherson@origamirisk.com

ORIGAMI RISK

Independent Third-Party Compliance & Certifications

Downloaded by [redacted] on [redacted]

Independent Third-Party Compliance & Certifications

ORIGAMI RISK

Maintaining a Secure and Reliable Operating Environment

Origami recognizes that the confidentiality, integrity, and availability of the information we handle are critical to both our current and prospective clients.

Our intellectual property and the software products we develop are vital to our company's future success and growth.

To ensure that Origami's products and services are reliable, safe, and of high quality…

Reliability and Safety

We regularly undergo multiple independent third-party audits and reviews

Audit Scope

Independent auditors examine our data centers, infrastructure, and operations

Verification Focus

Audits verify our security, privacy, and compliance controls

Ongoing Certification

Our dedication to a secure operating environment is evident through our ongoing certification program

Downloaded at the request of Connor Peterson (cpeterson@origamirisk.com) 02 Oct 2025 12:52:17 GMT

Downloaded at Thu, 02 Oct 2025 16:52:17 GMT
Downloaded by cmacpherson@origamirisk.com

ORIGAMI RISK

SSAE 18 SOC 1 Type II and SOC 2 Type II

Origami's compliance is assessed annually by a third-party auditing firm.

Beyond the annual audits, Origami continually performs...

- Internal control assessments
  to validate control effectiveness
- Regular user access reviews
  to ensure proper access controls
- Ongoing vendor risk assessments
  to monitor and manage third-party compliance

Downloaded at Thu, 02 Oct 2025 13:22:17 GMT
Downloaded by cmacpherson@origamirisk.com

ORIGAMI RISK

Payment Card Industry (PCI) Data Security Standard (DSS)

Cardholder Data Processing

Origami outsources all aspects of cardholder data processing to a PCI DSS compliant service provider.

Data Handling

Origami does not directly collect, store, process, or transmit cardholder data.

Downloaded at Thu, 02 Oct 2025 19:52:17 GMT
Downloaded by cmacpherson@origamirisk.com

ORIGAMI RISK

Health Insurance Portability & Accountability Act (HIPAA) Security Rule

Origami assess compliance with the HIPAA Security Rule by conducting a comprehensive annual risk analysis.

This thorough evaluation helps us identify and address potential security risks, thereby safeguarding
the confidentiality, integrity, and availability of sensitive health information.

Downloaded at Thu, 02 Oct 2025 18:52:17 GMT
Downloaded by cmacpherson@origamirisk.com

ORIGAMI RISK

ISO 27001: Information Security

Achieving ISO 27001 compliance is a significant milestone for any organization,
as it demonstrates a commitment to maintaining the highest standards of information security.

This internationally recognized certification provides a robust framework for managing and protecting sensitive data, mitigating risks, and ensuring business continuity.

Origami is in the process of obtaining our ISO 27001 certificate for our comprehensive Information Security Management System (ISMS).

Downloaded at Thu, 02 Oct 2025 13:02:11 GMT
Downloaded by cmacpherson@origamirisk.com

ORIGAMI RISK

Compliance with Privacy Laws

Origami is set up to comply with privacy laws that are applicable to its performance of its obligations to its customers.

GDPR is generally recognized as the gold standard for privacy compliance and as required by GDPR, Origami has appropriate organizational and technical measures to ensure the confidentiality, integrity, and availability of our customer's data.

Origami is certified under the EU-U.S. Data Privacy Framework which allows Origami to receive and process personal data from the EEA and can also enter into Data Processing Agreements as necessary for our customers to meet their obligations under privacy laws.



Downloaded by [redacted] on [redacted]

ATT 1 - Cost Form
Rev. 1

L1692.0-25 Rail Safety Cloud Incident Management System (RS-CIMS) RFP

		Year 1 - Implementation Plan			Yearly Licensing and Service After Implementation	
Description	**Estimated QTY**	**Unit Cost**	**Extended Total**	**Year**	**Monthly Cost**	**Extended Total**
Licensing and Service (12 months)	12		$107,850	YR 2		$107,850
Excel File Conversion ($ per GB processed)	10		$15,000	YR 3		$107,850
Photo File Conversion ($ per GB processed)	50		$15,000	Option - YR 4		$117,850
Training	1			Option - YR 5		$117,850
Professional Services	1		$10,000			
Custom Modules and Workflows	3		$33,400			
API Integrations and Customizations	6		$30,000			
Implementation Discount	1		($12,000)			
Annual Total			**$199,250**			

Annual Total Summary	
Total Year 1	$199,250
Total Year 2	$107,850
Total Year 3	$107,850
Total Year 4 - OPTION	$117,850
Total Year 5 - OPTION	$117,850
CONTRACT TOTAL	**$650,650**

Costs must be all-inclusive of requirements to perform all the work described in the scope of services. MTS will not pay additional costs.

Quantities displayed on the cost form are estimates for proposal purposes only. They represent what MTS anticipates, but are not guaranteed. The actual quantities may be more or less than anticipated, and are dictated by MTS's actual needs and available funding.

Proposer accepts responsibility for accuracy and presentation of the above numbers.

Proposers must complete the forms as provided. Failure to do so may deem the proposal non-responsive.

Metropolitan Transit System

DRAFT FOR EXECUTIVE COMMITTEE REVIEW DATE: 11/05/26

Agenda Item No. 07

MEETING OF THE SAN DIEGO METROPOLITAN TRANSIT SYSTEM
BOARD OF DIRECTORS

November 19, 2026

SUBJECT:

Mid-Coast Variable Message Sign (VMS) Installation Project – Design Services – Work Order Agreement

RECOMMENDATION:

That the San Diego Metropolitan Transit System (MTS) Board of Directors authorize the Chief Executive Officer (CEO) to execute Work Order No. WOA355-AE-78, under MTS Doc. No. PWL355.0-22 (in substantially the same format as Attachment A), with Psomas, in the amount of $236,669.82 to prepare Plans, Specifications, and Estimate (PS&E) for the Mid-Coast VMS Installation Project.

Budget Impact

The total cost of this work order is estimated to be $236,669.82. This project will be funded by MTS Capital Improvement Program (CIP) budget number 2007130101 - VMS Upgrade – Mid-Coast.

DISCUSSION:

VMS are installed at MTS Trolley and transit stations to provide information about next train arrival or other service-related notices. Because of varying factors such as space available and configuration of the platform and shelter areas, the method of installation is site specific: some VMS signs are mounted on station shelters and others are mounted on standalone poles.

The VMS signs installed with the Mid-Coast Project, manufactured by Nanov, have fared poorly since the 2021 system opening, are often inoperable and create frequent repair requests. These units have been in operation for 5 years, are at the end of their useful life, and are ready for replacement. On October 19, 2023 (Agenda Item (AI) 5), the Board approved a 5-year contract with Global Display Solutions (GDS) for VMS replacement units. This contract award followed a competitive process to identify a VMS product that can better operate in MTS's transit system.

The intent of this Work Order is for Psomas to review the proposed GDS units; perform an on-site review of the existing sign supports, power and network connections; and provide plans,

technical specifications, and estimates for the attachment and integration of GDS units to the existing sign supports and information network. Psomas will then prepare drawings and technical specifications for structural, power and network improvements needed at each location.

A&E Consultant Selection Process

On July 7, 2026, MTS prepared a sole source memo to justify the selection of Psomas to provide the design services for the Mid-Coast VMS replacement project. Through work orders approved by the Board on July 27, 2023 (AI 8) and July 17, 2025 (AI 12), Psomas previously completed the design to replace the VMS signs along the Blue, Green and Orange Line Trolley stations as well as the Bus Rapid Transit (BRT) and Superloop Bus Routes. The previous Psomas work included the same scope as this Mid-Coast effort, including infrastructure assessments and coordination with the sign vendor. Given the identical equipment and similar site conditions on the Blue, Green and Orange Line, retaining Psomas will prevent duplication of costs and reduce project startup time.

MTS staff recommend awarding a sole-source contract to Psomas based on prior successful performance under a related contract involving the VMS design for the MTS trolley system and BRT Stations. The previous scope of work included site-specific evaluations of structural support systems, custom mounting solutions, and assessments of existing power and data infrastructure to determine compatibility with GDS-manufactured VMS units. The Mid-Coast project will require a similar level of effort and technical understanding, particularly because the signs being installed are identical to those used in the Trolley system, and many of the same infrastructure considerations will apply.

Given this overlap in equipment, site conditions, and system configuration, a new competitive solicitation would result in a substantial duplication of effort, increased cost, and schedule delays. Bringing in a new consultant would require extensive onboarding and re-evaluation of design elements already vetted through the trolley/BRT VMS project. In contrast, Psomas can leverage its existing knowledge to immediately commence design activities, which is critical to maintaining project momentum and avoiding delays in permitting, procurement, and construction sequencing.

This approach aligns with Federal Transit Administration (FTA) Circular 4220.1F, Chapter VI, Section 3.i.(1)(b)(1)(c), which allows non-competitive procurement under the “sole source” designation when it involves a follow-on contract for highly specialized equipment or services, where the award to a different contractor would result in substantial unrecoverable costs.

Following negotiations with MTS, Psomas’s proposed amount was reduced from its original estimate of $267,057.78 to a final negotiated amount of $236,669.82.

For this project, Psomas will utilize the following subcontractors:

Subcontractor Firm Name	Firm Classification	Dollar Value of Subcontract
Hatch Associates Consultants, Inc.	None	$169,776.90
Total Subcontracted Amount		**$169,776.90**

Therefore, staff recommends that the MTS Board of Directors authorize the CEO to execute Work Order No. WOA355-AE-78, under MTS Doc. No. PWL355.0-22 (in substantially the same format as Attachment A), with Psomas, in the amount of $236,669.82 to PS&E for the Mid-Coast VMS Installation Project.

/s/ Sharon Cooney
Sharon Cooney
Chief Executive Officer

Key Staff Contact: Julia Tuer, 619.557.4515, Julia.Tuer@sdmts.com

Attachment: A. Draft Work Order WOA355-AE-78

Metropolitan Transit System

October 21, 2026

MTS Doc. No. PWL355.0-22
Work Order No. WOA355-AE-78

Mrs. Sarah Curran, PE
Vice President
Psomas
401 B Street, Suite 1600
San Diego, CA 92101

Dear Mrs. Curran:

Subject: WORK ORDER WOA355-AE-78 TO MTS DOC. NO. PWL355.0-22, DESIGN SERVICES FOR THE MIDCOAST VARIABLE MESSAGE SIGN (VMS) PROJECT

This letter shall serve as our agreement for Work Order WOA355-AE-78 to MTS Doc. No. PWL355.0-22, for professional services under the General Engineering Consultant Agreement, as further described below.

SCOPE OF SERVICES

This Work Order shall provide design services for Midcoast VMS Design project. Services shall be performed in accordance with the attached Scope of Services (Attachment A).

SCHEDULE

The Schedule shall be for a period of six (6) months from the date of the Notice to Proceed.

PAYMENT

Payment shall be based on actual costs in the amount of $236,669.82 (Attachment B). The Work Order amount shall not be exceeded, without prior authorization of MTS.

Please sign below, and return the document to the Contracts Specialist at MTS. All other terms and conditions shall remain the same and in effect.

Sincerely,

Sharon Cooney
Chief Executive Officer

Accepted:

Sarah Curran, Vice President
Psomas

Date:

Attachments: A, Scope of Services
B, Negotiated Fee Proposal

ATTACHMENT A
SCOPE OF SERVICES

TITLE: MIDCOAST VARIABLE MESSAGE SIGNS (VMS) DESIGN **WOA#** WOA355-AE-78

I. PROJECT DESCRIPTION

Replacing the outdated VMS (Variable Message Signs) is a key initiative designed to improve the quality of real-time customer communication for patrons utilizing the trolley. The new, state-of-the-art signs from Global Display Solutions (GDS), offer greater reliability and efficiency and are being installed on the trolley system, ensuring uniformity across both networks. The same sign across all networks simplifies maintenance and repairs in case of damage and improves the travel experience for riders. The Consultant team shall develop detailed drawings and technical specifications for the structural, power, and network upgrades required along each route to support the new signs.

The project scope shall include replacement of all forty-nine (49) double-sided VMS signs, representing ninety-eight (98) total display panels as shown in Table I.

Table I: Stations/Signs Per Station

Station	Double-Sided VMS Sign Count
Balboa Avenue Station	6
Old Town Station	3
Clairemont Drive Station	4
Executive Drive Station	4
Nobel Drive Station	4
Tecolote Road Station	7
UCSD Central Campus Station	5
UCSD Health La Jolla Station	7
UTC Station	5
VA Medical Center Station	4
Total	**49**

II. SCOPE OF WORK

The scope of work shall consist of the tasks and deliverables described below. The goal of the project is to review the proposed GDS units; perform on-site structural review of the existing sign supports, existing power and network connections; and provide plans, technical specifications, and estimates to install the GDS units into the existing sign supports and connect to the existing information network.

Task 1 - Project Management and Coordination:

Under this task the Consultant shall provide the following services:

1.1 Provide project management services including the requirements for invoicing, scheduling, monthly project progress reports, and administration of the Consultant's team.

1.2 Provide project coordination with MTS and other project stakeholders, as identified by MTS.

1.3 QA/QC shall be performed, prior to submittal, on all deliverables to ensure quality of work and compliance with the scope of work. All reviewed documents will have a check box or signature page indicating review has been performed.

Task 2 – Site Reconnaissance and Summary:

2.1 Structural Review:

a. Consultant shall perform a visual and hands-on structural assessment of each sign support to verify they match the as-built plans, have not been modified, and are in sufficient condition to accept the new GDS signs.
b. Consultant shall review the as-built plans of the sign supports for each line, review the new GDS sign specifications for weight and size, analyze the existing supports for structural adequacy with the new sign weights, wind, and seismic loading, and design adapting brackets to attach new GDS signs to each pole type.
c. Consultant shall provide a technical memo describing the sign support conditions and preliminary attachment detail.

2.2 Data/Electrical Review:

a. Consultant shall conduct site surveys of each of the 10 stations to gather information about the existing power circuits, media converters, and network cabling and connectivity to the local station network for backhaul to central control. Consultant shall produce a site survey report with pictures and descriptions of the existing power and network connections to each existing VMS at each station.
b. To conduct the site survey, Consultant shall ask an MTS representative to provide access to the signs, handholes, cabinets, network switches, and media converters at each station. Where necessary, the MTS will need to furnish a ladder to access some of the equipment.

2.3 Consultant shall compile the Structural Review Technical Memo and Data/Electrical Review Survey Report and submit to MTS.

Task 3 – Plans, Specifications and Estimates:

3.1 Preliminary Design:

Consultant will prepare plans, technical specifications, and estimates to include the following:

3.1.A Structural Drawings:

The plan set for each line is expected to include the following:

i. Cover sheet
ii. Notes, Index, Standards
iii. Route Map/Site Plan/Table of Support Types
iv. Support Types
v. Structural Connection Details

3.1.B Data/Electrical Drawings:

Consultant shall similarly prepare an engineering package for the Mid Coast Lines consisting of typical drawings and specifications for installing and connecting the new signs to the power and network connections at sign installation. Signs with similar power and network connections will reference typical drawings and specifications.

3.2 Final Design:

a. Consultant shall create technical project special provisions based on a template file provided by MTS.
b. The packages shall also include the requirements for pre and post installation testing to verify the proper installation, functionality, and network connectivity of each sign.
c. The specifications shall include staging of the installations, structural connection, and painting
d. Consultant shall submit the 30%, 60%, and 90% design sets to MTS for review and feedback before submitting the final 100% set.

III. PERIOD OF PERFORMANCE

The period of performance for required services shall be 6 Months from the date of the Notice To Proceed.

IV. DELIVERABLES

1. Field memo
2. Plans (Preliminary and Final)
3. Specifications (Preliminary and Final)
4. Cost Estimates (Preliminary and Final)
5. Structural Calculations
6. QA/QC Documentation

V. SCHEDULE OF SERVICES/MILESTONES/DELIVERABLES:

A. Tasks Schedule

Task	Begin/End Dates
1.Project Management and Coordination	NTP - Completion
2.1 All Mid Coast Stations Site Recon	NTP + 2 months
2.2 Field Memo	NTP + 3 months
3.1 Preliminary Design	NTP + 4 months
3.2 Final Design	NTP + 6 months

B. Milestones/Deliverables Schedule:

Milestone/Deliverable	
All Mid Coast Stations Site Recon	NTP + 2 months
Field Memo	NTP + 3 months
Preliminary Design	NTP + 4 months

Final Design	NTP + 6 months

VI. MATERIALS TO BE PROVIDED BY MTS AND/OR OTHER AGENCY:

1. 2020.03.23_Final VMS Detail-Update (Exhibit A)
2. MCCTP - Submittal Cover Sheet 3855.0 (Exhibit B)
3. MidCoast VMS Plan with Red Lines for Clearances and Vertical Placement - 2020.03.21 (Exhibit C)
4. Shop_Drawing_NBSDM-460LC-125-SAN_(09-09-2020) (Exhibit D)
5. 01_G4200075_v4 - 42 in Stretch Display (Exhibit E)
6. 03_SF082_42_SS_P00 - Sheet1 (Exhibit F)
7. 04_SF082_42_DS_P00 - Sheet1 (Exhibit G)
8. 06_42" Stretch LCD Example Install Manual MAN10884_R01 - Install guide 42 MIDAS-S (Exhibit H)
9. MTS representative participation in field reconnaissance along with the necessary equipment to access signs and cabinets.
10. Table of all IP addresses to be configured for the new signs.

VII. SPECIAL CONDITIONS

Not Applicable.

VIII. MTS ACCEPTANCE OF SERVICES:

Consultant shall not be compensated at any time for unauthorized work outside of this Work Order. Consultant shall provide notice to MTS' Project Manager upon 100% completion of this Work Order. Within five (5) business days from receipt of notice of Work Order completion, MTS' Project Manager shall review, for acceptance, the 100% completion notice. If Consultant provides final service(s) or final work product(s) which are found to be unacceptable due to Consultants and/or Consultants subcontractors negligence and thus not 100% complete by MTS' Project Manager, Consultant shall be required to make revisions to said service(s) and/or work product(s) within the Not to Exceed (NTE) Budget. MTS reserves the right to withhold payment associated with this Work Order until the Project Manager provides written acceptance for the 100% final completion notice. Moreover, 100% acceptance and final completion will be based on resolution of comments received to the draft documents and delivery of final documentation which shall incorporate all MTS revisions and comments.

Monthly progress payments shall be based on hours performed for each person/classification identified in the attached Fee Schedule and shall at no time exceed the NTE. Consultant shall only be compensated for actual performance of services and at no time shall be compensated for services for which MTS does not have an accepted deliverable or written proof and MTS acceptance of services performed.

IX. DEFICIENT WORK PRODUCT

Throughout the construction management and/or implementation phases associated with the services rendered by the Consultant, if MTS finds any work product provided by Consultant to be deficient and the deficiency delays any portion of the project, Consultant shall bear the full burden of their deficient work and shall be responsible for taking all corrective actions to remedy their deficient work product including but not limited to the following:

- Revising provided documents

At no time will MTS be required to correct any portion of the Consultants deficient work product and shall bear no costs or burden associated with Consultants' deficient performance and/or work product.

X. DELIVERABLE REQUIREMENTS

Consultant will be required to submit any and all documentation required by the Scope of Work. The deliverables furnished shall be of a quality acceptable to MTS. The criteria for acceptance shall be a product of neat appearance, well-organized, and procedurally, technically and grammatically correct. MTS reserves the right to request a change in the format if it doesn't satisfy MTS's needs. All work products will become the property of MTS. MTS reserves the right to disclose any reports or material provided by the Consultant to any third party.

Consultant shall provide with each task, a work plan showing the deliverables schedule as well as other relevant date needed for Consultant's work control, when and as requested by MTS.

Consultant's computer data processing and work processing capabilities and data storage should be compatible with Windows compatible PC's, text files readable in Microsoft Word, and standard and customary electronic storage. Consultant shall maintain backup copies of all data conveyed to MTS.

Consultant shall provide MTS with hard copy or electronic versions of reports and/or other material as requested by MTS.

XI. PRICING

Except where otherwise noted herein, pricing shall be firm and fixed for the duration of the Work Order and any subsequent Change Orders/Amendments to the Work Order. There shall be no escalation of rates or fees allowed.

XII. ADDITIONAL INFORMATION

List additional information as applicable to the specific Work Order scope of services.

XIII. PREVAILING WAGE

Prevailing wage rates apply to certain personnel for these services? ☐ Yes ■ No

Exhibits: A, 2020.03.23_Final VMS Detail-Update
B, MCCTP - Submittal Cover Sheet 3855.0
C, MidCoast VMS Plan with Red Lines for Clearances and Vertical Placement - 2020.03.21
D, Shop_Drawing_NBSDM-460LC-125-SAN_(09-09-2020)
E, 01_G4200075_v4 - 42 in Stretch Display
F, 03_SF082_42_SS_P00 - Sheet1
G, 04_SF082_42_DS_P00 - Sheet1
H, 06_42" STRETCH LCD EXAMPLE INSTALL MANUAL MAN10884_R01 - INSTALL GUIDE 42 MIDAS-S

EXHIBIT A
2020.03.23_Final VMS Detail-Update

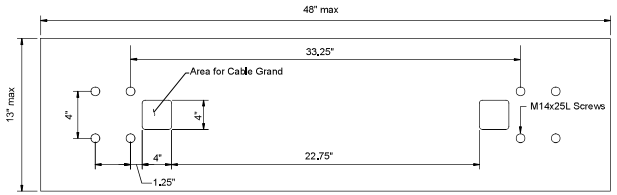

DISPLAY ENCLOSURE
TOP PANEL DETAIL (TOP VIEW)
N.T.S.

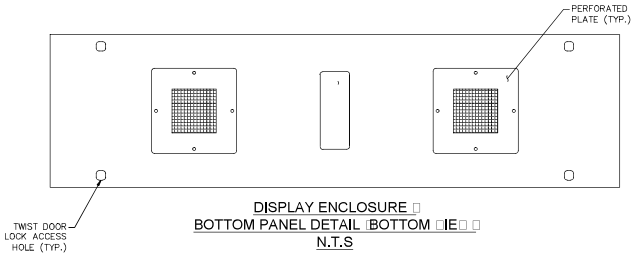

DISPLAY ENCLOSURE
BOTTOM PANEL DETAIL (BOTTOM VIEW)
N.T.S

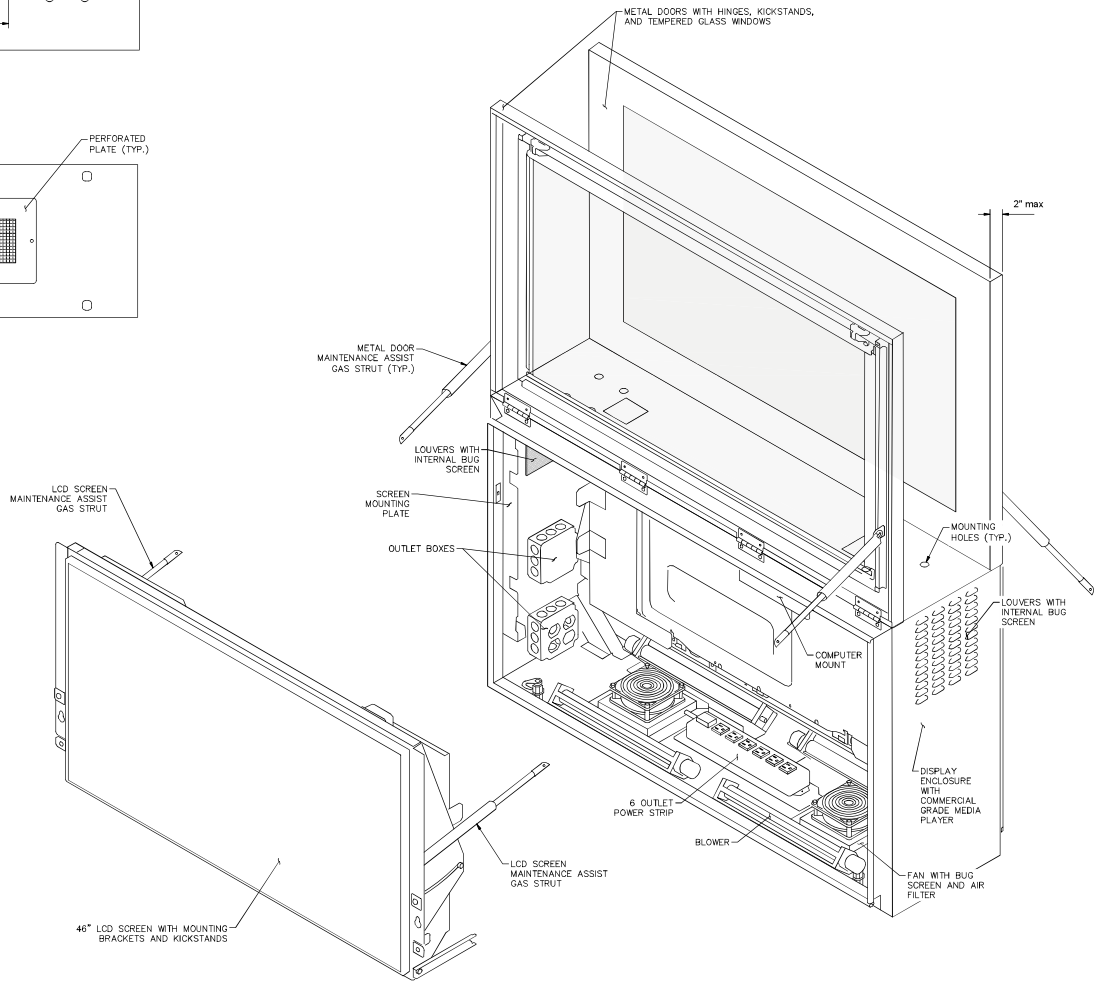

NOTES

1. DISPLAY ENCLOSURE FABRICATOR SHALL ENSURE ADEQUATE REINFORCEMENT TO SUPPORT ENCLOSURE CONTENTS AND SUSPENSION FROM VMS SIGN FRAME.
2. COMPUTER SHALL BE POSITIONED SUCH THAT THE POWER BUTTON IS READILY ACCESSIBLE TO MAINTENANCE PERSONNEL WORKING WITHIN THE ENCLOSURE.
3. ALL WIRING SHALL BE LABELED AND COLOR CODED AS TO ITS USE. THE MANUFACTURER SHALL INCLUDE AN IDENTIFICATION KEY AFFIXED WITHIN THE DISPLAY ENCLOSURE.
4. ALL HARDWARE TO BE MANIPULATED DURING REGULAR MAINTENANCE (I.E. ANGLE BRACKET HARDWARE) SHALL BE CAPTIVE HARDWARE AND CAPABLE OF MANIPULATION WITHOUT THE ASSISTANCE OF ADDITIONAL POWER TOOLS.

NO.	DATE	REVISIONS	BY	CHK	APRV

Kimley»Horn
401 B Street, Suite 600, San Diego, California 92101
Phone: 619.234.9411 / www.kimley-horn.com

RELATIVE BORDER SCALE IS IN INCHES 0 1 2

DESIGNED BY		DATE
DRAWN BY		
CHECKED BY		
SANDAG PRJ ENG		

Metropolitan Transit System

MTS VMS PROCUREMENT

VARIABLE MESSAGE SIGN DISPLAY ASSEMBLY DETAIL

SCALE	NOT TO SCALE
CONTRACT NO.	CIP XXXXXXX
DRAWING NO.	SHEET NO.

7

MTS DOC NO. WOA355-AE-7B

EXHIBIT B
MCCTP - Submittal Cover Sheet 3855.0

MCTC
Mid-Coast Transit Constructors
Stacy and Witbeck · Herzog · Skanska

Mid-Coast Corridor Transit Project (MCCTP) **1/6/2020**

Submittal Cover Sheet

Submittal Number: 3855.0

Description: Stations (VMS) Shop Drawings

Supplemental Information: In the sections below, list pertinent RFI's and Submittals that effect this Submittal and will clarify the author's intent.

RFI Number	Description and Relevance	Relevance
RFI No. 801.2		
Question: RFI 00801.2 MCTC was provided product data for the proposed message board prototype and proposed CCTV cameras (see attached). Both proposed products would replace its predecessors found on other MTS LRT and BRT Stations. MCTC has facilitated ongoing coordination between their structural steel subcontractor responsible for fabricating the structure and with SANDAG CMC. After reviewing the product data provided by SANDAG CMC, MCTC and SANDAG CMC review the proposed attachment details on 4/30/19 needed to allow for successful installation of the communication and surveillance devices at a later date (by others). Please see the attached exhibits for proposed modifications and attachment details. Further review and clarifications are required by the structural engineer and SANDAG/MTS for the following items: Type 1-3: see proposed attachment details male-female tube steel extension for camera mounting and similar mounting detail for message board support. SANDAG to provide info for: 1. Confirm HSS5x5 provides sufficient surface area to mount camera back box. 2. Confirm proposed flange plate at end of vertical HSS5x5 support is sufficient to support message board such that horizontal support can be eliminated. Advise on required dimension a.f.f. of bottom flange plate in order	Answer: [6/25/2019 Simon Wong Engineering - Vinay Reddy] In addition to the comments posted on 6/19/19, see attached email thread which seeks to clarify the horizontal distance between flange plate openings. [6/25/2019 Simon Wong Engineering - Vinay Reddy] Original response did not properly clarify the horizontal distance between flange plate openings. Additional attachment including email correspondence was provided for clarity. [6/25/2019 CPM Partners - Ylonda Miles] Reopened for additional comments. [6/20/2019 AECOM - Dave Vornberger] RFI 801 Rev 2 (801.2) Reviewed by CM / EOR and concurred by the REs. See 6/19/19 Response below / attached. [6/20/2019 CA Dept. of Transportation - Dan Velazquez] Concur, Segments 3&4 RE [6/20/2019 Jacobs - Ben Quintana] Concur, Segments 1&2 RE [6/19/2019 Simon Wong Engineering - Vinay Reddy]	[sb] provides VMS and CCTV info for coordination and layout purposes

to account for VMS sign clearance based on prospective message board model. Provide bolt array for plate for message sign mounting. 3. Confirm handhole can be relocated to 2'-3 ¾" (1' higher than current) a.f.f. and second handhole just above can be eliminated. This will create more space to bend conduit stub ups to the appropriate location. 4. Welds are assumed to be ¼" width unless otherwise noted. Confirm structurally stable. 5. Confirm 5/8" diameter ASTM F1554 GR55 is adequate for male-female tube steel connection is adequate. Type 4: see proposed attachment details male-female tube steel extension for camera mounting and similar mounting detail for message board support. SANDAG to provide info for: 1. Confirm HSS5x5 provides sufficient surface area to mount camera back box. 2. Confirm proposed flange plate at end of vertical HSS5x5 support is sufficient to support message board such that horizontal support can be eliminated. Advise on required dimension a.f.f. of bottom flange plate in order to account for VMS sign clearance based on prospective message board model. Provide bolt array for plate for message sign mounting. 3. Confirm handhole can be relocated to 2'-3 ¾" a.f.f. This will create more space to adjust stub ups to the appropriate location. 4. Welds are assumed to be ¼" width unless otherwise noted. Confirm structurally stable. 5. Advise minimum weld length of HSS4x4 within built up angles such that tube steel "embedment" can be reduced to allow for wire pulling. Tube steel is currently too high and will not allow for wire pulling. 6. Confirm 5/8" diameter ASTM F1554 GR55 is adequate for male-female tube steel connection is adequate. 7. Stiffeners along cantilever needs to be rotated to allow for clear conduit path. Advise what other longitudinal supports are needed (refer to similar discussion to alternate column stiffening option).	This response was discussed with and concurred by the CM team and Engineer of Record Please see attached redlined exhibits. Responses provided in BLUE by the Engineer. This information may be used to develop shop drawings for the Type 1-3 and Type 4 VMS structures. [3/25/2019 Mid-Coast Transit Constructors - Debbie Hidalgo] Comments dated prior to 3/25/2019 refer to the original or previous revision(s) of this RFI. [11/12/2017 AECOM - Dave Vornberger] RFI 801 was reviewed by the CM team and the 11/2/17 response below is concurred by the RE's listed below. See also the attached mark-up sheets file. Note: Z. Rizk was replaced in the workflow by DJ Thakare for ELMODT. [11/6/2017 Jacobs - Dhananjay Thakare] Concur. RE - SDRBDT & EMDT [11/6/2017 Jacobs - Ben Quintana] Concur, Segments 1&2 RE [11/6/2017 CA Dept. of Transportation - Dan Velazquez] Concur, Segments 3&4 RE [11/2/2017 PGH Wong - Timothy Poppe] Clearance between station platforms and bottom of VMS support fixture shall be maintained at 12' +/- 1.0". The length of the HSS support fixture shall be 48.5". These dimensions shall control over those provided for canopy structural members. See attached mark-up of shts 2955 & 3406 for clarification.	

Please advise. RFI 00801.1 Please provide the product data for variable message signs and CCTV cameras to be installed by others. The information will be used to coordinate shop drawing details for VMS structures. RFI 00801 Section 127 01 01-2.01, "Owner-Furnished," of the Special Provisions, note C states "variable message signs will be provided by SANDAG and mounted to sign frames furnished and installed by the Contractor." Please provide the dimensions of the variable message signs. Info is needed to ensure head clearance requirement is met in shop drawing process.		
863 - Station Canopy (UCSD) Base Plate Detail		
Question: (Ref. SANDAG response to Submittal No. 1557) See attached RFI regarding base plate opening for UCSD station shelters and VMS structures. The larger opening is needed to accept electrical and communications conduits. LBI is also requesting clarification regarding found inconsistencies in the dimensions provided in the contract drawings.	Answer: [10/27/2017 PGH Wong - Rafael Lopez] See the attached comments	[sb] changes two (2) discrete holes for conduit stub ups into larger slotted hole for constructability.
1014 - Stations UCSD VMS-Shelter Enclosued Column Alternative		
Question: The canopy design has built-up members without a front or back plate to enclose the columns. This would mean the electrical and communications raceways would be visible and rigid conduit would be required. The openings in the base plate and stiffener details in the station structures drawings did not provide the appropriate size to accept rigid conduits. One of the proposals presented by MCTC (and their subcontractors) to eliminate the requirement of rigid conduits was to enclose the columns.	Answer: [1/18/2018 PGH Wong - Timothy Poppe] All Canopy and VMS support columns are to be enclosed. Type 4 columns (UCSD Stations) are to be enclosed as shown on attached ZGF Sketches ASK 001, 002, & 003. RFI 863 and 863.1 address baseplate configurations. Enclosed conduit runs need not be metallic or galvanized/painted.	[sb] provide sheet metal cover to enclose columns.

MCTC
Mid-Coast Transit Constructors
Stacy and Witbeck · Herzog · Skanska

Mid-Coast Corridor Transit Project (MCCTP) **1/6/2020**

Per SANDAG's request, see attached shop drawing of enclosed VMS and shelter columns alternative. The concept was reviewed by representatives from SANDAG's design and construction management team (Jack Boda, Darryl Carty, Duff Joseph, Chuck Wehsener). Please advise.		

Submittal Number (Series)	**Description and Relevance**

Responsible Engineer: Steven C. Banh, PE _____

(name) (signature)

PARAMOUNT METAL & SUPPLY CO.

STRUCTURAL & ARCHITECTURAL METALS
STAINLESS STEEL & ALUMINUM METAL FABRICATION

LETTER OF TRANSMITTAL

TO: MCTC MID COAST TRANSIT CONSTRUCTORS

ATTN: Steven C. Banh
(949) 283-2255

DATE: 01/03/2020
FROM: DON LEUNG
PROJECT: MCTC - VMS COLUMNS
TYPE 1, 2, 3 & 4

WE ARE SENDING:

- [X] Attached
- [ ] Under separate cover via_____

- [ ] Shop Drawings
- [ ] Copy of Letter
- [ ] Prints
- [X] Submittal
- [ ] Change Order
- [ ] Plans
- [ ] Samples
- [ ] RFC
- [ ] Specifications
- [ ] Updates
- [ ] RFI
- [ ] Response to RFQ

ITEM NO.	DATE	COPIES	DESCRIPTION
1	01/03/20	1	SUBMITTAL VMS COLUMNS - TYPE 1, 2, 3 & 4
			(AERIAL/ON-GRADE/UCSD/NON-UCSD)
			(OFF-PLATFORM INCLUDED)

THESE ARE TRANSMITTED as checked below:

- [X] For Approval
- [ ] For Your Use
- [ ] As Requested
- [ ] For Review and Comment
- [ ] Accepted
- [ ] Accepted as Noted
- [ ] Revise and Resubmit
- [ ] Not Accepted
- [ ] For Your Files

8140 EAST ROSECRANS AVENUE·PARAMOUNT,CA 90723-2794·(562)634-8180·(213)636-9478·FAX(562)634-1350

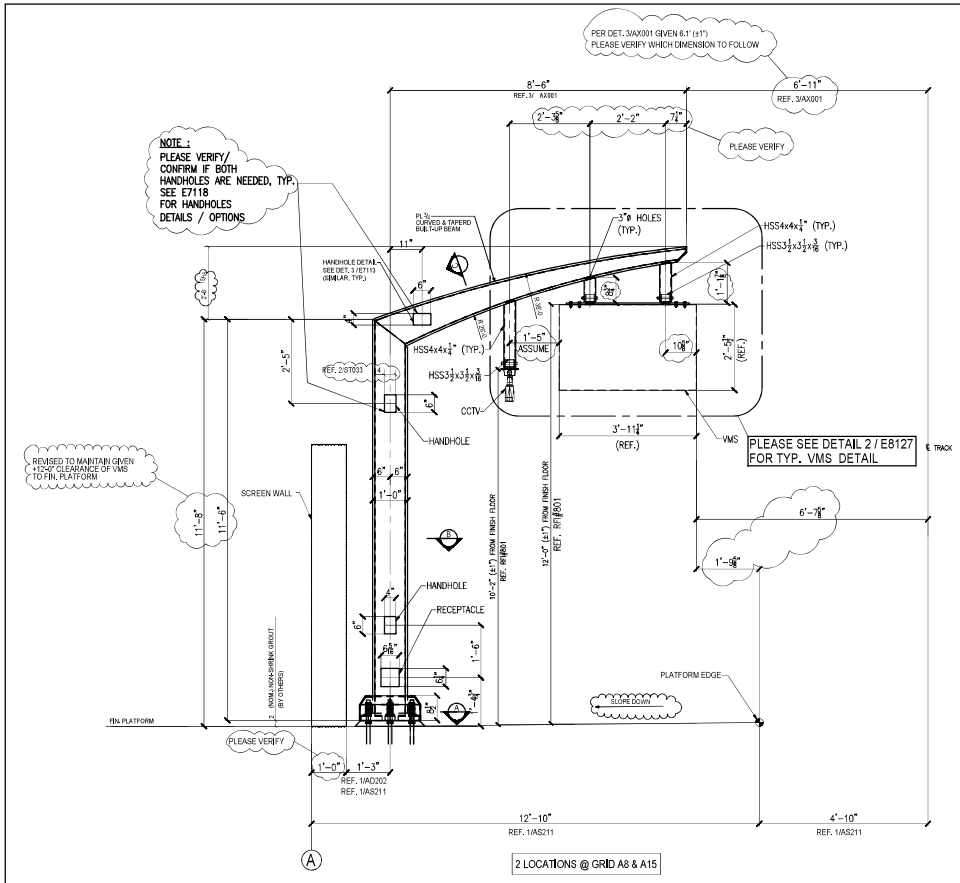

VMS COLUMN CLAIREMONT SOUTHBOUND 1 / E8120

(NON-UCSD STATION)
(ON-GRADE STATION)
REF. 1/AS211

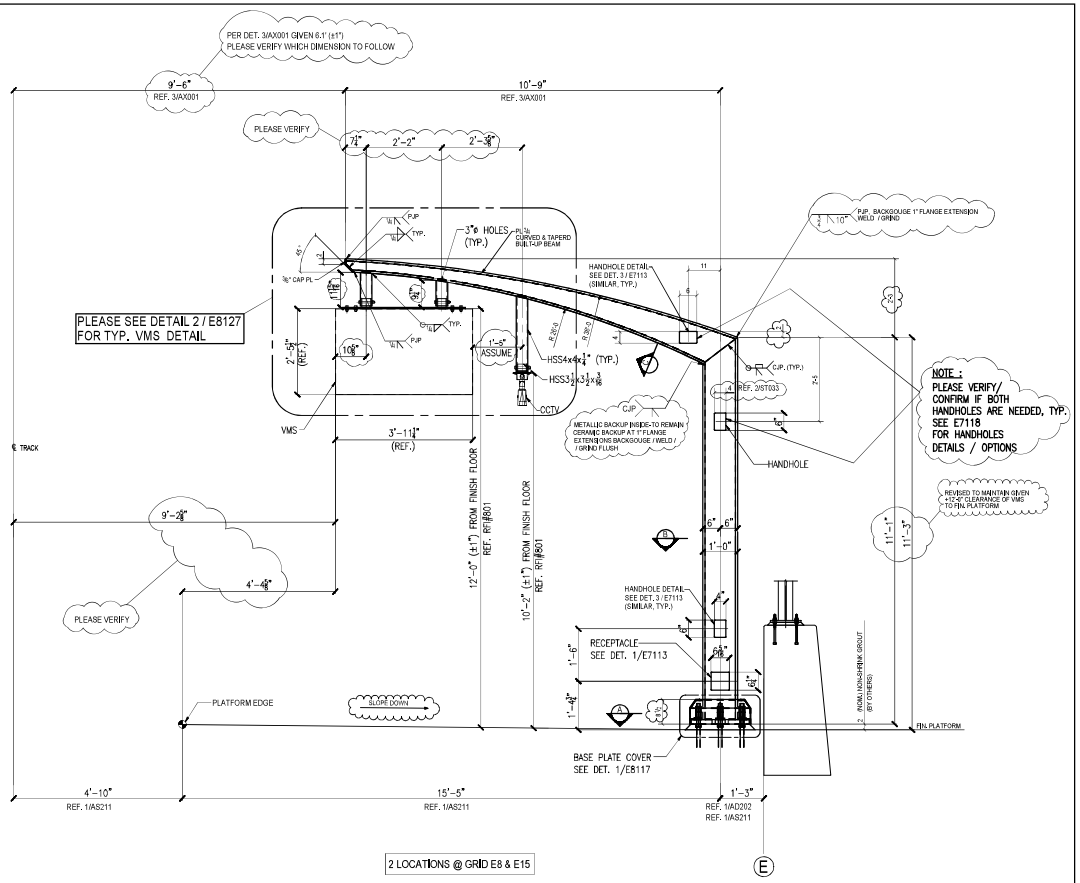

VMS COLUMN CLAIREMONT NORTHBOUND 2 / E8120

(NON-UCSD STATION)
(ON-GRADE STATION)
REF. 1/AS211

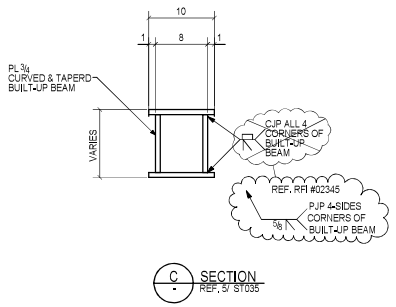

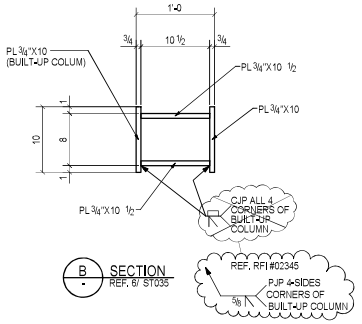

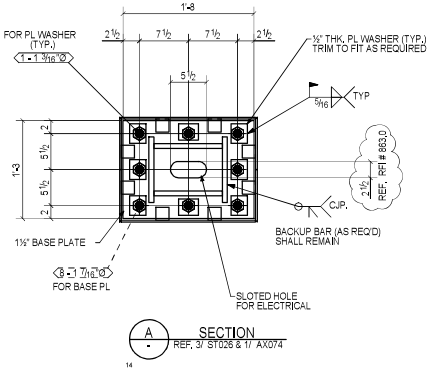

FIELD BOLTS:			
PAINT:			
HOLES:			
ELECTRODES:	0	01/03/2020	For Approval
BOLTS: U.N.O.	REV	DATE	DESCRIPTION

PARAMOUNT METAL & SUPPLY Co.
8140 E. ROSECRANS AVE., PARAMOUNT, CA 90723
TEL. (562) 634-8180
FAX (562) 634-1350

PROJECT **MID-COAST CORRIDOR TRANSIT PROJECT**

DATE: 12/13/2019
DRAWN: AP
CHECKED: DL
DRAWING No.: E8120
JOBS No.: 471 M

CONTRACTOR MID-COAST TRANSIT CONSTRUCTORS

TITLE VMS COLUMN - CLAIREMONT STATION (NON-UCSD)

C:\TEM\VMS\FOR APPROVAL\E8120.dwg, 1/3/2020 4:03:21 PM, DWG To PDF.pc3

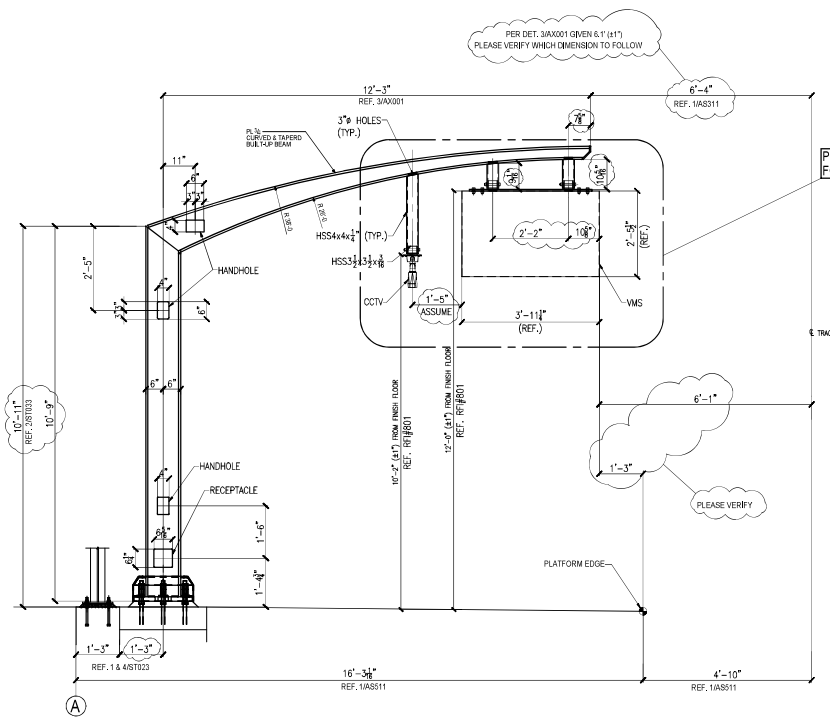

2 LOCATIONS @ GRID A8 & A15

VMS COLUMN VA SOUTHBOUND 1 E8121

(NON-UCSD STATION)
(ON-GRADE STATION)
REF. 1/AS511

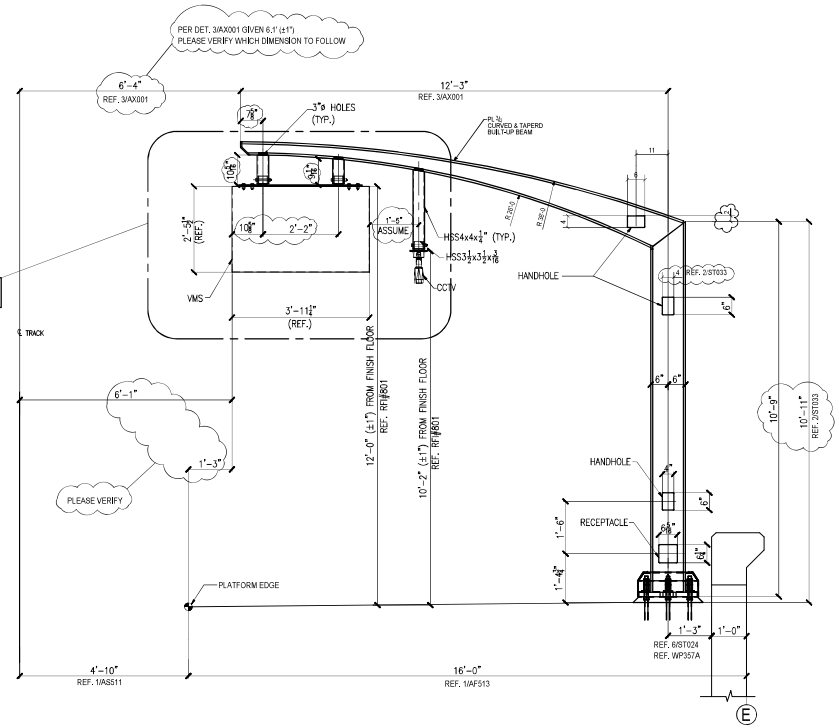

2 LOCATIONS @ GRID E8 & E15

VMS COLUMN VA NORTHBOUND 2 E8121

(NON-UCSD STATION)
(ON-GRADE STATION)
REF. 1/AS511

PLEASE SEE DETAIL 2 / E8120
FOR ALL TYPICAL DETAILS

FIELD BOLTS:			
PAINT:			
HOLES:			
ELECTRODES:	0	01/03/2020	For Approval
BOLTS: U.N.O.	REV	DATE	DESCRIPTION

PARAMOUNT METAL & SUPPLY Co.
8140 E. ROSECRANS AVE., PARAMOUNT, CA 90723
TEL. (562) 634-8180
FAX (562) 634-1350

PROJECT **MID-COAST CORRIDOR TRANSIT PROJECT**
DATE: 12/13/2019
DRAWN: AP
CONTRACTOR MID-COAST TRANSIT CONSTRUCTORS
CHECKED: DL
TITLE VMS COLUMN - VA MEDICAL (NON-UCSD STATION)
DRAWING No.: E8121
WO/PRC NO. WOA335-AE-471
JOBS No.: 471 M

15

C:\TEM\VMS\FOR APPROVAL\E8121.dwg, 1/3/2020 2:13:29 PM, DWG To PDF.pc3

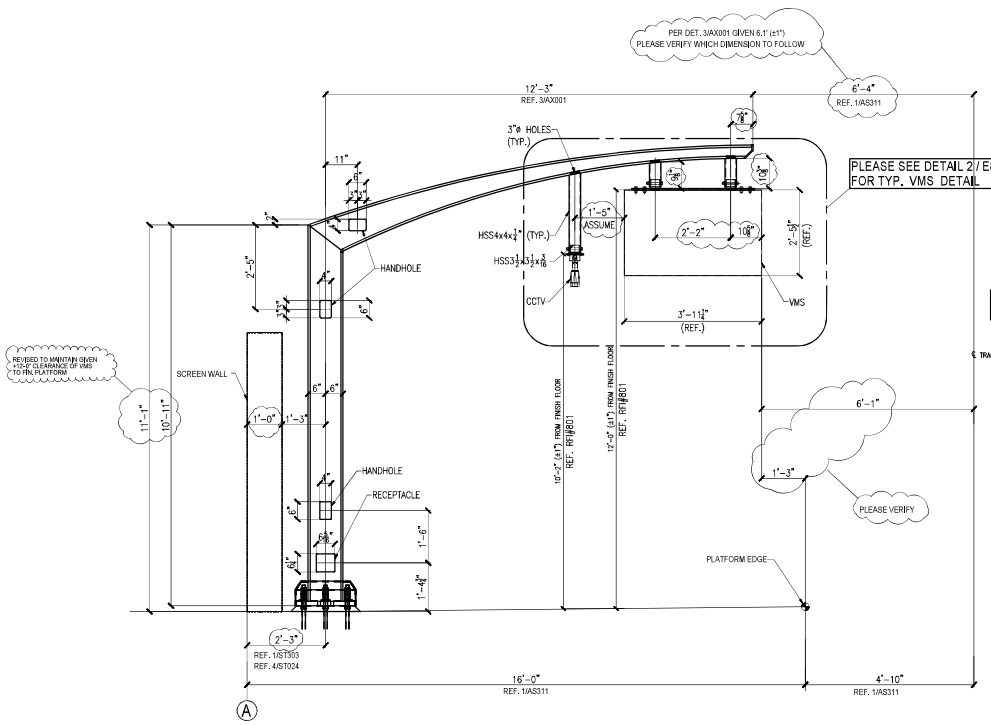

2 LOCATIONS @ GRID A8 & A15

VMS COLUMN BALBOA SOUTHBOUND (1 / E8122)
(NON-UCSD STATION)
(ON-GRADE STATION)
REF. 1/AS311

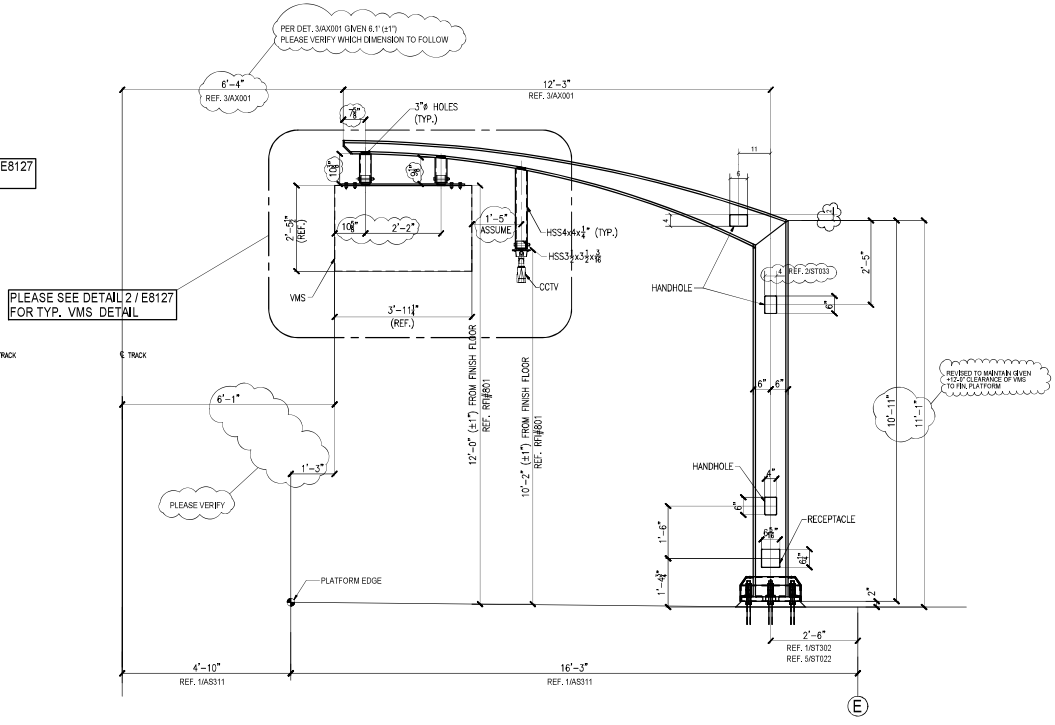

2 LOCATIONS @ GRID E8 & E15

VMS COLUMN BALBOA NORTHBOUND (2 / E8122)
(NON-UCSD STATION)
(GRADE STATION)
REF. 1/AS311

PLEASE SEE DETAIL 2 / E8120
FOR ALL TYPICAL DETAILS

FIELD BOLTS:			
PAINT:			
HOLES:			
ELECTRODES:	0	01/03/2020	For Approval
BOLTS: U.N.O.	REV	DATE	DESCRIPTION

PARAMOUNT METAL & SUPPLY Co.
8140 E. ROSECRANS AVE., PARAMOUNT, CA 90723
TEL. (562) 634-8180
FAX (562) 634-1350

PROJECT: MID-COAST CORRIDOR TRANSIT PROJECT
DATE: 12/20/2019
DRAWN: AP
CONTRACTOR: MID-COAST TRANSIT CONSTRUCTORS
CHECKED: DL
TITLE: VMS COLUMN - BALBOA (NON-UCSD STATION)
DRAWING No.: E8122
M&P INC NO. WOA335-AB-E8122
JOBS No.: 471 M

C:\TEMP\VMS\FOR APPROVAL\E8122.dwg, 1/3/2020 2:14:04 PM, DWG To PDF.pc3

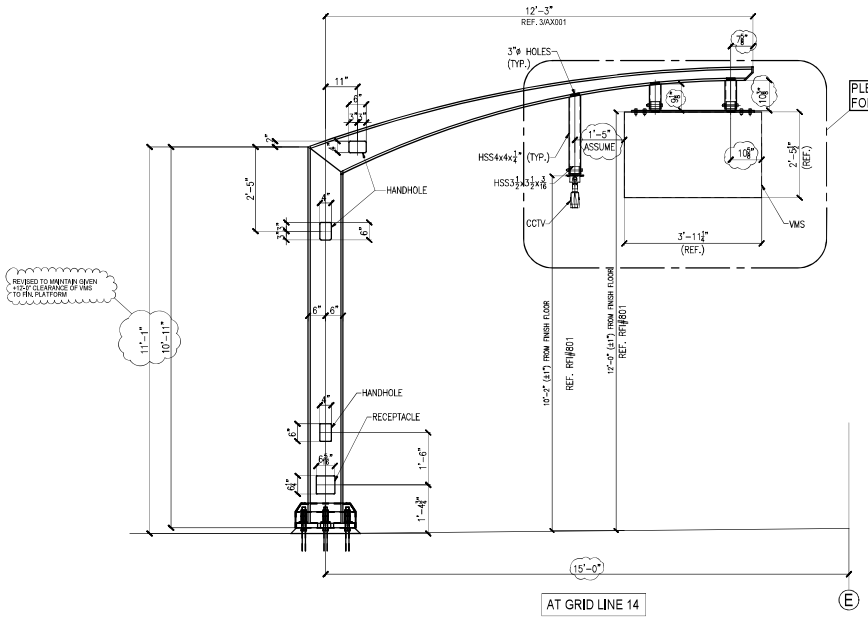

VMS COLUMN BALBOA NORTHBOUND (1 / E8123)
(NON-UCSD STATION)
(ON-GRADE STATION)
REF. 1/AS311

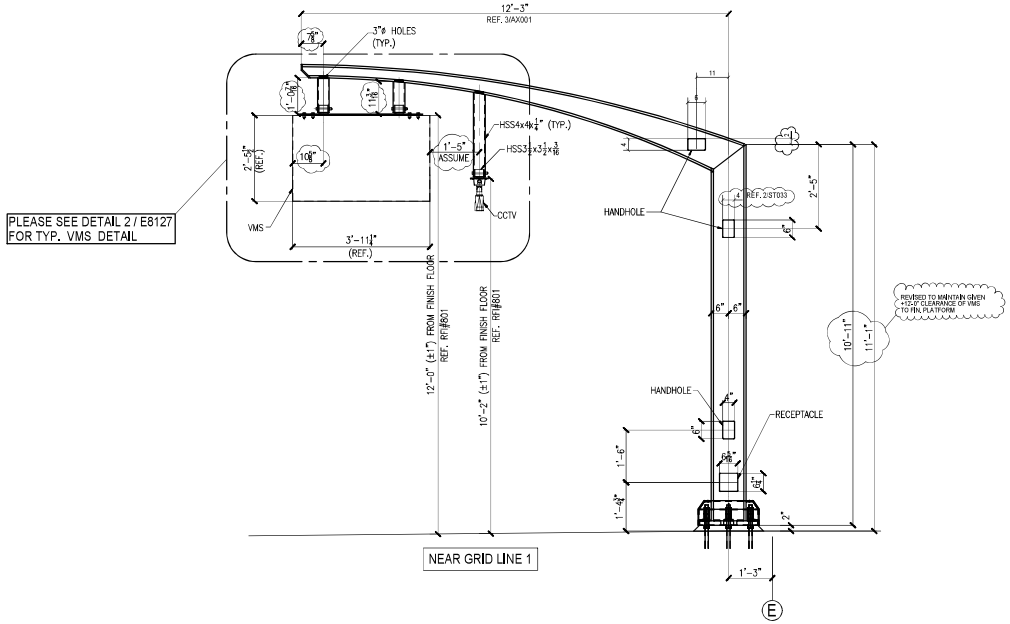

VMS COLUMN BALBOA NORTHBOUND (2 / E8123)
(NON-UCSD STATION)
(ON-GRADE STATION)
REF. 1/AS311

PLEASE SEE DETAIL 2 / E8120
FOR ALL TYPICAL DETAILS

FIELD BOLTS:			
PAINT:			
HOLES:			
ELECTRODES:	0	01/03/2020	For Approval
BOLTS: U.N.O.	REV	DATE	DESCRIPTION

PARAMOUNT METAL & SUPPLY Co.
8140 E. ROSECRANS AVE., PARAMOUNT, CA 90723
TEL. (562) 634-8180
FAX (562) 634-1350

PROJECT: MID-COAST CORRIDOR TRANSIT PROJECT
DATE: 12/20/2019
DRAWN: AP
CONTRACTOR: MID-COAST TRANSIT CONSTRUCTORS
CHECKED: DL
TITLE: VMS COLUMN - BALBOA (NON-UCSD STATION)
DRAWING No.: E8123
JOBS No.: 471 M

C:\TEM\VMS\FOR APPROVAL\E8123.dwg, 1/3/2020 2:14:40 PM, DWG To PDF.pc3

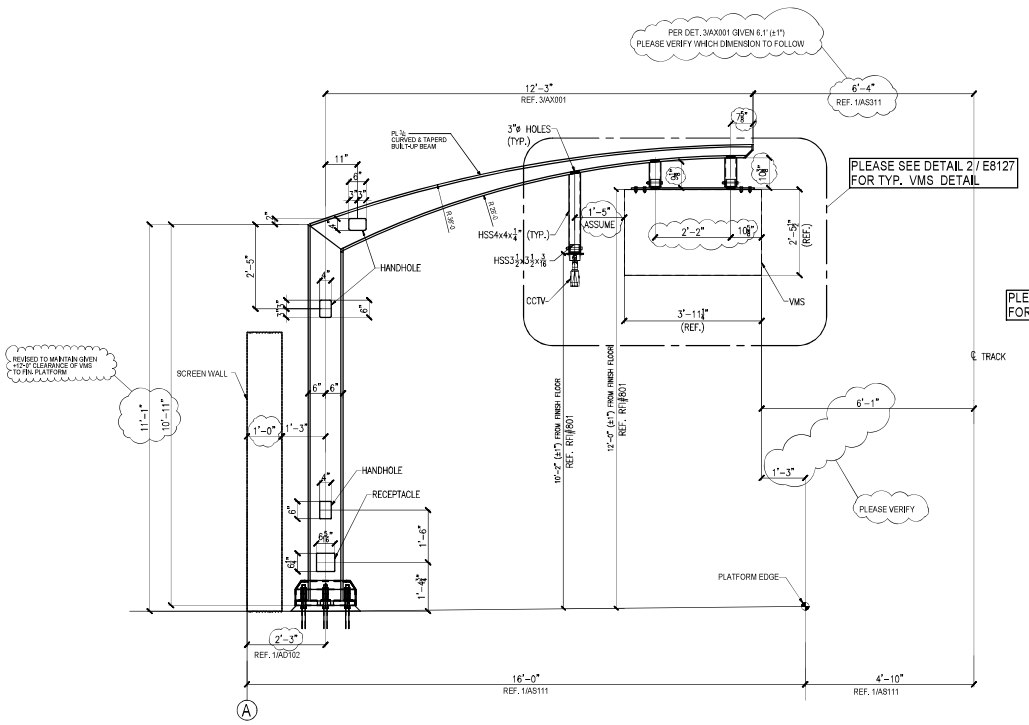

2 LOCATIONS @ GRID A8 & A15

VMS COLUMN TECOLOTE SOUTHBOUND (1 / E8124)

(NON-UCSD STATION)
(ON-GRADE STATION)
REF. 1/AS311

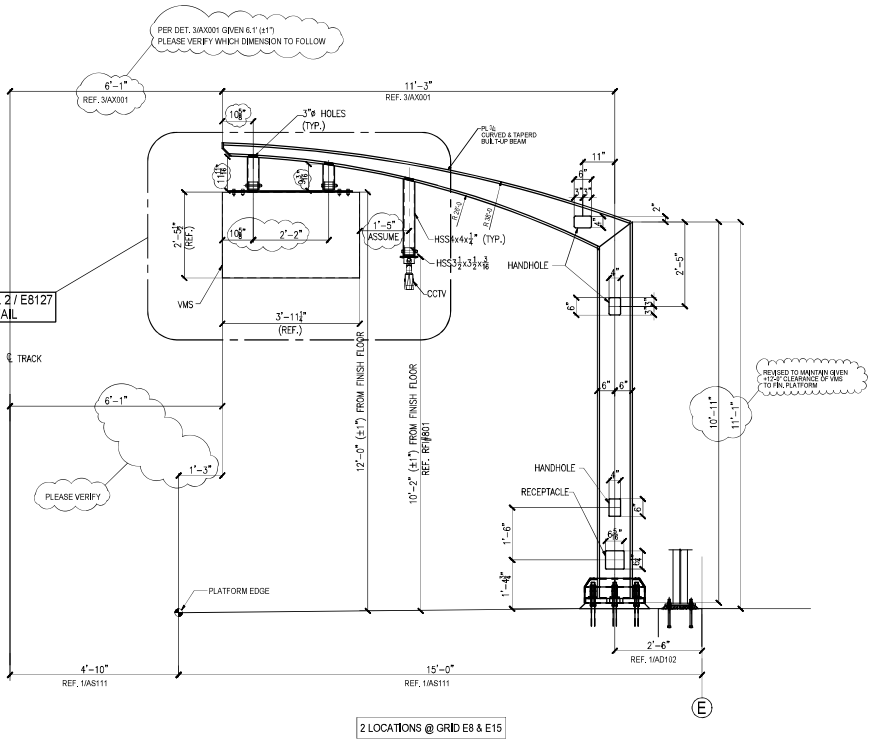

2 LOCATIONS @ GRID E8 & E15

VMS COLUMN TECOLOTE NORTHBOUND (1 / E8124)

(NON-UCSD STATION)
(ON-GRADE STATION)
REF. 1/AS111

PLEASE SEE DETAIL 2 / E8120
FOR ALL TYPICAL DETAILS

FIELD BOLTS:			
PAINT:			
HOLES:			
ELECTRODES:	0	01/03/2020	For Approval
BOLTS: U.N.O.	REV	DATE	DESCRIPTION

PARAMOUNT METAL & SUPPLY Co.
8140 E. ROSECRANS AVE., PARAMOUNT, CA 90723
TEL. (562) 634-8180
FAX (562) 634-1350

PROJECT: MID-COAST CORRIDOR TRANSIT PROJECT
DATE: 12/20/2019
DRAWN: AP
CONTRACTOR: MID-COAST TRANSIT CONSTRUCTORS
CHECKED: DL
TITLE: VMS COLUMN - TECOLOTE (NON-UCSD STATION)
DRAWING No.: E8124
JOBS No.: 471 M

C:\TEM\VMS\FOR APPROVAL\E8124.dwg, 1/3/2020 2:15:22 PM, DWG To PDF.pc3

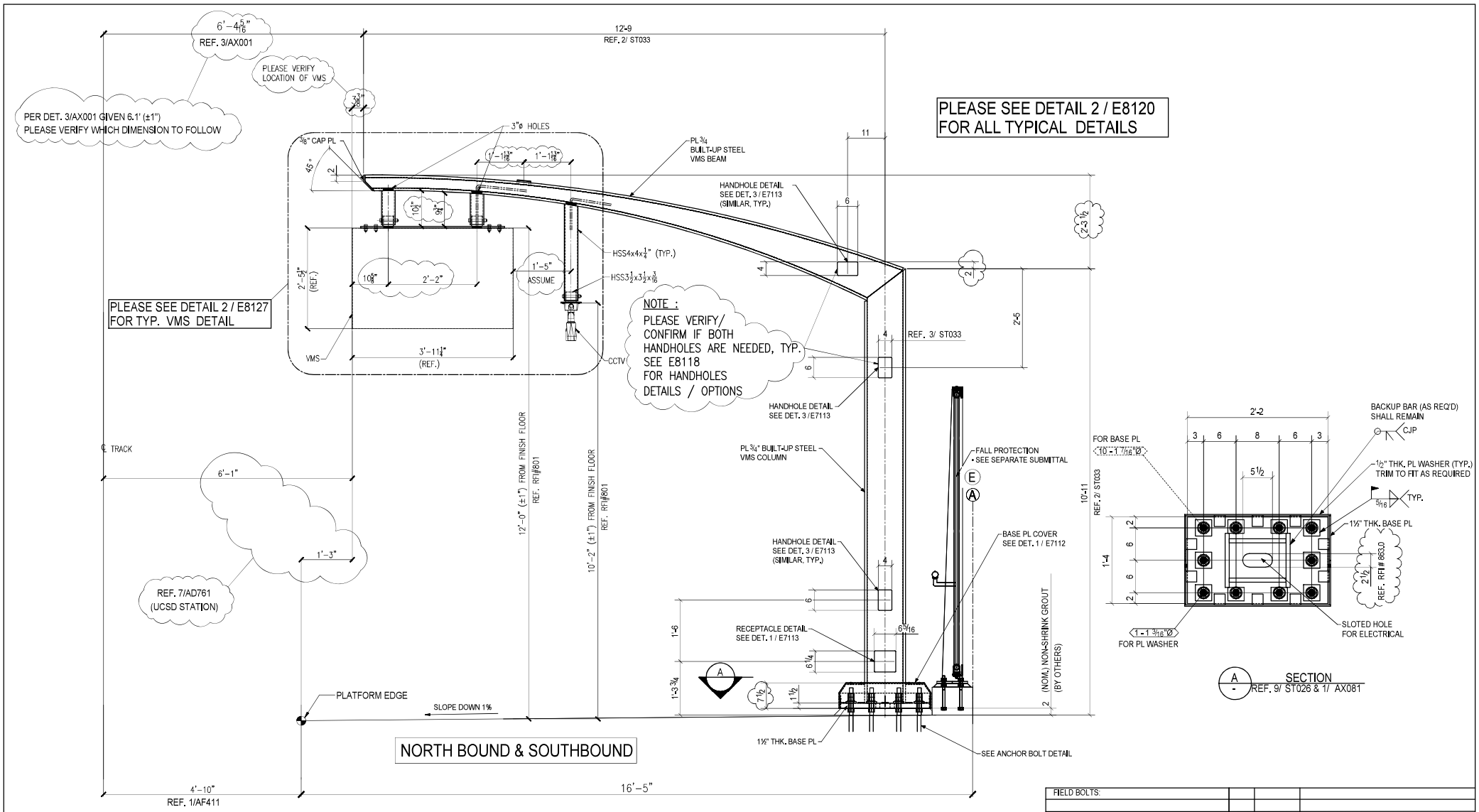

NOBEL
EXECUTIVE
UTC

NOBEL STATION - 4 LOCATIONS @ GRID A8, A17, E8 & E15

EXECUTIVE STATION - 4 LOCATIONS @ GRID A7, A14, E4 & E11

UTC STATION - 4 LOCATIONS @ GRID A7, A14, E7 & E14

VMS COLUMN - AERAIL / NON-UCSD STATION
REF. 3/AX001, 2/ ST033

FIELD BOLTS:			
PAINT:			
HOLES:			
ELECTRODES:	0	01/03/2020	For Approval
BOLTS: U.N.O.	REV	DATE	DESCRIPTION

PARAMOUNT METAL & SUPPLY Co.
8140 E. ROSECRANS AVE., PARAMOUNT, CA 90723
TEL. (562) 634-8180
FAX (562) 634-1350

PROJECT: MID-COAST CORRIDOR TRANSIT PROJECT
CONTRACTOR: MID-COAST TRANSIT CONSTRUCTORS
TITLE: VMS COLUMN - AERIAL (NON-UCSD STATION)

DATE: 11/20/2019
DRAWN: AP
CHECKED: DL
DRAWING No.: E8125
JOBS No.: 471 M

C:\TEM\VMS\FOR APPROVAL\E8125.dwg, 1/3/2020 2:16:05 PM, DWG To PDF.pc3

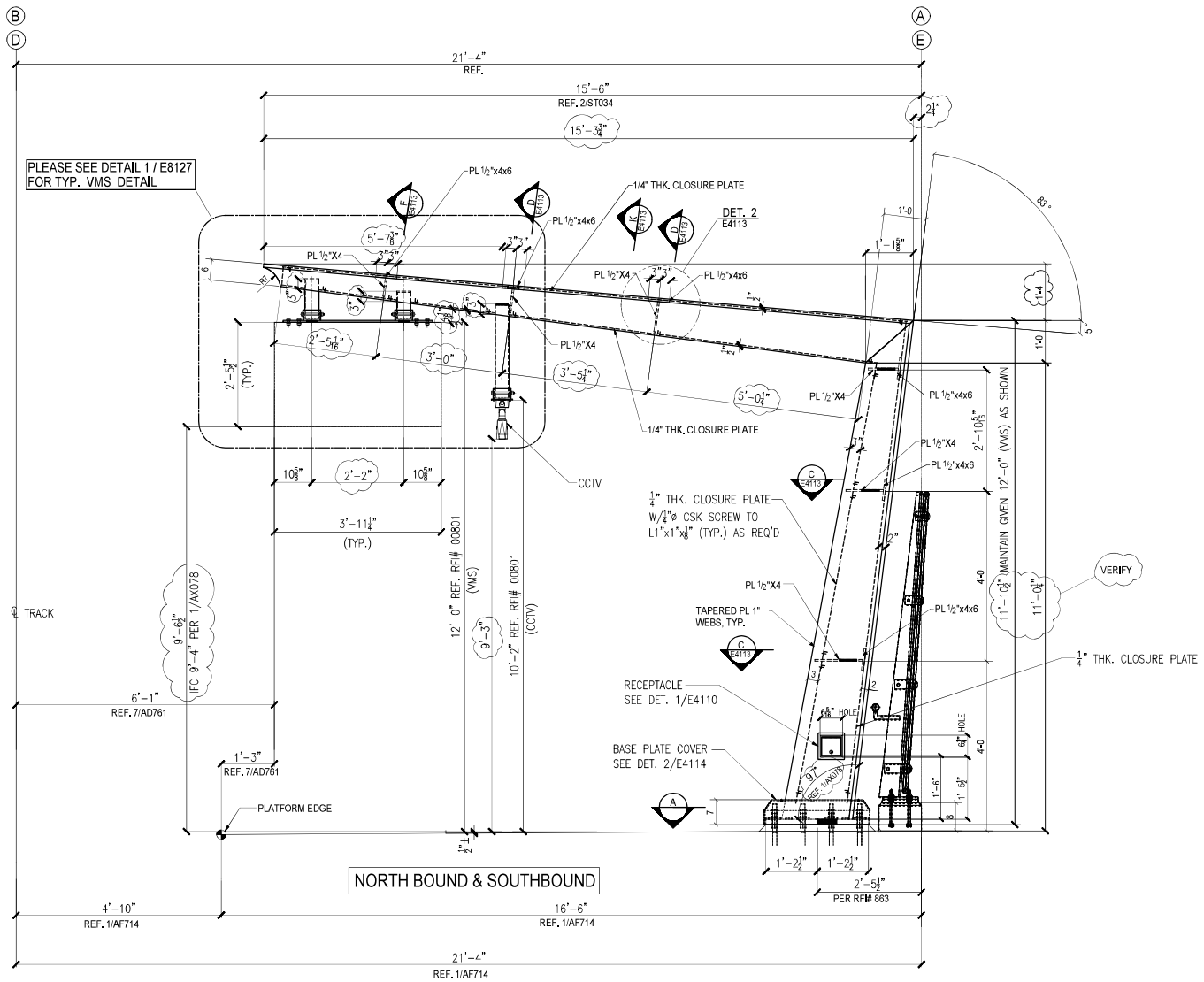

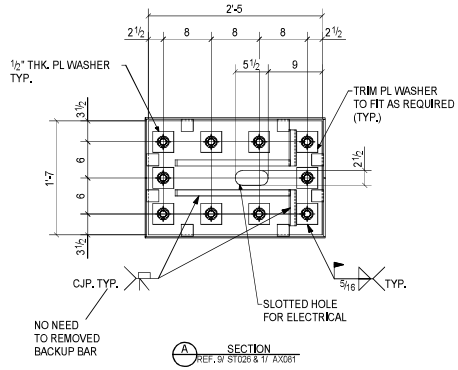

VOIGT STATION - 4 LOCATIONS @ GRID A9, A16, E6 & E13

PEPPER STATION - 4 LOCATIONS @ GRID A9, A16, E6 & E13

VOIGT
PEPPER

VMS COLUMN VOIGT & PEPPER

(UCSD STATION)

REF. 2/AS711, 1/AF714

FIELD BOLTS:			
PAINT:			
HOLES:			
ELECTRODES:	0	01/03/2020	For Approval
BOLTS: U.N.O.	REV	DATE	DESCRIPTION

PARAMOUNT METAL & SUPPLY Co.
8140 E. ROSECRANS AVE., PARAMOUNT, CA 90723
TEL. (562) 634-8180
FAX (562) 634-1350

PROJECT MID-COAST CORRIDOR TRANSIT PROJECT	DATE: 12/20/2019
	DRAWN: AP
CONTRACTOR MID-COAST TRANSIT CONSTRUCTORS	CHECKED: DL
TITLE VMS COLUMN - AERIAL (UCSD STATION)	DRAWING No.: E8126
	JOBS No.: 471 M

C:\TEM\VMS\FOR APPROVAL\E8126.dwg, 1/3/2020 2:16:40 PM, DWG To PDF.pc3

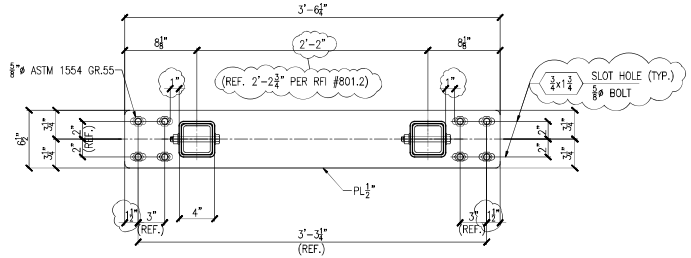

SECT. A
(REF. RFI# 801.2)

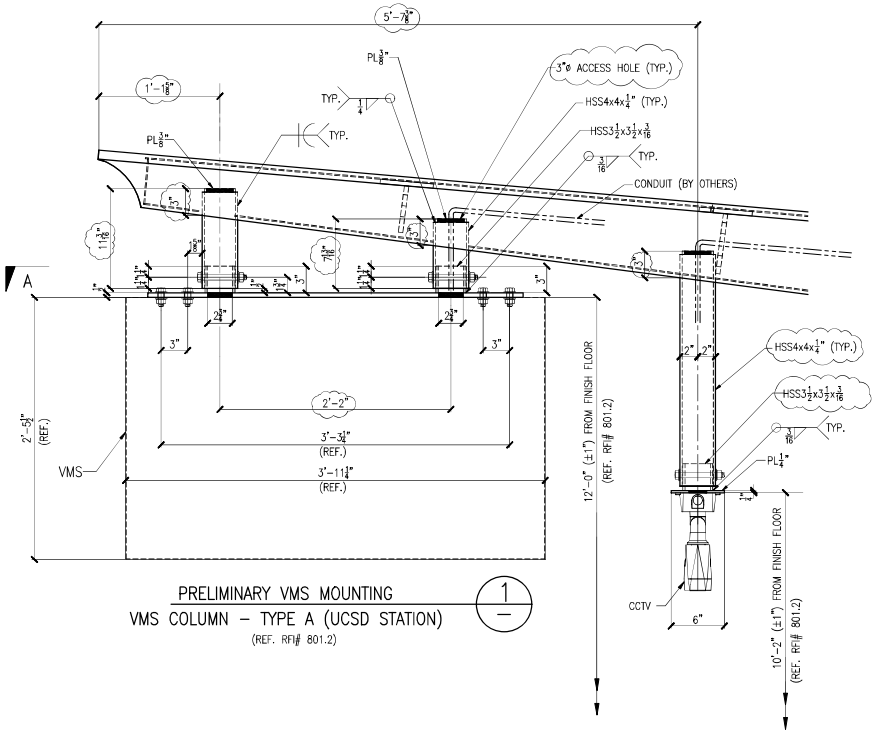

PRELIMINARY VMS MOUNTING
VMS COLUMN – TYPE A (UCSD STATION) 1
(REF. RFI# 801.2)

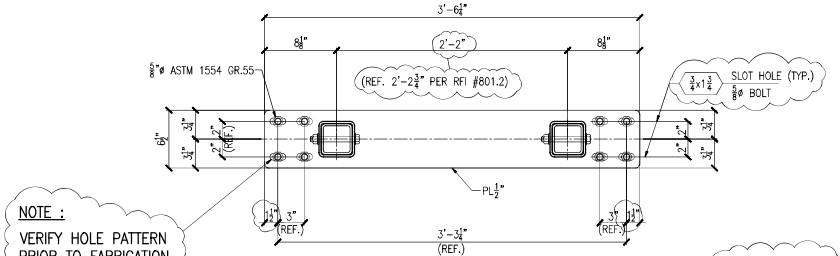

NOTE :
VERIFY HOLE PATTERN PRIOR TO FABRICATION REF. RFI.# 801.2

SECT. B

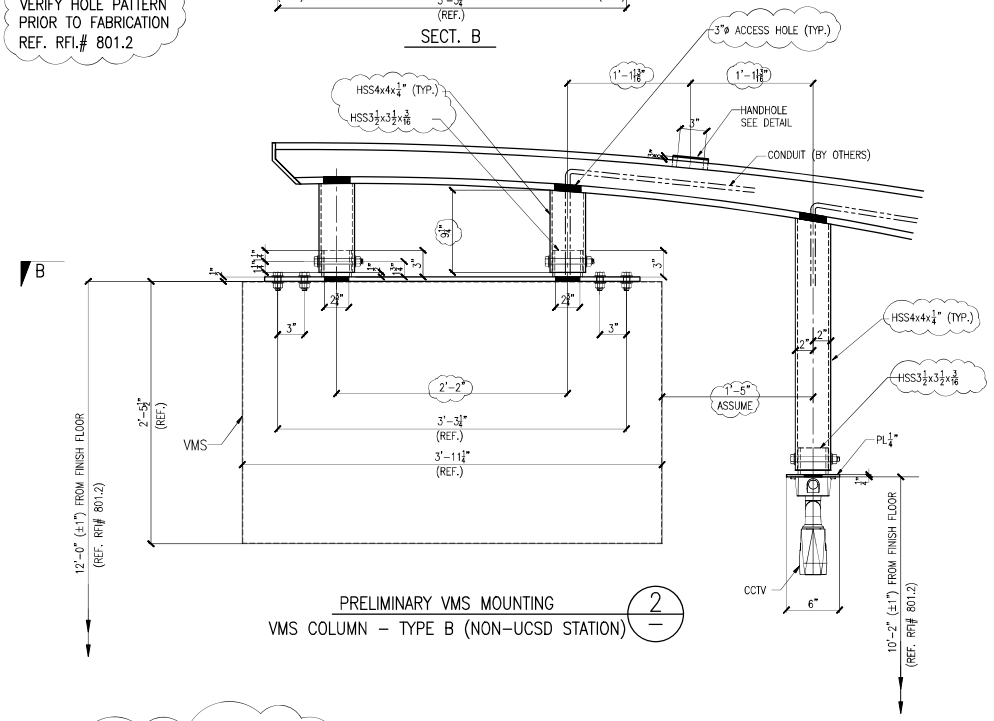

PRELIMINARY VMS MOUNTING
VMS COLUMN – TYPE B (NON-UCSD STATION) 2

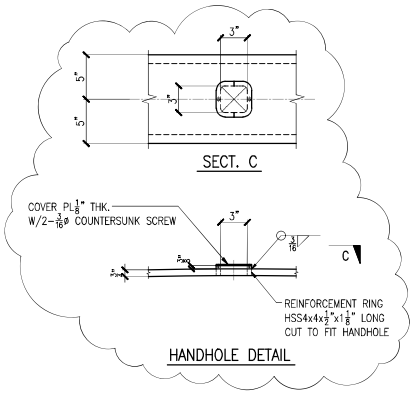

FIELD BOLTS:			
PAINT:			
HOLES:			
ELECTRODES:	0	01/03/2020	For Approval
BOLTS: U.N.O.	REV	DATE	DESCRIPTION

PARAMOUNT METAL & SUPPLY Co.
8140 E. ROSECRANS AVE., PARAMOUNT, CA 90723
TEL. (562) 634-8180
FAX (562) 634-1350

PROJECT: MID-COAST CORRIDOR TRANSIT PROJECT
DATE: 03/27/2019
DRAWN: AP
CONTRACTOR: MID-COAST TRANSIT CONSTRUCTORS
CHECKED: DL
TITLE: VMS COLUMN - DETAILS
DRAWING No.: E8127
MTS DWG 471 M

C:\TEM\VMS\FOR APPROVAL\E8127.dwg, 1/3/2020 2:17:36 PM, DWG To PDF.pc3

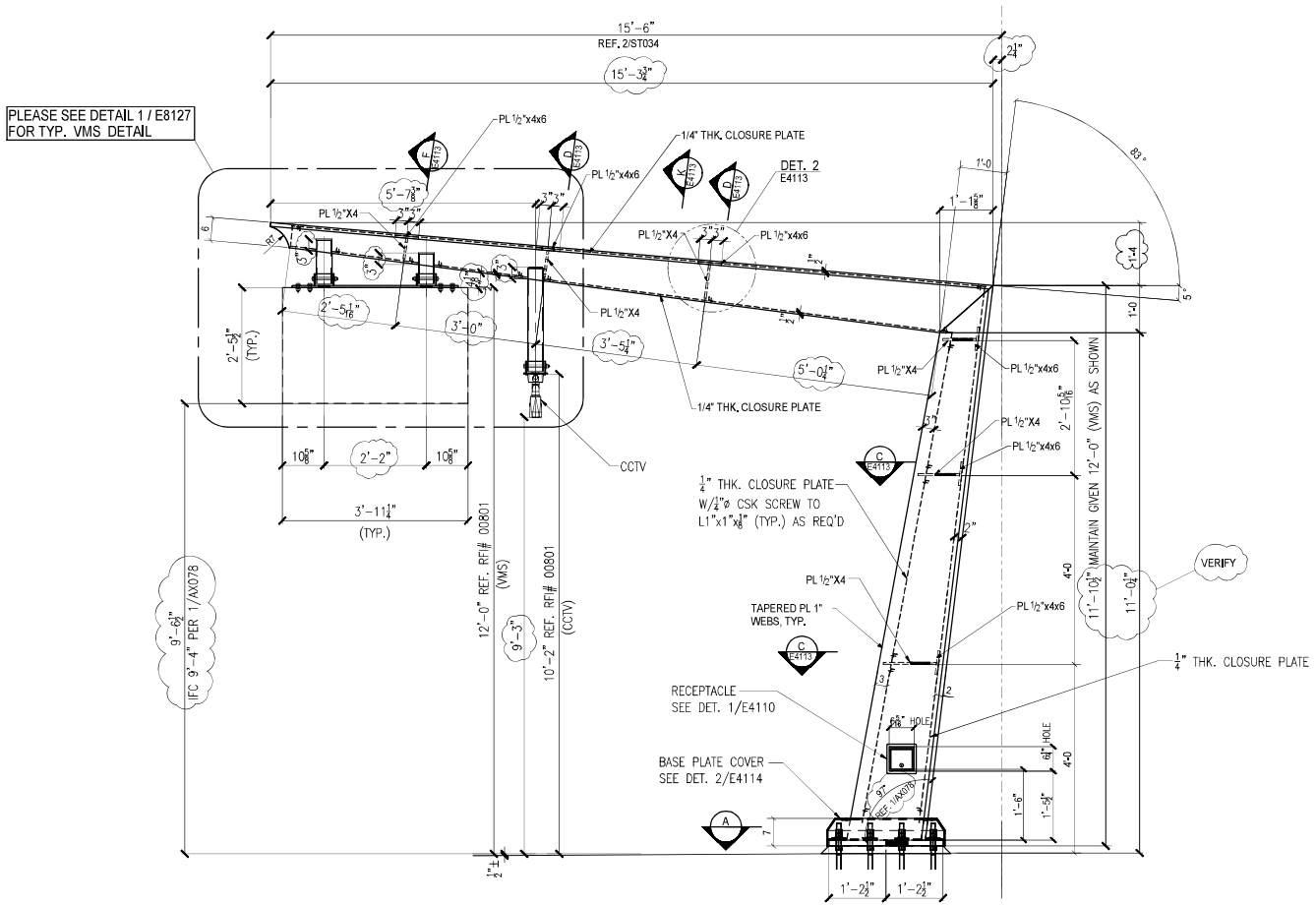

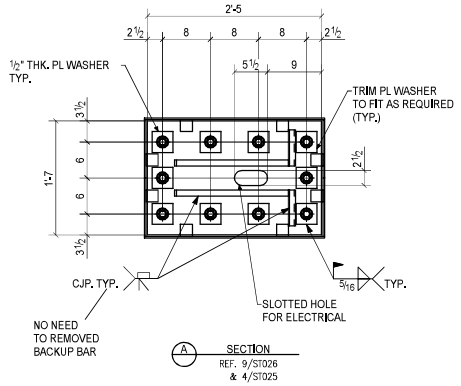

OFF-PLATFORM
VOIGT
PEPPER

VOIGT STATION - 3 LOCATIONS

PEPPER STATION - 1 LOCATION

VMS COLUMN OFF- PLATFORM VOIGT & PEPPER (1 / E8128)

(UCSD STATION)

REF. 2/AS711, 1/AF714

FIELD BOLTS:			
PAINT:			
HOLES:			
ELECTRODES:	0	01/03/2020	For Approval
BOLTS: U.N.O.	REV	DATE	DESCRIPTION

PARAMOUNT METAL & SUPPLY Co.
8140 E. ROSECRANS AVE., PARAMOUNT, CA 90723
TEL. (562) 634-8180
FAX (562) 634-1350

PROJECT MID-COAST CORRIDOR TRANSIT PROJECT	DATE: 01/2/2020
	DRAWN: AP
CONTRACTOR MID-COAST TRANSIT CONSTRUCTORS	CHECKED: DL
TITLE VMS COLUMN - OFF-PLATFORM (UCSD STATION)	DRAWING No.: E8128
	JOBS No.: 471 M

C:\TEM\VMS\FOR APPROVAL\E8128.dwg, 1/3/2020 2:18:16 PM, DWG To PDF.pc3

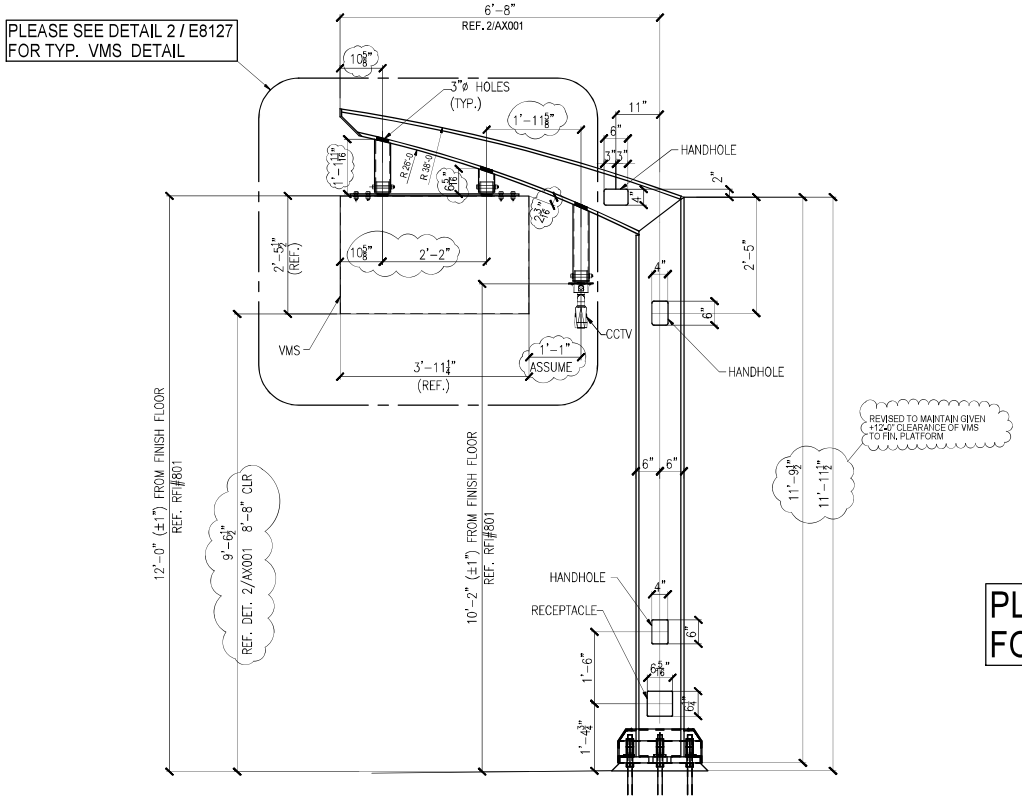

PLEASE SEE DETAIL 2 / E8120
FOR ALL TYPICAL WELDING DETAIL

BALBOA STATION - 2 LOCATIONS

TECOLOTE STATION - 3 LOCATIONS

VMS COLUMN OFF-PLATFORM (1 / E8129)

REF. 2/AX011 & 11/ST035

OFF-PLATFORM
BALBOA
TECOLOTE

FIELD BOLTS:			
PAINT:			
HOLES:			
ELECTRODES:	0	01/03/2020	For Approval
BOLTS: U.N.O.	REV	DATE	DESCRIPTION

PARAMOUNT METAL & SUPPLY Co.
8140 E. ROSECRANS AVE., PARAMOUNT, CA 90723
TEL. (562) 634-8180
FAX (562) 634-1350

PROJECT MID-COAST CORRIDOR TRANSIT PROJECT	DATE: 01/2/2020
	DRAWN: AP
CONTRACTOR MID-COAST TRANSIT CONSTRUCTORS	CHECKED: DL
TITLE VMS COLUMN - OFF-PLATFORM (NON-UCSD STATION)	DRAWING No.: E8129
	JOBS No.: 471 M

C:\TEM\VMS\FOR APPROVAL\E8129.dwg, 1/3/2020 2:18:56 PM, DWG To PDF.pc3

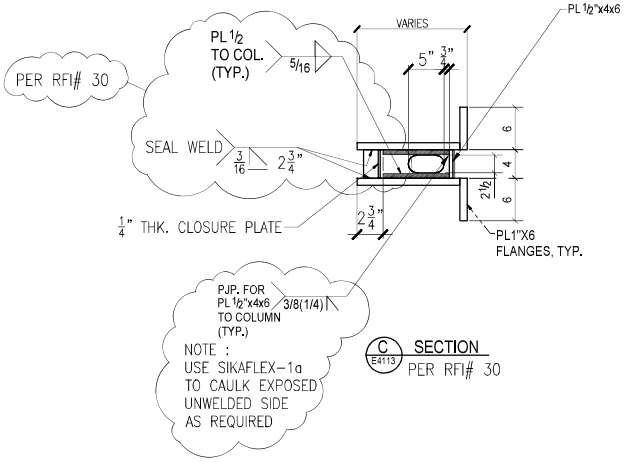

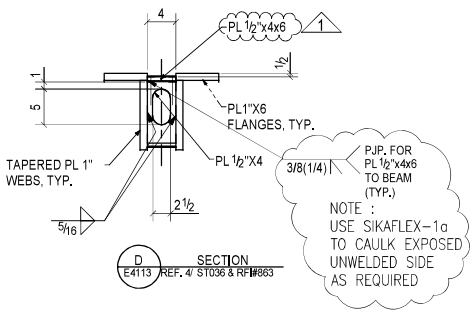

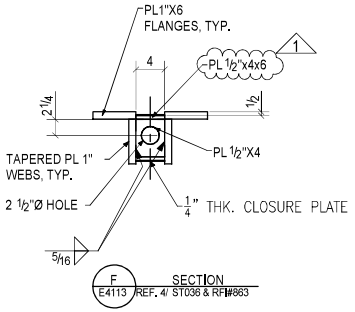

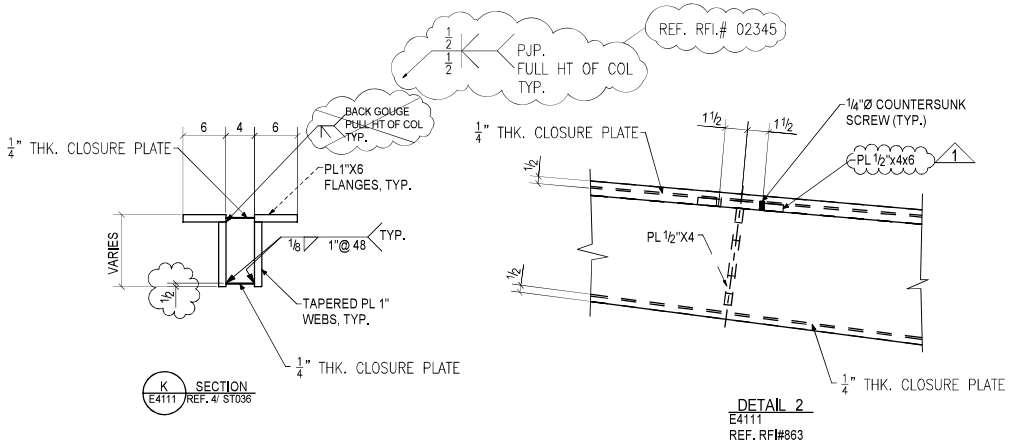

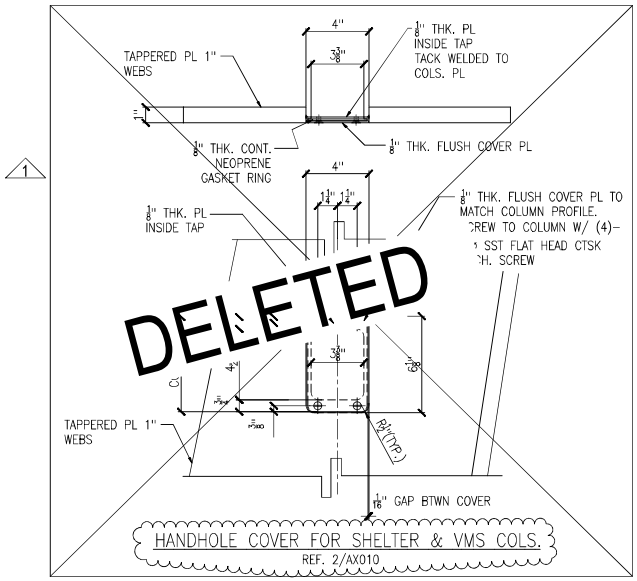

CHECKER
PLEASE VERIFY
ALL CLOUDED AREA

FOR MATERIAL & SHOP FABRICATION SEE DWG.NO.E4100

FIELD BOLTS:			
PAINT:			
HOLES:	1	09/07/2018	RE-SUBMITTED PER MARKUP ON 6/20/18
ELECTRODES:	0	06/20/2018	For Approval
BOLTS: U.N.O.	REV	DATE	DESCRIPTION

PARAMOUNT METAL & SUPPLY Co.
8140 E. ROSECRANS AVE., PARAMOUNT, CA 90723
TEL. (562) 634-8180
FAX (562) 634-1350

PROJECT: MID-COAST CORRIDOR TRANSIT PROJECT	DATE: 09/13/2018
	DRAWN: AP
CONTRACTOR: MID-COAST TRANSIT CONSTRUCTORS	CHECKED: DL
TITLE: VMS COLUMN- DETAILS	DRAWING No.: E4113

C:\TEM\VMS\FOR APPROVAL\67 - E4113.dwg, 1/3/2020 3:01:08 PM, DWG To PDF.pc3

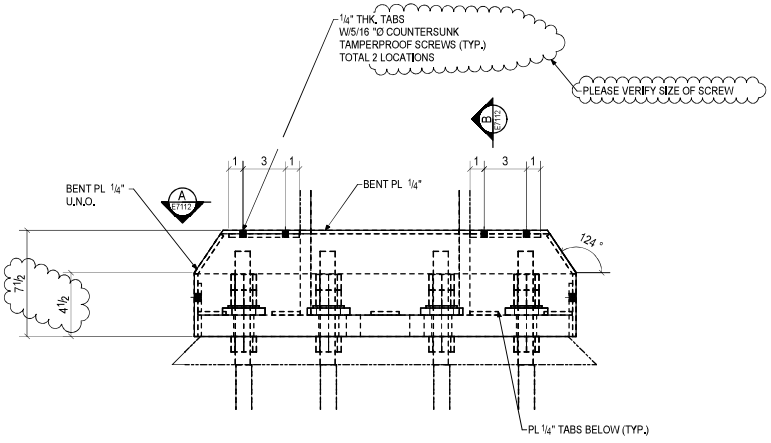

1 E7112 BASE PLATE COVER DETAIL
REF. 1, 2 & 3/ AX075

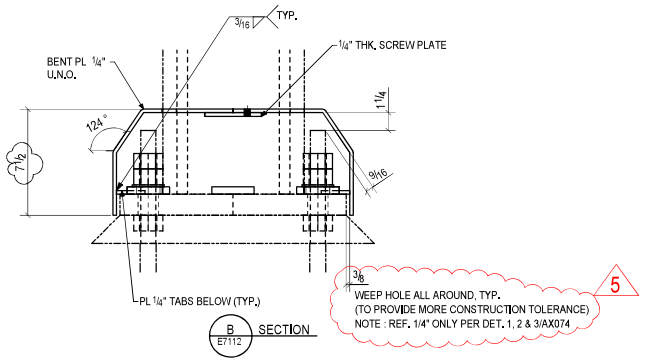

B E7112 SECTION

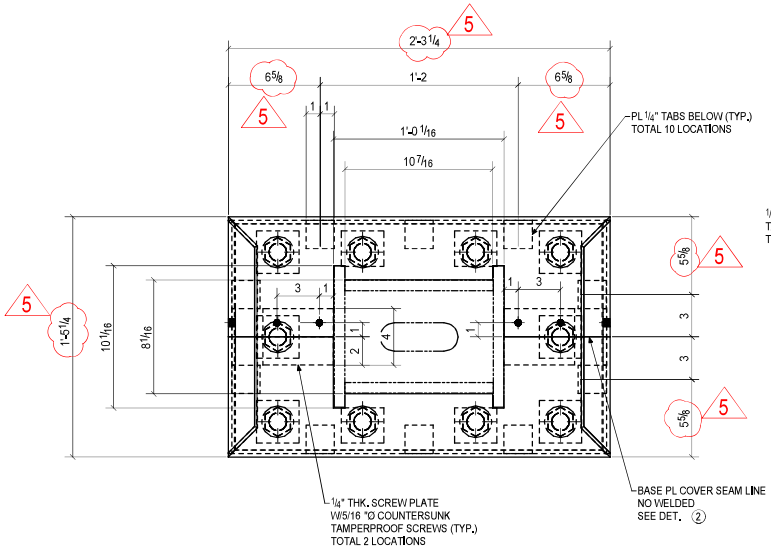

A E7112 ELEVATION

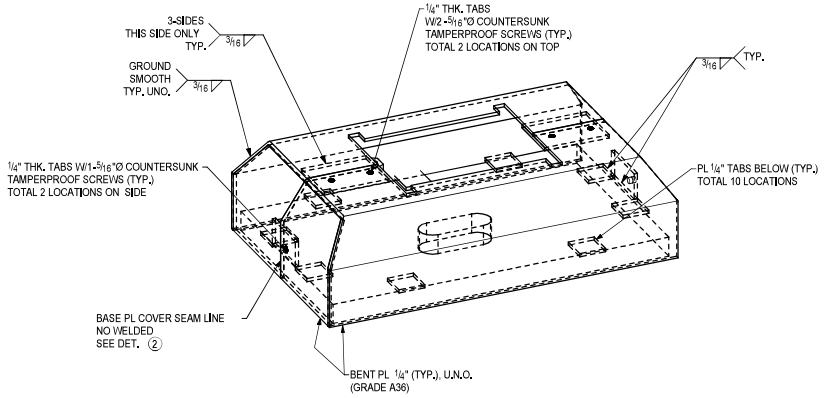

3D-VIEW

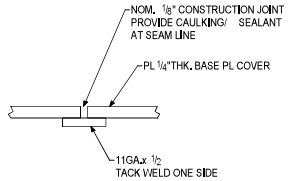

DETAIL 2

FOR MATERIAL & SHOP FABRICATION SEE DWG.NO.E7100

NOTES.

PROVIDE SEALANT AT CONTACT POINTS BETWEEN SHELTER COLUMN AND BASE PLATE COVER AS WEEL AS AT SEAM LINES BETAWEEN BESE PLATE COVERS.

	REV	DATE	DESCRIPTION
FIELD BOLTS:	5	10/01/2019	UPDATE SEPTEMBER 2019
	4	09/25/2019	REV. PER RFI# 02345
PAINT:	3	09/25/2019	REV. PER RFI# 02226
HOLES:	2	09/25/2019	REV. PER SUBMITTAL# 03025-0 COMMENT
ELECTRODES:	0	09/17/2018	For Approval
BOLTS: U.N.O.			

PARAMOUNT METAL & SUPPLY Co.
8140 E. ROSECRANS AVE., PARAMOUNT, CA 90723
TEL. (562) 634-8180
FAX (562) 634-1350

PROJECT: MID-COAST CORRIDOR TRANSIT PROJECT
DATE: 09/17/2018
DRAWN: AP
CONTRACTOR: MID-COAST TRANSIT CONSTRUCTORS
CHECKED: DL
TITLE: BASE PLATE COVER -TYPE 3 DETAILS
DRAWING No.: E7112
JOBS No.: 471 M

MTS SPEC NO. W/O AX55-AE-19

H:\471M-MCCT\TYPE 1,2&3(CAD)\12-20-2019\E7112-REV1.dwg, 12/20/2019 1:09:10 PM, DWG To PDF.pc3

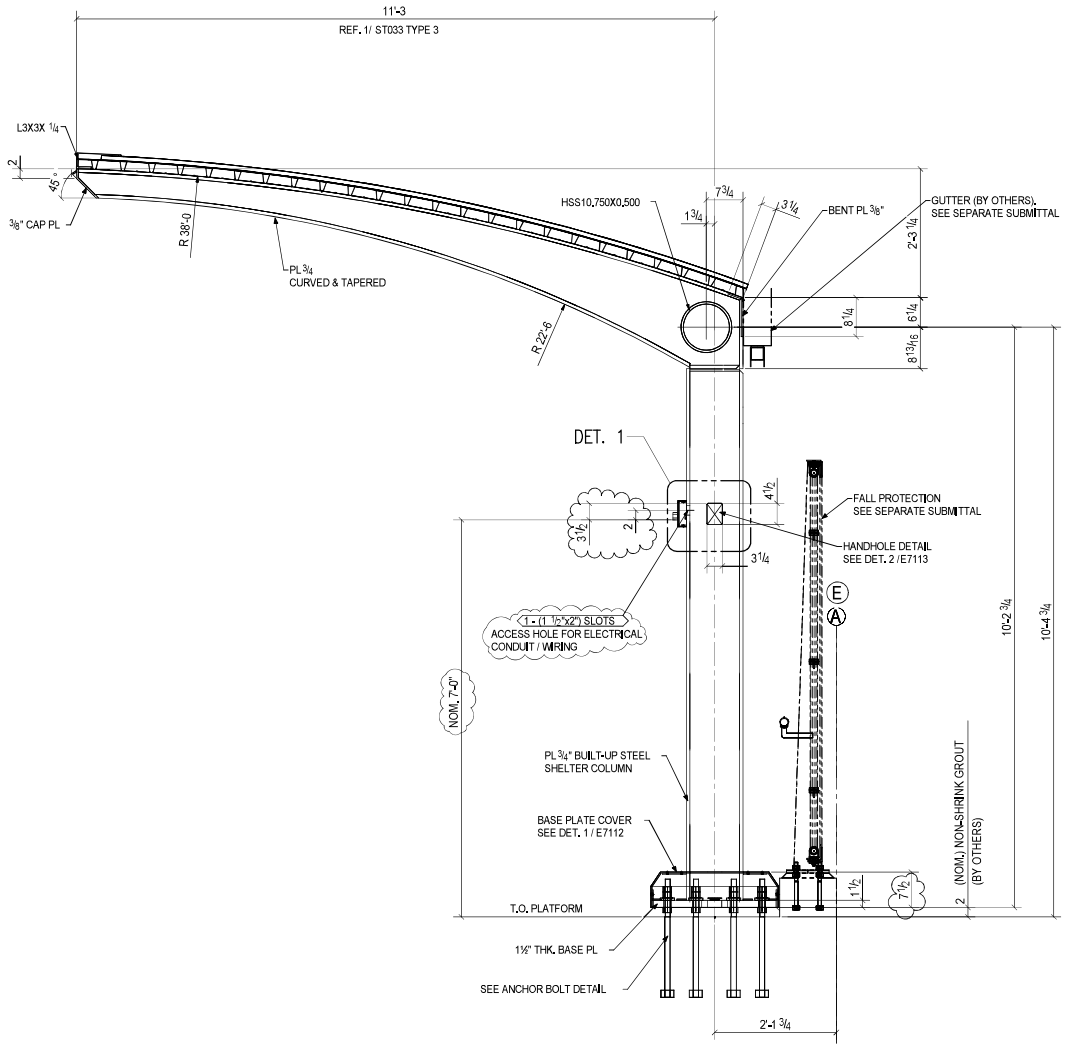

HORN STROBE DETAIL - SHELTER COLUMN TYPE 3
& VMS COLUMN (AERIAL NON-UCSD STATION)

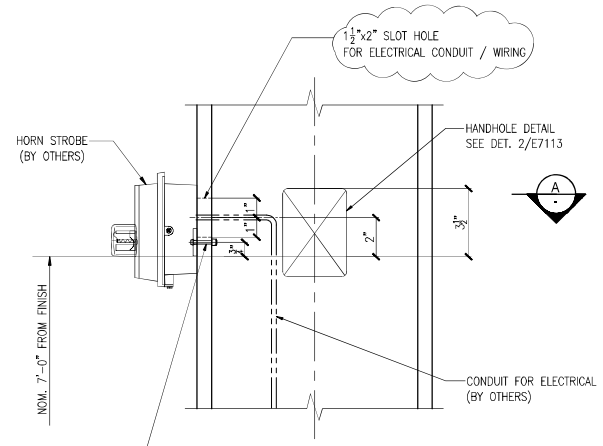

DETAIL 1

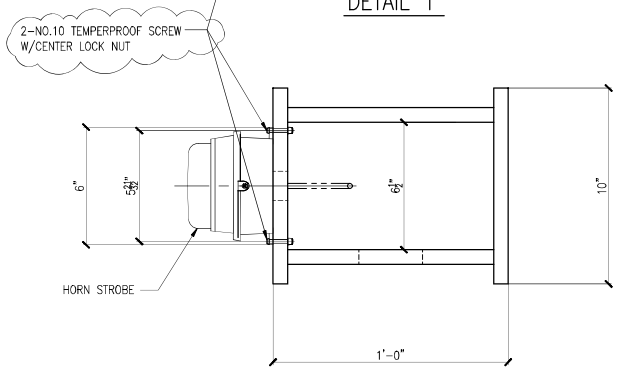

SECT. A

NOTE :

SEE KEY PLANS E2100, E6100, & E8100
FOR HORNSTROBE LOCTION.

FIELD BOLTS:			
PAINT:			
HOLES:			
ELECTRODES:	5	10/01/2019	UPDATE SEPTEMBER 2019
BOLTS: U.N.O.	REV	DATE	DESCRIPTION

PARAMOUNT METAL & SUPPLY Co.
8140 E. ROSECRANS AVE., PARAMOUNT, CA 90723
TEL. (562) 634-8180
FAX (562) 634-1350

PROJECT: MID-COAST CORRIDOR TRANSIT PROJECT
DATE: 07-15-2019
DRAWN: AP
CONTRACTOR: MID-COAST TRANSIT CONSTRUCTORS
CHECKED: DL
TITLE: HORN STROBE MOUNTING DETAILS
DRAWING No.: E7115
JOB No.: 474.M

C:\TEM\VMS\FOR APPROVAL\E7115.dwg, 1/3/2020 3:16:32 PM, DWG To PDF.pc3

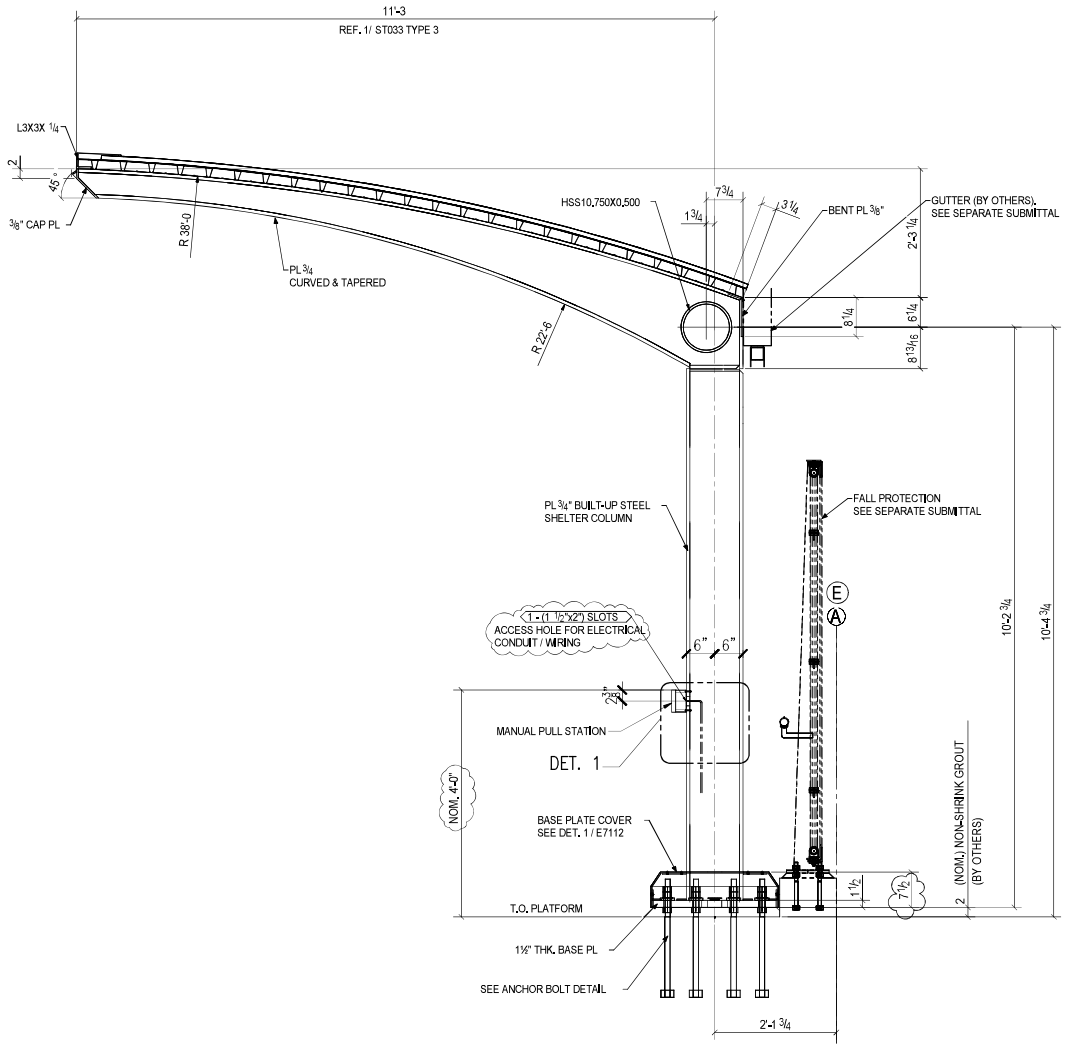

MANUAL PULL STATION DETAIL - SHELTER COLUMN TYPE 3
& VMS COLUMN (AERIAL NON-UCSD STATION)

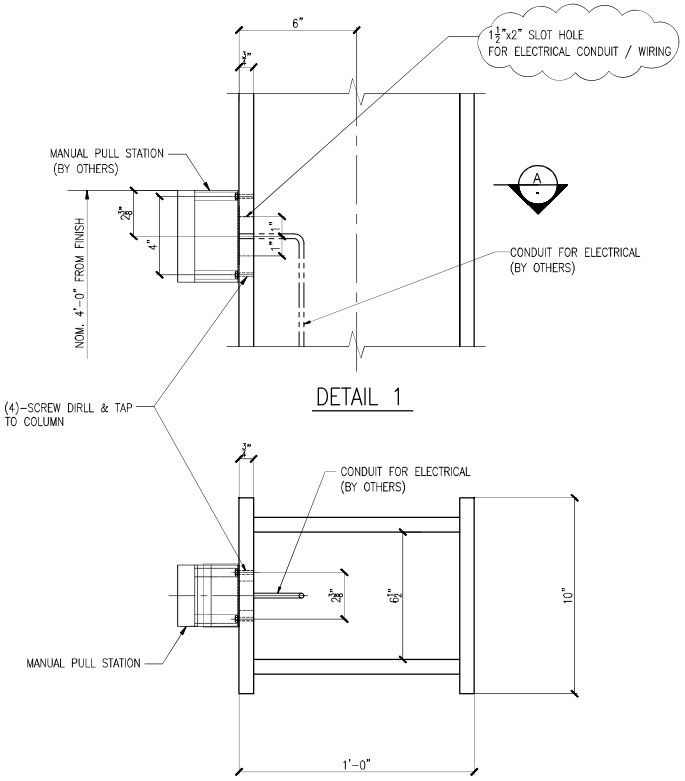

SECT. A

NOTE :
SEE KEY PLANS E2100, E6100, & E8100
FOR MANUAL PULL STATION LOCTION.

FIELD BOLTS:			
PAINT:			
HOLES:			
ELECTRODES:	5	10/01/2019	UPDATE SEPTEMBER 2019
BOLTS: U.N.O.	REV	DATE	DESCRIPTION

PARAMOUNT METAL & SUPPLY Co.
8140 E. ROSECRANS AVE., PARAMOUNT, CA 90723
TEL. (562) 634-8180
FAX (562) 634-1350

PROJECT: MID-COAST CORRIDOR TRANSIT PROJECT	DATE: 07-16-2019
	DRAWN: AP
CONTRACTOR: MID-COAST TRANSIT CONSTRUCTORS	CHECKED: DL
TITLE: MANUAL PULL STATION MOUNTING DETAILS	DRAWING No.: E7116
	JOB No.: 474.M

C:\TEM\VMS\FOR APPROVAL\E7116.dwg, 1/3/2020 3:15:48 PM, DWG To PDF.pc3



VIEW OF MOCK UP HANDHOLE
REF. APPROVED ELEVATOR HOISTWAY STRUCTURE

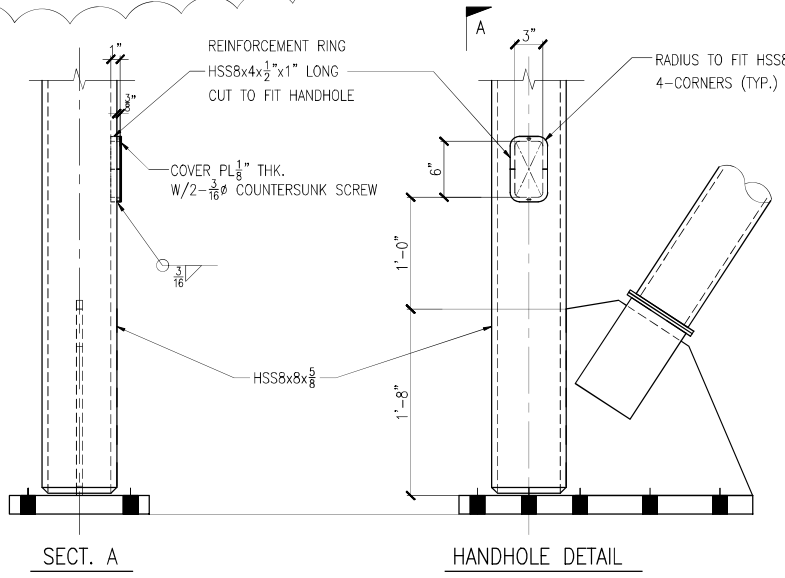

PROPOSED ALTERNATE HANDHOLE DETAIL 1
(REF. APPROVED ELEVATOR HOISTWAY STRUCTURE)

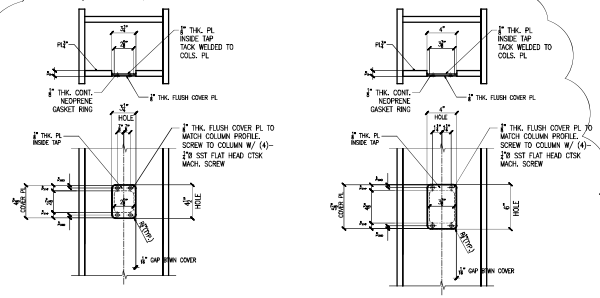

2 HANDHOLE COVER FOR SHELTER COLS.
REF. 2/AX010, 4/AX073 & 1/ST033

3 HANDHOLE COVER FOR VMS COLS.
REF. 2/AX010, 3/AX001 & 2/ST033

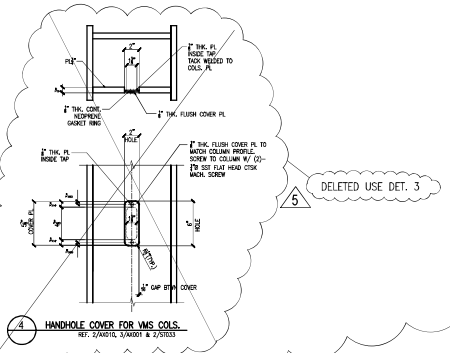

4 HANDHOLE COVER FOR VMS COLS.
REF. 2/AX010, 3/AX001 & 2/ST033

5 DELETED USE DET. 3

CONTRUCTIBILITY REVIEW:

1. PRIOR APPROVED "FLUSH-MOUNTED" COVER PLATE. (DET. 2 & 3 PER SUBMITTAL NO. 03026-0 / REF. IFC DET. 2/AX010) WILL REQUIRED A HARDLY ACHIEVED / AESS COMPLIANT "MATCHING" CUT-OPENING AT THE ¾" THK. COLUMN PLATE WHICH IS TOO THICK TO BE PRECISELY CUT-TO-SHAPE/SIZE IN CONFORMANCE WITH AESS SPECS.
2. ALTERNATELY, PROPOSED REINFORCED HANDHOLE DET. 1 (SIMILAR TO THOSE BEING APPROVED AT ELEVATOR HOISTWAY COLUMNS WITH SURFACE-MOUNTED COVER PLATE AS SHOWN) WILL MEET AESS AS SPECIFIED.

FIELD BOLTS:			
PAINT:			
HOLES:			
ELECTRODES:	0	12/19/2019	FOR APPROVAL
BOLTS: U.N.O.	REV	DATE	DESCRIPTION

PARAMOUNT METAL & SUPPLY Co.
8140 E. ROSECRANS AVE., PARAMOUNT, CA 90723
TEL. (562) 634-8180
FAX (562) 634-1350

PROJECT: MID-COAST CORRIDOR TRANSIT PROJECT	DATE: 12/19/2019
	DRAWN: AP
CONTRACTOR: MID-COAST TRANSIT CONSTRUCTORS	CHECKED: DL
TITLE: SHELTER CANOPY TYPE 1,2,3 HANDHOLE REINFORCEMENT DETAIL	DRAWING No.: E7118
	JOBS No.: 471M

C:\TEM\VMS\FOR APPROVAL\E7118-HANDHOLE DETAIL-FOR TYPE 1-2-3.dwg, 1/3/2020 2:28:45 PM, DWG To PDF.pc3

MTS DOC NO. WOA355-AE-78

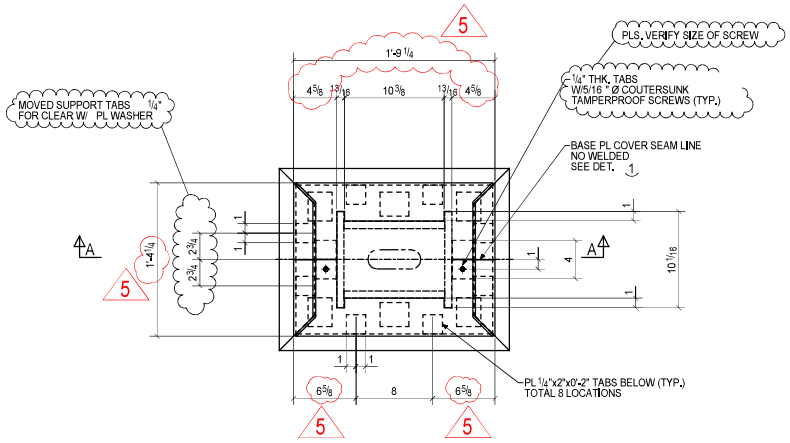

BASE PLATE COVER PLAN
SHELTER & VMS COLS. TYPE 1 & 2
REF. 1, 2 & 3/ AX074

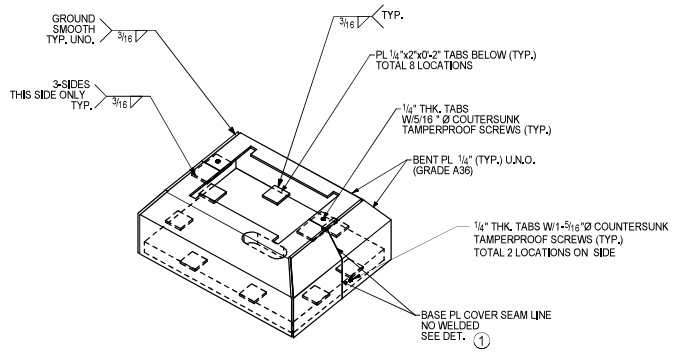

3D - VIEW

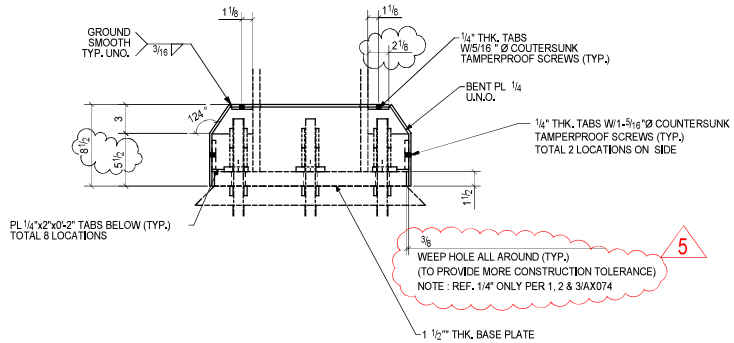

A - A

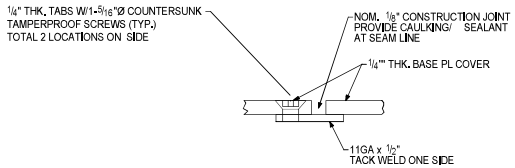

DET. 1

NOTE :

PROVIDE SELANT AT CONTACT POINTS BETWEEN COLUMN AND BASE PLATE COVER AS WELL AS AT SEAM LINES BETWEEN BASE PLATE COVERS.

FOR MATERIAL & SHOP FABRICATION SEE DWG. NO. E8100

CHECKER
PLEASE VERIFY
ALL CLOUDED AREA

FIELD BOLTS:	5	10/01/2019	UPDATE SEPTEMBER 2019
	4	09/25/2019	REV. PER RFI# 02345
PAINT:	3	09/25/2019	REV. PER RFI# 02226
HOLES:	2	09/25/2019	REV. PER SUBMITTAL# 03026-0 COMMENT
ELECTRODES:	0	01/11/2019	For Approval
BOLTS: U.N.O.	REV	DATE	DESCRIPTION

PARAMOUNT METAL & SUPPLY Co.
8140 E. ROSECRANS AVE., PARAMOUNT, CA 90723
TEL. (562) 634-8180
FAX (562) 634-1350

PROJECT MID-COAST CORRIDOR TRANSIT PROJECT	DATE: 12/17/2018
	DRAWN: AP
CONTRACTOR MID-COAST TRANSIT CONSTRUCTORS	CHECKED: DL
TITLE BASE PLATE COVER - TYPE1 & 2	DRAWING No.: E8117
MTS DOC. NO. 471 M	JOBS No.: 471 M

H:\471M-MCCT\TYPE 1,2&3(CAD)12-20-2019\72 - E8117.dwg, 12/20/2019 1:17:10 PM, DWG To PDF.pc3

VMS STATION KEY PLAN :

- VA MEDICAL CENTER STATION SHEET E1100
- NOBEL DRIVE STATION SHEET E2100
- BALBOA AVENUE STATION SHEET E3100
- VOIGT STATION SHEET E4100
- PEPPER STATION SHEET E5100
- EXECUTIVE DRIVE STATION SHEET E6100
- UTC TRANSIT CENTER STATION SHEET E7100
- CLAIREMONT DRIVE STATION SHTEET E8100
- TECOLOTE ROAD STATION SHEET E9100

FIELD BOLTS:			
PAINT:			
HOLES:			
ELECTRODES:	0	02/03/2020	For Approval
BOLTS: U.N.O.	REV	DATE	DESCRIPTION

PARAMOUNT METAL & SUPPLY Co.
8140 E. ROSECRANS AVE., PARAMOUNT, CA 90723
TEL. (562) 634-8180
FAX (562) 634-1350

PROJECT: MID-COAST CORRIDOR TRANSIT PROJECT	DATE: 02/03/2020
	DRAWN: AP
CONTRACTOR: MID-COAST TRANSIT CONSTRUCTORS	CHECKED: DL
TITLE: VMS STATION KEY PLAN	DRAWING No.: E0000
	JOB# No.: 471 M

MTS DOC NO. W0A335-A5-78

C:\TEM\VMS\FOR APPROVAL\VMS-LIST.dwg, 1/3/2020 3:51:28 PM, DWG To PDF.pc3

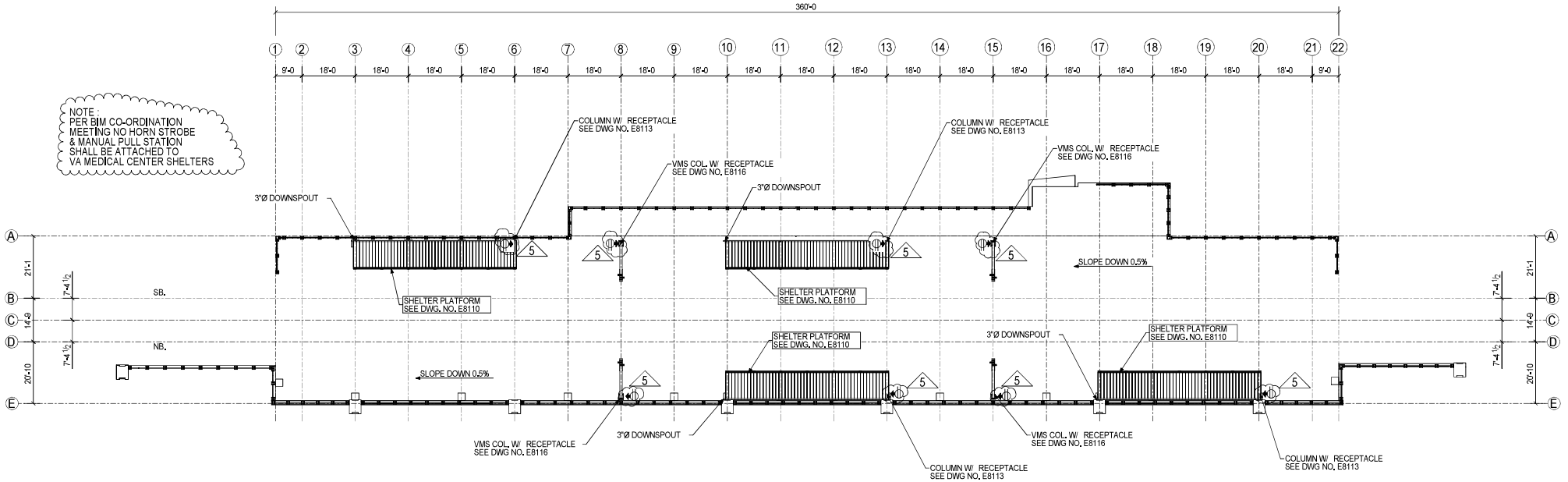

KEY PLAN PLATFORM LEVEL - SHELTER TYPE 2 & VMS

VA MEDICAL CENTER STATION

REF. 1/ AF501

DEVICES AT SHELTER & VMS ONLY		
LEGENDS : (FA DEVICES & MISC. ELEC. ITEM)	QTY	GRID LINE LOCATION
RECEPTACLE (ARROW SHOWS MOUNTING SIDE OF COLUMN)	8	A/6, A/8, A/13, A/15 E/8, E/13, E/15, E/20

NOT FOR CONSTRUCTION
PENDING BIM MODEL CO-ORDINATION (BY OTHERS)

FOR MATERIAL & SHOP FABRICATION SEE DWG. NO. E8100

FIELD BOLTS:	5	10/01/2019	UPDATE SEPTEMBER 2019
	4	09/25/2019	REV. PER RFI # 02345
PAINT:	3	09/25/2019	REV. PER RFI # 02226
HOLES:	2	09/25/2019	REV. PER SUBMITTAL# 03026-0 COMMENT
ELECTRODES:	0	01/11/2019	For Approval
BOLTS: U.N.O.	REV	DATE	DESCRIPTION

PARAMOUNT METAL & SUPPLY Co.
8140 E. ROSECRANS AVE., PARAMOUNT, CA 90723
TEL. (562) 634-8180
FAX (562) 634-1350

PROJECT: MID-COAST CORRIDOR TRANSIT PROJECT
DATE: 01/11/2019
DRAWN: AP
CONTRACTOR: MID-COAST TRANSIT CONSTRUCTORS
CHECKED: DL
TITLE: KEY PLAN - VA MEDICAL CENTER STATION
DRAWING No.: E1100
JOB# No.: 471 M
MTS DOC NO: W0A335-A5-79

H:\471M-MCCT\TYPE 1,2&3\CAD\1-07-2019\E1100.dwg, 10/10/2019 11:14:26 AM, DWG To PDF.pc3

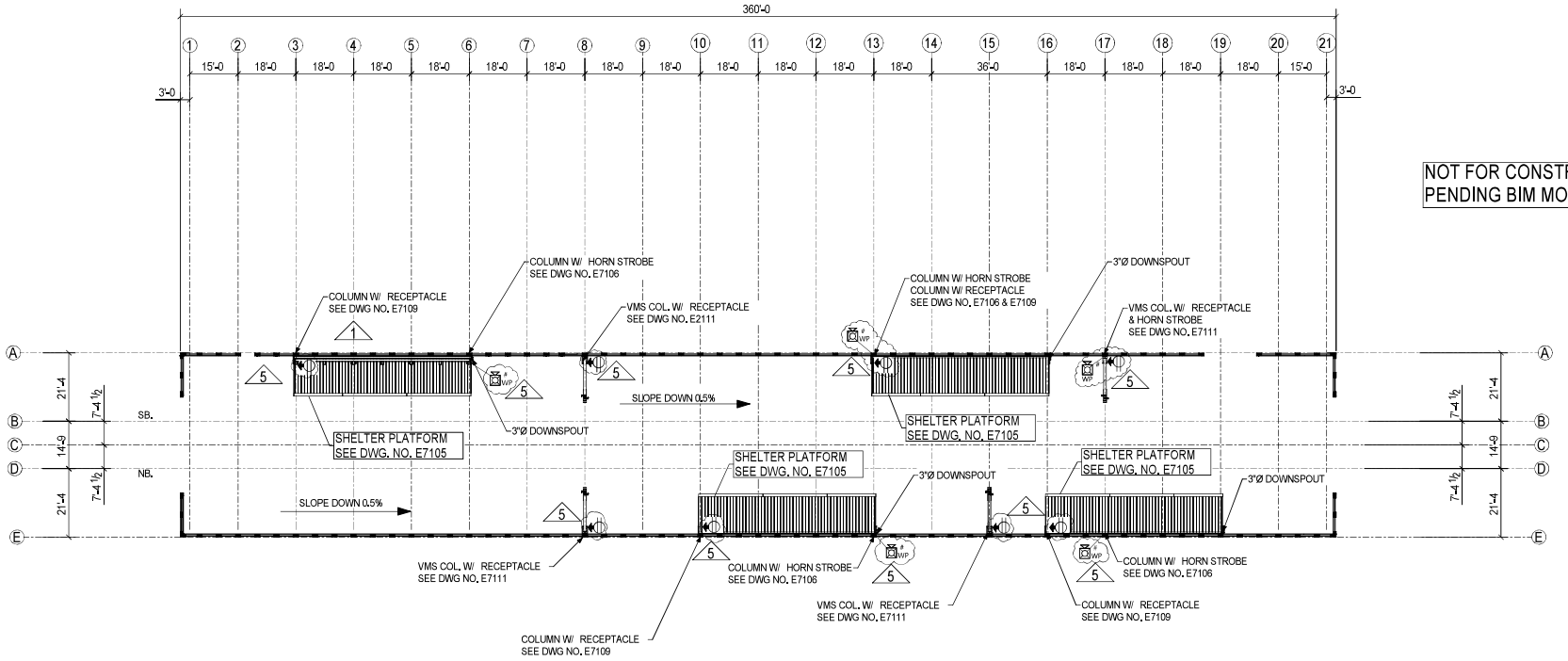

NOT FOR CONSTRUCTION
PENDING BIM MODEL CO-ORDINATION (BY OTHERS)

KEY PLAN PLATFORM LEVEL - SHELTER TYPE 3 & VMS

NOBEL DRIVE STATION

REF. 1/ AF402

DEVICES AT SHELTER & VMS ONLY		
LEGENDS : (FA DEVICES & MISC. ELEC. ITEM)	QTY	GRID LINE LOCATION
# WP WEATHERPROOF MULTI-CANDELA HORN/STROBE, WALL MOUNT, WHITE, FIRE, CLEAR LENS	5	A/6, A/13, A/17 E/13, E/17
F WP MANUAL PULL STATION, WEATHERPROOF ENCAPSULATED SUPERVISED IAM	-	
RECEPTACLE (ARROW SHOWS MOUNTING SIDE OF COLUMN)	8	A/3, A/8, A/13, A/17 E/8, E/10, E/15, E/16

NOTES :

1. ALL DEVICES & MISC. ELECTRICAL ITEMS SHALL BE PROVIDED AND FIELD INSTALLED BY OTHERS, TYP.
2. CHECKER, PLEASE VERIFY CUT-OUT SIZE & DEVICE MOUNTING DETAILS.

FOR MATERIAL & SHOP FABRICATION SEE DWG. NO. E8100

FIELD BOLTS:	5	10/01/2019	UPDATE SEPTEMBER 2019
	4	09/25/2019	REV. PER RFI # 02345
PAINT:	3	09/25/2019	REV. PER RFI # 02226
HOLES:	2	09/25/2019	REV. PER SUBMITTAL# 03026-0 COMMENT
ELECTRODES:	0	01/11/2019	For Approval
BOLTS: U.N.O.	REV	DATE	DESCRIPTION

PARAMOUNT METAL & SUPPLY Co.
8140 E. ROSECRANS AVE., PARAMOUNT, CA 90723
TEL. (562) 634-8180
FAX (562) 634-1350

PROJECT: MID-COAST CORRIDOR TRANSIT PROJECT
DATE: 01/11/2019
DRAWN: AP
CONTRACTOR: MID-COAST TRANSIT CONSTRUCTORS
CHECKED: DL
TITLE: KEY PLAN - NOBEL DRIVE STATION
DRAWING No.: E2100
JOB No.: 471 M

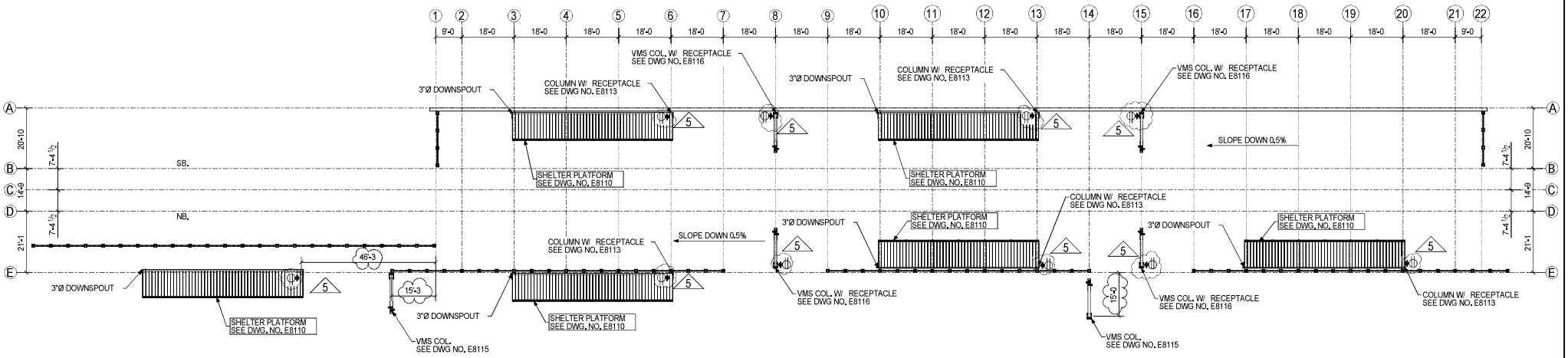

KEY PLAN PLATFORM LEVEL - SHELTER TYPE 2 & VMS

BALBOA AVENUE STATION

REF. 1/ AF310

NOT FOR CONSTRUCTION
PENDING BIM MODEL CO-ORDINATION (BY OTHERS)

5

DEVICES AT SHELTER & VMS ONLY		
LEGENDS : (FA DEVICES & MISC. ELEC. ITEM)	QTY	GRID LINE LOCATION
RECEPTACLE (ARROW SHOWS MOUNTING SIDE OF COLUMN)	10	A/6, A/8, A/13, A/15 E/0.1, E/6, E/8, E/13, E/15, E/20

FOR MATERIAL & SHOP FABRICATION SEE DWG. NO. E8100

REV	DATE	DESCRIPTION
5	10/01/2019	UPDATE SEPTEMBER 2019
4	09/25/2019	REV. PER RFI # 02345
3	09/25/2019	REV. PER RFI # 02226
2	09/25/2019	REV. PER SUBMITTAL# 03026-0 COMMENT
0	01/11/2019	For Approval

FIELD BOLTS:
PAINT:
HOLES:
ELECTRODES:
BOLTS: U.N.O.

PARAMOUNT METAL & SUPPLY Co.
8140 E. ROSECRANS AVE., PARAMOUNT, CA 90723
TEL. (562) 634-8180
FAX (562) 634-1350

PROJECT: MID-COAST CORRIDOR TRANSIT PROJECT
DATE: 01/11/2019
DRAWN: AP
CONTRACTOR: MID-COAST TRANSIT CONSTRUCTORS
CHECKED: DL
TITLE: KEY PLAN - BALBOA AVENUE STATION
DRAWING No.: E3100
JOB# No.: 471 M
MTS DOC NO. W0A335-A5-7a

H:\471M-MCCT\TYPE 1,2&3\CAD\1-D-07-2019\E3100.dwg 10/10/2019 11:16:05 AM, DWG To PDF.pc3

I. GENERAL NOTES :

(A) MATERIALS & SHOP FABRICATION NOTES :

1. ALL MATERIALS SHALL BE DOMESTIC / "BUY AMERICA" PER REF. SPECIFICATIONS, U.N.O.
2. ALL STRUCTURAL STEEL WIDE FLANGE MEMBERS SHALL CONFORM TO A992, GRADE 50, (UNO.)
3. ALL STRUCTURAL STEEL CHANNELS, ANGLES, AND OTHER SHALL CONFORM TO ASTM A36, (UNO.)
4. ALL STRUCTURAL STEEL PLATES AND BUILT-UP SECTIONS SHALL CONFORM TO ASTM A572, GRADE 50 (UNO.)
5. ALL STEEL HOLLOW STRUCTURAL SECTION (SQUARE AND RECTANGULAR): CONFORM TO ASTM A500, GRADE B (FY = 46 KSI) (UNO.)
6. ALL STEEL HOLLOW HOLLOW STRUCTURAL SECTION (ROUND): CONFORM TO ASTM A500, GRADE B (FY = 42 KSI).
7. ALL STEEL PIPE: CONFORM TO ASTM A53, TYPE S, GRADE B; GALVANIZED WHERE INDICATED, BLACK ELSEWHERE.
8. ALL SHOP & FIELD WELDING SHALL BE MADE IN CONFORMANCE WITH THE LATEST AWS D1.1 "STRUCTURAL WELDING CODE", U.N.O.
9. ALL STAINLESS STEEL WELDING SHALL BE MADE IN COMFORMANCE WITH THE LATEST D1.1 STRUCTURAL WELDING CODE/ D1.6 AS APPLICABLE.
10. FOR FABRICATION OF WORK WHICH WILL BE EXPOSED TO VIEW, COMPLY WITH AISC/ AESS AS APPLICABLE AND USE ONLY MATERIALS WHICH ARE SMOOTH AND FREE OF SURFACE BLEMISHES INCLUDING PITTING, RUST AND SCALE, SEAM MARKS, ROLLER MARKS, ROLLED TRADE NAMES, AND ROUGHNESS. REFER TO SECTION 55-4.02, ARCHITECTURALLY EXPOSED STRUCTURAL STEEL, FOR REQUIREMENTS FOR STRUCTURES AND ITEMS DEFINED AS AESS WORK IN THAT SECTION.
11. PARAMOUNT METAL&SUPPLY CO, HOLDS L.A. CITY TYPE I FABRICATOR LICENSE NO 1100 FOR MEDIUM WEIGHT, HIGH STRENGTH STEEL ALUMINUM & REBAR FABRICATION.

(B) FINISH NOTES :

4

1. ALL FABRICATED STEEL ITEMS SHALL BE SURFACE PREP. PER SSPC-SP10 NEAR WHITE BLAST AND PAINTED 3-COATS "CARBOLINE" HPC PAINT SYSTEM PER RFI NO. 1520
2. COMPLY WITH AESS-C " AS APPLICABLE PER RFI NO. 0226.

NOTE : SEE SEPARATE PAINT SYSTEM AND PQWP. PAINT QUALITY WORK PLAN SUBMITTALS.

(C) ANCHOR BOLT NOTES :

1. ALL ANCHOR BOLTS SHALL CONFORM TO " WFEC" (WILLIAMS FORM ENGINEERING CORP.) RE-BAR / HEX NUT.
NOTE : SEE SEPARATE ANCHOR BOLT/BASE PLATE SUBMITTAL FOR EACH STATION.

(D) SEPARATE SUBMITTALS

6

1. PLEASE SEE SEPARATE SUBMITTALS FOR FALL PROTECTION DETAILS, ALUMINUM RAFTER, POLYCABONATE ROOFING & RECTANGULAR GUTTER /DOWNSPOUT (BY OTHERS, U.N.O.)
2. ALUMINUM RAINWATER LEADER (BY OTHERS).
3. VMS COLUMNS AT UCSD STATIONS (VOIGT & PEPPER)

II. STATION KEY PLAN LEGEND : 2

- VOIGT DRIVE STATION SHEET E4100
- PEPPER CANYON SHEET E5100

6

DEVICES AT SHELTER & VMS ONLY		
LEGENDS : (FA DEVICES & MISC. ELEC. ITEM)	QTY	GRID LINE LOCATION
# WP WEATHERPROOF MULTI-CANDELA HORN/STROBE, WALL MOUNT, WHITE, FIRE, CLEAR LENS	6	A/5, A/9, A/13 E/9, E/13, E/17
F WP MANUAL PULL STATION, WEATHERPROOF ENCAPSULATED SUPERVISED IAM	1	A/11
RECEPTACLE	8	A/5, A/9, A/12, A/16 E/6, E/10, E/13, E/17

NOTES :

1. ALL DEVICES & MISC. ELECTRICAL ITEMS SHALL BE PROVIDED AND FIELD INSTALLED BY OTHERS, TYP.
2. CHECKER, PLEASE VERIFY CUT-OUT SIZE & DEVICE MOUNTING DETAILS.

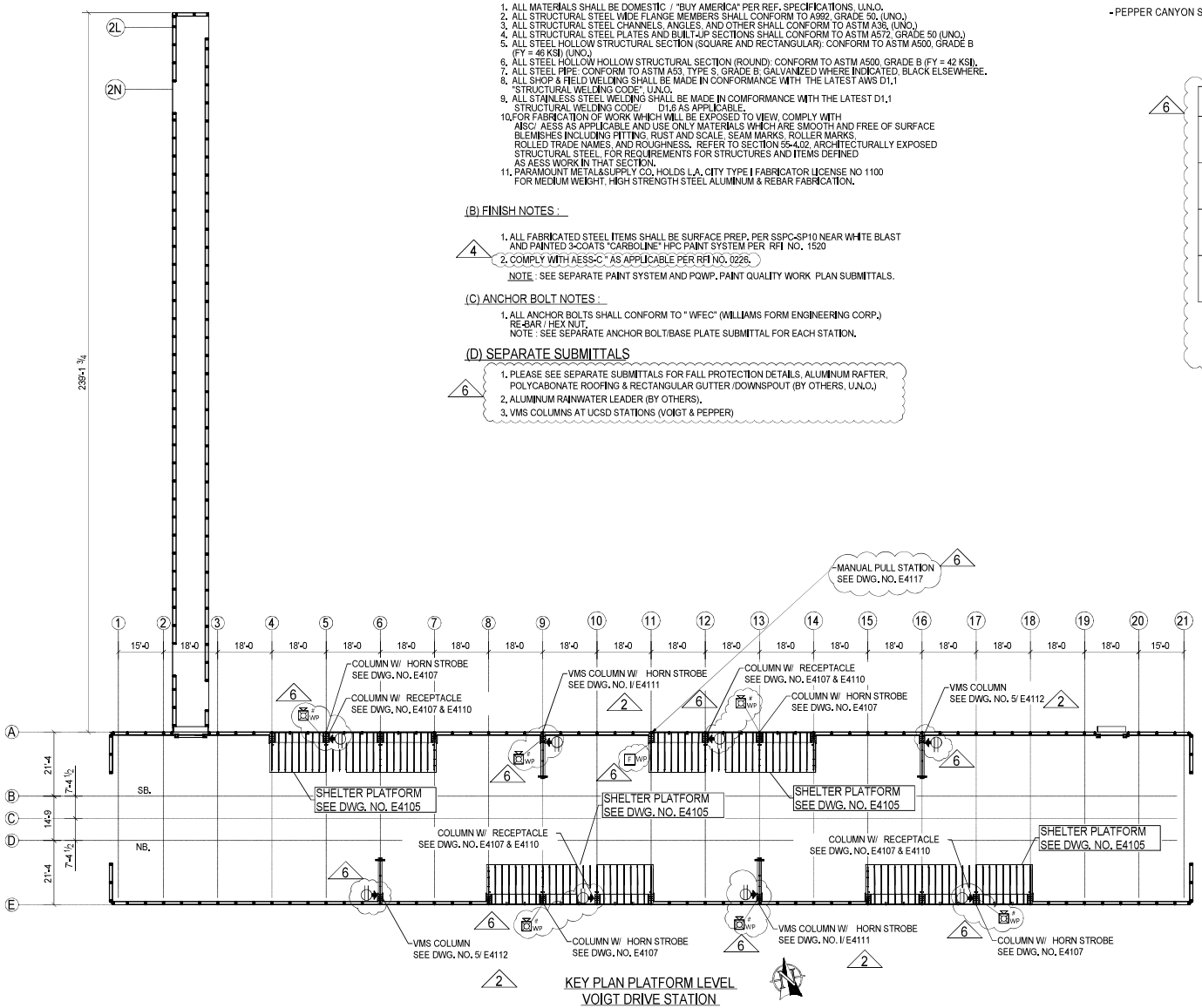

KEY PLAN PLATFORM LEVEL
VOIGT DRIVE STATION
REF. 1/ AF703

SHELTER TYPE 4 & VMS

NOT FOR CONSTRUCTION
PENDING BIM MODEL CO-ORDINATION (BY OTHERS)

CHECKER
PLEASE VERIFY
ALL CLOUDED AREA

REV	DATE	DESCRIPTION
6	08/05/2019	UPDATE JULY 2019
5	08/05/2019	REV. PER RFI # 02345
4	08/05/2019	REV. PER RFI # 02226
3	08/05/2019	REV. PER SUBMITTAL# 03272-0 COMMENT
2	01/28/2019	RE-SUBMITTED PER MARKUP ON 1/17/19
1	09/07/2018	RE-SUBMITTED PER MARKUP ON 6/20/18
0	06/20/2018	For Approval

FIELD BOLTS:
PAINT:
HOLES:
ELECTRODES:
BOLTS: U.N.O.

PARAMOUNT METAL & SUPPLY Co.
8140 E. ROSECRANS AVE., PARAMOUNT, CA 90723
TEL (562) 634-8180
FAX (562) 634-1350

PROJECT: MID-COAST CORRIDOR TRANSIT PROJECT
DATE: 01/18/2019
DRAWN: AP
CONTRACTOR: MID-COAST TRANSIT CONSTRUCTORS
CHECKED: DL
TITLE: TYPE 4 SHELTERS AND VMS COLUMNS / KEY PLAN - VOIGT DRIVE STATION
DRAWING No.: E4100
MTS JOB NO. W0471-MCCT
JOBS No.: 471 M

H:\471M-MCCT\VOIGT-03-06-2019\PlotFiles\REVISED PER SUBMITTAL# COMMENT 10-04-2019\E4100.dwg, 1/3/2020 3:05:07 PM, DWG To PDF.pc3

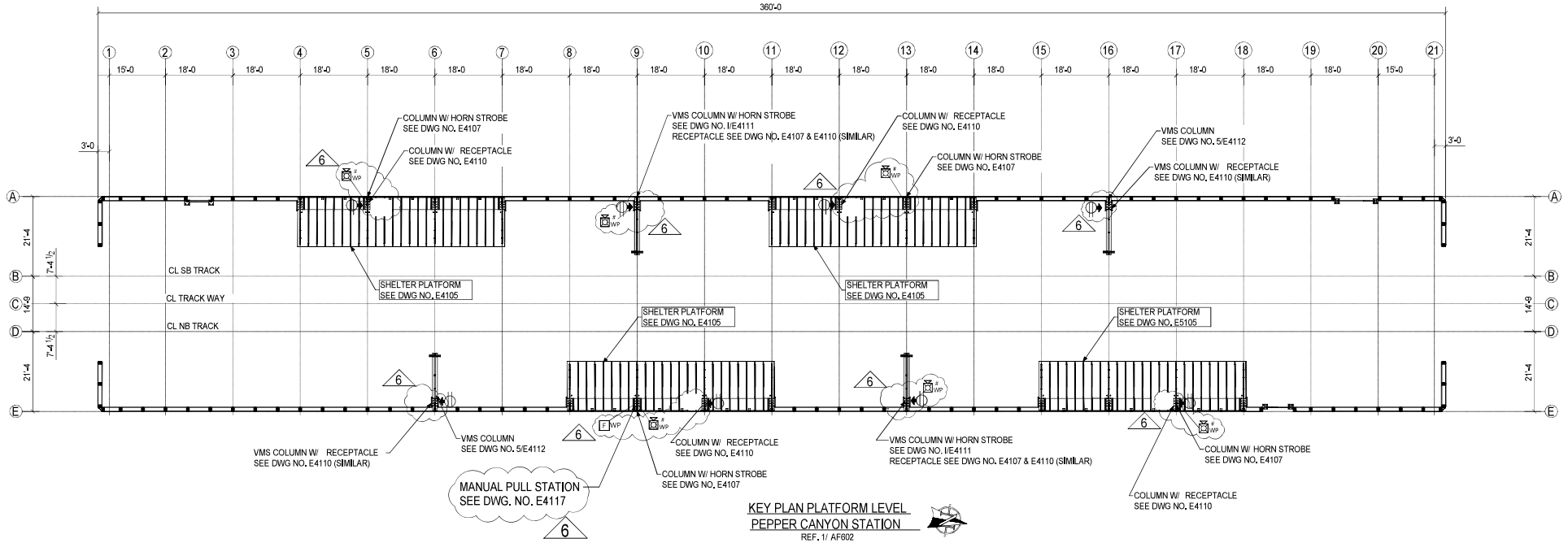

KEY PLAN PLATFORM LEVEL
PEPPER CANYON STATION
REF. 1/ AF602

SHELTER TYPE 4 & VMS

NOT FOR CONSTRUCTION
PENDING BIM MODEL CO-ORDINATION (BY OTHERS)

FOR MATERIAL & SHOP FABRICATION SEE DWG. NO. E4100

DEVICES AT SHELTER & VMS ONLY		
LEGENDS : (FA DEVICES & MISC. ELEC. ITEM)	QTY	GRID LINE LOCATION
# WP WEATHERPROOF MULTI-CANDELA HORN/STROBE, WALL MOUNT, WHITE, FIRE, CLEAR LENS	6	A/5, A/9, A/13 E/9, E/13, E/17
F WP MANUAL PULL STATION, WEATHERPROOF ENCAPSULATED SUPERVISED IAM	1	E/9
RECEPTACLE	8	A/5, A/9, A/12, A/16 E/6, E/10, E/13, E/17

NOTES :

1. ALL DEVICES & MISC. ELECTRICAL ITEMS SHALL BE PROVIDED AND FIELD INSTALLED BY OTHERS, TYP.
2. CHECKER, PLEASE VERIFY CUT-OUT SIZE & DEVICE MOUNTING DETAILS.

REV	DATE	DESCRIPTION
6	08/05/2019	UPDATE JULY 2019
5	08/05/2019	REV. PER RFI. # 02345
4	08/05/2019	REV. PER RFI. # 02226
3	08/05/2019	REV. PER SUBMITTAL# 03272-0 COMMENT
2	01/28/2019	RE-SUBMITTED PER MARKUP ON 1/17/19
1	09/07/2018	RE-SUBMITTED PER MARKUP ON 6/20/18
0	06/20/2018	For Approval

FIELD BOLTS:
PAINT:
HOLES:
ELECTRODES:
BOLTS: U.N.O.

PARAMOUNT METAL & SUPPLY Co.
8140 E. ROSECRANS AVE., PARAMOUNT, CA 90723
TEL. (562) 634-8180
FAX (562) 634-1350

PROJECT: MID-COAST CORRIDOR TRANSIT PROJECT
DATE: 01/21/2019
DRAWN: AP
CONTRACTOR: MID-COAST TRANSIT CONSTRUCTORS
CHECKED: DL
TITLE: KEY PLAN - PEPPER CANYON STATION
DRAWING No.: E5100
MTS PROJECT WORK ORDER No.: 471 M
JOBS No.:

H:\471M-MCCT\VOIGT-03-06-2019\PlotFiles\REVISED PER SUBMITTAL# COMMENT 10-04-2019\E5100.dwg, 1/3/2020 3:06:18 PM, DWG To PDF.pc3

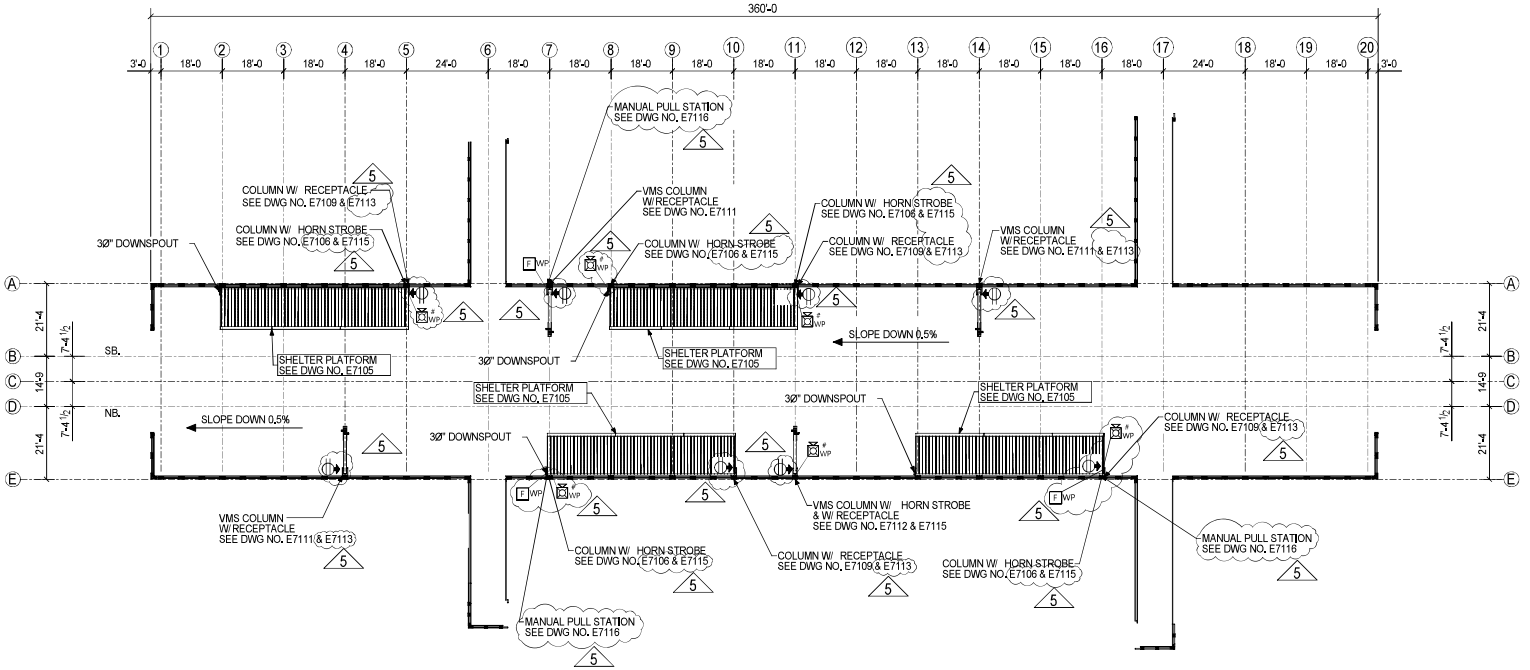

KEY PLAN PLATFORM LEVEL - SHELTER TYPE 3 & VMS

EXECUTIVE DRIVE STATION

REF. 1/ AF803

NOT FOR CONSTRUCTION
PENDING BIM MODEL CO-ORDINATION (BY OTHERS)

DEVICES AT SHELTER & VMS ONLY		
LEGENDS : (FA DEVICES & MISC. ELEC. ITEM)	QTY	GRID LINE LOCATION
# WP WEATHERPROOF MULTI-CANDELA HORN/STROBE, WALL MOUNT, WHITE, FIRE, CLEAR LENS	6	A/5, A/8, A/11 E/7, E/111, E/16
F WP MANUAL PULL STATION, WEATHERPROOF ENCAPSULATED SUPERVISED IAM	3	A/7, E7, E16
RECEPTACLE (ARROW SHOWS MOUNTING SIDE OF COLUMN)	8	A/5, A/7, A/11, A/14 E/4, E/10, E/11, E/16

NOTES :

1. ALL DEVICES & MISC. ELECTRICAL ITEMS SHALL BE PROVIDED AND FIELD INSTALLED BY OTHERS, TYP.
2. CHECKER, PLEASE VERIFY CUT-OUT SIZE & DEVICE MOUNTING DETAILS.

FOR MATERIAL & SHOP FABRICATION SEE DWG. NO. E8100

	REV	DATE	DESCRIPTION
FIELD BOLTS:	5	10/01/2019	UPDATE SEPTEMBER 2019
	4	09/25/2019	REV. PER RFI # 02345
PAINT:	3	09/25/2019	REV. PER RFI # 02226
HOLES:	2	09/25/2019	REV. PER SUBMITTAL# 03026-0 COMMENT
ELECTRODES:	0	01/11/2019	For Approval
BOLTS: U.N.O.			

PARAMOUNT METAL & SUPPLY Co.
8140 E. ROSECRANS AVE., PARAMOUNT, CA 90723
TEL. (562) 634-8180
FAX (562) 634-1350

PROJECT: MID-COAST CORRIDOR TRANSIT PROJECT
DATE: 01/11/2019
DRAWN: AP
CONTRACTOR: MID-COAST TRANSIT CONSTRUCTORS
CHECKED: DL
TITLE: KEY PLAN- EXECUTIVE DRIVE STATION
DRAWING No.: E6100
JOB# No.: 471 M
MTS DOC NO. W0A335-A5-79

H:\471M-MCCT\TYPE 1,2&3\CAD\1-D-07-2019\E6100.dwg, 10/10/2019 11:16:48 AM, DWG To PDF.pc3

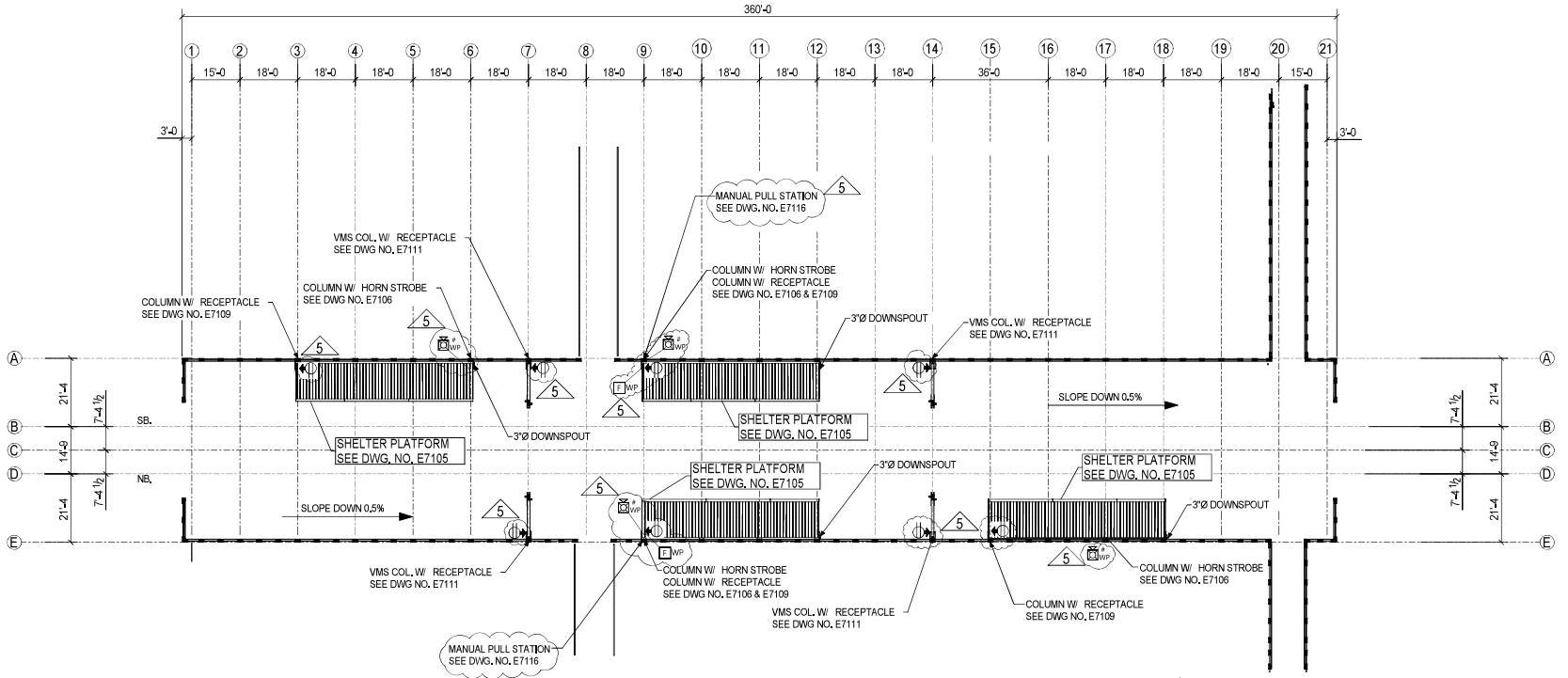

KEY PLAN PLATFORM LEVEL - SHELTER TYPE 3 & VMS

UTC STATION

REF. 1/ AF903

DEVICES AT SHELTER & VMS ONLY		
LEGENDS : (FA DEVICES & MISC. ELEC. ITEM)	QTY	GRID LINE LOCATION
# WP WEATHERPROOF MULTI-CANDELA HORN/STROBE, WALL MOUNT, WHITE, FIRE, CLEAR LENS	4	A/6, A/9 E/9, E/17
F WP MANUAL PULL STATION, WEATHERPROOF ENCAPSULATED SUPERVISED IAM	2	A/9, E9
RECEPTACLE (ARROW SHOWS MOUNTING SIDE OF COLUMN)	8	A/3, A/7, A/9, A/14 E/7, E/9, E/14, E/15

NOTES :

1. ALL DEVICES & MISC. ELECTRICAL ITEMS SHALL BE PROVIDED AND FIELD INSTALLED BY OTHERS, TYP.
2. CHECKER, PLEASE VERIFY CUT-OUT SIZE & DEVICE MOUNTING DETAILS.

NOT FOR CONSTRUCTION
PENDING BIM MODEL CO-ORDINATION (BY OTHERS)

FOR MATERIAL & SHOP FABRICATION SEE DWG. NO. E8100

REV	DATE	DESCRIPTION
5	10/01/2019	UPDATE SEPTEMBER 2019
4	09/25/2019	REV. PER RFI # 02345
3	09/25/2019	REV. PER RFI # 02226
2	09/25/2019	REV. PER SUBMITTAL# 03026-0 COMMENT
1	01/11/2019	Re-Submitted per Comment No. 02769-
0	09/17/2018	For Approval

FIELD BOLTS:
PAINT:
HOLES:
ELECTRODES:
BOLTS: U.N.O.

PARAMOUNT METAL & SUPPLY Co.
8140 E. ROSECRANS AVE., PARAMOUNT, CA 90723
TEL. (562) 634-8180
FAX (562) 634-1350

PROJECT: MID-COAST CORRIDOR TRANSIT PROJECT
CONTRACTOR: MID-COAST TRANSIT CONSTRUCTORS
TITLE: KEY PLAN - UTC STATION

DATE: 01/11/2019
DRAWN: AP
CHECKED: DL
DRAWING No.: E7100
JOB# No.: 471 M
MTS DOC NO: W0A335-A5-76

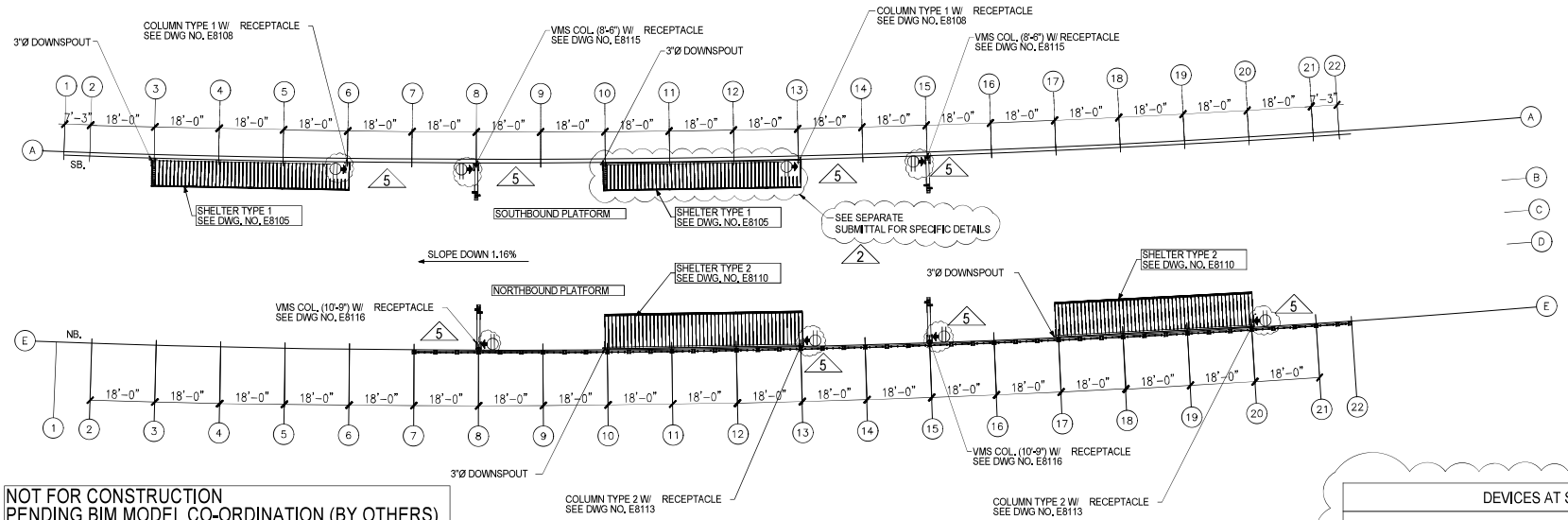

NOT FOR CONSTRUCTION
PENDING BIM MODEL CO-ORDINATION (BY OTHERS)

DEVICES AT SHELTER & VMS ONLY		
LEGENDS : (FA DEVICES & MISC. ELEC. ITEM)	QTY	GRID LINE LOCATION
RECEPTACLE (ARROW SHOWS MOUNTING SIDE OF COLUMN)	8	A/6, A/8, A/13, A/15 E/8, E/13, E/15, E/20

KEY PLAN PLATFORM LEVEL - SHELTER TYPE 1, 2 & VMS

CLAIREMONT DRIVE STATION

REF. AF210

I. GENERAL NOTES :

(A) MATERIALS & SHOP FABRICATION NOTES :

1. ALL MATERIALS SHALL BE DOMESTIC / "BUY AMERICA" PER REF. SPECIFICATIONS, U.N.O.
2. ALL STRUCTURAL STEEL WIDE FLANGE MEMBERS SHALL CONFORM TO A992, GRADE 50, (UNO.)
3. ALL STRUCTURAL STEEL CHANNELS, ANGLES, AND OTHER SHALL CONFORM TO ASTM A36, (UNO.)
4. ALL STRUCTURAL STEEL PLATES AND BUILT-UP SECTIONS SHALL CONFORM TO ASTM A572, GRADE 50 (UNO.)
5. ALL STEEL HOLLOW STRUCTURAL SECTION (SQUARE AND RECTANGULAR): CONFORM TO ASTM A500, GRADE B (FY = 46 KSI) (UNO.)
6. ALL STEEL HOLLOW HOLLOW STRUCTURAL SECTION (ROUND): CONFORM TO ASTM A500, GRADE B (FY = 42 KSI).
7. ALL STEEL PIPE: CONFORM TO ASTM A53, TYPE S, GRADE B; GALVANIZED WHERE INDICATED, BLACK ELSEWHERE.
8. ALL SHOP & FIELD WELDING SHALL BE MADE IN CONFORMANCE WITH THE LATEST AWS D1.1 "STRUCTURAL WELDING CODE", U.N.O.
9. ALL STAINLESS STEEL WELDING SHALL BE MADE IN COMFORMANCE WITH THE LATEST D1.1 STRUCTURAL WELDING CODE/ D1.6 AS APPLICABLE.
10. FOR FABRICATION OF WORK WHICH WILL BE EXPOSED TO VIEW, COMPLY WITH AISC/ AESS AS APPLICABLE AND USE ONLY MATERIALS WHICH ARE SMOOTH AND FREE OF SURFACE BLEMISHES INCLUDING PITTING, RUST AND SCALE, SEAM MARKS, ROLLER MARKS, ROLLED TRADE NAMES, AND ROUGHNESS. REFER TO SECTION 55-4.02, ARCHITECTURALLY EXPOSED STRUCTURAL STEEL, FOR REQUIREMENTS FOR STRUCTURES AND ITEMS DEFINED AS AESS WORK IN THAT SECTION.
11. PARAMOUNT METAL&SUPPLY CO. HOLDS L.A. CITY TYPE I FABRICATOR LICENSE NO 1100 FOR MEDIUM WEIGHT, HIGH STRENGTH STEEL ALUMINUM & REBAR FABRICATION.

(B) FINISH NOTES :

3
1. ALL FABRICATED STEEL ITEMS SHALL BE SURFACE PREP. PER SSPC-SP10 NEAR WHITE BLAST AND PAINTED 3-COATS "CARBOLINE" HPC PAINT SYSTEM PER RFI NO. 1520
2. COMPLY WITH AESS-C " AS APPLICABLE PER RFI NO. 0226.

NOTE : SEE SEPARATE PAINT SYSTEM AND PQWP. / PAINT QUALITY WORK PLAN SUBMITTALS.

(C.1) RESOLVED RFI ISSUES (INCORPORATION HERE IN)

1. CONDUIT ACCESS FOR ELECTRICAL ACCESS AT WEB PLATE BEAM QTY./
2. HANDHOLE ACCESS AT SHELTER & VMS COLUMN PENDING SIZE, QTY. & LOCATION (SEE DWG. NO. E8118)
3. ROUTING / MOUTING DETAILS OF LIGHT FIXTURES (BY OTHERS), (SEE DWG. NO. E8119)
4. HORN STROBE PENDING EAXCT DIMENSIONS , LOCATION CONNECT TO SHELTER & VMS COLUMN. (SEE DWG. NO. E7106 & E7111)
5. FA & MISC. FIXURES CUT OUT CONFIGURATION / EXACT LOCATION.

(C.2) PENDING RFI ISSUES (SEE SEPARATE SUBMITTAL)

1. EXACT POSITIONING OF VMS FIXTURE IN RELATION TO CANTILEVERED END OF VMS COLUMN. (SEE DWG. NO. E8115)
2. EXACT CONNECTION DETAILS OF VMS & CCTV FIXTURES AT VMS COLUMN. (SEE DWG. NO. E8115)
3. CCTV PENDING EAXCT DIMENSIONS / CONNECTION DETAILS TO VMS COLUMN. (SEE DWG. NO. E8115)

(D) ANCHOR BOLT NOTES :

1. ALL ANCHOR BOLTS SHALL CONFORM TO " WFEC" (WILLIAMS FORM ENGINEERING CORP.) , U.N.O.
   RE-BAR / HEX NUT.
   NOTE : SEE SEPARATE ANCHOR BOLT/BASE PLATE APPROVED SUBMITTAL FOR EACH STATION.

5
(E) SEPARATE SUBMITTAL

5
1. PLEASE SEE SEPARATE SUBMITTALS FOR BARRIER FENCE / FALL PROTECTION DETAILS, COMPOSITE ROOF DECKING (VERSA-DEK / STANDINGS SEAM) / FLASHING / CLOSURES/ DOWNSPOUT & RECTANGULAR GUTTER (BY OTHERS, U.N.O.)
2. ALUMINUM RAINWATER LEADER (BY OTHERS).
3. VMS COLUMNS AT NON-UCSD STATIONS (SIM. TYPE 1, 2 & 3)

II. SHELTER SCHEDULE

	TYPES	STATIONS	SLOPE %	SHELTER QUANTITIES			SIZES		REMARKS
				NORTHBOUND PLATFORM	SOUTHBOUND PLATFORM	BUS PLATFORM	WIDTH	LENGTH	
AT-GRADE	1	CLAIREMONT DRIVE	1.16%		2		6'-8"	54'-0"	NOTE : PER BIM CO-ORDINATION MEETING NO HORN STROBE & MANUAL PULL STATION SHALL BE ATTACHED TO AT-GRADE STATION COLUMNS.
AT-GRADE	2	CLAIREMONT DRIVE	1.16%	2			8'-8"	54'-0"	
AT-GRADE	2	TECOLOTE ROAD	0.5%	2	2		8'-8"	54'-0"	
AT-GRADE	2	BALBOA AVENUE	0.5%	2	2	2	8'-8"	54'-0"	
AT-GRADE	2	VA MEDICAL CENTER	0.5%	2	2		8'-8"	54'-0"	
AERIAL	3	UTC TRANSIT CENTER	0.5%	2	2		11'-3"	54'-0"	
AERIAL	3	EXECUTIVE DRIVE	0.5%	2	2		11'-3"	54'-0"	
AERIAL	3	NOBEL DRIVE	0.5%	2	2		11'-3"	54'-0"	
AERIAL	4	VOIGT DRIVE	1.5%	2	2		13'-4½"	54'-0"	
AERIAL	4	PEPPER CANYON	1.5%	2	2		13'-4½"	54'-0"	

III. VMS (WITHIN PLATFORM)

STATIONS	L=8'-6"	L=10'-9"	L=11'-3"	L=12'-3"	L=12'-9"	L=15'-3¾"
TECOLOTE ROAD	–	–	2	2	–	–
CLAIREMONT DRIVE	2	2	–	–	–	–
BALBOA AVENUE	–	–	–	4	–	–
NOBEL DRIVE	–	–	–	–	4	–
VA MEDICAL CENTER	–	–	–	4	–	–
PEPPER CANYON	–	–	–	–	–	4
VOIGT DRIVE	–	–	–	–	–	4
EXECUTIVE DRIVE	–	–	–	–	4	–
UTC TRANSIT CENTER	–	–	–	–	4	–

VMS (OFF PLATFORM)

STATIONS	L=6'-8"
TECOLOTE ROAD	3
CLAIREMONT DRIVE	–
BALBOA AVENUE	2
NOBEL DRIVE	–
VA MEDICAL CENTER	–
PEPPER CANYON	–
VOIGT DRIVE	–
EXECUTIVE DRIVE	–
UTC TRANSIT CENTER	–

IV. STATION KEY PLAN LEGEND :

- VA MEDICAL CENTER STATION SHEET E1100
- NOBEL DRIVE STATION SHEET E2100
- BALBOA AVENUE STATION SHEET E3100
- EXECUTIVE DRIVE STATION SHEET E6100
- UTC TRANSIT CENTER STATION SHEET E7100
- CLAIREMONT DRIVE STATION SHITEET E8100
- TECOLOTE ROAD STATION SHEET E9100

CHECKER
PLEASE VERIFY
ALL CLOUDED AREA

FIELD BOLTS:	5	10/01/2019	UPDATE SEPTEMBER 2019
	4	09/25/2019	REV. PER RFI # 02345
PAINT:	3	09/25/2019	REV. PER RFI # 02226
HOLES:	2	09/25/2019	REV. PER SUBMITTAL# 03026-0 COMMENT
ELECTRODES:	0	01/11/2019	For Approval
BOLTS: U.N.O.	REV	DATE	DESCRIPTION

PARAMOUNT METAL & SUPPLY Co.
8140 E. ROSECRANS AVE., PARAMOUNT, CA 90723
TEL. (562) 634-8180
FAX (562) 634-1350

PROJECT: MID-COAST CORRIDOR TRANSIT PROJECT
DATE: 11/09/2018
DRAWN: AP
CONTRACTOR: MID-COAST TRANSIT CONSTRUCTORS
CHECKED: DL
TITLE: TYPE 1, 2 & 3 SHELTERS AND VMS COLUMNS / KEY PLAN - CLAIREMONT DRIVE STATION
DRAWING No.: E8100
JOB# No.: 471 M
MTS DOC NO. W0A335-A5-7#

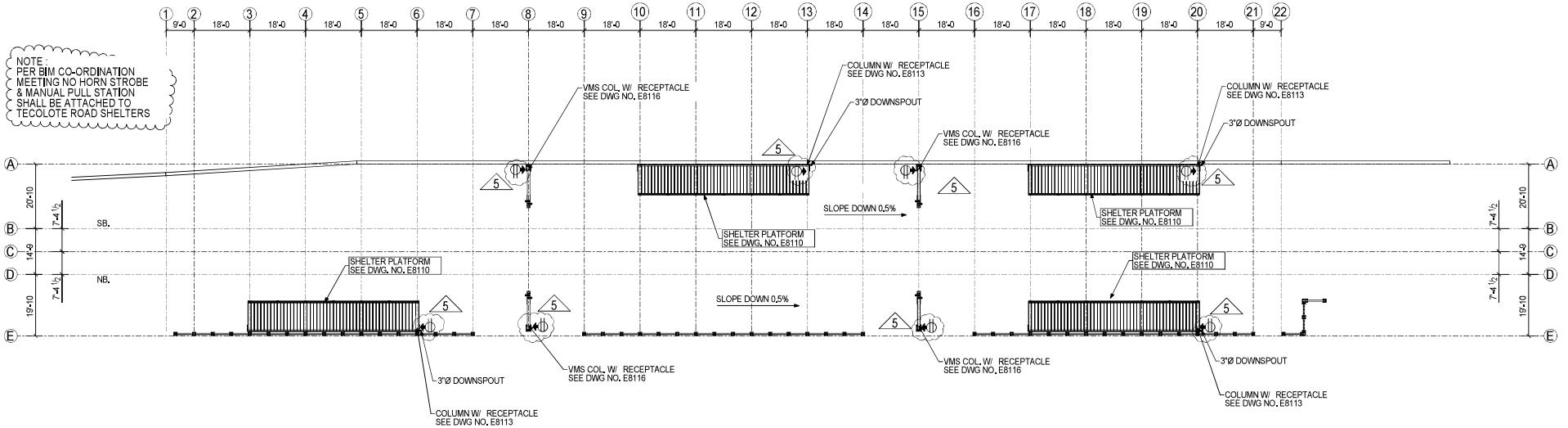

KEY PLAN PLATFORM LEVEL - SHELTER TYPE 2 & VMS

TECOLOTE ROAD STATION

REF. 1/ AF110

DEVICES AT SHELTER & VMS ONLY		
LEGENDS : (FA DEVICES & MISC. ELEC. ITEM)	QTY	GRID LINE LOCATION
RECEPTACLE (ARROW SHOWS MOUNTING SIDE OF COLUMN)	8	A/8, A/13, A/15, A/20 E/6, E/8, E/15, E/20

NOT FOR CONSTRUCTION
PENDING BIM MODEL CO-ORDINATION (BY OTHERS)

FOR MATERIAL & SHOP FABRICATION SEE DWG. NO. E8100

REV	DATE	DESCRIPTION
5	10/01/2019	UPDATE SEPTEMBER 2019
4	09/25/2019	REV. PER RFI # 02345
3	09/25/2019	REV. PER RFI # 02226
2	09/25/2019	REV. PER SUBMITTAL# 03026-0 COMMENT
0	01/11/2019	For Approval

FIELD BOLTS:
PAINT:
HOLES:
ELECTRODES:
BOLTS: U.N.O.

PARAMOUNT METAL & SUPPLY Co.
8140 E. ROSECRANS AVE., PARAMOUNT, CA 90723
TEL. (562) 634-8180
FAX (562) 634-1350

PROJECT: MID-COAST CORRIDOR TRANSIT PROJECT
CONTRACTOR: MID-COAST TRANSIT CONSTRUCTORS
TITLE: KEY PLAN-TECOLOTE ROAD STATION

DATE: 01/11/2019
DRAWN: AP
CHECKED: DL
DRAWING No.: E9100
JOB# No.: 471 M
MTS DOC NO. W0A335-A5-79

H:\471M-MCCT\TYPE 1,2&3\CAD\(1-07-2019)\E9100.dwg, 10/10/2019 11:19:36 AM, DWG To PDF.pc3

EXHIBIT C
MidCoast VMS Plan with Red Lines for Clearances and Vertical Placement - 2020.03.21

09/01/17

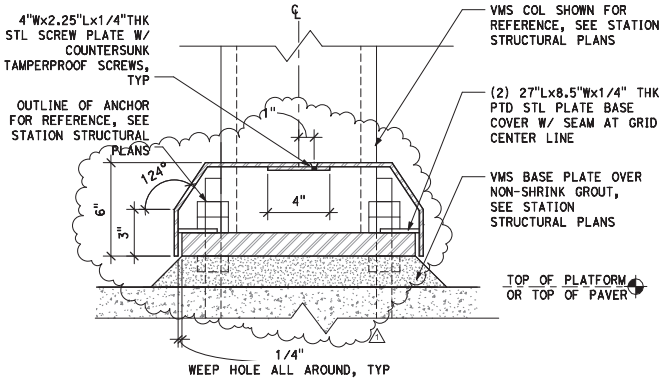

4 AX001 TYP VMS COLUMN TRANSVERSE SECTION
3" = 1'-0"

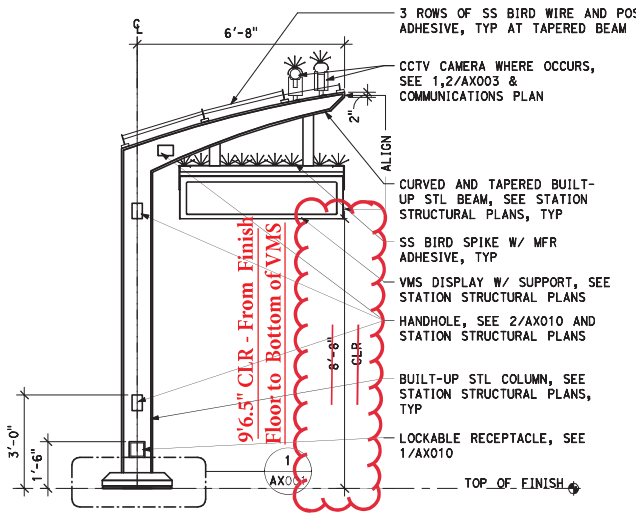

2 AX001 TYPICAL OFF-PLATFORM VMS ELEVATION
1/2" = 1'-0"

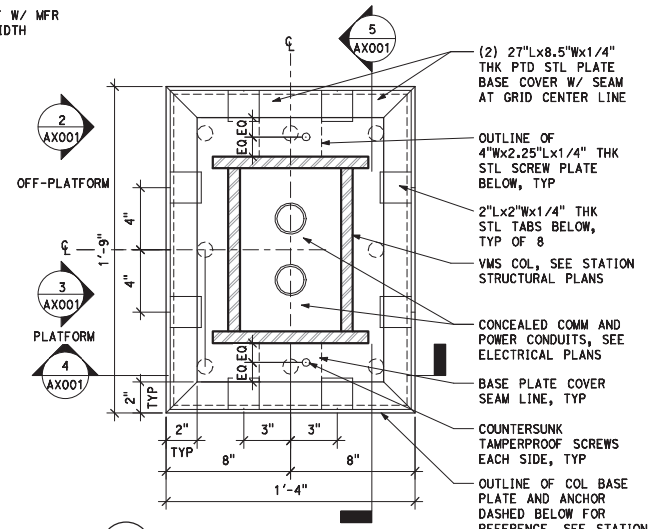

1 AX001 TYPICAL VMS COLUMN PLAN
3" = 1'-0"

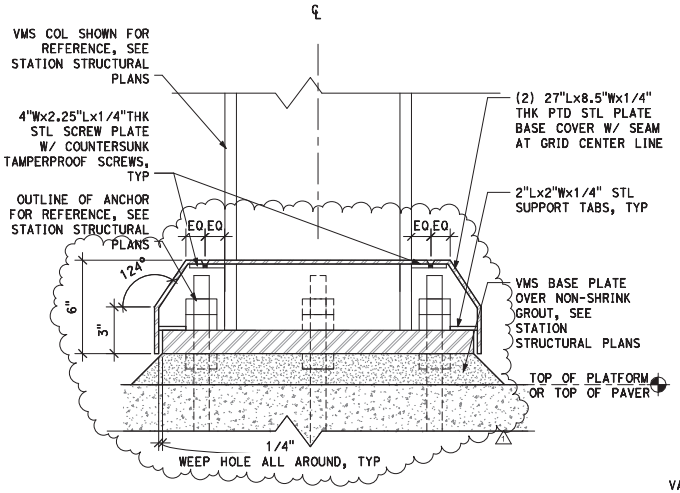

5 AX001 TYP VMS BASE PLATE LONGITUDINAL SECTION
3" = 1'-0"

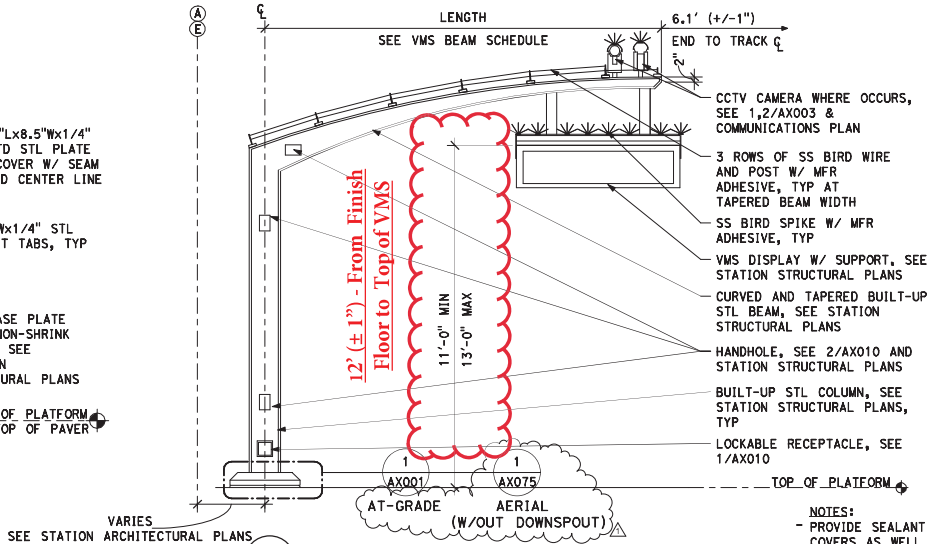

3 AX001 TYP PLATFORM VMS ELEVATION
1/2" = 1'-0"

VMS BEAM SCHEDULE		
STATION	PLATFORM	LENGTH
TECOLOTE ROAD	NORTHBOUND	11'-3"
	SOUTHBOUND	12'-3"
CLAIREMONT DRIVE	NORTHBOUND	10'-9"
	SOUTHBOUND	8'-6"
BALBOA AVE	NORTHBOUND	12'-3"
	SOUTHBOUND	12'-3"
NOBEL DRIVE	NORTHBOUND	12'-9"
	SOUTHBOUND	12'-9"
VA MEDICAL CENTER	NORTHBOUND	12'-3"
	SOUTHBOUND	12'-3"
EXECUTIVE DRIVE	NORTHBOUND	12'-9"
	SOUTHBOUND	12'-9"
UTC TRANSIT CENTER	NORTHBOUND	12'-9"
	SOUTHBOUND	12'-9"

NOTES:
- PROVIDE SEALANT AT CONTACT POINTS BETWEEN SHELTER COLUMNS AND BASE PLATE COVERS AS WELL AS AT SEAM LINES BETWEEN BASE PLATE COVERS
- PLATFORM VMS STRUCTURES SHALL BE VERTICAL TO THE PLATFORM FOR ALL STATIONS W/ THE EXCEPTIONS OF VOIGT DRIVE STATION AND PEPPER CANYON STATION.

No.	DATE	REVISION	BY	CHK	APRV
1	08/14/17	CCO #4531	DKC	HRS	FEO
0	9/22/16	ISSUED FOR CONSTRUCTION	NK	HRS	FEO

PARSONS BRINCKERHOFF
401 B STREET, SUITE 1650 SAN DIEGO, CA 92101
TEL (619) 338-9376 FAX (619) 338-8123

RELATIVE BORDER SCALE IS IN INCHES 0 1 2

LICENSED ARCHITECT JOHN JAY JACOBSEN C 22418 REN 06-30-19 STATE OF CALIFORNIA

DESIGNED BY	DATE
Jacobsen, J	9/16
DRAWN BY	
Huang, J	9/16
CHECKED BY	
Kovara, A	9/16
SANDAG 41	
Owsiany, F	9/16

SANDAG
401 B STREET, SUITE 800
SAN DIEGO, CA 92101-4231
(619) 699-1900

MID-COAST CORRIDOR TRANSIT PROJECT

MID-COAST CORRIDOR TRANSIT PROJECT
FINAL PLANS

ARCHITECTURAL PLANS
COMMON DRAWINGS
VMS SIGN COLUMN DETAILS

MTS DOC NO. WOA355-AE-78

SCALE: As indicated
SANDAG CONTRACT NO. 5008600.4
DRAWING NO. AX001
SHEET NO. 2955

EXHIBIT D
Shop_Drawing_NBSDM-460LC-125-SAN_(09-09-2020)

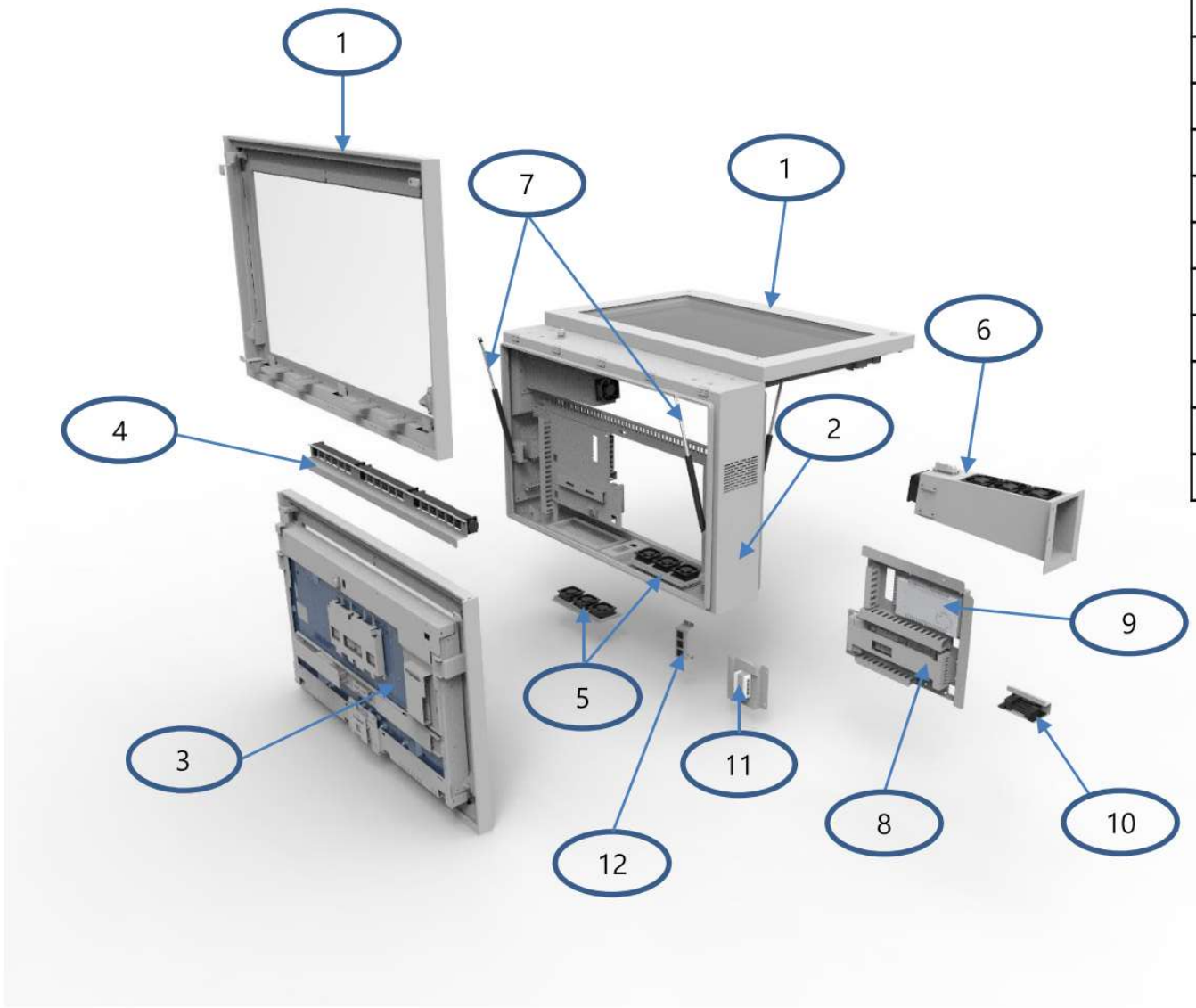

ITEM NO.	QTY.	DESCRIPTION
1	2	Door Assembly - Left/Right
2	1	Body Housing Assembly
3	2	LCD Panel Assembly
4	6	Scroll Fan Assembly
5	6	Air Intake Fan Assembly
6	8	Air Exhaust Fan Assembly
7	4	Shock Struts Gas Spring
8	2	Sign Control Board
9	2	Power Board
10	1	Heater Assembly
11	1	Networking Router
12	1	Power Strip

MODEL NAME

NBSDM-460LC-125-SAN

PART NAME

Components explode drawing

DATE 09-09-2020

-Explode drawing of 46" sign components

Prepared By:
Compliance@nanovdisplay.com

Copyright © 2021 Nanov Display Inc. All rights reserved. CONFIDENTIAL. Not for redistribution purposes.

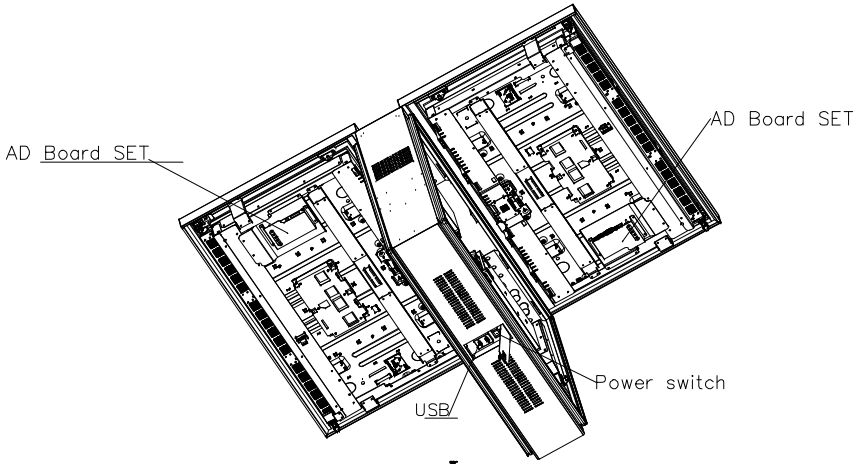

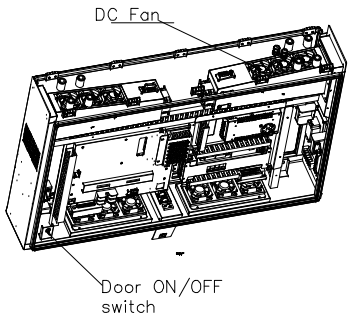

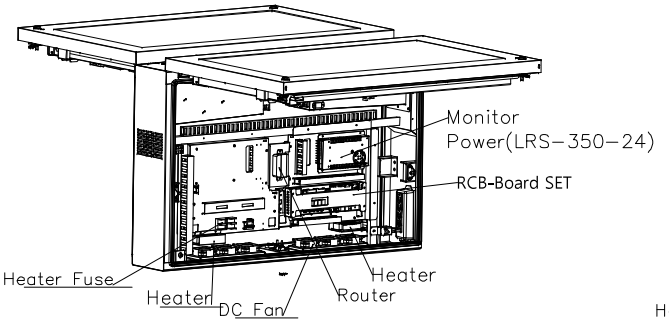

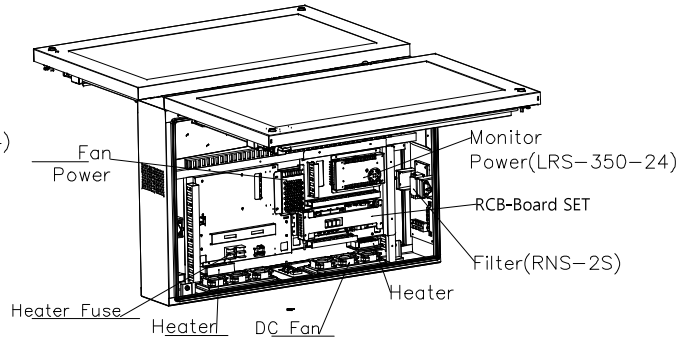

MODEL NAME

NBSDM-460LC-125-SAN

PART NAME

Components Layout

DATE	MATERIAL
June 5, 2019	
Q'TY	SCALE

FILE NUMBER

CONTACT

compliance@nanovdisplay.com

NANOV Display Inc.

* NOTE

- 46 inches San Diego LCD Monitor Component Layout
- Input Port Location
- Fans Location
- AD Board and RCB Board Location

Copyright © 2021 Nanov Display Inc. All rights reserved. CONFIDENTIAL. Not for redistribution purposes.

NANOV Display Inc.

Concept Drawing
Model Name: NBSDM-460LC-125-SAN



Copyright © 2021 Nanov Display Inc. All rights reserved. CONFIDENTIAL. Not for redistribution purposes.

Cable Grand



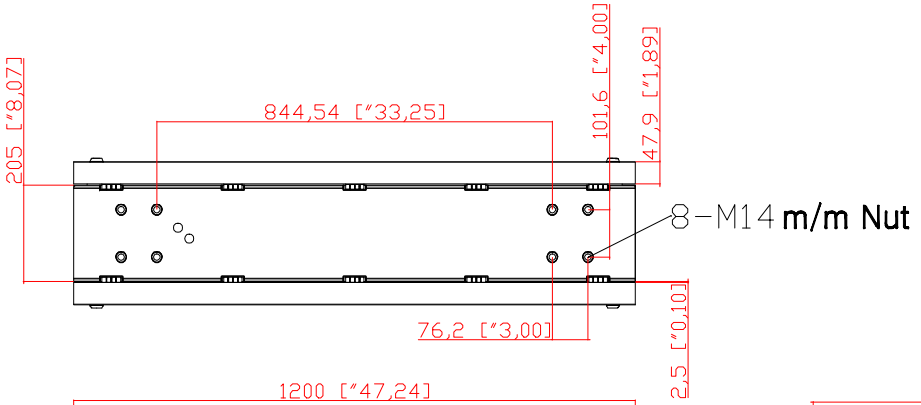

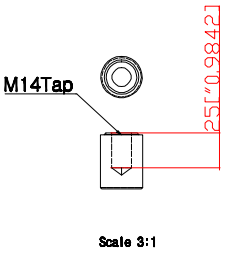

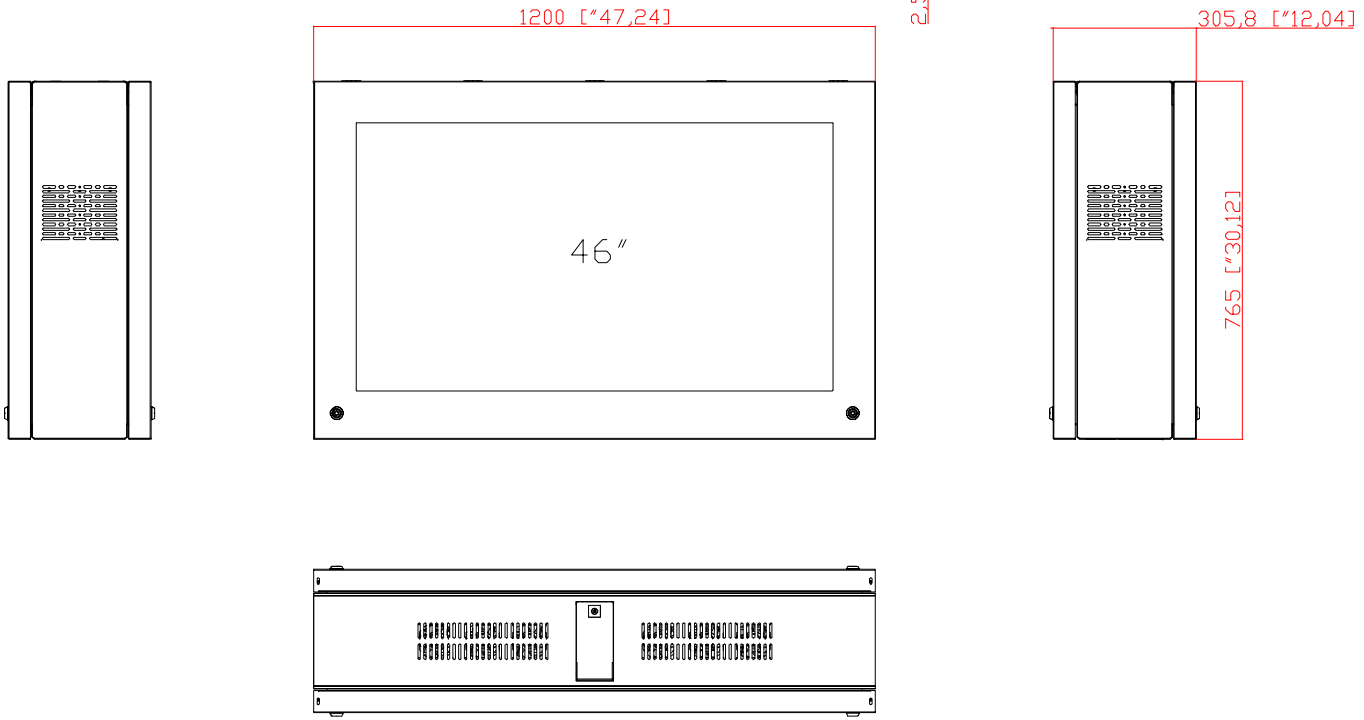

MODEL NAME	NBSDM-460LC-125-SAN
PART NAME	46" VMS Dimensions
DATE: 09-09-2020	MATERIAL:
QTY:	SCALE:
UNIT:	REV.:
REMARK:	

-Cable grand, top view, and bottom view

-M14 Depth 25 mm. Bolt Size

-PG21 Cable Grand

-Cable Grand Connection

Prepared By:
Compliance@nanovdisplay.com

Copyright © 2021 Nanov Display Inc. All rights reserved. CONFIDENTIAL. Not for redistribution purposes.

Cable Gland Specifications:
Model No. BC-PG11G
Thread AG: PG11
Cable (mm): 5-10
H (mm): 25
GL (mm): 8
Wrench (mm): 21

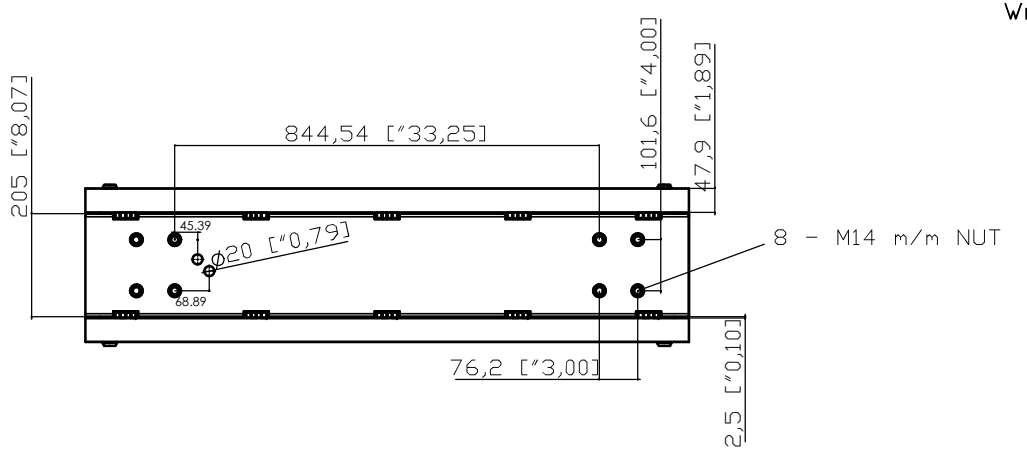

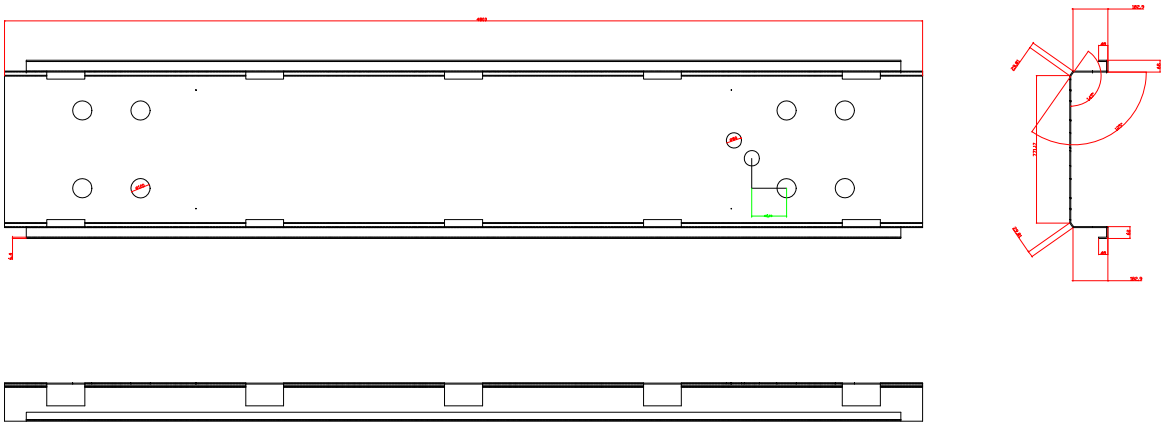

1.6T SET/1EA

MODEL NAME	NBSDM-460LC-125-SAN
PART NAME	Dimension Drawing
DATE	11-25-2020
MATERIAL	
Q'TY	
SCALE	
UNIT	
REV.	
REMARK	

NANOV Display Inc.

I/O Ports and Mounting Holes drawing as requested by SDMTS

Prepared by:
KiaraB@nanovdisplay.com

Copyright ©2020 Nanov Display Inc. All rights reserved.
CONFIDENTIAL. Not for redistribution purposes.

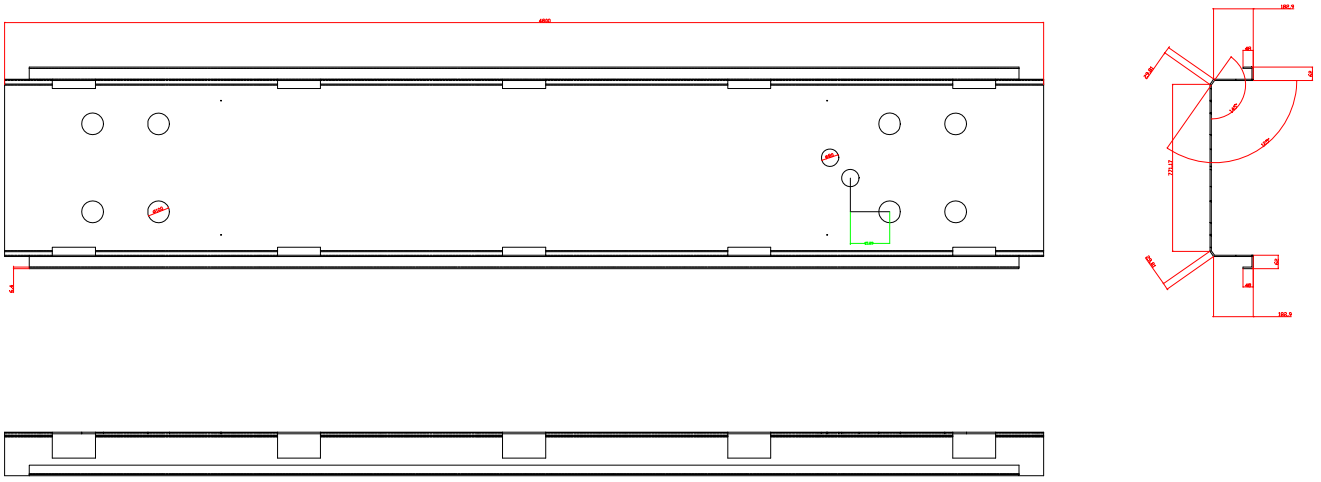

1.6T SET/1EA

MODEL NAME	NBSDM-460LC-125-SAN
PART NAME	Enclosure Top
DATE	07-02-2021
MATERIAL	
Q'TY	
SCALE	
UNIT	
REV.	
REMARK	

NANOV Display Inc.

46" Double-Sided VMS Enclosure Top Dimensions showing cable grand to mounting bolt distance

Copyright © 2021 Nanov Display Inc. All rights reserved. CONFIDENTIAL. Not for redistribution purposes.

MTS DOC NO. WOA355-AE-78

Prepared By:
KiaraB@nanovdisplay.com

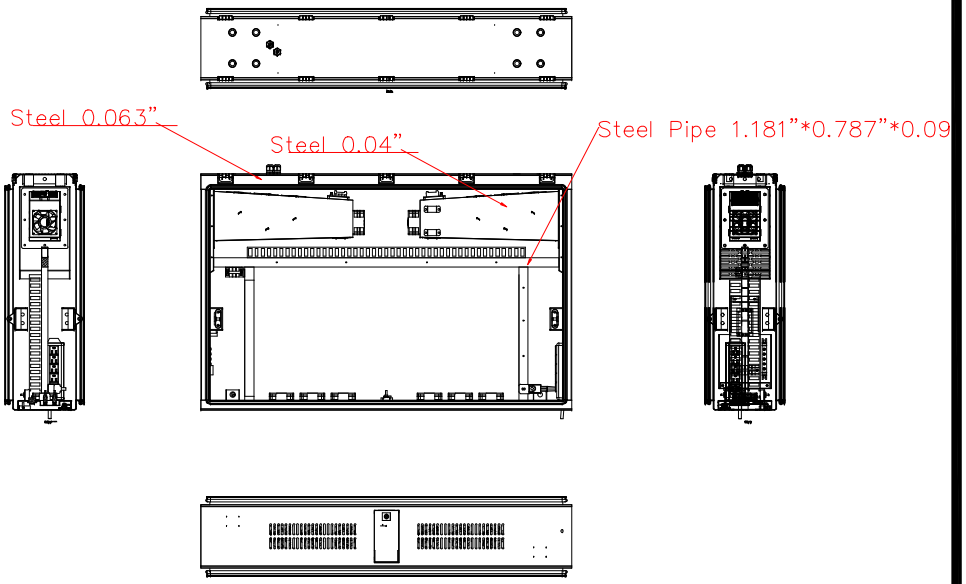

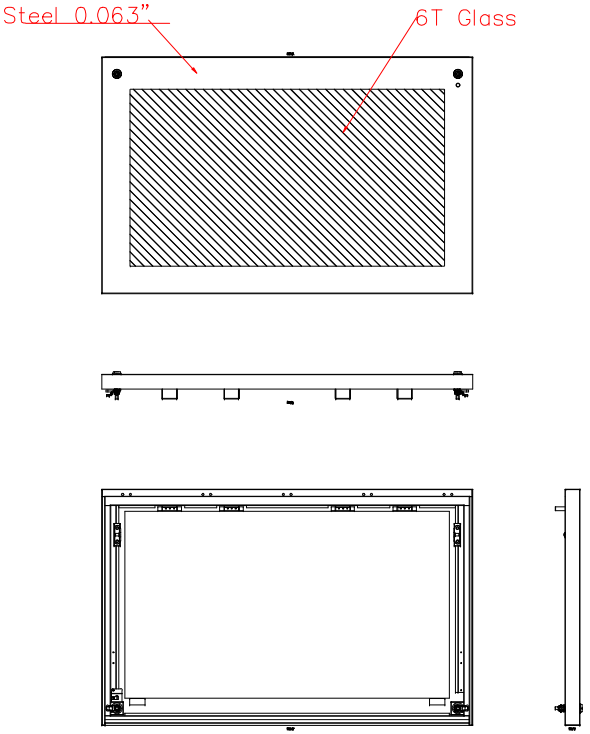

MODEL NAME	NBSDM-460LC-125-SAN
PART NAME	Materials Layout
DATE	June 5, 2019
MATERIAL	
Q'TY	
SCALE	
FILE NUMBER	
CONTACT	compliance@nanovdisplay.com

NANOV Display Inc.

* NOTE
- 46 inches LCD Monitor Materials

Copyright © 2021 Nanov Display Inc. All rights reserved. CONFIDENTIAL. Not for redistribution purposes.

MTS DOC NO. WOA355-AE-78

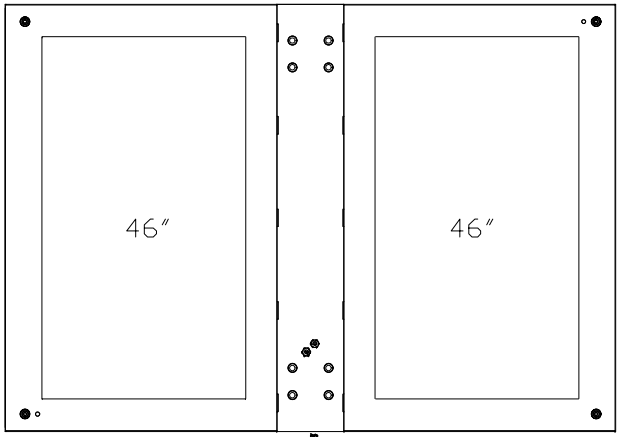

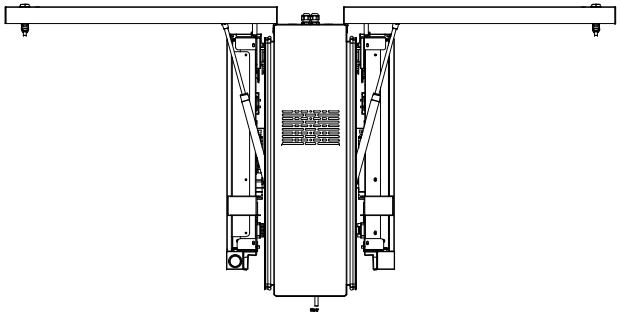

STEP1 (Door Open)

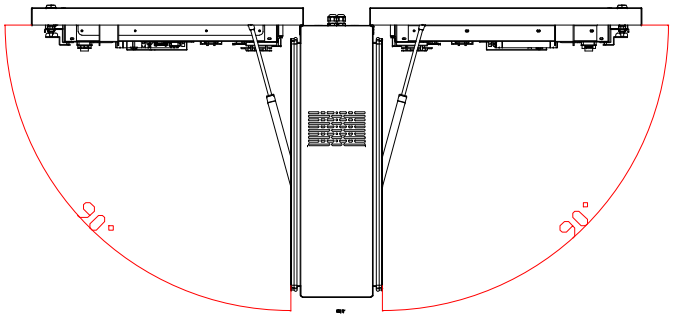

STEP2 (Panel Open)

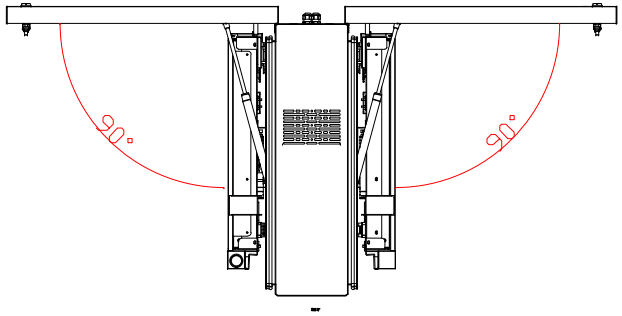

MODEL NAME

NBSDM-460LC-125-SAN

PART NAME

Opening Door

DATE	MATERIAL
Q'TY	SCALE

FILE NUMBER

0-460LHC-SAN-05062019

CONTACT

compliance@nanovdisplay.com

NANOV Display Inc.

* NOTE

- 46 inches LCD Monitor Door Opening (Step 1)
- 46 inches LCD Monitor Panel Opening (Step 2)
- 90 Degrees Opening Door Angle

Copyright © 2021 Nanov Display Inc. All rights reserved. CONFIDENTIAL. Not for redistribution purposes.

MTS DOC NO. WOA355-AE-78

EXHIBIT E
01_G4200075_v4 - 42 in Stretch Display

G4200075

Technical Specifications

PANEL

Active Display Area	42'' (1040 x 260 mm)
Backlight	LED
Resolution	1920 x 480 px
Pixel Pitch (mm)	0.54 mm (H) x 0.54 mm (V)
Brightness	1500 cd/m² (Typ)
Contrast Ratio	4000:1
Viewing Angle	178° (H) 178° (V)
Display Colours	16.7 Million colours (Max)



CONNECTIVITY

Video	LVDS
Power Consumption	290 W (Max)
Power Input	110 - 240 VAC, 50/60 Hz
External Controls	USB
Diagnostic	Diagnostic parameters managed through SNMP GDS subagent: LCD screen state, internal temperature - humidity level control, vibration sensor, internal heater state, fan state and speed control, ambient light and LCD backlight control

MECHANICAL STRUCTURE

Dimensions (W-H-D)	1105,03 x 436 x 250,9 mm
Weight	50 Kg
Protective Glass	Monolithic toughned glass with Glass Housing IK-08 of damage protection and optical enhancement G+Bond
Operating Temperature	-25°C to +45°C (-13 °F to +113 °F)
Storage Temperature	-25°C to +60°C (-13 °F to +140 °F)

SPECIAL FEATURES

Special Features	MTBF 50000 hours
IP Class	IP65

EMBEDDED PC

Processor	Fanless Intel Celeron 6305E thin mini ITX
Memory	8GB DDR4, 256GB SSD

CERTIFICATION

UL / FCC

ACCESSORIES

Wi-fi antenna

EXHIBIT F
03_SF082_42_SS_P00 - Sheet1

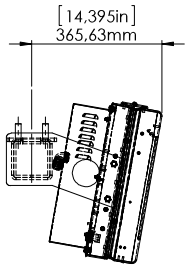

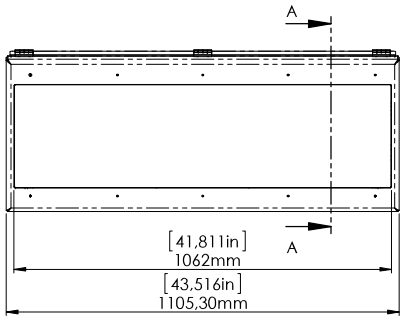

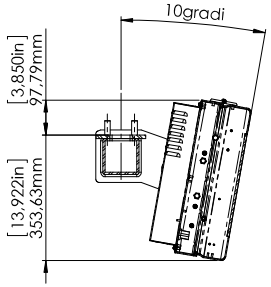

SEZIONE A-A

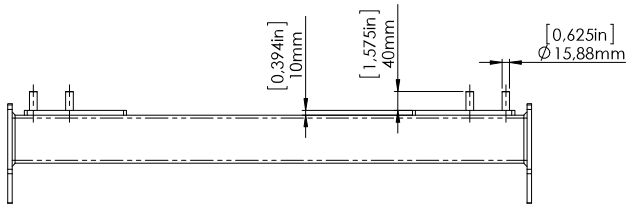

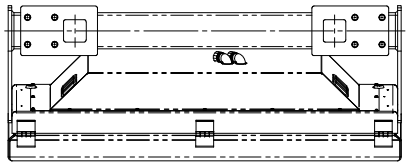

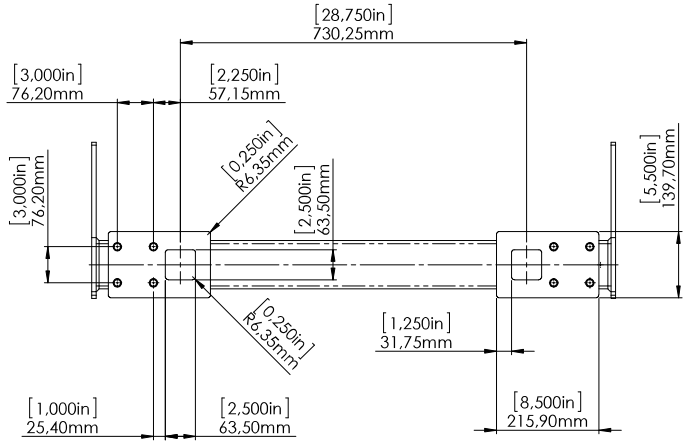

1:7.5

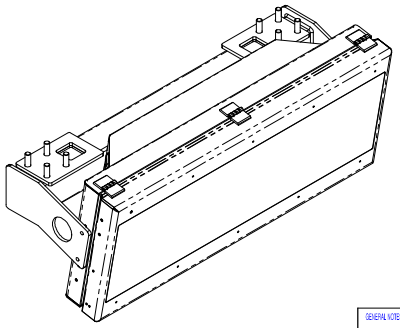

GENERAL NOTES

1 - REMOVE ALL SHARP EDGES AND BURRS
2 - PAY ATTENTION TO THE INSERTION SIDE OF THE SELF CLINCHING INSERTS
3 - FOLLOW THE MANUFACTURER INSTRUCTION TO ASSEMBLE THE SELF CLINCHING INSERTS IN THE RIGHT WAY
4 - WHEN NOT AVAILABLE THE REQUESTED INSERTS USE ACCESSORIES WITH EQUIVALENT OR BETTER SPECIFICATIONS
5 - THE PIECE HAS TO BE DELIVERED CLEAN
6 - PACK THE PIECES IN THE WAY TO NOT COMPROMISE THEIR MECHANICAL AND AESTHETIC SPECIFICATION

APPROVALS DIRECTIVES

RoHS - THE PART HAS TO BE RoHS COMPLIANT

REACH
The part has to comply with European REACH regulation 1907/2006 and must not contain SVHC substances listed on the Candidate List that are more than 0,1% w/w.
No SVHC content is preferable.

TOLERANCES FOR MACHINERY

TOL.FOR MACH. TOOL	TOL. FOR	DIM.mm	1 - 18	18-80	80-400	OVER 400
JS13	LASER & PUNCH	SCOS.mm	± 0.1	±0.2	±0.3	± 0.5
UNI EN 20286/2	TOL. FOR	DIM.mm	1 - 150	OVER 150	ANG. 360°	
	PRESS BENDING	SCOS.mm	±0.2	± 0.4	±1°	

TOLERANCES FOR CARPENTRY

DIM.mm	UNTIL 30	30-120	120-630	630-2000	OVER 2000
SCOS.mm	± 0,5	±1	± 1,5	±2	3±
SHAPE TOL. DIM.mm	UNTIL 300	300-1000	1000-2000	OVER 2000	
SCOS.mm	0.5	1	2	3	

54

GDS GLOBAL DISPLAY SOLUTIONS

PROJECT	TENDER MTS - SF082_42_DS					
TITLE						
MATERIAL & FINISH						
APPROVED BY	GDS- P.MBR	SCALE	1:10	DATE	25/01/2023	PART NUMBER SF082_42_SS_P00	REV	REV DATE
DESIGNED BY	Licciardo H.P.	DIMENSION	mm	SHEET	1 / 1	PART	PART REV
DRAWN BY	Licciardo H.P.	A2				FILE NAME SF082_42_SS_P00.PDF	

Questo disegno è proprietà esclusiva di GDS. È vietato riprodurlo o distribuirlo a terzi senza l'approvazione scritta di GDS. - This drawing is an exclusive property of GDS. It is not permitted to distribute it to third parties without GDS written permission.

MTS DOC NO WOA355-AE-78

EXHIBIT G
04_SF082_42_DS_P00 - Sheet1

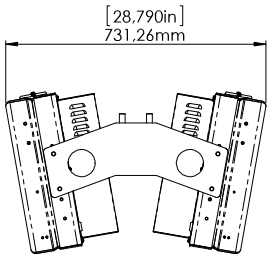

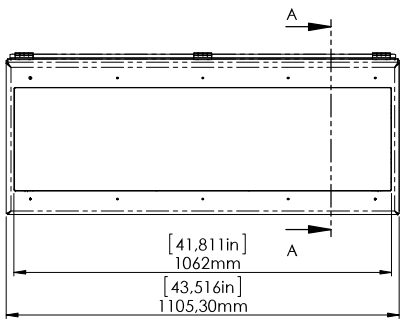

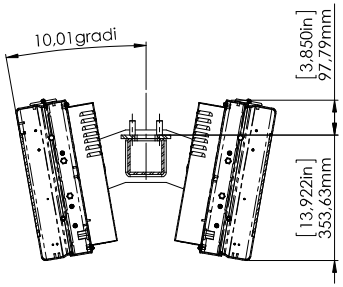

SEZIONE A-A

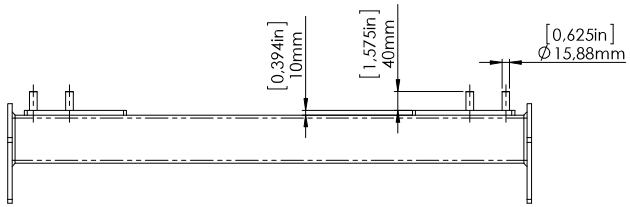

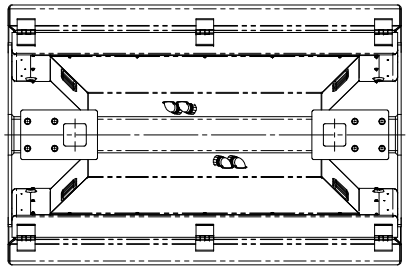

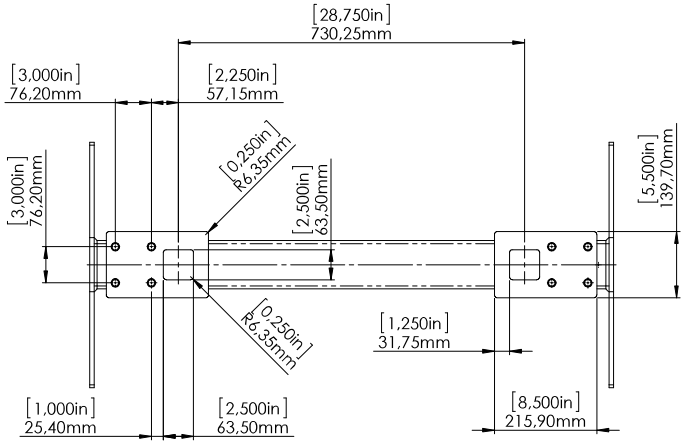

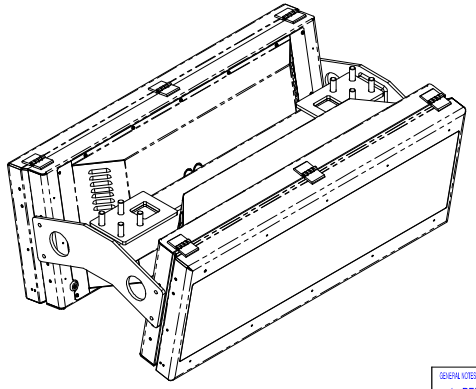

GENERAL NOTES
1 - REMOVE ALL SHARP EDGES AND BURRS
2 - PAY ATTENTION TO THE INSERTION SIDE OF THE SELF CLINCHING INSERTS
3 - FOLLOW THE MANUFACTURER INSTRUCTION TO ASSEMBLE THE SELF CLINCHING INSERTS IN THE RIGHT WAY
4 - WHEN NOT AVAILABLE THE REQUESTED INSERTS USE ACCESSORIES WITH EQUIVALENT OR BETTER SPECIFICATIONS
5 - THE PIECE HAS TO BE DELIVERED CLEAN
6 - PACK THE PIECES IN THE WAY TO NOT COMPROMISE THEIR MECHANICAL AND AESTHETIC SPECIFICATION

APPROVALS DIRECTIVES
RoHS - THE PART HAS TO BE RoHS COMPLIANT
REACH
The part has to comply with European REACH regulation 1907/2006 and must not contain SVHC substances listed on the Candidate List that are more than 0,1% w/w.
No SVHC content is preferable.

TOLERANCES FOR MACHINERY

TOL.FOR MACH. TOOL	TOL. FOR	DIM.mm	1 - 18	18-80	80-400	OVER 400
JS13	LASER & PUNCH	SCOS.mm	± 0.1	±0.2	±0.3	± 0.5
UNI EN 20286/2	TOL. FOR	DIM.mm	1 - 150	OVER 150	ANG. 360°	
	PRESS BENDING	SCOS.mm	±0.2	± 0.4	±1°	

TOLERANCES FOR CARPENTRY

DIM.mm	UNTIL 30	30-120	120-630	630-2000	OVER 2000
SCOS.mm	± 0,5	±1	± 1,5	±2	±±
SHAPE TOL.	DIM.mm	UNTIL 300	300-1000	1000-2000	OVER 2000
	SCOS.mm	0.5	1	2	3

GDS GLOBAL DISPLAY SOLUTIONS

PROJECT	TENDER MTS - SF082_42_DS				
TITLE					
MATERIAL & FINISH					
APPROVED BY	GDS- P.MBR	SCALE 1:10	DATE 25/01/2023	PART NUMBER SF082_42_DS_P00	REV
DESIGNED BY	Licciardo H.P.	DIMENSION mm	SHEET 1 / 1	PART	PART REV
DRAWN BY	Licciardo H.P.	A2		FILENAME SF082_42_DS_P00.PDF	

Questo disegno è proprietà esclusiva di GDS. È vietato riprodurlo o distribuirlo a terzi senza l'approvazione scritta di GDS. - This drawing is an exclusive property of GDS. It is not permitted to distribute without GDS written permission.

MTS DOC NO WO4355-AE-78

EXHIBIT H
06_42" STRETCH LCD EXAMPLE INSTALL MANUAL MAN10884_R01 - INSTALL GUIDE 42
MIDAS-S

42” Stretch Display – MIDAS-S
Installation Guide 120/230VAC



Updated on: 20/09/2022 05:49:00

This manual outlines the precautions and procedures to be taken when installing the displays. Read this manual carefully prior to installing and using the display.

1. Warnings

The Manufacturer does not warrant this unit for defects or damages that are the result of misuse, neglect or from not having followed the recommended installation instructions or from improper operation.

Service work MUST be performed only by qualified service personnel who are thoroughly familiar with all the following checks and servicing guidelines.

During handling, please use proper clothing to prevent accidents (gloves - shoes etc).

For continued safety, no changes should be made to the circuits unless authorized in writing by the manufacturer.

Please ensure that no built-in protective devices are defective and/or have been disabled during servicing.

The manufacturer reserves the right to carry out modifications to the product described in this documentation.

Manufacturer does not warrant any damages to persons or devices that are not properly connected by means of a protective earth as per local general safety regulations.

2. SYMBOLS USED IN THIS MANUAL

Below are the various symbols used in this manual to highlight information of particular importance:



This symbol is intended to alert the user to the presence of uninsulated "dangerous voltage" inside the product, which may be of sufficient magnitude to constitute a risk of electric shock to the person



This symbol is used to highlight information and warnings that could damage the device or compromise the safety of personnel when not observed.



This symbol draws attention to warnings concerning precautionary measures to be employed to prevent situations that may damage the device.



This symbol is intended to alert persons involved in the handling and installation of the appliance that you must use accident prevention shoes for foot protection against any dropped material



This symbol is intended to alert persons involved in the handling and installation of the appliance that you need to wear helmets to protect against impacts with the appliance



This symbol is intended to alert persons involved in the handling, installation, repair and maintenance of the equipment that is necessary to use suitable protective gloves.
The thickness and the type of glove should be appropriate to the kind of work that is taking place (if it comes to handling, maintenance or repair of electrical, electronic and mechanical parts)



This symbol is intended to alert persons involved in the handling, repair and disposal of broken monitors, or maintenance and cleaning the monitor that it is necessary to use a face mask.

3. WARRANTY

The warranty conditions and the duration of the same are defined on the product order contractual document.

On some products, on the inside, there may be attached a "certificate of guarantee" that lists the model and serial number of the product. **Keep this certificate in order to communicate the data to the Service in the event of equipment failure.**

In the case of special warranty contracts signed directly with GDS Spa, it is not necessary to preserve the certificate attached with the monitor, as warranty terms are implied in the signed supply contract.

In these cases, it is enough to communicate the product code and serial number of the monitor requiring service under warranty.

4. WARRANTY EXCEPTIONS

The warranty applies only to equipment kept in good condition and not tampered with.
Except in cases where the customer enters into special contracts of insurance with our company, the following actions result in a loss of warranty:

- Malfunction, damage or deterioration caused by neglect of the user.
- Failure or damage caused by vandalism.
- Failure or damage caused by accidental impact, falling or tipping of the appliance.
- Malfunction, damage or deterioration caused by improper installation or not conforming to the specifications of the appliance.
  Please read the specifications of the device to verify the degree of protection. The penetration of liquids, chemicals, powders or other materials, as well as exposure to radiation, chemicals or atmospheric condition, is dependent on the degree of protection stated in the specifications, or in the chapter on installation.
- Failure, or damage caused by the use of substances or devices not suitable for cleaning internal or external device.
- Failure or damage caused by immersion in liquid or exposure to high temperatures, high humidity and condensation.
- Unauthorized actions or tampering of the appliance.
- Use of non-original spare parts or not approved by the manufacturer

5. SERVICE AND SUPPORT

For any requirements connected with the use and maintenance of the device or for requesting spare parts, please contact the Manufacturer directly, specifying the device's identification data as provided on the identification plate.

The details of the manufacturer are as follows:

GLOBAL DISPLAY SOLUTIONS Spa
Registered and administrative offices:
via Tezze di Cereda, 20/A
36073 Cornedo Vicentino (Vicenza) Italy
Tel.: +39 0445 428991
Fax: +39 0445 428992
e-mail: italy@gds.com
website: www.gds.com

GLOBAL DISPLAY SOLUTIONS INC
Maurice Cohen Building
5217 28th Avenue
Rockford, IL 61109
Tel.: +1 815 282 2328
Fax: +1 815 282 0297
Email: America@gds.com
Website www.gds.com

6. SAFETY PRECAUTIONS

WARNING!

Follow the instructions and take the operating precautions indicated; incorrect use of the equipment could result in a fire or a risk of electrocution.
The company disclaims any liability for injury procured to persons or property, or to the monitor, caused by failure to follow the instructions contained in this manual.

We recommend you install the device using exclusively the relevant accessories.

Incorrect installation, without using the recommended accessories, may cause the display to tip or fall over, causing serious damage to monitor, or the danger of fire, or human injury and loss of warranty

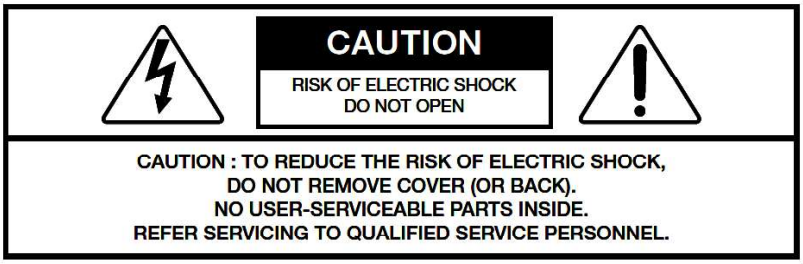

Do not use the device if it shows signs of damage or if the power supply cable is not perfectly intact; wait until a qualified technician has inspected it.

POWER SUPPLY

The device was constructed in accordance with the Class 1 safety standard; it is to be connected to a 120/230V~ power supply network and an efficient grounding system, by means of the power cable provided, or another certified, equivalent one, suitable for the country in which it is to be used.

Do not use the device if there are no mains socket compliant to the rules and equipped with a ground connection.

It is required connection of the equipment protective earthing conductor.

An all-pole mains breaker in accordance with IEC 62368-1 3rd Ed, Annex L shall be incorporated in the electrical installation of the building. (The rating of the overcurrent protective device must be C20 or less).

Conduits used for the entry of the cables shall have flammability class minimum V-1

AC power input conductors shall be separated by at least 50 mm from other conductors and circuits as required by NEC 725.136

7. INSTALLATION AND MAINTENANCE

Only trained and authorised maintenance technicians may make adjustments and carry out maintenance and/or repairs on the device for the sole purpose for which it was built.

Personnel permitted to work on the device must wear the necessary personal protective equipment (PPE) to protect themselves, in accordance with that set out in the applicable injury prevention regulations in force in the country the device is to be installed and used in.



Protection of feet: safety shoes



Protection of hands: safety gloves



Protection of the head: impact-resistant helmet

It is strictly forbidden to modify the assigned PPE in any way.

The manufacturer declines any responsibility for any damage to people arising from the failure to use PPE.

Operators and maintenance technicians are forbidden to wear clothing and accessories that could get entangled in the device.

Do not use the device if it shows signs of damage or if the power supply cable shows any damage; wait until a qualified technician has inspected it.

Note: This equipment has been tested and found to comply with the limits for a Class A digital device, pursuant to part 15 of the FCC Rules. These limits are designed to provide reasonable protection against harmful interference when the equipment is operated in a commercial environment. This equipment generates, uses, and can radiate radio frequency energy and, if not installed and used in accordance with the instruction manual, may cause harmful interference to radio communications. Operation of this equipment in a residential area is likely to cause harmful interference in which case the user will be required to correct the interference at his own expense.

8. SERVICE PERSONNEL

All cleaning and maintenance / repair work must be performed by a qualified technician, except when specified.
All technical information relating to a specific monitor or totem is contained in the service manual of the product to be required to GDS Spa by service personnel.

The manufacturer assumes no responsibility for any damage incurred by the monitor and accessories or persons or things, because of the failure to comply with the rules, regulations and information suggested in this manual.

9. CONFORMITY

This device has been designed and constructed in accordance with the following directives:

DIRECTIVES	DESCRIPTION	SYMBOL	Notes
FCC Part 15 Subpart B, 15.107 and 15.109 ICES-003	Electromagnetic Compatibility Directive		
UL62368-1/CSA C22.2 No.62368-1-14	Safety		
IEC EN 62368-1	Safety		

Notes:

None

Compliance Information Statement

Supplier's Declaration of Conformity
47 CFR 2.1077 Compliance Information

Unique Identifier:

- Trade name: MIDAS-S
- Model number: G42*

Responsible Party – U.S. Contact Information:

GLOBAL DISPLAY SOLUTIONS INC
Maurice Cohen Building
5217 28th Avenue
Rockford, IL 61109
Tel.: +1 815 282 2328
Fax: +1 815 282 0297
Email: America@gds.com
Website www.gds.com

FCC Compliance Statement (e.g., products subject to Part 15)
This device complies with Part 15 of the FCC Rules. Operation is subject to the following two conditions: (1) This device may not cause harmful interference, and (2) this device must accept any interference received, including interference that may cause undesired operation.

10. Precautions during installation

Before opening the front of the display, it is necessary to secure the display in the normal upright operating position. Failure to do so results in the display opening very forcefully. The display uses gas assisted pistons to open which have a substantial amount of energy which needs to be counteracted by the weight of the front panel. Open the display only in the normal operating position mounted on a support. This support must sustain the display weight without overturning when the front is open.

Do not place the display on top of an unstable location as this may cause injuries to people if the display falls or tips over.

During the installation procedure the display glass must be touched as little as possible because the surface treatment will need cleaning.

Do not twist the front assembly because this action could break the glass or the panel.

Never move the display by pulling only the front part.

To open the front there, are two gas springs. These springs can stick between the spring stem and the gasket; therefore, before opening the front completely you must slowly open the front two or three times for about 5cm.

Do not lift the display using glass handling suction cup or similar tools.

Be sure to operate the display only within the specified AC power range.

Use of an incorrect voltage will cause malfunctioning and may cause fire or electric shocks.

The temperature and humidity values must remain in the allowed range:

-25 to +40°C for direct Sunlight applications
-20 to +45°C for non-direct Sunlight applications
Humidity 10 - 90% RH max (Ta<=39°C)

During installation only, and under direct Sunlight and hot conditions, cover the surface of the TFT panel with the service tent.
In the case of rain, snow or wind undertake all the necessary actions to protect the display from humidity ingress.
During installation, if the display is off, the thermal management system is inactive and can't cool the panel.
Be sure that no built-in protective devices are defective and/or have been disabled during servicing; i.e. surge protection.
Before closing the module, check that none of the cables are over the fan duct openings, check that all cables are inside the internal profile of display, check and pull the cables from the front so they cannot be trapped between any component parts.

11. Precautions during usage

Never use the display if the power cable has been damaged.

The air inlets on the display provide sufficient ventilation to ensure that it operates properly without overheating. **Do not block these openings.**

If the display does not operate normally - in particular, if there are any unusual sounds or smells coming from it - switch it off immediately and contact the service center.

Switch off the display when it is going to be left unused for an extended period of time.

High voltage circuits are present inside the display. Removing the cabinet may expose you to the danger or fire or electric shocks.

After installing, clean the whole display with a soft clean lint-free cloth to remove dust and other particles and take care not to scratch the front glass surface of the display.

12. Building Installation - Disconnect Device and Branch Circuit Protection

A readily accessible and suitable disconnect device **must** be provided as part of the building installation. The purpose of the disconnect device is to provide an easy and accessible means for removing power from the product for servicing.

A readily accessible and suitable branch circuit protection device **must** be provided as part of the building installation. The purpose of branch circuit protection is to limit current in the case of a fault.

The disconnect device may also provide branch circuit protection (for example, a circuit breaker). Alternately, separate disconnect and branch circuit protection devices (fuses and a disconnect switch) may be employed.

The devices must be rated based on the plate rating of the product in accordance with the applicable local codes and specific customer requirements.

Branch circuit protection is commonly selected based on 125% of the product input rating. Such derating is to avoid nuisance tripping due to load surges or power transients and to meet code requirements. Applicable codes and customer requirements will vary.

Warning! Failure to provide an appropriate disconnect device and branch circuit protection may endanger service personnel. Serious injury and equipment damage may result if this warning is not observed.

A suitable **support** must be provided as part of **Building Installation**. The **support** must sustain the display weight without overturning when the front is open.

4.1. Wall or ceiling mounted equipment

The mounting means of equipment intended for wall or ceiling mounting shall be adequate. Compliance is checked by inspection of the construction and of available data, or where necessary, by the following test. The equipment is mounted in accordance with the manufacturer's instructions. A force in addition to the weight of the equipment is applied downwards through the geometric center of the equipment, for 1 min. The additional force shall be equal to three times the weight of the equipment but not less than 50 N. The equipment and its associated mounting means shall remain secure during the test."

13. Power supply connections

Warning: the display is pre-configured for 100-240VAC operation.

Should the need arise where the cable needs to be changed, use power wires with STYLE UL-1015, AWG14 or equivalent type having insulation voltage better than 600VAC.

Warning: For the electrical connection, in the final installations, a conduit of at least 16mm in diameter is required

The power supply cable has to be suitable for outdoor use and for a working temperature up to 75°C.
The display is also **capable** of being powered by 100-240VAC (it's an auto ranging version).

A single display draws a maximum of 3 amps @ 100VAC. It is recommended that no more than four displays are connected to a single 20A branch circuit.
After the display is mounted, open the unit with the locking key and lift front until the safety latch clicks on the gas spring. Install the Heyco 90° sweeps, sealing washers and nuts. The sealing washer is placed on the sweep side (outside). Connect the liquid-tite conduits to the 90° sweeps. The conduit just twists onto the sweep. Feed the power cables through one sweep and the Ethernet cable through the other sweep.
Power and Ethernet must be kept separate, never run all through the same conduit.
Connect power per images below.

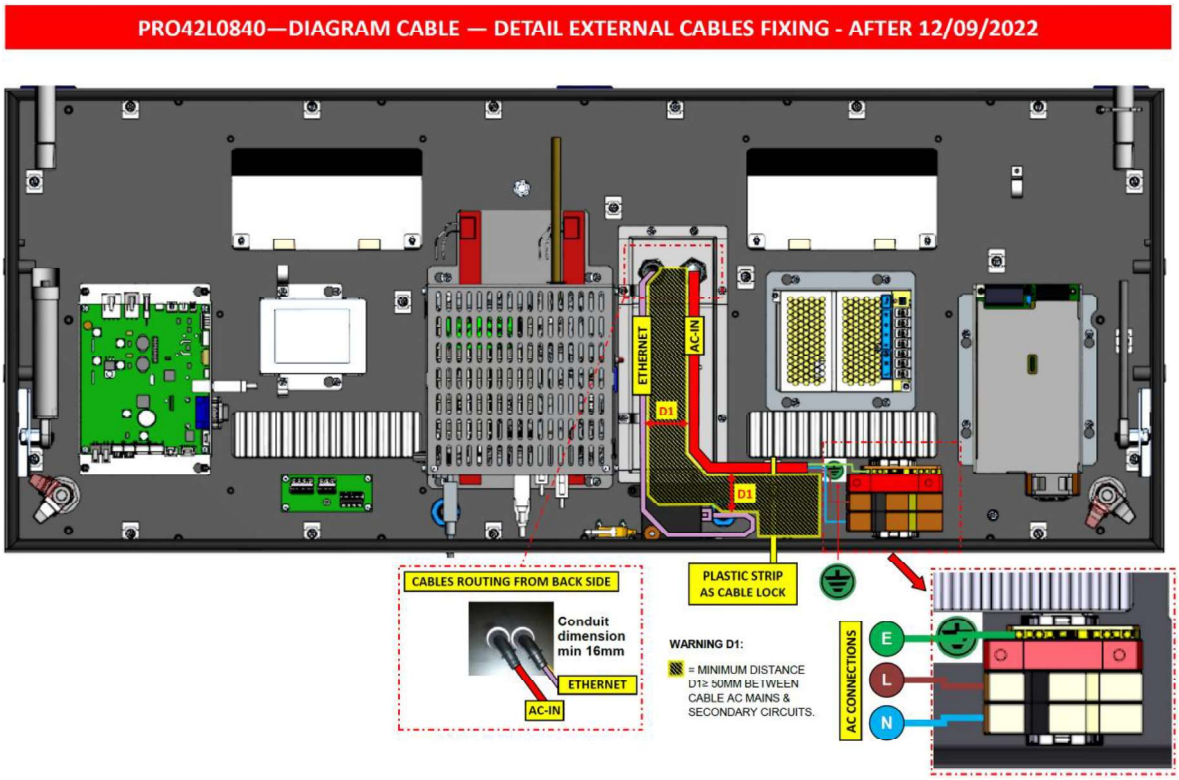

AC OPERATION:
YELLOW-GREEN: GROUND/EARTH (E=PE)
GREY or BROWN: LIVE (L)
BLUE: NEUTRAL (N)

For safety precautions, first connect the GROUND/EARTH wire, followed by NEUTRAL and LIVE. Then connects the Ethernet and clamp the two cables at the plastic clip.

14. AC Power line connection at spring terminal

Method for connecting the cables to the terminal block:

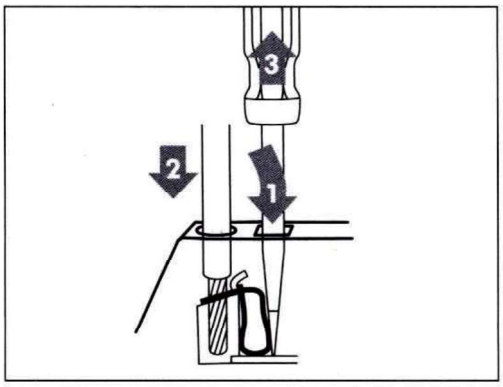

Insert the screwdriver in the proper opening.

The blade of the screwdriver automatically opens the crimp and allows the conductor to be inserted.

Remove the screwdriver. The conductor is securely retained.

The screw driver to be used must be 3.5 x 0.5mm (width x diameter)

ATTENTION: do not rotate the screwdriver

Connection method

The installation of mains power cord shall be such that if the cable should slip in its anchorage, placing a strain on conductors, the PROTECTIVE EARTHING CONDUCTOR will be the last to take the strain.

Not acceptable insertion

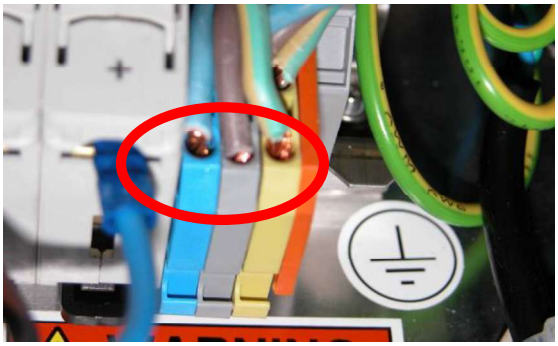

Every block with the cable inserted must be closed on the appropriate cable holder. The cable holder block must be inserted like in the figure position. Pay special attention to insert the plate side on the bottom side.

15. External cables clamped

Warning: All external cables (AC and Ethernet) need to be safely clamped with a plastic strip provided near the main AC as described in the before picture.

16. Computer Ethernet cable

The Ethernet cable from external data feed connects to the Ethernet surge protector.

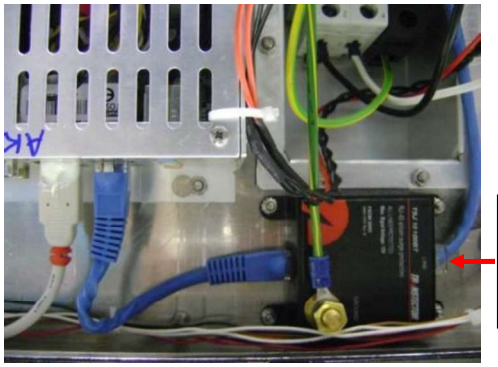

17. Grounding

The **Site Building** shall provide the safety ground/protective earth ground to all units.

The chassis ground point is provided.

Install the PE (protective earthing) conductor that is identical in size, insulation material, and thickness to the branch-circuit supply conductors. The PE conductor must be Green with Yellow stripes, or Yellow with Green Stripe

An Earth bonding conductor is to be connected from the branch circuit distribution panel to the Earth bond stud in the display.
The main PE wire coming from external AC cable need to be connected at terminal block at DIN rail. This connection is near a green earth ground symbol.



The display may have one or two bonding studs. If the display has one stud, the earth bond wire entering the display must be the first wire on the stud, touching the chassis and then nutted. All other earth wires may then be put on the stud and secured with a second nut.

If the display has two earth studs, one is used exclusively for the earth wire entering the display and secured with nut. All other earth wires go on the second stud and then secured with a nut.

18. Startup

The displays are preconfigured to start automatically after installation. The breaker must be turned **ON** before closing the display. "On" is shown by **RED (hot)** indicators with the switch flipped in the up or on position. If the indicators are green, this means the switch is off or tripped.





The display will take about 30 seconds to load the operative system and show one of the following images:



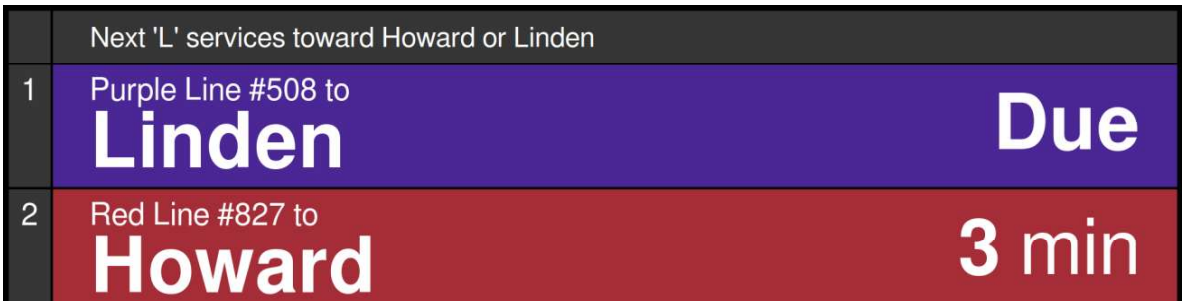



19. Surge suppressor

The display includes two different surge suppressors. One is applied on the AC DIN rail, and the other is used for the ethernet line toward PC.

Should the need arise where the suppressors need to be changed, use the same type and/or fully equivalent.

AC surge suppressor suggested:

Before replacing the suppressor is necessary use the original type indicated below or any other with equivalent specifications.

Mfr. Name	Mfr. Part Number	Maximum Continuous Voltage [Vdc]	Minimum Protection Level [kV]	Max Disch. Current [kA]	Operat. Temp. [°C]	Homol.	Spare part GDS Code
DEHN	952 070	275	1	≥ 40	-40…+80	UL, CE	SP-VAR00011

This component protects the monitor from mains overvoltage (eg due to lightning discharges).
In the presence of a strong overvoltage, this component puts shorted the electrical line, so as to prevent the overvoltage reaches the rest of the electrical and electronic parts of the monitor.

In normal operation of the protection, the window is green
If the component intervenes because of an overvoltage, the window turns red, and in this case the device must be replaced (not recoverable)

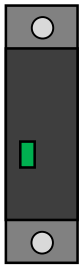

Normal operation

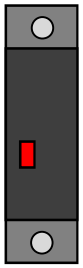

Protector activated
(Replace the component)

Ethernet surge suppressor suggested:

Mfr. Name	Mfr. Part Number	Vmaxdc [Vdc]	Operat. Temp. [°C]	Spare part GDS Code
Transtector	1101-620	12	-30…+65	SP-VAR00046

20. Installation

Fit the unit on the suitable support.

The **support** must be provided as part of **Building Installation**.

The **support** must sustain the display weight without overturning when the front is open. **Exercise caution when lifting**. The display weighs 48Kg (106lbs). It takes a minimum of two people to lift and carry safely. It is recommended to have a mechanical lift to aid in installation.

Before fitting the screws, it is advisable to apply LOCTITE 8153 anti-seize compound or equivalent to the screw threads.

All the M10 mounting screws must be used with a lock washer to prevent the screws from coming loose.

Using M10 Stainless steel screws, the ***maximum penetration into the steel screw insert is 12.7mm (1/2").*** The length of the screws may change depending on the bracket design thickness.
Example: If the mounting bracket is 3/8" thick, use 25mm (1.0") screw with a stainless steel Lockwasher and flat washer.

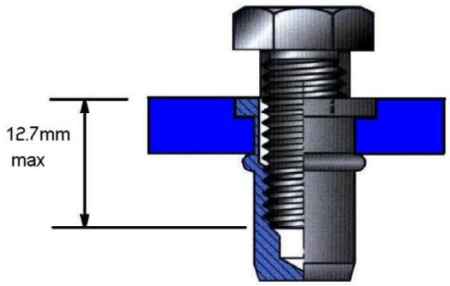

Length of the brackets screws

The maximum tightening torque value must not exceed 27 Nm. (19.9 lb/ft)

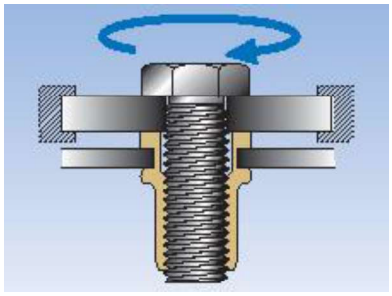

Mechanical dimensions 42”

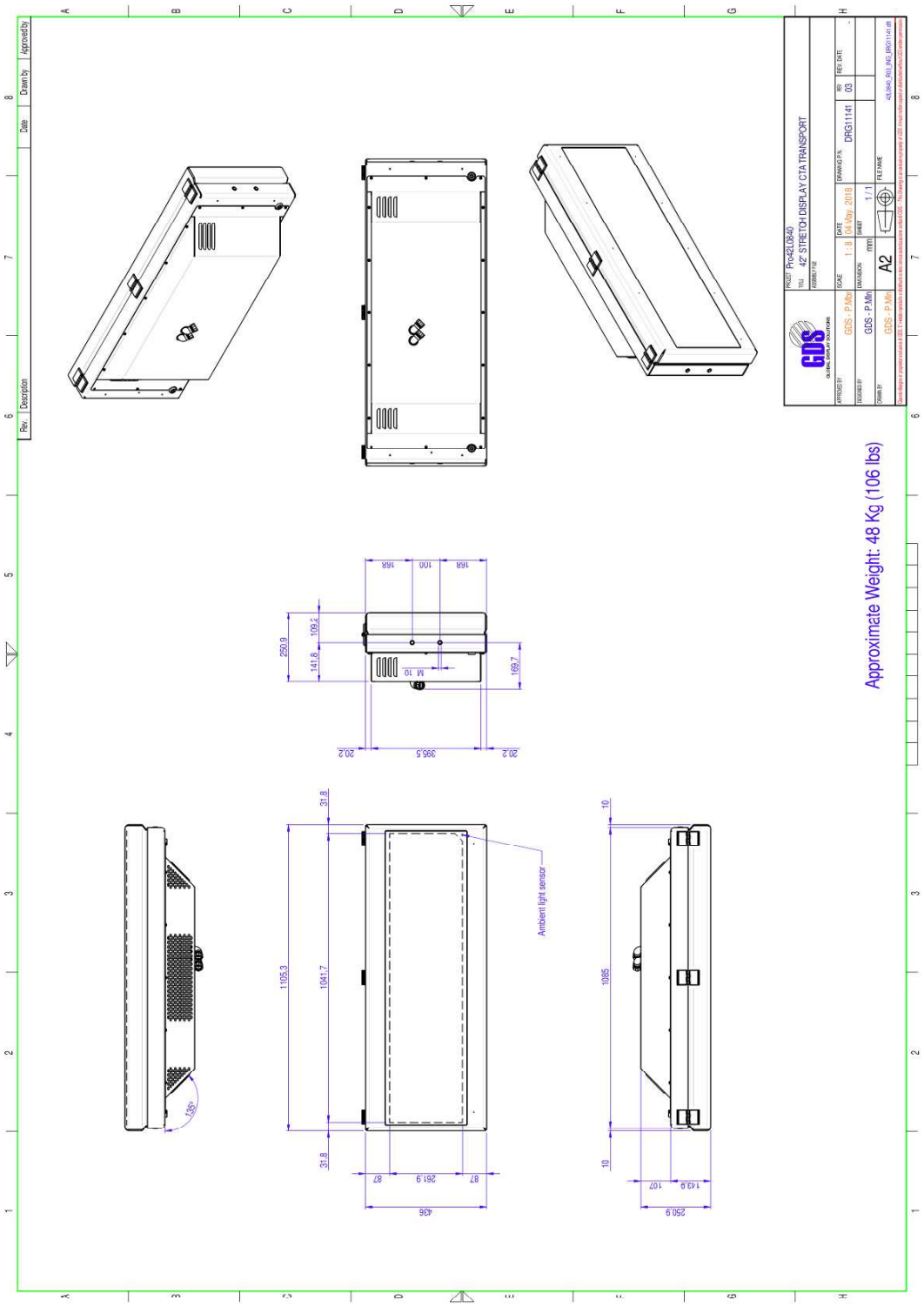

42” Overall dimensions and fixing points

Back to Back mounting bracket

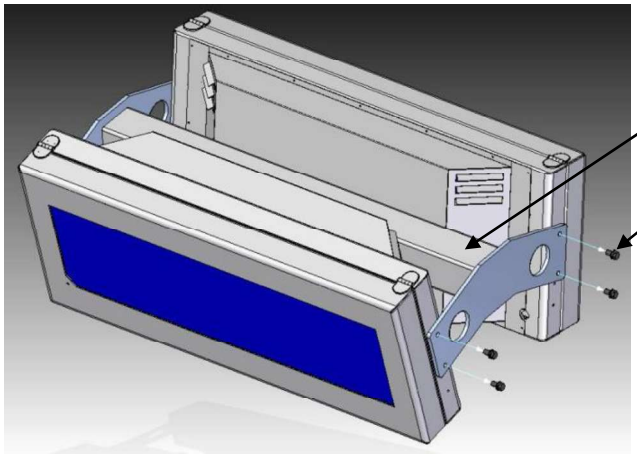

MTW03160 mounting Bracket

M10x25mm Stainless bolt,
Lockwasher and Flat Washer.
4pc per side, x2 sides.

Single Sided mounting bracket

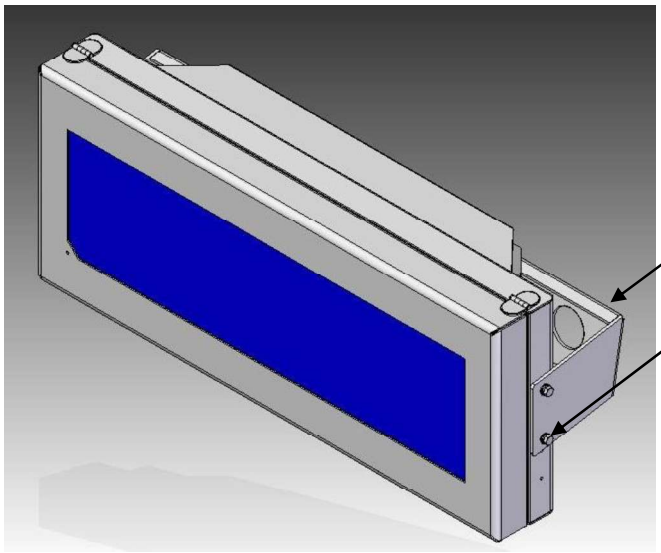

MTW02747 mounting Bracket

M10x20mm Stainless bolt,
Lockwasher and Flat Washer.
2pc per side, x2 sides.

Release the cover locks securing the display front to the frame. For this operation it is necessary to use the special KEY tool provided with the unit.

LOCK POSITION

ATTENTION: while closing the display, ensure there are no cables trapped between the back and the front. There is a **safety lock** on the GAS spring that **must be depressed** and **held depressed** until you are just past the locking point, then the lid can be fully closed.

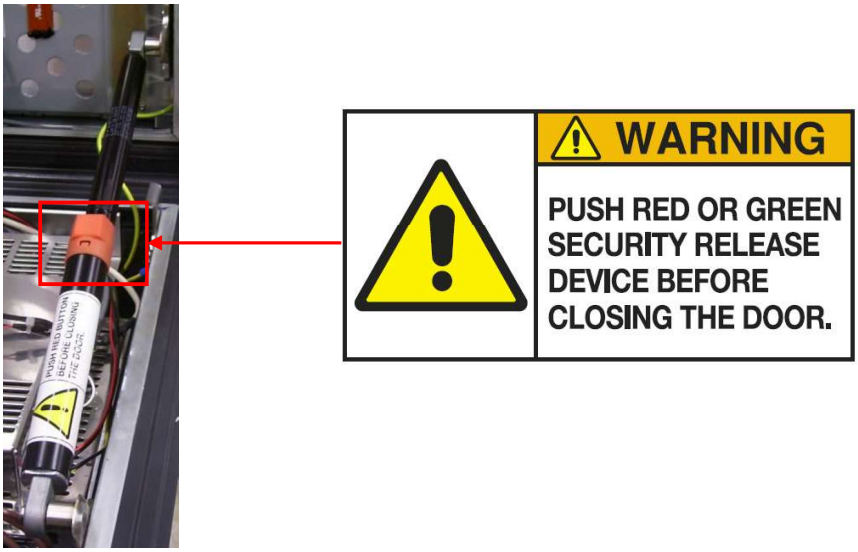

Wall mount or Ceiling Mount.

The display is equipped with cooling fans located on the back bottom of unit which requires 10cm of free air spacing to provide adequate cooling. These areas must be free of any structure that may restrict the air flow.

Note: The mounting means of equipment intended for wall or ceiling mounting shall be adequate. Compliance is checked by inspection of the construction and of available data, or where necessary, by the following test.

The display must be installed by qualified, experienced people and wherever applicable are licensed by the appropriate authorities. It is very important to carefully follow all local, state and national building and electrical codes. (especially the latest revision of the National Electrical Code) and standard safety procedures for installing and working with this type of equipment. Improper procedures or installation can result in void the warranty, damage to the equipment or the building, and injury to you.

"The equipment is mounted in accordance with the manufacturer's instructions. A force in addition to the weight of the equipment is applied downwards through the geometric centre of the equipment, for 1 min. The additional force shall be equal to three times the weight of the equipment but not less than 50 N. The equipment and its associated mounting means shall remain secure during the test."

All national and local regulations must be followed by the Installer

Unpack

Open the packing from the top. Fold the packing flaps outward and lay the box on its side. Now turn the box upside-down as shown by the arrow.

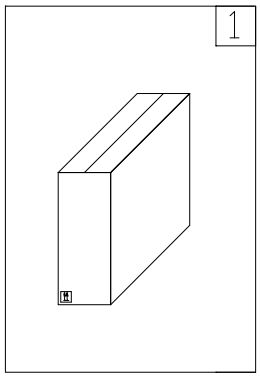

Open the packing from the top.

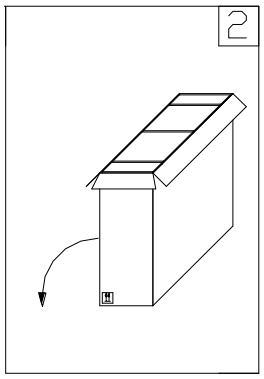

Fold the packing flaps outward and lay the box on its side.

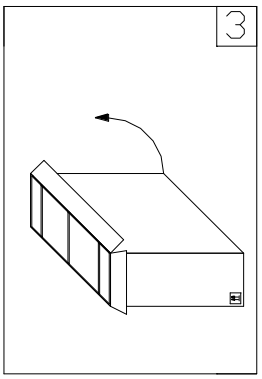

Now turn the box upside-down as shown by the arrow.

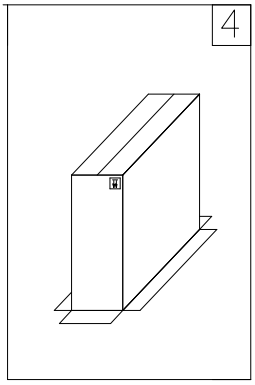

The box should now be in the position shown.

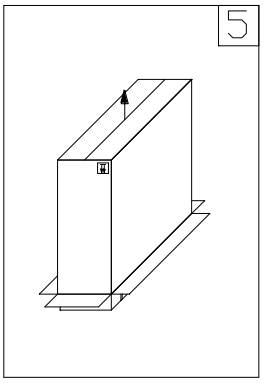

Lift the outer box by pulling upwards.

.

Storage temperature: from –40°C to +60°C max wet bulb 39°C. +10/+90% RH

21. Cleaning

After the installation, if it is necessary to clean the display, please follow the instructions below:

The best method of cleaning is by washing using a solution of warm water and mild detergent (ph 5-8). All surfaces should be cleaned using a soft cloth or sponge, using nothing harsher than natural bristle brushes.

The temperature of the parts to be cleaned should not exceed 30°C and not be exposed to direct sunlight.

The temperature of cleaning agents should not exceed 30°C and steam jets must not be used.

Cleaning agents should not remain on the surface for more than one hour.

After a minimum of 24 hours, the cleaning may be repeated if necessary.

Rinse with clean, cold water immediately after each cleaning procedure.

Dry off with a clean lint free towel to prevent water streaks, etc.

22. Technical specifications

Display diagonal	42.8”
Pixel Resolution	1920 x 480
Aspect Ratio	12:3
Brightness	1200 nits
Backlight technology	LED
Backlight Lifetime	50Kh
Protective glass	6mm hardened
Anti-reflective coating	Yes
Outdoor Rating	IP65
Operating Temperature	-25 to +40°C with direct sun
Storage Temperature	-40 to +60°C
Operating Humidity	90% relative humidity, non-condensing
Dimensions max (W x H x D)	1105.3 x 436 x 279mm (43.52 x 17.16 x 11.0 inch)
Weight	<48Kg (106lbs)
Power Ratings	120/230VAC 50/60Hz
Power consumption max	300W
Current consumption	3A@100VAC / 1,5A@230VAC
Diagnostic features	- Temperature sensors - Humidity sensor - Vibration sensor - Voltage sensor - Door closure sensor - TFT sensor - Ambient light sensor
Remote diagnostic via Ethernet	SNMP MIB system : - Read all diagnostic parameters - Commands and diagnostic parameters - Trap alarms/events
Color of unit	Satin Black
Product Markings	UL, FCC, CE

Integrated PC

Fanless PC	Yes
Processor CPU	Intel i3 6100U
Memory RAM	4GB DDR4
Motherboard size	Mini ITX
Drive	1 x 128GB SSD 2.5” SATA3
USB ports	4 USB 2.0
Ethernet ports	2 RJ-45 Ports 100/1000Mbps
Video ports	HDMI, DP, LVDS
LVDS type	1 x 24bit dual channel
Serial port	4 x RS232, 2 x RS232/422/485 (on board)
Standard Operating System	Linux Ubuntu 16.04

ATTACHMENT B
NEGOTIATED FEE PROPOSAL

Work Order Estimate Summary

MTS Doc. No.	**PWL355.0-22**
Work Order No.	**WOA455-AE-78**
Attachment:	**B**

Work Order Title: **MIDCOAST VMS DESIGN**

Project No:

Table 1 - Cost Codes Summary (Costs & Hours)

Item	Cost Codes	Cost Codes Description	Total Costs
1			
2			
		Totals =	

Table 2 - TASKS/WBS Summary (Costs & Hours)

Item	TASKS/WBS	TASKS/WBS Description	Labor Hrs	Total Costs
1		Project Management and Coordination	232.0	57,306.2
2		Site Reconnaissance and Summary	174.0	43,888.6
3		Plans, Specifications and Estimates	568.0	135,475.0
4				
5				
		Totals =	**974.0**	**236,669.8**

Table 3 - Consultant/Subconsultant Summary (Costs & Hours)

(If Applicable, Select One)				Consultant	Labor Hrs	Total Costs
DBE	DVBE	SBE	Other			
				PSOMAS	284.0	$66,892.92
				Hatch	690.0	$169,776.90
				Totals =	**974.0**	**$236,669.82**

Work Order Estimate Summary

Consultant/Subconsultant: **PSOMAS**

Total Hours = **284**

Total Costs = **$66,892.92**

Work Order Title: **MIDCOAST VMS DESIGN**

Item	TASKS/WBS	TASKS/WBS Description	ODCs (See Attachment)	Admin - 3	CADD - Senior	Contract Manager	Engineer - 2	Engineer - Senior	Engineer - Principal	Engineer - 3	Field Technician - 2	Field Technician - 3	Field Technician - Senior	Project Manager	Surveyor 2	Surveyor -3	Surveyor - Senior	Task Manager	Technical Expert	Technical Expert (Survey)	Total Hours	Totals
				$ 116.02	$ 144.62	$ 195.16	$ 166.03	$ 259.92	$ 272.27	$ 216.40	$ 89.36	$ 142.34	$ 170.55	$ 239.95	$ 117.03	$ 149.05	$ 201.49	$ 241.31	$ 309.97	$ 302.77		
1	**Task 1**	**Project Management and Coordination**																				
	1.1 Invoicing, scheduling, progress reports and administration			12					24												36	$7,926.72
	1.2 MTS/Stakeholder coordination								34	12									6		52	$13,713.80
	1.3 QA/QC								24												24	$6,534.48
		Subtotals (Hours) =	N/A	12					82	12									6		112	$28,175.00
		Subtotals (Costs) =		$1,392.24					$22,326.14	$2,596.80									$1,859.82		**112**	**$28,175.00**
2	**Task 2**	**Site Reconnaissance and Summary**																				
	2.1 Structural Review									24											24	$5,193.60
	2.2 Data/Electrical Review																					
	2.3 Technical Memorandum									8									2		10	$2,351.14
		Subtotals (Hours) =	N/A							32									2		34	$7,544.74
		Subtotals (Costs) =								$6,924.80									$619.94		**34**	**$7,544.74**
3	**Task 3**	**Plans, Specifications and Estimates**																				
	3.1 Preliminary Design																					
	3.1.A Structural									24									8		32	$7,673.36
	3.1.B Data/Electrical Drawings																					
	3.2 Final Design (60%, 90%, 100%)									100									6		106	$23,499.82
		Subtotals (Hours) =	N/A							124									14		138	$31,173.18
		Subtotals (Costs) =								$26,833.60									$4,339.58		**138**	**$31,173.18**
	Totals (Summary) =													**Totals =**							**284**	**$66,892.92**
	Total (Hours) =		N/A	12					82	168									22		284	
	Total (Costs) =			$1,392.24					$22,326.14	$36,355.20									$6,819.34			$66,892.92
	Percentage of Total (Hours) =		N/A	4%					29%	59%									0.077464789		100%	
	Percentage of Total (Costs) =			2%					33%	54%									0.101944122			90%

Work Order Estimate Summary

Consultant/Subconsultant: **Hatch**

Total Hours = **690**

Total Costs = **$169,776.90**

Work Order Title: **MIDCOAST VMS DESIGN**

Item	TASKS/WBS	TASKS/WBS Description	ODCs (See Attachment)	Engineer - Principal	Planner - 3	Planner-Senior	Technical Expert	Technician - 3	Technician - Senior	Total Hours	Totals
				$ 333.91	$ 198.90	$ 407.52	$ 402.44	$ 183.26	$ 285.26		
1	**Task 1**	**Project Management and Coordination**									
	1.1 Invoicing, scheduling, progress reports and administration								30	30	$8,557.80
	1.2 MTS/Stakeholder coordination							20	20	40	$9,370.40
	1.3 QA/QC							30	20	50	$11,203.00
		Subtotals (Hours) =	N/A					50	70	120	$29,131.20
		Subtotals (Costs) =						$9,163.00	$19,968.20	**120**	**$29,131.20**
2	**Task 2**	**Site Reconnaissance and Summary**									
	2.1 Structural Review										
	2.2 Data/Electrical Review		$8,647.50								$8,647.50
	2.3 Technical Memorandum							80	10	90	$17,513.40
								40	10	50	$10,183.00
		Subtotals (Hours) =	N/A					120	20	140	$36,343.90
		Subtotals (Costs) =	$8,647.50					$21,991.20	$5,705.20	**140**	**$36,343.90**
3	**Task 3**	**Plans, Specifications and Estimates**									
	3.1 Preliminary Design										
	3.1.A Structural										
	3.1.B Data/Electrical Drawings							120	150	270	$64,780.20
	3.2 Final Design (30%, 60%, 90%, 100%)							60	100	160	$39,521.60
		Subtotals (Hours) =	N/A					180	250	430	$104,301.80
		Subtotals (Costs) =						$32,986.80	$71,315.00	**430**	**$104,301.80**
		Totals (Summary) =								**690**	**$169,776.90**
		Total (Hours) =	N/A					350	340	690	
		Total (Costs) =	$8,647.50					$64,141.00	$96,988.40		$169,776.90
		Percentage of Total (Hours) =	N/A					51%	49%	100%	
		Percentage of Total (Costs) =	5%					38%	57%		100%

Work Order Estimate Summary

Consultant/ Subconsultant: **Hatch**

Work Order Title: **MIDCOAST VMS DESIGN**

TASKS/WBS (1-5)

ODC Item	Description	Unit	Unit Cost	Task 1		Task 2		Task 3		Task 4		Task 5	
				Quantity	Total	Quantity	Total	Quantity	Total	Quantity	Total	Quantity	Total
1	Travel Milage	1	$0.76			600	$456.00						
2	Hotel	1	$237.00			14	$3,318.00						
3	Per Diem - Meals (1st/Last Day)	1	$64.50			4	$258.00						
4	Per Diem - Meals	1	$86.00			10	$860.00						
5	Travel - Airfare	1	$1.75			1,706	$2,985.50						
6	Tavel - Rental Car	1	$55.00			14	$770.00						
7													
8													
9													
10													
				Subtotal =		Subtotal =	**$8,647.50**	Subtotal =		Subtotal =		Subtotal =	

TASKS/WBS (6-10)

ODC Item	Description	Quantity	Total	Quantity	Total	Quantity	Total	Quantity	Total	Quantity	Total	Totals Quantity	Totals Total
1	Travel Milage											**600**	**$456.00**
2	Hotel											**14**	**$3,318.00**
3	Per Diem - Meals (1st/Last Day)											**4**	**$258.00**
4	Per Diem - Meals											**10**	**$860.00**
5	Travel - Airfare											**1,706**	**$2,985.50**
6	Tavel - Rental Car											**14**	**$770.00**
7													
8													
9													
10													
		Subtotal =		Subtotal =		Subtotal =		Subtotal =		Subtotal =		**Totals =**	**$8,647.50**

Metropolitan Transit System

DRAFT FOR EXECUTIVE COMMITTEE REVIEW DATE: 11/5/2026

Agenda Item No. 08

MEETING OF THE SAN DIEGO METROPOLITAN TRANSIT SYSTEM
BOARD OF DIRECTORS

November 19, 2026

SUBJECT:

Schley Grade Crossing Replacement – Job Order Contract (JOC) Work Order

RECOMMENDATION:

That the San Diego Metropolitan Transit System (MTS) Board of Directors authorize the Chief Executive Officer (CEO) to execute Job Order Contract No. MTSJOC456-01 under MTS Doc. PWL456.0-26 (in substantially the same format as Attachment A), with Domestic Rail Solutions Corp. (DRS), in the amount of $757,865.79 for repair of the Schley Street grade crossing.

Budget Impact

The total cost of this contract is estimated to be $757,865.79. Under separate MTS Doc No. L1282.0-16, with The Gordian Group, MTS will pay a 1.76% JOC software license fee in the amount of $13,338.44. The project will be funded by the Capital Improvement Program (CIP) 2005125701 – Grade Crossing Replacement.

DISCUSSION:

The scope of this project involves replacing the grade crossing assembly located at the Schley St Crossing in Barrio Logan on the Blue Line South right of way. The existing precast crossing panel assembly is exhibiting movement under load outside of allowable tolerances and must be immediately replaced. Due to existing site and rail usage conditions, the precast panel assembly will be replaced with a cast-in-place concrete crossing assembly.

Today's proposed action would issue a work order to DRS under their JOC General Railroad Construction Services master agreement. DRS, along with its subcontractors EBS General Engineering, Lazer West Engineering, CONNORP81 Inc, CPL, and Hudson Safe-T-Lite, will provide all materials, labor, and equipment for this work. Pricing for this repair work order was reviewed and determined to be fair and reasonable. Work is expected to be completed within 2 months of issuance of the notice to proceed.

JOC is a procurement method under which public agencies may accomplish frequently encountered repairs, maintenance, and construction projects through a single, competitively procured long-term agreement.

The JOC program includes a catalogue of pricing for a variety of potential tasks to be performed under the contract that have been pre-priced by the contractor, the Gordian Group. All potential contractors are subject to the pricing within this catalogue. Each contractor then includes an adjustment factor increasing their proposed price from the catalogue price, to determine the total cost of the task order. The adjustment factor represents an average percentage increase over the catalogue price (i.e., 1.25 adjustment factor represents 25% above the catalogue price) for that respective task within the project. In order to select the lowest responsive and responsible bidder, MTS staff compares each contractor's proposed adjustment factor.

On March 3, 2026, MTS issued an Invitation for Bids (IFB) seeking a contractor to provide JOC railroad construction services. The contract consists of repair, remodeling or other repetitive work involving railroad construction improvements. This includes, but is not limited to, main Continuously Welded Rail (CWR) track rehabilitation/replacement, grade crossings (pre-cast concrete panels, rubber panels, paved with rubber rail interface) special track work, direct fixation, signal systems, overhead catenary, traction power, and related civil construction improvements work, as well as all required incidental professional and technical services required for quality control monitoring and testing, shop drawings, safety, environmental, scheduling, traffic control, storm water pollution prevention, geotechnical, surveying, biological, and hazardous/contaminated materials management for projects typically located in or near the railroad right of way within San Diego County including, but not limited to, the right of way reserved for the San Diego Trolley, Coaster, or freight lines.

Two (2) bids were received, and MTS determined that DRS was the lowest responsive and responsible bidder. On June 18, 2026 (Agenda Item (AI) 06), the MTS Board approved MTS Doc. No. PWL456.0-26 with DRS for General Railroad Construction Services. Today's work order will be issued under this master agreement.

DRS will utilize the following subcontractors for this project:

Subcontractor Name	Subcontractor Certification	Subcontractor Amount
Cable Pipe and Leak Detection	None	$3,000.00
Connorp81 Inc	None	$8,000.00
EBS General Engineering	None	$235,500.00
Hudson Safe-T-Lite	None	$25,000.00
Lazer West Engineering Inc	None	$20,000.00

This work order is not subject to the Project Labor Agreement (PLA) approved under the Board Policy No. 66 because it is a work order under $1,000,000.00.

Therefore, staff recommends that the MTS Board of Directors authorize the CEO to execute Job Order Contract No. MTSJOC456-01 under MTS Doc. No. PWL456.0-26 with DRS, in the amount of $757,865.79 for repairs of the Schley Street grade crossing.

/s/ Sharon Cooney
Sharon Cooney
Chief Executive Officer

Key Staff Contact: Julia Tuer, 619.557.4515, Julia.Tuer@sdmts.com

Attachment: A. Draft Work Order MTSJOC456-01

Metropolitan Transit System

JOB ORDER CONTRACT
WORK ORDER

PWL456.0-26
CONTRACT NUMBER

MTSJOC456-01
WORK ORDER NUMBER

THIS AGREEMENT is entered into this _____ day of _____ 2026, in the state of California by and between San Diego Metropolitan Transit System ("MTS"), a California public agency, and the following, hereinafter referred to as "Contractor":

Name: Domestic Rail Solutions, Corp

Address: 160 S. Old Springs, Ste. 102,
Anaheim, CA 92808

Form of Business: S Corporation
(Corporation, partnership, sole proprietor, etc.)

Telephone: 714.800.3797

Authorized person to sign contracts: Paul Marshall (Name) COO (Title)

Pursuant to the existing Job Order Contract (MTS Doc. No. PWL456.0-26), MTS issues a Work Order to Contractor to complete the detailed Scope of Work (attached as Exhibit A.), the Cost Breakdown for the Scope of Work (attached as Exhibit B.), and the subcontractor listing form applicable to this Work Order (attached as Exhibit C.)

TOTAL PAYMENTS TO CONTRACTOR SHALL NOT EXCEED $757,865.79

SAN DIEGO METROPOLITAN TRANSIT SYSTEM	DOMESTIC RAIL SOLUTIONS (DRS)
By: _____ Sharon Cooney, Chief Executive Officer	Firm: _____
Approved as to form:	By: _____ Signature
By: _____ Karen Landers, General Counsel	Title: _____

San Diego Metropolitan Transit System (MTS) is a California public agency comprised of San Diego Transit Corp., San Diego Trolley, Inc. and San Diego and Arizona Eastern Railway Company (nonprofit public benefit corporations). MTS member agencies include the cities of Chula Vista, Coronado, El Cajon, Imperial Beach, La Mesa, Lemon Grove, National City, Poway, San Diego, Santee, and the County of San Diego. MTS is also the For-Hire Vehicle administrator for nine cities.

EXHIBIT A
(Scope of Work)

San Diego Metropolitan Transit System
1255 Imperial Ave
San Diego, CA 92101

Final Scope of Work

Date: 10/21/2026

Job Order Contracting

To:	Paul Marshall Veteran's Engineering Services 2300 N Batavia St Orange, CA 92685 (714) 733-1462 paul@veteransesinc.com	**From:**	Jack Canavan San Diego Metropolitan Transit System 1255 Imperial Ave San Diego, CA 92101 (619) 557-4576 jack.canavan@sdmts.com

Contract Number:	PWL456.0-26
Job Order Number:	MTSJOC456-01
Job Order Name Title:	Schley Grade Crossing Replacement
Location:	See Scope See Scope See Scope San Diego, CA 92101
Brief Scope of Work:	Replacement of precast panel crossing assembly with a cast-in-place concrete crossing assembly at Schley St, Blue Line - South.

The following items detail the scope of work as discussed at the site. All requirements necessary to accomplish the items set forth below shall be considered part of this scope of work.

See attached documents.

All job orders include the labor, equipment, and material costs for a complete and in-place installation, unless otherwise noted.

Detailed Scope of Work
MTSJOC456-01 – Schley Grade Crossing Replacement

General:

The Contractor shall complete the construction of this project in its entirety, providing all labor, materials, equipment, and traffic control required for all work including utility location and protection, demolition, track replacement, drainage, resurfacing, replacement of striping and pavement markings, material procurement, and all other work necessary to complete the work in accordance with the Project Specifications and Detailed Scope of Work.

This job order is for the replacement of the Schley Street grade crossing located on the Blue Line South in San Diego.

This work requires but is not limited to the installation of head hardened rail, rubber rail interface, concrete crossties, wood transition crossties, galvanized e-clips, insulators, tie pads, ballast, 16-ounce filter fabric, reinforced concrete, asphalt concrete, and pavement markings. In addition, this work requires the removal and disposal of all existing track material, asphalt, concrete, waste, and spoils within the limits of work.

The contractor shall:

- Remove and dispose of 320 TF total: 160 TF from the eastbound track and 160 TF from the westbound track. This includes the existing precast concrete panels, asphalt, track, crossties, filter fabric, and top ballast. All material scheduled for removal shall be subject to return to MTS for storage and reuse.
- Demo and removal of additional concrete paving and AC paving outside of the crossing as detailed in “Schley Xing Exhibit_R3.”
- Conduct compaction testing to ensure the existing subgrade is compacted to 95% per ASTM D1557 / D6938 standards.
- Install 320 TF total: 160 TF on the eastbound track and 160 TF on the westbound track, including 16-ounce geotextile fabric placed on subgrade, top ballast, one-hundred thirty (130) concrete ties spaced on 24-inch centers, galvanized e-clips, rubber rail interface with a 2.5-inch flangeway, and all necessary other track materials (OTM).
- Install new cast-in-place concrete grade crossing as detailed in “Schley Xing Exhibit_R3.”
- Replace existing asphalt in kind as detailed in “Schley Xing Exhibit_R3”
- Provide and install thirty-six (36) wood transition crossties adjacent to new grade crossing; (3) 11-foot, (3) 10-foot, (3) 9-foot at each transition.
- Install new sidewalk (4” PCCP with raised epoxy pebble), including curb and gutter where applicable per “Schley Xing Exhibit_R3.” Sidewalk striping is to be replaced per city standard.
- Existing roadway striping is to be preserved in place. In the event of damage to existing road striping, contractor is to replace in-kind and per city standards.
- Surface, line, dress, and destress track.
- Procure all necessary city traffic control and noise permits.

Specifications:

All work shall conform to the Special Provisions within the executed MTS Job Order Contract (JOC) PWL456.0-26 and the Project Specifications.

Owner Furnished Material:

MTS will supply contractor with (320) TF of 115 RE rail and (130) concrete crossties to complete the scope of work. Contractor is responsible for transporting the material to the job site and field-fitting as needed. Rail material will be located in the ROW on the Blue Line South between J Street and L Street. Concrete ties will be located at the MTS Wright Street Yard and C Yard. Contractor is to coordinate pickup with MTS personnel.

Submittals:

- Concrete Mix Design
- Asphalt Mix Design
- Ballast
- 16 oz Geotextile Fabric
- Wood Transition Ties
- Rubber Rail Interface
- Galvanized E Clips and other track materials (OTM)
- Traffic Control Permit
- Noise Permit
- Hour by Hour schedule

Construction Surveying:

All field construction surveying required for accurate horizontal and vertical location of railroad tracks and other various items of work on the contract shall be furnished by the Contractor. For track rehabilitation, the elevation and alignment of the new track shall, generally, be based on the location of the existing tracks as indicated on the plans. The Contractor shall provide the Engineer with the location and elevation of the existing track at 25’ intervals extending 100 feet beyond the project limits. The survey information shall be submitted within 30 calendar days following Notice to Proceed for evaluation by MTS. The contractor shall replace all existing property corner markers and monuments and any local agency monuments disturbed during construction operations as directed by the Engineer. These new markers, monuments, and well monuments shall be on a record of survey map in accordance with applicable laws and regulations and filed in the Office of the County Recorder of San Diego County.

Existing Utilities:

The contractor shall notify the Engineer and Underground Service Alert (USA) at least two working days, but not more than 14 calendar days, prior to performing any excavation or other work close to any underground pipeline, conduit, wire or other structure.

Signal wires, track circuits, platform lighting cables, irrigation lines or other MTS underground facilities may exist within the track way. The contractor is to locate and protect all existing underground facilities. The contractor shall coordinate with SDTI MOW personnel in order to have said facilities located and marked out by Cable, Pipe & Leak Detection (CPL) (619) or other approved utility locating subcontractor familiar with MTS facilities. If the Contractor cannot protect existing underground

facilities, the Contractor shall replace any damaged or removed underground facilities in a timely manner as to not allow for extended delays to the trolley services. If the services are subject to extended delays, the contractor shall notify MTS prior to the expiring of the original scheduled work time. All existing MTS underground facilities located shall be as-built and included on the contractor's as-built drawings.

Where such facilities are not located on the plans, no work shall be performed near said facilities until the owner, or his representative, has located the facility by potholing, probing, or other means that locate and identify the facility.

The Contractor's attention is directed to the existence of overhead power lines, energized trolley wires, catenary poles, signals, and grade crossing signals at the locations of work. Any one or a combination of these obstructions could exist at any one location. No obstructions shall be permitted within 10 feet of operating tracks. The Contractor shall notify MTS at least 3 working days prior to excavating in the railroad right-of-way to locate buried cables.

Schedule:

All work shall be complete as soon as possible within 90 calendar days from issuance of NTP. The work shall proceed using one (1) weekend for installation of the grade crossing. Staging of materials and partial demolition work may take place during revenue hours with prior approval and during non-revenue service. The contractor to provide ingress & egress, including accessible wheelchair access and directional signage to include universal symbol for wheelchair access, for the passengers at all time during construction.

Work Windows:

The work to take place during one (1) weekend shutdown, the hours will be from 1:30 AM on Saturday to 4:00 AM on Monday.

Weekday work to be performed between trains from 9:30 PM to 1:30 AM.

Weekday non-revenue service is from 1:30 AM to 4:00 AM.

Special Events: Contractor to schedule the work around special events such as Rock N Roll Marathon, Padres, etc. and to coordinate with City and MTS projects.

SECTION 10
GENERAL CONSTRUCTION

10-1 GENERAL

Unless otherwise indicated, all system installation, testing, and construction workmanship shall conform to or exceed all regulations and codes indicated in Section 86-1.02, "Regulations and Code," of the Standard Specifications and the latest revisions of the regulations, codes and standards indicated herein.

NATIONAL:

1. AASHTO, American Association of State Highway and Transportation Officials
2. ACI, American Concrete Institute
3. ANSI/AWS D12.1, Reinforcing Steel Welding Code
4. ANSI/AASHTO/AWS D1.1
5. ANSI/NFPA-70, National Electric Code
6. APA, American Plywood Association
7. AREMA, American Railway Engineering and Maintenance-of-Way Association
8. ASTM, American Society for Testing and Materials
9. FCC, Part 15, Rules and Regulations, Private Land Mobile Services
10. FCC, Part 90, Rules and Regulations, Private Land Mobile Services
11. NESC, National Electric Safety Code
12. NFA-297, Guide on Principles and Practices for Communications Systems
13. NFPA-70E, Standard for Electrical Safety Requirements for Employee Workplaces
14. NFPA-71, Central Station Signaling Systems
15. NFPA-72, National Fire Alarm Code
16. NFPA-75, Protection of Electronic Computer Data Processing Equipment
17. NFPA-101, Life Safety Code
18. NFPA-130, Fixed Guideway Transit Systems
19. NFA-297, Guide on Principles and Practices for Communications Systems
20. SSPWC, Standard Specifications for Public Works Construction
21. TIA/EIA TSB67, Transmission Performance Specifications for Field Testing of Unshielded Twisted-pair Cabling Systems
22. Isolator for Metals Causing Electrolytic Action: Asphalt bitumen emulsion.

STATE:

The following General Orders (GO) of the California Public Utilities Commission of the State of California shall apply:

1. GO 26-D, Clearances of Railroads and Street Railroads as to Side and Overhead Structures, Parallel Tracks and Crossings
2. GO 52, Construction and Operating Power and Communication Lines for the prevention or Mitigation of Inductive Interference
3. GO 75-C, Protection of Crossings at Grade of Roads, Highways and Streets with Railroads
4. GO 95, Overhead Electric Line Construction
5. GO 118, Regulations Governing the Construction, Reconstruction, and Maintenance of Walkways Adjacent to Railroad Track and the Control of Vegetation Adjacent Thereto
6. GO 128, Construction of Underground Electric Supply and Communication Systems
7. GO 143-A, Rules for the Design, Construction and Operation of Light Rail Transit Systems including Streetcar Operations
8. State of California Electrical Safety Orders
9. Caltrans, California Department of Transportation Standard Plans and Specifications, 2006

10. California High Voltage Electrical Safety Orders
11. State of California Industrial Safety Orders
12. State of California Building Code (CBC)

LOCAL:

Standard Specification for Public Works Construction (SSPWC)

10-1.01 OBSTRUCTION AND UNDERGROUND FACILITIES

The Contractor's attention is directed to the existence of certain underground facilities that may require special precautions to be taken by the Contractor to protect the health, safety and welfare of workers and of the public. Facilities requiring special precautions include, but are not limited to: overhead electrical wires; conductors of petroleum products, oxygen, chlorine, and toxic or flammable gases; natural gas in pipelines greater than 6 inches in diameter or pipelines operating at pressures greater than 60 psi (gage); underground electric supply system conductors or cables either directly buried or in duct or conduit that do not have concentric neutral conductors or other effectively grounded metal shields or sheaths; and underground electrical grounded metal shields or sheaths; and underground electrical conductors with potential to ground more than 300 volts.

The Contractor shall notify the Engineer and the below stakeholders at least two working days, but not more than 14 calendar days, prior to performing any excavation or other work close to any underground pipeline, conduit, duct, wire or other structure:

Underground Service Alert (USA)	811
Sewer: City of San Diego Metro Waster (619) 292 – 6300 Water: City of San Diego Water	(619) 527 – 7482
Gas: San Diego Gas and Electric	(858) 636 – 6856
Phone: AT&T	(619) 266 – 4651
Cable: COX Cable	(619) 263 – 9251 ext. 5125
Fiber Optic: Sprint	(800) 659 – 9698
Cable Pipe and Leak Detection	(619) 873 – 1530
SANDAG Commute (Bike Lockers)	(619) 515 – 1177

The Contractor shall locate existing signal wires, track circuits, platform lighting cables, irrigation lines, Sprint, and other MTS underground facilities as necessary to complete the improvements without damage to existing facilities. The contractor shall have said facilities located and marked out by Cable, Pipe& Leak Detection (CPL) at (619) 873-1530 or other approved utility locating subcontractor familiar with MTS facilities. Any work on the underground facilities shall be coordinated with the Engineer. If the Contractor cannot protect in-place existing underground facilities, the Contractor shall replace any damaged or removed underground facilities in a timely manner as to not allow for extended delays to the trolley services. If the services are subject to extended delays, the Contractor shall notify MTS prior to the expiring of the original scheduled work time. All underground facilities located shall be as-built and included on the contractor’s as-built drawings.

The Contractor’s attention is directed to the existence of overhead power lines, energized trolley wires, catenary poles, signals and grade-crossing signals at the locations of work. Any one or a combination of these obstructions could exist at any one location. No obstructions shall be permitted within 10 feet of operating tracks.

Measurement and Payment:

No separate measurement will be made for the requirements of this section.

Full compensation for complying with the requirements of this section, including underground location services, not otherwise provided for, shall be considered as included in the contract prices paid for various items of work involved, and no additional compensation will be allowed therefore.

10-1.02 DUST CONTROL

Dust control shall conform to the Current Rules & Regulations of the County of San Diego Air Pollution Control District. However, the Contractor shall endeavor, whenever possible, to restrict the use of water to control dust for his convenience due to the current need to conserve water.

Measurement and Payment:

No separate measurement will be made for the requirements of this section.

Full compensation for complying with the requirements of this section shall be considered as included in the contract prices paid for the various items of work involved, and no additional compensation will be allowed therefore.

10-1.03 DEVELOP WATER SUPPLY

Contractor is responsible for developing their own water supply. Existing LRT station water supply system shall not be used for construction purposes.

Measurement and Payment:

No separate measurement will be made for the requirements of this section.

Full compensation for complying with the requirements of this section shall be considered as included in the contract prices paid for the various items of work involved, and no additional compensation will be allowed therefore.

10-1.04.A CONSTRUCTION AREA LIGHTING

During the hours of darkness, all working areas utilized by the Contractor to perform work shall be lighted to conform to the minimum illumination intensities established by California Division of Occupational Safety and Health Construction Safety Orders.

All lighting fixtures shall be mounted and directed in a manner precluding glare to approaching traffic and shall not be directed parallel to the track to avoid interfering with the vision of the train crews. In addition, lighting fixtures shall not obscure any railroad signals.

Measurement and Payment:

No separate measurement will be made for the requirements of this section.

Full compensation for complying with the requirements of this section shall be considered as included in the contract prices paid for the various items of work involved, and no additional compensation will be allowed therefore.

10-1.04 PROJECT APPEARANCE

The Contractor shall maintain a neat appearance to the work at all times. In any area visible to the public, the following shall apply:

Broken concrete and debris developed during construction operations shall become the property of the Contractor and be disposed of concurrently with its removal. No stockpiling of demolition materials or debris will be permitted within the MTS Right-of-Way.

Measurement and Payment:

No separate measurement will be made for the requirements of this section.

Full compensation for complying with the requirements of this section, not otherwise provided for, shall be considered as included in contract prices paid for the various items of work involved, and no additional compensation will be allowed therefore.

10-1.05 WASTE MANAGEMENT

SOLID WASTE

Do not allow litter or debris to accumulate anywhere on the platform, including storm drain grates, concrete debris, construction materials, trash racks, and ditch lines. All products to be included in the construction shall not be stored on the platform. All material must be stored at ground level. Pick up and remove trash and debris from the platform daily. Contractor must monitor solid waste storage and disposal procedures on the job site.

Furnish enough closed-lid dumpsters of sufficient size to contain the solid waste generated by work activities. When refuse reaches the fill line, empty dumpsters. Dumpsters must be watertight. Do not wash out dumpsters at the job site. Furnish additional containers and more frequent pickup during the demolition phase of construction.

Solid waste includes:

1. Brick
2. Mortar
3. Timber
4. Metal scraps
5. Sawdust
6. Pipe
7. Electrical cuttings
8. Non-hazardous equipment parts
9. Styrofoam and other packaging materials
10. Vegetative material and plant containers from highway planting
11. Litter and smoking material, including litter generated randomly by the public
12. Other trash and debris

Furnish and use trash receptacles on in the platform job site yard, field trailers, and locations where workers gather for lunch and breaks.

HAZARDOUS WASTE

For hazardous material encountered in excavation, the Contractor is directed to Section 10-5.04, “Hazardous Waste In Excavation,” of these Special Provisions.

Use hazardous waste management practices if waste is generated on the job site from these substances:

1. Petroleum products
2. Asphalt products
3. Concrete curing compound
4. Pesticides
5. Acids
6. Paints
7. Stains
8. Solvents
9. Wood preservatives
10. Roofing tar
11. Road flares
12. Lime
13. Glues and adhesives
14. Materials classified as hazardous by California Code of Regulations, Title 22, Division 4.5; or listed in CFR Title 40, Parts 110, 117, 261, or 302

CONCRETE WASTE

Use practices to prevent the discharge of portland cement concrete, AC, or HMA waste into storm drain systems or watercourses.

Collect and dispose of portland cement concrete, AC, or HMA waste at locations where:

1. Concrete material, including grout, is used
2. Concrete dust and debris result from demolition
3. Sawcutting, coring, grinding, grooving, or hydro concrete demolition of Portland cement concrete, or HMA creates a residue or slurry
4. Concrete truck or other concrete-coated equipment is cleaned at the job site

SANITARY AND SEPTIC WASTE

Do not bury or discharge wastewater from sanitary or septic systems within MTS right of way. Contractor must inspect sanitary or septic waste storage and monitor disposal procedures at least weekly. Sanitary facilities that discharge to the sanitary sewer system must be properly connected and free from leaks. Place sanitary facilities at least 50 feet away from storm drains, watercourse, and flow lines.

Obtain written approval from local health agency, city, county, and sewer district before discharging from a sanitary or septic system directly into a sanitary sewer system, and submit a copy to the Engineer. Comply with local health agency provisions while using an on-site disposal system.

LIQUID WASTE

Use practices to prevent job site liquid waste from entering storm drain systems or watercourses. Liquid wastes include the following:

1. Drilling slurries or fluids
2. Grease-free or oil-free wastewater or rinse water
3. Dredgings, including liquid waste from drainage system cleaning
4. Liquid waste running off a surface including wash or rinse water
5. Other non-storm water liquids not covered by separate permits

Hold liquid waste in structurally sound, leak proof containers such as:

1. Roll-off bins
2. Portable tanks

Liquid waste containers must be of sufficient quantity and volume to prevent overflow, spills and leaks.

Store containers:

1. At least 50 feet from moving vehicles and equipment
    2. If within the floodplain, at least 100 feet from concentrated flows of storm water, drainage courses, watercourses, or storm drain inlets unless approved
    3. If outside the floodplain, at least 50 feet from concentrated flows of storm water, drainage courses, watercourses, or storm drain inlets unless approved

Remove and dispose of deposited solids from sediment traps under "Solid Waste" unless the Engineer authorizes another method.

Liquid waste may require testing to determine hazardous material content before disposal.

Drilling fluids and residue must be disposed of outside the MTS right of way.

If an approved location is available within the job site, fluids and residue exempt under California Code of Regulations, Title 23, Section 2511(g) may be dried by evaporation in a leak proof container. Dispose of remaining solid waste under "Solid Waste" of these special provisions.

Measurement and Payment:

No separate measurement will be made for the requirements of this section.

Full compensation for waste management shall be considered included in the contract prices paid for the various items of work requiring waste management and no additional compensation will be allowed therefore.

10-1.06 CONTRACTOR STORAGE AND LAYDOWN AREA

The Contractor shall be responsible for arranging for storage of materials and securing laydown area.

[redacted] – NOT USED

The Contractor will be permitted to temporarily store track materials within the MTS right-of-way adjacent to the work, subject to the following:

1. Track material (except rail) shall be brought onto the site on a daily basis in sufficient quantity to complete construction operations on that day. Any excess materials shall be removed from the right-of-way daily.

2. Rail shall be brought onto the site and stored as indicated in Section 11, “Trackwork.”

3. Track materials (i.e., rails and crossties) shall be bundled or stacked neatly and crosstie clips, pads, insulators, tie plates, rail anchors, and spikes shall be stored in suitable containers, etc.

4. Access must be maintained at all times to the entrance to the Trolley stations, and parking areas adjacent to the MTS right-of-way.

5. Track materials shall be located so as not to encroach within the CPUC required clearances from

operating tracks.

6. Laydown space must be fenced off and secured by the contractor.

7. Excess materials shall be removed from the right-of-way as soon as feasible after they are determined not required in the work.

Measurement and Payment:

No separate measurement will be made for the requirements of this section.

Full compensation for complying with the requirements of this section shall be considered as included in the contract prices paid for the various items of work involved, and no additional compensation will be allowed therefore.

10-1.07 SITE CONDITIONS AND ACCESS

Contractor shall arrange a meeting on-site with the Engineer a minimum of 48 hours in advance of the start of construction at each work location and any adjacent in the vicinity of the work and examine the job-site areas and conditions under which work of this section will be performed. The Contractor shall notify the Engineer in writing, within 24 hours following the on-site meeting, of all discrepancies between the existing site conditions and those shown on the contract drawings. Contractor's failure to provide written notification to the Engineer will indicate that no discrepancies exist.

All project sites are accessible through public right of way.

Contractor is to maintain access to adjacent properties at all times. Disruption to these business activities shall be kept to a minimum. The contractor shall communicate in advance with each property owner/tenant affected by its operations prior to the start of work. In addition, the contractor shall maintain a proactive relationship with the area merchants and inform them weekly of the construction schedule to assure that impacts to their businesses are kept at a minimum throughout the contract period.

Measurement and Payment:

No separate measurement will be made for the requirements of this section.

Full compensation for complying with the requirements of this section shall be considered as included in the contract prices paid for the various items of work involved, and no additional compensation will be allowed therefore.

10-1.08 PROTECTION OF EXISTING FACILITIES

- Preservation of Property

Contractor shall maintain access to adjacent properties at all times. Disruption to these business activities shall be kept to a minimum.

The Contractor shall communicate in advance with each property owner/tenant affected by its operations prior to the start of work. In addition, the contractor shall maintain a proactive relationship with the area merchants and inform them weekly of the construction schedule to assure that impacts to their businesses are kept at a minimum throughout the contract period. Costs for this communication effort shall be considered included in the various items of work.

1. Protection

The Contractor shall protect existing work which is to remain in place, that is to be reused, or which is to remain the property of the owner by temporary covers, shoring, bracing, and supports. Items

which are to remain or are to be salvaged which are damaged during performance of work shall be repaired to their original condition or replaced with new by the Contractor at no additional cost to the owner. Do not overload structural elements. Provide new supports and reinforcement for existing construction weakened by demolition or removal work.

The Contractor shall protect all services and utilities which are to remain. Where removal of existing utilities and pavement is specified or indicated, provide approved barricades, temporary covering of exposed areas, and temporary services or connections for electrical utilities.

Measurement and Payment:

Full compensation for complying with the requirements of this section shall be considered as included in the contract prices paid for the various items of work involved, therefore no additional compensation will be allowed.

10-1.09 SOUND CONTROL

The Contractor will be required to limit construction noise according to the San Diego City Municipal Code. Details are available at the San Diego City website. http://www.sandiego.gov/nccd/noise

For any night work, the Contractor will be required to obtain a Noise Permit from the City of San Diego, Development Services (telephone 619-446-5000).

Specifically, the Contractor shall limit noise during operations near residential buildings and during night and weekend construction. Permits may be required from the City of San Diego in order to be in compliance with local laws. The Contractor shall acquire all necessary permits and shall coordinate with all businesses and residences as needed to keep construction noise to a minimum.

Measurement and Payment:

No separate measurement will be made for the requirements of this section.

Full compensation for complying with the requirements of this section, including obtaining any permits required, shall be considered as included in the contract prices paid for various items of work involved and no additional compensation will be allowed therefore.

10-1.10 CONSTRUCTION SURVEYING

All field construction surveying required for accurate location of the various items of work on the contract shall be furnished by the Contractor. For track rehabilitation, the elevation and alignment of the new track shall, generally, be based on the location of the existing tracks as indicated on the plans. The Contractor shall provide the Engineer with the location and elevation of the existing track extending 100 feet beyond the project limits of any new Track Construction. The contractor must not go above 8” below the top of platform for any new Track Construction within station areas.

Construction staking shall be in conformance with Chapter 12 of the Caltrans Surveys Manual, dated September 2006. Legible copies of all construction operations staking sheets shall be provided to the Engineer two days before construction work is started at each location.

All field construction surveying required for accurate location and the construction of the various items of

work under the contract shall be performed and furnished by the Contractor.

Prior to beginning construction operations in the field, the Contractor shall tie out all such project control monuments for use in reconstructing project control monuments lost or disturbed during construction. Survey notes of control ties shall be submitted to the Engineer prior to starting construction operations in

the field.

The Contractor shall notify the Engineer, in writing, 24 hours in advance of any construction staking.

The Contractor shall be responsible for preparing and filing with the San Diego County Surveyor a Corner Record of the references to existing monuments within the area of each street or highway to be reconstructed under this contract, prior to any reconstruction, as required by Section 8771 of the Business and Professions Code (January 1, 1995).

The Contractor shall also replace all disturbed existing property corner markers, monuments, and local agencies' well monuments disturbed during construction operations. These new markers, monuments, and well monuments shall be documented by a record of survey map or corner record prepared in accordance with Section 8771 of the Business and Professions Code and all applicable laws and regulations, and filed in the Office of the County Recorder of San Diego County at the Contractor's expense.

Measurement and Payment:

No separate measurement will be made for the requirements of this section.

Full compensation for furnishing all construction surveying, replacing all existing property corners, monuments and well monuments, filing and recording necessary record of survey maps and layout of the work shall be considered as included in the contract prices paid for the various items of work, and no additional compensation will be allowed therefore.

10-1.11 SUBMITTALS

Submit manufacturers' catalog data, cut sheets, and certifications as appropriate for all contractor furnished materials for approval by the Engineer.

The contactor shall submit a complete list of required submittals for approval by the Engineer.

Measurement and Payment:

No separate measurement will be made for the requirements of this section.

Full compensation for complying with the requirements of this section shall be considered as included in the contract prices paid for various items of work involved and no additional compensation will be allowed therefore.

10-1.12 COORDINATION

The Contractor shall coordinate and schedule the loading, hauling, unloading, and setting of the material and equipment with the Engineer. The Contractor shall be responsible for preparing plans for traffic detours and obtaining permits to move oversized material and equipment on roads and highways. It is the contractors responsibility to get equipment on and off the track.

Measurement and Payment:

No separate measurement will be made for the requirements of this section.

Full compensation for complying with the requirements of this section shall be considered as included in the contract prices paid for various items of work involved and no additional compensation will be allowed therefore.

10-1.13 PERMITS AND RIGHT-OF-WAY REQUIREMENTS

All permits and rights-of-way needed for performance of the Work shall be obtained by the Contractor.

Measurement and Payment:

No separate measurement will be made for the requirements of this section.

Full compensation for complying with the requirements of this section shall be considered as included in the contract prices paid for various items of work involved and no additional compensation will be allowed therefore.

10-1.14 GROUND WATER AND DEWATERING

Work shall consist of dewatering as needed for the various items of work shown on the plans and as specified in these Special Provisions.

The Contractor shall note that a current environmental site assessment has not been performed and a potential for ground water contamination might exist.

Information regarding discharges to the City of San Diego sanitary sewer system can be obtained by contacting Chris Donaldson at (858) 654-4119.

NPDES discharge requirements are contained in RWQCB Order 95-25, NPDES NO. CAG919001, "General Waste Discharge Requirements for Groundwater Extraction and Similar Waste Discharges to San Diego Bay and Storm Drains or Other Conveyance Systems Tributary Thereto."

Both agencies require time to review the discharge authorization requests. The Contractor is responsible for obtaining permits, pumping and treating water and discharge monitoring. The Contractor shall discharge at all times in compliance with the discharge authorization. Treated water and discharge volumes shall be measured using a totalizing flow meter.

Measurement and Payment:

Measurement of work performed under this section shall be per the provisions of Section 12-1, "Extra Work" of the Standard Specifications.

Payment for dewatering, including treatment of extracted groundwater prior to discharge, permits, analysis, pumping, and discharge fees will be made in accordance with the provisions of Section 12-1, "Extra Work," of the Standard Specifications.

10-2 MOBILIZATION

Staging and stockpiling of equipment and materials shall be within the limits of work as shown on the plans, unless said otherwise.

Measurement and Payment:

No separate measurement will be made for the requirements of this section.

Full compensation for complying with the requirements of this section shall be considered as included in the contract prices paid for the various items of work involved, and no additional compensation will be allowed therefore.

10-3 CONSTRUCTION AREA WORK PLAN

10-3.01 GENERAL

All phases of construction shall maintain minimum operational standards.

10-3.02 TRAFFIC CONTROL PLAN

The Contractor shall prepare Traffic Control Plans with elements and zone devices in accordance with Part 6 of the California MUTCD, 2010 edition and these Special Provisions. Traffic Control for striping within the city rights of way shall be in accordance with the California MUTCD, 2010 edition and the requirements of the appropriate jurisdiction.

The work shall consist of the Contractor preparing and obtaining approval of Traffic Control Plans as required by the governing agency or agencies, before doing any work within any city street right-of-way, placing and removing of traffic and pedestrian control devices, placing any temporary striping required, placing any permanent striping or markings damaged or removed during construction and working within the MTS Right-of-Way. The Traffic Control Plans shall comply with requirements set forth by the governing agency or agencies regarding types of plan submittals, information shown about sign types, sign placement, traffic phasing, detours, street closings, removals, etc.

The Contractor shall submit the draft Traffic Control Plan to the Engineer for review ten calendar days prior to submittal to the appropriate permitting agency. The Contractor shall circulate copies of the traffic control plans to the permitting agency and any third parties as required by the permitting agency. Some jurisdictions, require the Contractor to obtain City Council approval of road closures; the Contractor shall plan accordingly. Contractor shall be responsible for contacting governing public agency or agencies to determine required processing time. Contractor shall submit traffic control plans to avoid project delays. Upon receipt, a copy of the approved traffic control plan shall be submitted to the Engineer.

The Contractor shall maintain all temporary access facilities in a safe and neat condition from the time of installation to the time of removal. If any component in the traffic control system is displaced, or ceases to operate or function as specified, from any cause, during the progress of the work, the Contractor shall immediately repair said component to its original condition or replace said component and restore the component to its original location.

Any existing permanent striping that is damaged during construction shall be restored to its original state and layout. Until the permanent striping is replaced, the Contractor shall install temporary construction area traffic control. The work performed in connection with replacing the striping shall conform to the provisions in Section 84, “Traffic Stripes and Pavement Markings,” of the Standard Specification and to Drawing A20B of the Standard Plans.

Personal vehicles of the Contractor's employees shall not be parked within the railway right of way including any section closed to public traffic, except personal vehicles used in lieu of the Contractor's equipment.

The Contractor's equipment or personal vehicles used in lieu of the Contractor's equipment, and marked with permanent or temporary name plates identifying contracting firm, may park in the area of construction but only during construction operation hours.

When leaving a work area and entering a roadway or railway carrying public traffic or rail traffic, the Contractor's equipment, whether empty or loaded, shall in all cases yield to public traffic or rail traffic.

Equipment, material, or debris shall not be stored or remain in the public right of way without prior acceptance by the Engineer.

When work is in progress in a trench or other excavation adjacent to the traveled way, portable delineators, conforming to Section 12-3.04, "Portable Delineators," of the Caltrans Standard Specifications, shall be placed on the edge of pavement. At other times, the portable delineators shall be placed off and adjacent to the edge of pavement. The portable delineators shall be placed as necessary

for proper delineation. The spacing between delineators shall not exceed 50 feet on tangents or 25 feet on curves.

Whenever traffic is permitted over or adjacent to trenches or other depressions, the Contractor shall furnish and maintain temporary steel plate bridging with a non-skid surface unless other means of protecting the public and the work are expressly approved by the Engineer.

Steel plates used for bridging shall extend 12 in. beyond the edges of trenches.

Steel plates (A-36 grade steel, designed for HL-93 truck loading per the AASHTO LRFD Bridge Design Specifications with California Amendments) shall conform to the following minimum thickness.

Trench Width	Minimum Plate Thickness
10 in.	1/2 in.
23 in.	3/4 in.
2 ft- 7 in.	7/8 in.
3 ft- 5 in.	1 in.
5 ft- 3 in.	1 3/4 in.

Note: For spans greater than 5 ft- 3 in., The Contractor shall have a California Registered Civil Engineer prepare and submit a structural design as specified under Section 5-1.4, “Submittals” of these Special Provisions.

Trenches shall be adequately shored, per Section 629 of the California Department of Transportation’s Encroachment Permits Manual, to support bridging the traffic loads.

Where steel plates are used for bridging, the contractor shall provide asphalt concrete tapers, utilizing cold planing to provide adequate depth to adequately feather the asphalt to the edges of the plates. A “Rough Road” sign (W33), with black lettering on an orange background shall be used in advance of steel plate bridging in addition with any other required construction signage.

Minor deviations from the requirements of this section which do not significantly change the cost of the Work may be permitted upon the written request of the Contractor if, in the opinion of the Engineer, public traffic or rail traffic will be better served and the Work expedited. Such deviations shall not be adopted until the Engineer has indicated his approval in writing. All other modifications will be made by contract change order.

Measurement and Payment:

No separate measurement will be made for the requirements of this section.

Full compensation for complying with the requirements of this section shall be considered as included in the contract prices paid for various items of work involved and no additional compensation will be allowed therefore.

10-3.03 FLAGGING

Flaggers to provide traffic control of public traffic through the work areas shall be ATSSA certified.

Measurement and Payment:

No separate measurement will be made for the requirements of this section.

Full compensation for complying with the requirements of this section shall be considered as included in the contract prices paid for various items of work involved and no additional compensation will be allowed therefore.

10-4 ABANDONMENT, DEMOLITION, REMOVAL, DISPOSAL, AND RECONSTRUCTION OF EXISTING FACILITIES

10-4.01 DESCRIPTION OF WORK

Certain existing improvements shall be abandoned, demolished, removed, disposed, stored, salvaged, reconstructed, and/or relocated as shown on the plans. See Section 11-3, “Track and Ballast Removal and/or Salvage” of these Special Provisions for track and ballast removal.

The Contractor shall be responsible for obtaining all necessary permits and approvals for accomplishing all removal and disposal operations. Unless otherwise stipulated, all materials resulting from the removal of obstructions shall become the property of the Contractor at the place of origin and shall be disposed of by the Contractor in conformance with all laws, regulations and rules legally imposed on such activities. All existing facilities removed or demolished shall be immediately loaded into trucks and removed from the site. No stockpiling of said materials shall occur on site without the express approval of the Engineer.

The Contractor shall not dispose of the improvements or materials there from by sale, gift, or in any manner whatsoever to the general public at the site, provided however that this provision shall not be construed as limiting or prohibiting the sale or disposal of such improvements or materials at the site to duly licensed contractors, and provided that the Contractor verifies that all such materials have been removed from the site.

The Contractor is encouraged to separate asphalt pavement and provide to sites for use in recycled asphalt pavement preparation. The Contractor is encouraged to use recycling as a method of disposal whenever possible.

10-4.02 PROTECTION OF TREES

Trees within the project site shall not be damaged during demolition. Only trees that are identified to be removed shall be removed, all others shall be protected in place, unless otherwise directed by the Engineer.

All trees that are to remain that are damaged during the work under this contract shall be replaced in kind unless otherwise approved by the Engineer.

Measurement and Payment:

No separate measurement will be made for the requirements of this section.

Full compensation for protection of existing trees shall be considered included in the contract price paid for various items of demolition work and no additional compensation will be allowed therefore.

10-4.03 REMOVAL AND DISPOSAL OF EXISTING FACILITIES

Disposal of existing facilities includes demolition, removal, and disposal of various existing facilities as shown on the plans, all as required for construction of new facilities.

Items to remain that are damaged during demolition shall be repaired or replaced as directed by the Engineer at no cost to the Owner.

A. Remove Existing Sidewalk and Subgrade

Existing concrete sidewalk, base and subgrade, shall be removed as shown on the Plans. Concrete shall be removed without damaging portions of existing concrete to remain in place by

sawcutting the concrete at the limits of removal shown on the Plans or ordered by the Engineer. Removal shall be to a depth to allow for the installation of the proposed sidewalk as indicated in the drawings.

Existing manhole frames and covers, valve boxes and vaults, and other facilities to remain in place shall be protected and preserved.

Existing sidewalk, base and subgrade identified to be removed as part of track removal shall be performed in accordance with Section 11-3, “Track and Ballast Removal” of these special provisions.

Measurement and Payment:

No separate measurement will be made for the requirements of this section.

Full Compensation for removing and disposing of existing sidewalk and subgrade shall be included in the contract unit price paid for under “Remove Existing Track, Vehicular Crossing,” therefore no separate payment will be made.

B. Remove Existing Concrete Pavement

Concrete shall be removed without damaging portions of existing concrete to remain in place by sawcutting the concrete at the limits of removal shown on the Plans or ordered by the Engineer.

Demolition shall consist of performing all work necessary to demolish, remove and dispose of existing concrete pavement, all as shown on the plans and specified in the Standard Specifications and these Special Provisions, and as directed by the Engineer, and for doing all the work that may be required to construct and maintain the facilities within the limits of work.

The joint between any surfacing to be removed and surfacing which is to remain in place shall be cut to a neat line with a power-driven saw to full depth prior to removal operations. Residue from saw cutting operations shall be removed from the pavement surface by vacuuming or other approved method and shall not be allowed to flow across the pavement nor be left on the surface of the pavement. Residue from saw cutting operations shall be disposed of outside the project right-of-way.

Existing concrete pavement identified to be removed as part of track removal shall be performed in accordance with Section 11-3, “Track and Ballast Removal” of these special provisions.

Existing manhole frames and covers, valve boxes and vaults, and other facilities to remain in place shall be protected and preserved.

Measurement and Payment:

No separate measurement will be made for the requirements of this section.

Full Compensation for removing and disposing of existing concrete pavement shall be included in the contract unit price paid for under “Remove Existing Track, Vehicular Crossing,” therefore no separate payment will be made.

C. Remove Existing Asphalt Concrete (AC) Pavement

Existing AC pavement shown on the plans to be removed shall be sawcut and removed to a depth of at least 12 inches below the grade of the existing surfacing. Resulting holes and depressions shall be backfilled with earthy material selected from excavation to the lines and

grade established by the Engineer.

The joint between any surfacing to be removed and surfacing which is to remain in place shall be cut to a neat line with a power-driven saw to full depth prior to removal operations. Residue from saw cutting operations shall be removed from the pavement surface by vacuuming or other approved method and shall not be allowed to flow across the pavement nor be left on the surface of the pavement. Residue from saw cutting operations shall be disposed of outside the project right-of-way in conformance with the provisions in Section 15-2.03, "Disposal," of the Standard Specifications.

Existing manhole frames and covers, valve boxes and vaults, and other facilities to remain in place shall be protected and preserved.

Existing AC pavement identified to be removed as part of track removal shall be performed in accordance with Section 11-3, “Track and Ballast Removal” of these special provisions.

Measurement and Payment:

No separate measurement will be made for the requirements of this section.

Full Compensation for removing and disposing of existing asphalt concrete (AC) pavement shall be included in the contract unit price paid for under “Remove Existing Track, Vehicular Crossing,” therefore no separate payment will be made.

[redacted]

[redacted]

[redacted]

[redacted] – NOT USED

10-4.04 SALVAGE EXISTING FACILITIES

10-4.04.1 GENERAL

All material scheduled for removal shall be subject to return to MTS for storage and reuse, as directed by the Engineer, unless otherwise specified herein. The Contractor shall not damage or destroy this material and shall protect all salvaged material during the demolition and removal work. The Contractor shall not reuse any removed material without the Engineer’s written approval. The Contractor shall return and transport all material designated for salvage, together with a bill of material, to the Wright Street yard or another approved MTS storage location as directed by the Engineer. In the case of items to be salvaged to another entity, the Contractor shall make arrangements for the removal of those items to a location and in a manner acceptable to that entity prior to removal.

Existing facilities to be salvaged shall be immediately loaded onto trucks and removed to their predetermined salvage location. No stockpiling of said materials shall occur on MTS property without the expressed approval of the Engineer.

Items to remain that are damaged during demolition shall be repaired or replaced as directed by the Engineer at no cost to the Owner. Items to be salvaged that are damaged during removal shall be

repaired or replaced as directed by the Engineer at no cost to the Owner.

10-4.05 EXISTING SURVEY MONUMENTS

There are survey monuments that will be impacted by the proposed construction activities. Several of these monuments are brass disks that are a part of the Record of Survey Map No. 15487 as prepared by Philip J. Gurbino (LS 4424) of Berggren and Associates on April 17, 1997 and recorded in San Diego County on April 18, 1997, file no. 97.180859. There may be other existing monuments. The Contractor shall be responsible for any monuments and benchmarks which will be disturbed or destroyed by construction activities associated with this project. The Contractor shall have a licensed Land Surveyor or Registered Civil Engineer authorized to practice Land Surveying, reference and replace such points with appropriate survey monuments. A corner record or record of survey, as appropriate, shall be filed by the licensed Land Surveyor or Registered Civil Engineer as required by the Land Surveyors Act.

Measurement and Payment:

No separate measurement shall be made for the requirements of this section.

The labor, materials, tools, equipment, and costs associated with identifying impacted monuments, removing existing monuments, referencing, replacing monuments complete in place and filing a corner record or record of survey shall be considered incidental to the proposed construction associated with this project and no additional compensation shall be provided therefore.

10-5 EARTHWORK

10-5.02.A GENERAL

Earthwork beneath the track section shall be in accordance with Section 11, “Trackwork,” of these Special Provisions.

Contractor shall proof-roll the exposed subgrade with heavy equipment as directed by the Engineer. Where, in the opinion of the Engineer, the existing subgrade material is not suitable or yields, the subgrade shall be over-excavated and replaced with Class 2 aggregate over an approved subgrade enhancement geotextile to a minimum depth of 1 foot and a maximum depth of 2 feet or as determined by the Engineer.

10-5.02.B ROADWAY EXCAVATION

Roadway excavation shall include the removal of existing material to the elevations required for the proposed pavement sections as shown in the plans; removal, disposal or stockpiling of material excavated as required, including existing pavements; subgrade preparation; re-use of excavated material; placement and compaction of re-used material or aggregate subbase to the required elevations shown in the plans and in accordance with the Standard Specifications and these Special Provisions.

Structure Excavation and Backfill shall comply with the Standard Specifications and Section 10-5.03 of these Special Provisions.

Roadway Excavation (Track)

In the areas of track construction, the Contractor shall excavate beyond the limits of existing ballast which is required to achieve the new track section shown in the plans.

Some site soils have little cohesion. These materials may be prone to caving in drilled holes and the Contractor should anticipate the need to mitigate caving during construction. Over-excavation called out in the plans shall be considered roadway excavation.

Excavated soils may be re-used as compacted subgrade material provided they are suitable per the requirements of these Special Provisions. Excavated materials may be re-used as compacted subgrade provided they are free from organic material, contaminated material, clay lumps and rocks or debris greater than 4 inches in diameter. Excavation into cobble soils may generate oversized materials that may not be suitable for use as backfill. These may be broken into pieces that are 4 inches or smaller in diameter or disposed of offsite. Fill materials shall be free from organic and otherwise deleterious materials. Fill materials shall be free from environmental contamination. Unsuitable material shall become the property of the Contractor and shall be legally disposed of, offsite. See Section 10-5.02 C for subgrade preparation.

Compacted subgrade material may consist of re-used excavated material and/or aggregate subbase and shall be placed in horizontal lifts of approximately 8 inches in loose thickness. Prior to placing compacted subgrade material, the Contractor shall have it field tested to determine the laboratory optimum moisture content. Prior to compaction, each lift shall be watered or dried as needed to achieve a moisture content generally near the laboratory optimum, mixed, and then compacted by mechanical methods to 95 percent of its modified Proctor density as evaluated by ASTM D 1557. Successive lifts shall be treated in a like manner until the desired compacted sub-grade elevations are achieved.

In sidewalk areas, the Contractor shall place compacted sub-grade to the elevation of the underside of the crushed aggregate base as shown in the plans, details and cross-sections.

Measurement and Payment:

“Roadway Excavation (Track)” shall be included in the contract unit price paid for under “Remove Existing Track, Vehicular Crossing,” therefore no separate payment will be made.

The contract prices paid shall include full compensation for furnishing all labor, materials, tools, equipment, and incidentals for doing all the work involved in excavating existing surface and sub-grade material to the lines and grades indicated in the plans and specified in these special provisions; removal, disposal or stockpiling of material as required, including existing pavements; re-use of excavated material as compacted subgrade; subgrade preparation; placement and compaction of re-used material or aggregate subbase to the required elevations shown in the plans and in accordance with the Standard Specifications and these Special Provisions and legally disposing of all surplus excavated material. No additional compensation shall be provided there for.

10-5.02.C SUBGRADE PREPARATION

After demolition, clearing and grubbing, removal of existing paved areas, over-excavation of the native material to the depth specified as described above but prior to the placement of subgrade enhancement geotextile and compacted fill, the exposed ground surface shall be scarified to a depth of approximately 8 inches and watered or dried, as needed, to achieve moisture contents near the laboratory optimum. The scarified materials shall then be compacted to a minimum 90 percent of their modified Proctor density as evaluated in accordance with American Society for Testing and Materials (ASTM) test method D 1557. Prior to placement of additional compacted fill material following a delay in the grading operations, the exposed surface of previously compacted fill should be prepared to receive fill. Preparation may include scarification, moisture conditioning, and re-compaction.

Where the grade is too low as a result of the removal of excavated materials that are unsuitable for reuse as fill or as a result of buried manmade structures discovered during excavation and needing removal as determined by the Engineer, Class 2 Aggregate Base shall be added until the appropriate grade is met. The Engineer will direct corrective work and such ordered work will be paid for as extra work as provided in Section 12-1, “Extra Work,” of the Standard Specifications.

Should the R-Value of the upper 6 inches of the exposed subgrade (upon which base and sub-base

materials are to be placed) be less than 10, as determined by the Engineer, the Engineer will review and determine the necessary modifications to subgrade and/or structural section. If a structural section change is necessary, then the Engineer will direct corrective work and such ordered work will be paid for as extra work as provided in Section 12-1, “Extra Work,” of the Standard Specifications.

Measurement and Payment:

Full compensation for scarifying and compacting existing sub-grade material, furnishing labor, materials, equipment, tools, and incidentals for doing all work involved in subgrade preparation shall be included in the contract price unit price paid for under “Construct New Track, Vehicular Crossing,” therefore no separate payment will be made.

10-5.02.D SURPLUS MATERIAL

Surplus excavated material not designated or determined to contain aerially deposited lead shall become the property of the Contractor and shall be disposed of offsite. Surplus material shall not be disposed of in any MTS or public street right of way.

Surplus excavated materials determined to contain aerially deposited lead or other hazardous materials, which have special requirements for disposal, shall be disposed of in accordance with

Section 10-5.03, “Hazardous Waste in Excavation,” of these special provisions.

Measurement and Payment:

Disposal of surplus excavated material, not re-used for fill shall be included in the price paid item for Roadway Excavation. No separate payment shall be made therefore.

10-5.02.E ADDITIONAL WORK

Measurement and payment for additional required excavation above and beyond what is depicted in the construction plans as directed by the Engineer shall be in accordance with the provisions in Section 12-1, “Extra Work,” of the Standard Specifications.

10-5.03 HAZARDOUS WASTE IN EXCAVATION

General

The Contractor is solely responsible for testing, and for investigating and performing remedial actions on all hazardous materials and other related environmental requirements located on the Project site. Any hazardous materials that are encountered beyond those described in the Contract Documents or Proposal requirements, or which reasonable could not have been discovered within the time permitted, may properly be the subject of a change order request. MTS agrees that the Contractor cannot be cannot be considered a hazardous material generator. Of any such materials in existence on the Site at the time it is given possession of the site.

Measurement and Payment:

Measurement and payment for hazardous waste excavation above and beyond what is depicted in the construction plans as directed by the Engineer shall be in accordance with the provisions in Section 4.32, “Changes and Extra Work,” of the Standard Specifications.

10-5.04 TRENCH EXCAVATION AND BACKFILL

Open trenches and excavations shall be covered or barricaded to protect the general public and workers in accordance with Section 10-2, “Traffic Control Plan,” of these Special Provisions. Open trenches intraffic areas shall be covered with traffic rated trench plates or otherwise be adequately barricaded. After excavation, trenches shall promptly have conduits installed and then be backfilled.

Trench excavation and shoring requirements adjacent to the existing rail shall comply with Section 7.0, “Railroads,” of the Caltrans’ California Trenching and Shoring manual to determine railroad live loading lateral pressure for shoring design (Chart 3.6, LATERAL PRESSURE FOR COOPER RAILROAD LIVE LOAD). The shoring in areas where freight trains do not operate over or alongside trolley tacks shall be designed to accommodate LRV loads as shown in the LRV Loading Diagram of MTDB’s LRT Design Criteria. All shoring within a 1 to 1 influence line from the end of the railroad ties shall be designed for a minimum Cooper E-80 load per bogie/axel.

Measurement and Payment:

No separate measurement will be made for the requirements of this section.

Full compensation for excavating and backfilling shall be considered included in the contract prices paid for the various related items of work and no separate payment will be made therefore.

10-6 NOT USED

10-7 NOT USED

10-8 NOT USED

10-9 TRAFFIC STRIPES, PAVEMENT MARKINGS AND SIGNAGE

10-9.01 THERMOPLASTIC TRAFFIC STRIPES AND PAVEMENT MARKINGS

Thermoplastic material for traffic stripes shall be applied at a minimum thickness of 0.1 inch.

The location and type of new pavement markings shall, generally, be based the existing pavement markings within the Vehicular Grade Crossing construction limits.

Where striping joins existing striping, as shown on the plans, the Contractor shall begin and end the transition from the existing striping pattern into or from the new striping pattern a sufficient distance to ensure continuity of the striping pattern.

Measurement and Payment:

No separate measurement will be made for the requirements of this section.

Thermoplastic Traffic Stripes and Pavement Markings shall be measured and paid for under “Construct New Track, Vehicular Crossing,” therefore no separate payment will be allowed.

10-9.02 PAVEMENT MARKERS

Pavement markers shall, generally, be based the existing pavement markings within the Vehicular Grade Crossing construction limits.

Measurement and Payment:
No separate measurement will be made for the requirements of this section.

Pavement Markers shall be measured and paid for under “Construct New Track, Vehicular Crossing,” therefore no separate payment will be allowed.

10-10 SUBBASES AND BASES

10-10.01 DESCRIPTION OF WORK

The work in this section includes aggregate base backfill materials.

10-10.02 AGGREGATE BASE

This work shall consist of furnishing and placing aggregate base as shown on the Plans and where determined necessary by the Engineer.

Contractor shall utilize Class 2 aggregate base below the StarTrack Support System Units, as shown in the project details.

All new Asphalt Concrete, and Concrete Sidewalk shall be placed on top of new Class 2 Aggregate Base or Track Ballast as shown in the project details.

Aggregate base shall be Class 2. Full compensation shall include furnishing labor, materials, equipment, tools, and incidentals, for doing all work involved in the spreading, compaction and installation of the aggregate base complete in place and to correct grade, as shown on the plans, specified in these Special Provisions, and as directed by the Engineer.

Measurement and Payment:

Full compensation for Aggregate Base shall be included in the contract price unit price paid for under “Asphalt Concrete, (8” HMAC),” and “Install Sidewalk, w Raised Epoxy Pebble, (4” PCCP),” therefore no separate payment will be made.

Full compensation shall include furnishing labor, materials, equipment, tools, and incidentals, for doing all work involved in the spreading, compaction and installation of the aggregate base complete in place and to correct grade, as shown on the plans, as specified in the Standard Specifications and these Special Provisions, and as directed by the Engineer. No additional payment shall be allowedtherefore

10-11 SURFACINGS AND PAVEMENTS

10-11.01 DESCRIPTION OF WORK

Surfacings and pavements shall include final surface preparation for the paving, providing and installing asphalt concrete and portland cement concrete paving.

10-11.02 ASPHALT CONCRETE

This work shall consist of placing and compaction of Asphalt Concrete between and adjacent to new grade crossing panels within the limits shown on the plans. Asphalt Concrete shall be Type B.

The Asphalt Concrete shall conform to the following requirements:

A. Asphalt Concrete shall be produced from commercial quality asphalt and aggregates.

B. Aggregate for base course shall conform to the 3/4-inch maximum. The first lift shall consist of

base course paving. Base course shall be 3” thick minimum.

C. Aggregate for wearing course shall conform to the 1/2-inch maximum.Wearing course shall be 2” thick minimum. A wearing course paving mix shall be provided when only a single lift is required.

D. Paving asphalt to be used as binder shall be PG 64-10.

E. The amount of asphalt binder to be mixed with the aggregate will be 5.0 to 7.0 percent by weight of the dry aggregate as determined by the Engineer.

Placement and compaction of Asphalt Concrete around the new panels shall be done with special care to avoid damaging or covering the panels or rail. Geotextile fabric shall be installed between the Asphalt Concrete paving and the existing ballast or subgrade. Asphalt used adjacent to the grade crossing panels shall be placed as shown in the Plans.

A paint binder (tack coat) shall be applied to all surfaces such as existing asphalt paving to be joined, curbs and gutters, and construction joints.

The elevation of the completed asphalt pavement surface shall be such that water will not pond on either side of the longitudinal contact joint with the existing parallel asphalt pavement.

Provide asphalt end ramps at the ends of the vehicular track crossing panels on an 8:1 slope (max) as indicated on the plans and details.

Provide asphalt end ramps at the ends of the pedestrian crossing panels as indicated on the plans and details

Aggregate

Recycled materials shall be permitted on this project in accordance with the Standard Specifications.

The aggregate from each separate bin used for asphalt concrete, Type B, except for the bin containing the fine material, shall have a Cleanness Value of 57 minimum for contract compliance and a value of 65 minimum for operating range as determined by California Test 227, modified as follows:

A. Tests will be performed on the material retained on the 2.36-mm (#8)sieve from each bin and will not be a combined or averaged result.

B. Each test specimen will be prepared by hand shaking for 30 seconds, a single loading of the entire sample on a 305-mm (12-inch) diameter, 4.75-mm (#4) sieve, nested on top of a 305-mm (12-inch) diameter, 2.36-mm (#8) sieve.

C. Where a coarse aggregate bin contains material which will pass the maximum size specified and is retained on a 9.5-mm (3/8 inch) sieve, the test specimen mass and volume of wash water specified for 25-mm (1 inch) x 4.75-mm (#4) aggregate size will be used.

D. Samples will be obtained from the weigh box area during or immediately after discharge from each bin of the batching plant or immediately prior to mixing with asphalt in the case of continuous mixers.

E. The Cleanness Value of the test sample from each of the bins will be separately computed and reported.

At drier-drum and continuous plants with cold feed control, Cleanness Value test samples will be obtained from the discharge of each coarse aggregate storage. An aggregate sampling device shall be provided which will provide a 25-kg (55 lb.) sample of each coarse aggregate.

If the results of the Cleanness Value tests do not meet the requirements specified for operating range but

meet the contract compliance requirements, placement of the material may be continued for the remainder of that day. However, another day's work may not be started until tests, or other information, indicate to the satisfaction of the Engineer that the next material to be used in the work will comply with the requirements specified for operating range.

If the results of the Cleanness Value tests do not meet the requirements specified for contract compliance, the material which is represented by these tests shall be removed. However, if requested by the Contractor and approved by the Engineer, material having a Cleanness Value of 48 or greater may remain in place and accepted on the basis of a reduced payment for material left in place.

Asphalt concrete that is accepted on the basis of reduced payment will be paid for at the contract prices for the items of asphalt concrete involved multiplied by the following factors:

Test Value	Pay Factor
56	0.90
55	0.85
54	0.80
53	0.75
52	0.70
51	0.65
50	0.60
49	0.55
48	0.50

If asphalt concrete is accepted on the basis of reduced payment due to a Cleanness Value of 48 to 56 and also accepted on the basis of aggregate grading or Sand Equivalent tests not meeting the contract compliance requirements, the reduced payment for Cleanness Value shall apply and payment by the Contractor to MTS for asphalt concrete not meeting the contract compliance requirements for aggregate grading or Sand Equivalent shall not apply.

Measurement and Payment:

Full compensation for “Asphalt Concrete” shall be included in the contract price unit price paid for under “Asphalt Concrete, (8” HMAC),” therefore no separate payment will be made

Full compensation for “Asphalt Concrete” used for End Ramps, shall be included in the contract unit price paid for under “Construct New Track, Vehicular Crossing,” therefore no separate payment will be made.

Full compensation for furnishing all labor, materials, tools, equipment, and incidentals, and for doing all the work involved in placing the asphalt concrete in lifts, including end ramps, geotextile fabric, Paint Binder, and seal coat, complete in place, as specified in the Standard Specifications and these Special Provisions, and as directed by the Engineer.

10-12 MISCELLANEOUS CONCRETE CONSTRUCTION

10-12.01 CAST-IN-PLACE CONCRETE

10-12.02 MINOR CONCRETE - CONCRETE CURBS, GUTTERS, SIDEWALKS, AND MISCELLANEOUS SURFACE IMPROVEMENTS

Concrete sidewalk, curbs, on-platform and off-platform planter curbs, combined curb and gutter, utility pads, vending machine pads, and curb ramps, shall conform to the provisions in Section 73, “Concrete Curbs and Sidewalks,” of the Standard Specifications, unless required otherwise by the local jurisdiction, and these special provisions. Where conflict exists the local jurisdiction will apply.

A. Curb and Combined Curb and Gutter

Concrete curb and combined curb and gutter shall conform to the applicable San Diego Regional Standard Drawings referenced on the plans. Curb height and gutter width shall match existing adjacent curb and gutter where applicable. Combined curb and gutters shall include extended gutters at pedestrian walkways as shown in the plans.

When curb and curb and gutter are installed in areas of existing AC pavement, pavement shall be sawcut 1 foot from the face of the new curb, or 1 foot from the gutter lip as applicable and as shown on the plans. Pavement replacement shall be in accordance the Type J Pavement Schedule as shown in the City of San Diego Standard Drawings and Section 10-11.12 of these special provisions.

Curb, combined curb and gutters, shall be placed on a minimum of 6” of aggregate base, unless otherwise required by the local jurisdiction. Where conflict exists within the jurisdiction’s right-of-way, the local jurisdiction will apply.

Measurement and Payment:

Full compensation for concrete curbs and combined curb and gutters shall be included in the contract price unit price paid for under “Install Sidewalk, w Raised Epoxy Pebble, (4” PCCP),” therefore no separate payment will be made

B. Sidewalk

Minor concrete construction for sidewalks shall conform to the San Diego Regional Standard Drawings referenced in the plans, and the details shown on the plans, including ramp details at grade crossings.

4” crushed aggregate base shall be provided, placed and compacted in accordance with Section 10-10.03, “Aggregate Base” of these Special Provisions.

Placement of expansion joints shall conform to the San Diego Regional Standard Drawings.

Sidewalk improvements shown on the plans vary in size, geometry. See the site construction plans for the geometric layout of sidewalks and ramps.

Sidewalk shall include an 18” wide epoxy pebble curb as shown in the details.

Measurement and Payment:

Full compensation for concrete sidewalks shall be included in the contract price unit price paid for under “Install Sidewalk, w Raised Epoxy Pebble, (4” PCCP),” therefore no separate payment will be made

10-12.03 EXPANSION JOINT FILLER AND JOINT SEALANTS FOR SIDEWALKS

All finished concrete surfaces shall have a ½" continuous expansion joint at locations indicated on the plans and notes and shall be located either parallel or perpendicular to the curb line. When not otherwise indicated all expansion joints located in or adjacent to sidewalk concrete shall be sealant Type “A” Per section 201-3 of the Regional Standard Specifications and colored to match the color of the concrete surface.

Contractor shall provide joint sealants that have been produced and installed to establish and to maintain

watertight and airtight continuous seals without causing staining or deterioration of jointsubstrates.

Contractor shall submit product data from the manufacturer of each joint sealant product required, including instructions for joint preparation and joint sealer application. Contractor shall also submit samples for initial selection purposes in form of manufacturer's standard bead samples, consisting of strips of actual products showing full range of colors available, for each product exposed to view. Samples shall be submitted to Engineer. Submit complete schedule of type (and location where type is to be used) of each sealant.

Contractor shall engage an experienced Installer who has completed joint sealant applications similar in material, design, and extent of this Project that have resulted in construction with a record of successful in-service performance. Contractor shall submit list of completed projects to the Owner, demonstrating capabilities and experience.

Provide joint sealants, joint fillers, and other related materials that are compatible with one another and with joint substrates under conditions of service and application, as demonstrated by sealant manufacturer based on testing and field experience.

Provide color selections made by Engineer from manufacturer's full range of standard colors for products of type indicated. Color shall match French Gray color concrete. Sealant color parallel to curb line shall match color of adjacent concrete sidewalk.

Measurement and Payment:

Expansion joints and sealants shall be included in the pay items for the individual paving types, and no additional compensation shall be provided therefore.

10-13 NOT USED

10-14 NOT USED

10-15 STORM WATER POLLUTION PREVENTION PROGRAM

10-15.01 DESCRIPTION

Contractor shall conform to local, state and federal water pollution control regulations. Contractor shall utilize Best Management Practices to control storm water pollution as shown in the contract drawings, in conformance with local, state and federal water pollution control regulations.

The Contractor shall perform water pollution control work in conformance with the requirements in the “California Stormwater Quality Association Construction Stormwater Best Management Practices Handbook” and the "Storm Water Pollution Prevention Program (SWPPP) and Water Pollution Control Program (WPCP) Preparation Manual" and addenda in effect on the day the Notice to Contractors is dated. These manuals are referred to as the “Preparation Manual” and can be obtained from:

http://www.casqa.org/

or

http://www.dot.ca.gov/hq/construc/stormwater/manuals.htm

The Contractor must comply with the following Permits:

a. State Water Resources Control Board (SWRCB) Order No. 2009-0009-DWQ, National Pollutant

Discharge Elimination System (NPDES) Permit No. CAS000002, General Permit for Storm Water Discharges Associated with Construction and Land Disturbance Activities (Construction General Permit), as adopted, amended, and/or modified (see http://www.waterboards.ca.gov/water_issues/programs/stormwater/constpermits.shtml); and

b. Regional Water Quality Control Board (RWQCB) Order No. R9-2007-0001, NPDES Permit No. CAS0108758, Waste Discharge Requirements for Discharges of Urban Runoff from the Municipal Separate Storm Sewer Systems (MS4s) Draining the Watersheds of the County of San Diego, the Incorporated Cities of San Diego County, the San Diego Unified Port District, and the San Diego County Regional Airport Authority (Municipal Permit) as amended, and/or modified (see http://www.swrcb.ca.gov/rwqcb9/water_issues/programs/stormwater/sd_stormwater.shtml).

Measurement and Payment:

No separate measurement will be made for the requirements of this section.

Full compensation for complying with the requirements of this section shall be considered as included in the contract prices paid for the various items of work involved, and no additional compensation will be allowed therefore.

TECHNICAL SPECIFICATIONS (CONTINUED)

SECTION 11

11-1 GENERAL

11-1.01 DESCRIPTION OF WORK

The work performed shall include, but not limited to, the following:

A. Track reconstruction, which includes:

1. Removal of existing full-depth grade crossing systems, asphalt concrete, and sidewalk;
2. Removal of existing tracks (rail, ties and ballast), existing vehicular crossings, ballast, and asphalt pavement;
3. Removal and salvage of existing impedance bonds and other track materials as directed by Engineer.
4. Installation of ballasted track including: furnishing and installing filter fabric; ballast, [redacted] owner-furnished new concrete crossties, new track hardware, installing owner furnished new 115 RE rail; [redacted]
5. [redacted] Furnishing and installing new cast-in-place concrete grade crossing assembly;
6. Installing new track hardware; installing owner furnished 115 RE rail on [redacted] concrete crossties; and installing new or salvaged impedance bonds;

B. Rail and Tie Replacement, which includes:

1. Removal and salvage of existing impedance bonds and other track materials as directed by the Engineer.

2. [redacted] installing new and salvaged other track materials as required.

3. 11-1.02 CODES AND STANDARDS

Applicable codes and standards include, but are not limited to:

A. AREMA Manual for Railway Engineering. (Latest Edition in effect at time of bidding)

AREMA Portfolio of Trackwork Plans (Latest Edition in effect at time of bidding)

B. San Diego Standard Drawings, used in conjunction with the latest City adopted editions of the "GREENBOOK" and the "WHITEBOOK".

Federal Railroad Administration (FRA):

Mainline trackwork shall meet or exceed the requirements of Federal Railroad Administration (FRA) Class 4 Track. Siding trackwork shall meet or exceed the requirements of FRA Class 3 Track.

California Public Utilities Commission (CPUC) General Orders:

26-D Clearances on Railroads and Street Railroads with Reference to Side and Overhead Structures, Parallel Tracks, Crossings of Public Roads, Highways and Streets.

143-B Safety Rules and Regulations Governing Light Rail Transit

118 Construction and Maintenance of Walkways & Vegetation Control

ASTM International (ASTM):

ASTM C 29	Test Method for Unit Weight and Voids in Aggregate.
ASTM D 75	Methods for Securing Test Samples.
ASTM C88-99a	Soundness of Aggregates by Use of Sodium Sulfate or Magnesium Sulfate
ASTM C117-95	Materials Finer than No. 200 Sieve in Mineral Aggregates by Washing
ASTM C127	Standard Test Method for Density, Relative Density, and Absorption of Coarse Aggregate
ASTM C131-96	Resistance to Degradation of Small-Size Coarse Aggregate by Abrasion and Impact in the Los Angeles Machine
ASTM C136	Standard Test Method for Sieve Analysis of Fine and Coarse Aggregates
ASTM C142-97	Clay Lumps and Friable Particles in Aggregates
ASTM C 535	Test Method for Resistance to Degradation of Large-Size Coarse Aggregate by Abrasion and Impact in the Los Angeles Abrasion Machine
ASTM D3786	Standard Test Method for Bursting Strength of Textile Fabrics
ASTM D4491-99a	Water Permeability of Geotextiles by Permittivity
ASTM D4533	Standard Test Method for Trapezoid Tearing Strength of Geotextiles
ASTM D4632-91	Grab Breaking Load and Elongation of Geotextiles
ASTM D4716	Standard Test Method for Determining the (In-plane) Flow Rate per Unit Width and Hydraulic Transmissivity of a Geosynthetic using a Constant Head

ASTM D4751	Standard Test Method for Determining Apparent Opening Size of a Geotextile
ASTM D4791	Standard Test Method for Flat Particles, Elongated Particles, or Flat and Elongated Particles in Coarse Aggregate
ASTM D4833-00	Index Puncture Resistance of Geotextiles, Geomembranes and Related Products
ASTM D4886	Standard Test Method for Abrasion Resistance of Geotextiles
ASTM E10-01	Standard Test Method for Brinnel Hardness of Metallic Materials

ASTM E164-97	Standard Practice for Ultrasonic Examination of Welds

ASTM E164-97	Standard Practice for Ultrasonic Examination of Welds

Caltrans Transportation Laboratory – California Test Methods (CTM):

CTM 202	Sieve Analysis of Fine and Coarse Aggregates
SSPC	SP-10 - Near-White Blast Cleaning

CTM 202	Sieve Analysis of Fine and Coarse Aggregates
SSPC	SP-10 - Near-White Blast Cleaning

11-1.03 SUBMITTALS

A. General:

1. Submit manufacturers' catalog data and certification of compliance on filter fabric
2. Submit quarry source(s), gradation(s), and quality certification(s) on ballast
3. Submit manufacturers' catalog data, cut sheets, and certifications as required by these specifications for all contractor furnished materials for approval by the Engineer.

The Contractor shall submit a complete list of required submittals for approval by the Engineer.

B. Trackwork Work Plan:

The Contractor shall submit a comprehensive work plan for all trackwork for the Engineer's approval.

1. Designate the line and profile rails to be used
2. Specify working hours taking into consideration the city of jurisdictions Traffic Engineer's requirements, environmental considerations, and local business and residential access requirements, and scheduled freight movements.
3. Establish procedures for distributing, handling and storing owner furnished rail.
4. Include a detailed cutting plan for owner furnished rail.
5. Include CWR work plan.
6. Do not cut rail strings except as required to fit rail turnouts, crossings or limits of work.

7. Establish a ballast tamping procedure.

8. Establish welding procedures, qualification test result reporting, and a welding crew qualification test result reporting. Welding crew shall be certified by the manufacturer.

9. Establish a method for production welding test result reporting.

10. Establish procedures for unloading, stockpiling, distributing and handling ties.

11. Include a method for reporting temperature records for CWR track anchoring

12. Provide an installation procedure for all trackwork, and removal of existing trackwork.

13. Provide a method for handling all existing and removed ballast

14. Provide a submittal for the manufacture and installation of end plates for use on wood ties.

Any changes in the work plan shall be submitted 10 working days prior to the institution of that change.

11-1.04 QUALITY ASSURANCE/QUALITY CONTROL

A. Manufacturers shall have a minimum of five (5) years' experience in a fixed location of the large-scale manufacture of the material it is to supply. The Contractor shall submit proof of compliance to the MTS Project Manager/Engineer.

B. Manufacturers shall have in place a quality assurance program, adhering to the requirements of ISO 9001, of these special provisions. This may include, but is not limited to first article inspections, source inspections, and on-site surveys. Such compliance shall promote thoroughly tested material that will render long service life to the user. Prime concern must be focused on the necessary formal assurance requirements to insure that material failure cannot be attributed to actions or lack of actions by the manufacturer. A copy of the manufacturer's QA procedures shall be submitted to the Engineer for approval.

C. Manufacturers shall show to the satisfaction of the Engineer that it has, or can obtain, the necessary and proper equipment, tool, facilities and means, and that it has the experience, ability and financial resources to perform the work within the time specified to the quality standards required.

Measurement and Payment

No separate measurement will be made for the requirements of this section.

Full compensation for complying with the requirements of this section shall be considered as included in the contract prices paid for various items of work involved and no additional compensation will be allowed therefore.

11-2 MATERIALS

11-2.01 TRACKWORK MATERIALS, OWNER FURNISHED

The following trackwork materials will be furnished by MTS free of charge and are available to the Contractor in the quantities and at the locations specified herein:

1. [redacted] Roughly 320 TF of 115 RE rail and (130) ea concrete crossties will be furnished by MTS. Rail will be located

in the ROW on the Blue Line South between J Street and L Street and concrete ties will be located at the MTS Wright Street Yard and C Yard. If the contractor needs additional rail besides what has been provided, they are responsible for purchasing and providing the additional rail at the Contractor's expense. MTS intends to have additional rail located at this site, which is not to be used by the Contractor for this project. If the additional rail stored at the site is damaged or otherwise harmed by the actions of the Contractor; the Contractor shall have the cost for remedying the damage deducted from any payments due them by the Engineer.

2. Any track materials salvaged by the Contractor as a part of this contract may be used for trackwork on the contract if the salvaged materials meet the requirements for the subject work and are approved in writing by the Engineer. All track materials salvaged by the Contractor as a part of this contract which are unused shall become the property of the Contractor and Contractor is responsible for removal and disposal.

All MTS-furnished material shall remain the property of MTS. The Contractor shall not remove material in excess of the quantity needed to perform the work specified on the Plans and specifications. Any excess material not used in the work shall be returned to the stock area as directed by the Engineer. The Contractor shall submit a manifest of MTS-furnished materials used to the Engineer for approval.

Measurement and Payment

No separate measurement will be made for the requirements of this section.

Full compensation for loading, transporting and unloading MTS-furnished material shall be considered as included in the contract prices paid for the various items of work involved, therefore no additional compensation will be allowed.

11-2.02.A TRACKWORK MATERIALS, CONTRACTOR FURNISHED

The Contractor shall furnish materials as required to construct trackwork at the locations and to lengths specified herein in accordance with the following:

A. Qualification Of The Manufacturer:

1. Manufacturers shall have a minimum of 5 years' experience in a fixed location of the large-scale manufacture of the material it is to supply. The Contractor shall submit proof of compliance to the Engineer.

2. Manufacturers shall have in place a quality assurance program. This may include, but is not limited to first article inspections, source inspections, and on-site surveys. Such compliance shall promote thoroughly tested material that will render long service life to the user. Prime concern must be focused on the necessary formal assurance requirements to insure that material failure cannot be attributed to actions or lack of actions by the manufacturer. A copy of the manufacturer's QA procedures shall be submitted to the Engineer for approval.

3. Manufacturers shall show to the satisfaction of the Engineer that it has, or can obtain, the necessary and proper equipment, tool, facilities and means, and that it has the experience, ability and financial resources to perform the work within the time specified to the quality standards required.

B. Welding kits: Field Welding Kits for 115 RE rail field welds shall conform to Section 11-4.09, "Rail Welding," of these Special Provisions.

C. Filter Fabric: The filter fabric shall conform to Section 11-2.04, "Filter Fabric," of these Special Provisions.

D. Ballast: Shall conform to Section 11-2.03, "Ballast" of these Special Provisions.

[redacted]. – NOT USED

F. Transition Crossties: Transition timber crossties shall be 7”x9”x9’, 7”x9”x10’, and 7”x9”x11’ and shall conform to Section 11-2.05A, “Timber Crossties,” of these special provisions.

G. Concrete Crossties: Concrete crossties shall be 8’-3” long and shall conform to Section 11-02.05B, “Concrete Crossties,” of these special provisions.

H. [redacted] – NOT USED

I. [redacted]. – NOT USED

J. Bonded Insulated Rail Joints: Insulated joints shall be glued D-Bar Type for various rail sections as manufactured by Allegheny Rail Products, Inc., VAE Nortrak, or approved equal. Contractor shall supply insulated rail joints already pre-assembled in rail plugs. The bonded insulated joints shall conform to Section 11-4.07A – “Bonded Insulated Rail Joints”, of these Special Provisions

K. Track Spikes: Spikes shall be screw-type spikes inaccordance with AREMA specifications, to be used in conjunction with elastic fasteners on timber ties within vehicular grade crossing limits. Spikes shall be 6” long with 15/16 inch diameter.

L. Tie Plates for Timber Ties: Shall be designed per AREMA material standards and specifications. Tie plates shall be designed to be used in conjunction with elastic fasteners and screw spikes.

M. Rail Fastening Assembly for Transition Ties: Rail fastening systems for timber ties shall consist of galvanized Pandrol Type E Clips, or approved equal, with Pandrol mating plates for 5 ½” base rail as shown on the drawings. Galvanized Pandrol Type J Clips, or approved equal, shall be installed at insulated joints. Plates shall be manufactured for 115 RE rail and four screw spikes shall be installed on each plate.

N. Tie Pads for Timber Ties: Rubber/fiber pads shall be designed per AREMA material standards and specifications and be capable of resisting ozone chemicals and weather shall be placed between the tie and the tie plates. Pads shall be 8” x 1/4” x 1” longer than the plate they support.

O. Track Spikes for Timber Ties: Track spikes shall be new 5/8” track spike with reinforced throat and shall to conform with AREMA Volume 1, Chapter 5, Part 2 for “Soft Steel Track Spikes.”

P. [redacted] – NOT USED

Q. Tie Plugs: Tie Plugs shall be hardwood tie plugs and conform to AREMA’s “Specifications for Tie Plugs.”

R. Rail Anchor replacements shall be one-piece Channeloc type or approved equivalent, of standard weight. They may be normally applied with a sledge hammer or manufacturer’s application tool, and of a design, size and construction to properly fit the base of rail on which being applied and shall conform to AREMA Volume 1, Chapter 5, Part 7[redacted]

S. Rail Fastening Assembly for Concrete Ties: Clips, pads, and insulators for concrete crossties shall conform to Section 11-4.06, “Crosstie Placement,” of these Special Provisions.

11-2.03 BALLAST

The Contractor shall furnish new ballast in accordance with these Special Provisions and as shown on the Plans. The work shall include the furnishing of ballast material and transporting new ballast.

A. Materials:

Ballast shall conform to Chapter 1, Part 2, “Ballast,” of the AREMA Manual of Railway Engineering. Ballast shall be crushed quarry rock, composed of hard, dense particles of an angular structure providing sharp corners and cubical fragments. Crushed river rock (gravel), slag ballast or limestone will not be acceptable.

1. Deleterious material in the ballast shall not exceed the following amounts, as determined by the appropriate testing method listed:

Minus 200 Sieve	1.0 percent max. (ASTM C 117)
Clay lumps and Friable Particles	0.5 percent max. (ASTM C 142)
Minus 200 Sieve	1.0 percent max. (ASTM C 117)
Clay lumps and Friable Particles	0.5 percent max. (ASTM C 142)

2. Wear of the material shall not exceed the recommended values by AREMA, when tested in accordance with ASTM C 535 and C 131.

   Loss shall not exceed 5 percent after five cycles when tested in accordance with ASTM C88 for Soundness (Sodium Sulfate).

Gradation Requirements:

Gradation of ballast shall be determined by testing in accordance with ASTM C 136.

Ballast installed and completed in track shall conform to AREMA Size No. 4A, with the following gradation requirements:

Percent by Weight	
Sieve Size, Inches	Passing Percentage
2-1/2	100
2	90-100
1-1/2	60-90
1	10-35
3/4	0-10
3/8	0-3

Handling:

Ballast meeting these requirements for grading shall have not less than 95 percent crushed particles with three (3) or more faces and not more than one-half percent of uncrushed particles.

This gradation is referred to as AREMA No. 4A, nominal 2" – 3/4," for identification only. AREMA No. 5 Ballast gradation shall be used on ballast shoulder intended for the maintenance walkway area as shown on the Drawing.

Ballast shall be kept clean and free of segregation during handling operations.

Inspection:

Ballast is subject to inspection by the Engineer at any time between quarry production and compaction in track. Ballast that does not conform to this Specification shall not be used and Engineer will notify the Contractor to stop further ballast operations until the fault has been corrected and defective material has been disposed of without cost to MTS.

Testing:

Qualification Testing: Ballast at the Quarry shall be qualified prior to production by certified test results submitted for the Engineer's approval not less than five working days prior to beginning of production of ballast. Additional sampling and testing shall be performed if, in Engineer's opinion, there are significant changes in the quarry operation. The Engineer's written approval is required prior to ballast production.

The quality of the source material to be used for ballast shall be determined prior to its acceptance by the Engineer. A test sample of not less than 150 pounds shall be subjected to the following tests by the Contractor's certified testing laboratory or by an on-site certified technician approved by the Engineer:

a. Deleterious substances (ASTM C 142).

b. Los Angeles abrasion (ASTM C 535).

c. The percentage of flat and elongated particles (ASTM D 4791).

d. Sodium sulfate soundness (ASTM C 88).

e. Weight per cubic yard (ASTM C 29).

f. Sieve analysis (ASTM C 136).

g. Bulk specific gravity and percentage of absorption (ASTM C 127).

Quality Control Testing:

The Engineer will sample ballast at the time of deposit on the trackbed to ensure uniformity and conformance with the gradation requirements. Test results will be furnished to the Contractor.

The Engineer may take additional samples at the quarry and from the in-place ballast. The Contractor shall assist the Engineer in taking the samples. The ballast source shall not change without written authorization from the Engineer.

Placement of Ballast:

Subsequent to the excavation of the existing trackway and evidence that the subgrade is satisfactory as prescribed within these Special Provisions, the Contractor shall place filter fabric as described herein. Subsequently, ballast shall be placed as prescribed in Section 11-4.05, "Ballast Placement and Compaction," of these Special Provisions.

All new Asphalt Concrete and Concrete Sidewalk shall be placed on top of new Class 2 Aggregate Base or Track Ballast as shown in the project details.

Measurement and Payment

No separate measurement will be made for Ballast.

Full compensation for furnishing and installing Ballast (as required), shall be considered included in the contract unit price paid for under “Install New Track, Vehicular Crossing,” Asphalt Concrete, (8” HMAC),” “Install Sidewalk w Raised Epoxy Pebble, (4” PCCP),” and “Surfacing, Top Ballast and Destressing,” therefore no additional payment will be made therefore.

11-2.04 FILTER FABRIC

This work shall consist of furnishing and installing filter fabric (geotextile) on the subgrade, beneath the ballast, for the purpose of stabilizing the Roadbed as defined by AREMA. The filter fabric shall be installed as shown on the Plans and in accordance with the manufacturer’s recommendations and these Special Provisions.

Contractor shall place filter fabric on subgrade prior to placement of ballast under any new track section show in the plans and prior to placement of aggregate base course under any new asphalt, or sidewalk section as shown in the plans.

A. Materials:

The filter fabric shall conform to the provisions in Chapter 1, Part 10, “Geosynthetics,” of the AREMA Manual and these Special Provisions. Filter fabric weighing 16 ounces per square yard (Extra Heavy) shall be used and shall be non-woven, manufactured from polyester, polypropylene, or polypropylene- nylon material, with the following properties. The following tests shall be qualification tests made on two samples of filter fabric. The Engineer will choose the samples and the proposed test shall be conducted by an independent laboratory approved by the Engineer. Results of the test shall be submitted to the Engineer for approval. All testing shall be at no additional cost to MTS. Ballast shall not be placed on filter fabric until the Engineer has given written approval to the test results.

Grab Tensile Strength, ASTM D 4632-91	350 lbs. minimum
Elongation, ASTM D 4632-91	20% minimum
Permittivity, ASTM D 4491-99a	0.20 1/sec.
Puncture Strength, ASTM 4833-00	185 lbs. minimum

Handling:

Handling, storage and installation, including overlapping, shall conform to the recommendations of the manufacturer. All sheeting damaged during installation or weakened by exposure to sunlight shall be replaced prior to placement of ballast.

Placement:

Filter Fabric shall be placed in accordance with AREMA Chapter 1, Section 10, Part 1.5, “Construction Details and Methods.” Specifically, Filter Fabric shall be placed with an overlap of 2 feet in both the longitudinal and transverse directions.

Measurement and Payment:

No separate measurement will be made for Filter Fabric.

Full compensation for furnishing and installing Filter Fabric shall be considered included in the contract prices paid for under “Construct New Track, Vehicular Crossing,” Asphalt Concrete, (8” HMAC),” and “Install Sidewalk, w Raised Epoxy Pebble, (4” PCCP),” therefore no separate payment will be allowed.

11-2.05A TIMBER CROSSTIES

1.01 SUMMARY

A. This Section specifies the material requirements and performance criteria for the Timber Railroad Ties to be furnished in accordance with Contract Documents or required by the Engineer.

B. Work included in this Section encompasses work necessary for the manufacturing, production and handling of wood switch ties, crossties, and grade crossing ties.

1.02 REFERENCES

A. AWPA: American Wood Preserver's Association:

1. M2 – Standard for Inspection of Wood Products Treated with Preservatives.

2. M4 – Standard for the Care of Preservative – Treated Wood Products.

3. P2 – Standard for Creosote Solution.

4. P3 – Standard for Creosote – Petroleum Solution.

B. American Railway Engineering and Maintenance of Way Association (AREMA):

1. Manual for Railway Engineering and Portfolio of Trackwork Plans.

C. RTA: Railway Tie Association – Specifications for Timber Crossties and Switch Ties.

1.03 DEFINITIONS

A. Anti-Splitting Device – Any device applied to the end or near the end of a tie or timber such as anti-splitting iron, dowel or nail plate to reduce its splitting.

B. The word "Vendor" used in this Specification shall mean the Contractor.

C. Boulton Drying Process – A process for drying wood by removing moisture from it by heating in preservatives under sufficient intensity of vacuum to evaporate water from the material at the temperature of the preservative used.

D. Creep – The time-dependent deformation of a material under load.

E. Empty Cell – A treatment in which the cell walls in the treated portion of the wood remain coated with preservative, the cell being empty or only partially filled.

F. Hardwood – One group of trees (deciduous) which have broad leaves. The term has no reference to the hardness of the wood.

G. Softwood – One of the group of trees (conifers) which have needle-like or scale- like leaves. The term has no reference to the softness of the wood.

1.04 SUBMITTALS

A. The Vendor shall submit supporting information within 60 days of award documenting the past successful performance in furnishing the materials included in the Schedule of Quantities and Prices. Provide references and contact numbers at the railroads where the wood railroad ties have been placed in service.

B. The Vendor shall submit certificate of compliance that the material delivered is in compliance with

the specification within 60 days of approval of payment.

C. The Vendor shall submit wood railroad ties packaging, loading, shipping, and handling method.

D. The Vendor shall submit for MTS's review and approval quality control and quality assurance plans and related certifications such as ISO 9001, "six sigma" or equivalent demonstrating that the Vendor has the processes, personnel and systems to produce high quality wood railroad ties included in the Schedule of Quantities and Prices.

E. The Vendor shall submit data documenting past performance and projects within the last ten (10) years furnishing wood railroad ties to Class 1 Freight, passenger or commuter railroads.

F. Tests: Certified test results, as required to demonstrate compliance of materials specified herein shall be submitted to MTS before any wood ties are used.

1.05 QUALITY ASSURANCE

A. Vendor's Quality Control Program (QCP) shall be in accordance with the AAR M- 1003 or MTS approved equivalent quality control program.

B. Testing and inspection of tie manufacture shall be performed by Vendor in conformance with AREMA Manual, RTA and AWPA.

C. Ties may be inspected by MTS, at suitable and convenient times and places including points of manufacture, shipment, or destination.

D. MTS reserves the right to examine any equipment used for any process or method of treatment at any stage of tie production.

E. Material not meeting the requirements of this Specification shall not be used in the Work.

F. MTS shall have access to Manufacturer's plant during normal working hours and all Project related procurement and production records for inspection any time during the Contract period of performance.

1.06 DELIVERY, STORAGE AND HANDLING

A. Tie shall be unloaded and stored by contractor.

B. Banding of ties by length or grade for shipment shall be done by applying bands in a tight manner (2,500 pounds of tension) to prevent warping, splitting, and slipping during storage or shipment. Two steel bands per bundle (T = 5,450 pounds, 1¼"x0.029" or better) shall be applied within one foot of each end of cross ties or switch ties. Three bands shall be applied to bundles of switch ties. No more than 9 switch ties shall be bundled together. No more than 25 cross ties shall be bundled together.

C. No steel cables, steel rods, chains, or wooden strips, or any other sticker material shall be shipped in any bundle to MTS.

D. All rejects shall be marked with an "X" on the end. This is to preclude the accidental shipment of less than grade ties to MTS. Treated ties not handled directly from tram to car shall be carefully and neatly stored. Different size classifications shall be kept separate, and all bundles or stacks shall be marked with MTS, grade or length, and treatment date. Ties shall be stacked to ensure that tie straightness is not impaired during temporary storage. Treated stringers shall be placed underneath all stacks of treated ties. No loose windrows of MTS treated ties shall be allowed. Shipments shall be made from the oldest stacks first. If any ties become excessively bleached during storage, they shall be retreated or replaced by the supplier. Yard drainage conditions shall provide rapid drainage of water from beneath stacks of treated ties. Storage areas shall be kept free of grass and weeds to aid free flow of air and to minimize the possibility of fire. The Vendor shall be liable for all fire damage. A minimum 10 foot weed-free zone shall be maintained around

MTS stored inventory at all times. Care shall be exercised in handling of MTS ties for storage or shipment to prevent damage.

E. Ties shall be stored to avoid contamination of water and soil by the ties.

F. Long-term tie storage shall not be located within 250 feet of an open road crossing or residences.

G. Ties temporarily located within 250 feet of a public road crossing or residences shall be covered by an impervious sheet material to control odor and vapor emitted by the crossties by MTS.

PART 2 - PRODUCTS

2.01 GENERAL

A. Wood railroad ties shall be new and conform to MTS Engineering Standards.

B. Wood railroad ties ordered to the Engineering Standards shall be produced in conformance to these specifications and AREMA Specifications.

2.02 WOOD CROSS TIES AND SWITCH TIES

A. The following hardwood species can be used for cross ties, switch ties and grade crossing ties:

1. Oak-Hickory Group: Red Oak, White Oak and Hickories.

2. Mixed Hardwoods Group: Gums, Ashes, Cherry, Walnuts, Birches, Maples, Beech, Locusts, Sycamore, Elms and Cypress

B. The following species are not acceptable:

1. Oak-Hickory Group: Live Oak and Blackjack Oak.

2. Mixed Hardwoods & Softwoods: Douglas Fir, Hem-Fir, Ponderosa Pine, Lodgepole, Pine, Larch, Cottonwood, Willow, Basswood, Hackberry and Poplar.

C. Oak and elm ties shall be of compact wood throughout the top fourth of the tie.

D. All cross ties shall be the full length specified; double end trimmed, and should have full body and full face.

1. Ties with greater than 1” of wane within the 20” and 40” rail-bearing sections, when measured from the center of the tie, are not acceptable.

a. Thickness and width tolerance shall be not more than ¼” thinner or narrower than the specified size.

E. Vendor shall provide a maximum of 50 percent of the ties from oak-hickory species and the remaining 50 percent from mixed hardwoods from list of ties specified under Attachment A, Part E, Section 1 through 4.

1. Oak ties must be air seasoned unless otherwise directed by MTS and preapproved and specified in writing.

2. Mixed Hardwoods must be air seasoned unless otherwise directed by MTS and preapproved and specified in writing.

2.03 GENERALTIE REQUIREMENTS

A. All wooden ties shall be made from sound, straight, live timber and shall be free from any defects that may impair their strength or durability, such as bark, splits, shakes, large or numerous holes or knots, pitch seams, pitch rings, slanting grain or other imperfections.

1. Decay and/or insect damage in any form is not acceptable.

B. All ties shall be well sawn on all four sides and cut square at the end to the full dimensions specified.

1. All ties shall be straight and opposite faces shall be true and parallel, and with all bark entirely removed.

C. All ties shall be straight.

1. A tie shall be considered straight when:

a. Timber Cross Tie: When a straight line from a point on one end to a corresponding point on the other end is no more than 1-1/2" from surface at all points.

b. Timber Switch Ties: When straight line from a point on one end to a corresponding point on the other end is no more than 2" from the surface at all points.

D. A tie is not well sawn when its surfaces are cut with score marks more than ½" deep, or when its surfaces are not even.

E. The top and bottom of a tie shall be considered parallel, if any difference in the thickness at the sides or ends does not exceed ½".

F. For proper seating of nail plates, tie ends must be flat and will be considered square with a sloped end of up to ½", which equals a 1 in 20 cant.

2.04 ANTI-SPLITTING DEVICES

A. Anti-splitting devices are required.

1. Anti-splitting devices (endplates) shall be multi-nail plates as specified in AREMA Manual, Volume1, Chapter30, Part3.1.6, Specifications for Devices to Control the Splitting of Wood Ties.

a. Structural type, Grade "C", 18 gauge galvanized steel, ASTM A653 or better with ultimate strength of 55,000 psi and yield strength of 40,000psi.

b. Galvanizing per ASTM A653, G60 coating.

c. 4-5 teeth per square inch.

d. ½" to 9/16" length of tooth.

2. This application should enable the plate to hold both vertical and horizontal splits.

3. End plates shall be applied by a mechanical device capable of squeezing any splits; bringing the tie back to its original (cross section) dimensions prior to application.

4. End plates for 7"x9" ties are to measure 6" x 7" or 6-1/4" x 7".

5. No part of the end plate is to be within ¼" of any side

6. All anti-split end plates shall have rounded corners and a smooth perimeter.

B. Embossed on all end plates will be "MTS" and manufacturer name followed by the year of manufacture and Treating Plant. End plates will be installed with the letters "MTS" upright with the tie oriented with heartwood down.

2.05 DIMENSIONS

A. All cross ties shall have a 7"x 9" cross-section and shall be double end trimmed, unless otherwise ordered.

B. Length of ties shall be as ordered in each shipping release.

1. Ties will be ordered as 8'-6" or in one (1) foot increments from 9'-0" to 24'- 0".

C. The length, thickness, and width specified are minimum.

1. Ties with thickness and width more than ¼" thinner or narrower than specified will be rejected. Ties over 1" longer shall be rejected.

2. Tie dimensions shall not be averaged.

2.06 PRESERVATIVE

A. The preservative shall consist of a mixture of 50 percent by volume of P-1 creosote oil conforming to AWPA Specifications (AWPA P3 and AWPA P4), and 50 percent by volume of an approved petroleum residuum oil.

1. The creosote and oil shall be thoroughly mixed in the working tank until the mixture is of uniform composition. (Note: use of treatment with P-2, 7lbs / cu ft is an approved equal).

B. The residuum oil shall be approved asphalt base petroleum residuum oil.

1. It shall be free from water and any foreign substance that might interfere with its penetrating qualities.

2. The flash point of the residuum oil shall not be less than 210˚F as determined in the Cleveland Open Cup.

3. The viscosity of the residuum oil shall be such that a blend of 50 percent residuum oil and 50 percent creosote shall have a viscosity exceeding 50 seconds Saybolt Universal 180˚F.

4. BS&W shall not exceed one (1) percent and the creosote oil mixture shall show no sludge formation upon standing. (Note: AWPA P4 is acceptable as an approved equal for residuum oil).

2.07 APPROVALS AND REJECTIONS

A. Ties with any type of decay will be rejected.

B. Rejection of ties for holes and knots. All such holes and knots as defined shall be allowed if they occur outside the sections of the tie between 20” and 40” from its middle.

1. A “large hole” is any hole more than ½” in diameter and 3” in depth within the rail bearing area, or more than 1” in diameter and 3” deep outside the sections of the tie between the 20” and 40” rail bearing area measured from the center of the tie.

2. “Numerous holes” are any number of holes equaling a large hole in damaging effect. Such holes, whether caused in manufacture or otherwise, will because for rejection.

3. A “large knot” within the rail bearing area is one whose average diameter is more than 1/3 the width of the surface on which it appears. “Numerous knots” are any number, which, in total, equal a large knot in damaging effect. A cluster of knots will be judged as if it were a large knot in damaging effect.

C. Ties with shake more than 1/3 the width of the tie, and nearer than 1” to any surface, will be rejected.

1. Fire scar will be considered as bark seam and graded accordingly.

D. Except in woods with interlocking grain, ties with a slant grain in excess of 1 in 15 will be rejected.

E. Ties with continuous checks whose depth in a fully seasoned and/or treated tie is greater than ¼ the tie thickness and longer than ½ the length of tie will be rejected.

F. Any other imperfections that are within the limits of current AREMA and RTA Specifications will be allowed.

G. A split is a separation of the wood extending from one surface to an opposite or adjacent surface.

1. A split 1/8” wide and 4” long in an unseasoned cross tie is acceptable.

2. A split more than ¼” wide and/or 9” long on the face on which it occurs in a seasoned cross tie will be rejected.

3. Do not count the end as a surface.

H. Bark seam or pocket is a patch of bark partially or wholly enclosed in the wood.

1. Bark seams will be allowed outside the rail bearing area provided they are not more than 2” below the surface, ¼” wide, and not more than 5” long.

I. Ties with heart – checks that go into the tie plate area will be rejected if the check is more than a cumulative ½” wide or if the check causes the plate area to be concave or convex.

J. Holes:

1. Ties having solid holes on any surface within the rail bearing areas greater than ½” diameter and greater than 3” deep will be rejected.

2. Ties having solid holes on any surface outside the rail bearing areas greater than 1” in diameter or greater than 3” deep will be rejected.

3. Stump pull will be graded the same as a split in the end of a tie.

4. A stump pull that goes into the interior of the tie more than 5” will be rejected.

5. Numerous holes are defined as having any number equaling a large hole in damaging effect. Such holes may be caused in manufacture or otherwise.

6. Mechanically damaged ties shall be replaced by the party that damages the tie.

PART 3 - EXECUTION

3.01 GENERAL

A. Comply with the MTS Engineering Standards unless specifically noted or excepted within these specifications. Promptly notify MTS of any conflicts, omissions or needed clarifications arising from the use of the designated drawings, standards or specifications.

3.02 PLANT EQUIPMENT

A. Treating plant shall be equipped with the thermometers and gauges necessary to indicate and record accurately the condition of all stages of treatment, and all equipment shall be maintained in acceptable, proper working condition.

B. All green ties should be checked periodically for moisture content prior to going in the cylinder.

1. Twenty (20) borings per charge shall be taken from cross ties, so that the moisture content level can be measured, to determine the amount of water that is to be removed from the crossties.

C. Material shall be conditioned by air seasoning

D. All material, either under vacuum or at atmospheric pressure, should be handled in such a manner that will not cause degrading, checking, splitting, warping or render it unfit for the service intended.

3.03 AIR SEASONING

A. When air seasoning is used, material shall be treated before it begins to deteriorate. Air seasoned material must be given a preliminary heating in the preservative for not more than three (3) hours at a temperature of not more than 210˚F, just before the regular treating operation.

1. All Oak/Hickory ties will be seasoned for approximately 10 months to obtain moisture content not to exceed 45 percent on 2” cores.

2. Mixed Hardwood ties will be seasoned for approximately five months to obtain a moisture content not to exceed 40 percent on 2” cores.

3.04 BOULTONIZING

A. Ties shall only be Boultonized as directed by the MTS Engineer or a designated MTS representative. Cross ties and switch ties scheduled for Boultonizing shall be separated by size and species, incised, and forwarded to the tramming station for handling prior to initiation of the drying process. Hickory ties must be Boultonized with oaks. Each layer of ties on the tram shall be separated with one ¾” steel cable, steel rod, or ¼” Grade 30 steel chain placed on alternate ends as the layers are built. Switch ties will require two cables, rods, or chains per layer for 9’–12’, and three cables, rods, or chains per layer for 13’–16’ + lengths. All steel or wooden stickers must be removed prior to shipment to MTS.

B. When boultonizing, the oils shall cover the material in the cylinder.

1. The temperature of the oil during the conditioning period shall not exceed 210˚F.

2. When a vacuum is then drawn, it shall be of sufficient intensity to evaporate water from the material at the temperature of the oil.

3. The intensity of the vacuum or the temperature of the oil, or both, shall be adjusted so as to regulate the evaporation of the waters.

4. The conditioning shall continue until the materials are sufficiently heated and enough water removed from the cylinder before an empty-cell process is applied for pressure treatment.

5. The Boultonized process used is to conform to AWPA section C1-00 Section 1.3.3, most recent version.

6. Maximum moisture content is to be 50 percent for oak-hickory and 40 percent in mixed Hardwoods before press cycle begins.

3.05 MANNER OF TREATMENT

A. Following the conditioning period, material shall be treated by an empty-cell process to obtain as deep and uniform penetration as possible with the retention of preservative stipulated.

1. The range of pressure, temperature and time duration shall be controlled so as to get the maximum penetration by the quantity of preservative injected.

3.06 EMPTY CELL PROCESS (LOWRY AND RUEPING)

A. Treatment shall be by the empty cell method with a creosote/coal tar solution or creosote/petroleum (50percent-50 percent) solution in accordance with AWPA Standard P-2, P-3, and P-4. The preservative solution shall be tested monthly according to AWPA Standard A-1 with a copy of the results forwarded to the MTS representative. In no case shall treatment be less than that required for AWPA U1, UC4B.

B. Material shall be subjected to atmospheric air pressure or to higher initial air pressure of the necessary intensity and duration.

1. The preservative shall be introduced until the cylinder is filled while the air pressure is being maintained during the filling operation.

C. The Pressure shall be raised on not more than 210lbs/sq inch.

1. Material shall be held under pressure until there is adequate preservative injected to meet specified retention.

D. The temperature of the preservative during the entire pressure period shall not be more than 210˚F but shall average at least 180˚F.

E. After pressure is completed, the cylinder shall be emptied speedily of preservative, and a vacuum of not less than 22” at sea level created promptly and maintained until the wood can be removed from the cylinder free of dripping preservative, or;

1. After pressure is completed, and before removal of preservative from tie cylinder, the preservative surrounding the material may be preheated to a maximum of 215˚F, either at an atmospheric pressure or under vacuum; the steam to be turned off the heating coils and the leader lines opened immediately after the minimum

temperature is reached.

2. The cylinder shall then be emptied speedily of preservative and a vacuum of not less than 22" at sea level created promptly and maintained until the wood can be removed from the cylinder free of dripping preservative.

F. At the completion of treatment, material may be cleaned by final steaming (when authorized) at a temperature not more than 240˚F for not more than 30 minutes.

3.07 RESULTS OF TREATMENT RETENTION

A. No charge shall contain less than 75 percent or more than 110 percent of the quantity of preservative specified for the class of material except when the character of the wood in any charge makes these requirements impracticable despite treatment to refusal.

1. The amount of preservative retained shall be calculated from readings of working tank gages or scales or weights before and after treatment of loaded trams on suitable track scales, with the necessary corrections for changes in moisture content.

B. The column of oil preservatives shall be calculated on the basis of 100˚F.

1. Calculations of volume or weight shall be made by the use of temperature of specific gravity factor contained in the Volume of Specific Gravity Correction Tables of the AWPA.

3.08 PENETRATION

A. Penetration of ties shall not be less than the following for at least 80 percent of the pieces bored in each charge.

Thickness (inches)	Depth (Inches)	Percent of
Sapwood 5 and over	½	90

B. Penetration of ties shall be determined by boring not less than two (2) ties in each tram in each charge or more than 20 ties per charge.

C. Penetration of timber and ties shall be determined by boring approximately midway between ends and midway between top and bottom on 7" side of tie.

1. Only material meeting the penetration requirements shall be accepted.

D. Any charge not conforming to stipulated minimum requirements may be retreated and re-offered for acceptance.

E. Any holes, which may be bored, shall be filled with tight fitting treated plugs.

F. Process and preservative to be used on material and retention required shall be as follows, unless otherwise specified, for all ties.

50 percent Oil Process		50 Percent Creosote Process
Hardwood	7 ½ lbs or Ref.	L&R
Oak	7 ½ lbs or Ref.	L&R or Bethel

G. Retention will be determined by gauge. The amount of preservative solution retained shall be determined from readings of working tank gauges or scales made before and after treatment. The retention of preservative will be calculated after correcting the volume of preservative solution to 100˚F.

3.10 CARE OF TREATED WOOD

A. In handling treated material, extreme care shall be used to avoid damage to the edges of the timbers or breaking through the portions penetrated by the treatment and exposing untreated wood.

B. The use of peaveys, timber dogs, picaroons, log hooks, or other pointed tools shall be such as not to break through the treated portion of treated timber.

3.11 PLANT STORAGE

A. The storage yard for seasoning shall be in the open where the air current will circulate freely; shall not be in a low humid situation if it can be avoided; shall have good drainage; and shall be kept free from vegetation and debris, especially from scrap wood already infected with decay.

B. Treated materials shall be stored in a similar manner to untreated, but must not be piled in same area with untreated materials.

C. Unseasoned material must be stacked separately from seasoned or partly seasoned material.

3.12 STACKING

A. Sawn ties shall be stacked either 1 x 9 or 2 x 9 standard stacking method.

B. Alternate: If necessary to retard evaporation of moisture from the ties, they may be stacked parallel on edge, using cross ties as separators.

3.13 BARKING

A. Remove bark and inner skin before treatment.

Measurement and Payment:

No separate measurement will be made for timber crossties or associated track hardware.

Full compensation for furnishing and installing Timber Crossties, and the associated crosstie plates, spikes, clips, and insulators, shall be considered included in the contract unit price paid under “Crosstie Replacement (Timber Ties),” and no additional payment will be made therefore.

11-2.06B VEHICULAR PRE-CAST CONCRETE GRADE CROSSING PANELS – NOT USED

11-3 TRACK AND BALLAST REMOVAL

11-3.01 REMOVE EXISTING TRACK

The work in this section shall consist of, in general, the removal and disposal, re-installation, or salvage of the existing trackwork materials including rail, turnouts, crossovers, timber crossties, clean ballast, and contaminated ballast.

The work in this section applies to “Remove Existing Track, Vehicular Crossing” and as shown in the plans and specified in these Special Provisions.

The Contractor is directed to Section 10-1.03, “Obstruction and Underground Facilities,” where it is stated that all existing underground facilities within the limits of the Project site are to be protected in-place, unless stated otherwise. The Contractor shall use caution when working near existing switches and be careful not to damage existing switch components. The Contractor shall be replace any damaged facilities.

A. General

Existing facilities to be salvaged shall be immediately loaded onto trucks, transported, and removed to their predetermined salvage location. No stockpiling of said materials shall occur on MTS property without the approval of the Engineer.

Items to be salvaged to MTS that are damaged during removal shall be repaired or replaced as directed by the Engineer at no additional cost to the owner. Salvaged materials shall be protected from theft and damage until such time the materials are delivered and unloaded to the MTS storage facility designated by the Engineer. The Contractor shall provide 5 days minimum notice prior to delivering and unloading materials to the MTS storage facility. The Contractor shall also provide a complete log of materials delivered. The Contractor is responsible to provide the necessary equipment to safely deliver and unload salvaged materials to the MTS storage facility. All trackwork material removed and not shown on the plans or in the special provisions to be salvaged shall become the property of the Contractor and shall be disposed of in accordance with Section 15-2.03, “Disposal,” of the Caltrans Standard Specifications, and with all applicable laws and regulations.

Existing preservative-treated timber crossties that are removed during trackwork demolition and are not to be salvaged shall be disposed of in a safe manner in accordance with the relevant Health and Safety Codes of Practice.
Prior to cutting any existing continuous welded rail (CWR) at any point, install rail anchors beyond the ends of rails to be cut for 200 feet to anchor CWR when the rails are cut. Maintain rail bonding at all times or use jumpers to maintain track circuits. Rail bonding and track circuits are to be located in accordance with Section 10-1.03 “Obstructions and Underground Facilities” of these Special Provisions.

Track circuits shall be arranged such that signals show red when rails are removed. Switch points on crossovers shall be clamped and protected so that out-of-service track cannot be used.

B. Remove Existing Trackwork Material

Existing 115LB rail material, timber crossties, tie plates and spikes, joint bars, anchors, and other improvements shown on the plans to be removed shall be removed and disposed of by the Contractor.

All trackwork material removed and approved to be disposed of by the Engineer shall become the property of the Contractor, unless stated otherwise, and shall be disposed of in accordance with Section 14-10, “Solid Waste Disposal and Recycling,” of the Caltrans Standard Specifications and with all applicable laws and regulations.

C. Remove Existing Ballast

Existing ballast shall be removed within the track limits shown on the track removal sheets. The method of removal shall not disturb the compaction of the underlying materials except where the profile of the track is to be lowered. Existing ballast to be removed shall be tested in situ for contamination and properly disposed of by Section 15-2.03, "Disposal," of the Caltrans Standard Specifications, and with all applicable laws and regulations., and with all applicable laws and regulations. For ballast identified as contaminated by initial, in situ, testing, additional testing of the contaminated ballast shall be performed prior to disposal as required by the disposal facility, with the following minimum testing anticipated:

1. One test per each identified location of contaminated ballast,

2. Four tests per one hundred cubic yards up to 500 cubic yards,

3. One test per 500 yards up to 5,000 cubic yards

4. Additional tests at the frequency required by the disposal facility.

Removal of existing subgrade material below the ballast section shall conform to the requirements of Section 10-4.01, "Earthwork" of these Special Provisions.

Measurement and Payment:

"Remove Existing Track, Vehicular Crossing" shall be measured for payment by the track foot removed.

The contract price paid per track foot for "Remove Existing Track, Vehicular Crossing" shall include full compensation for furnishing all labor, materials, tools, equipment, and incidentals, and for doing all the work involved in demolition and removal of the concrete and/or rubber crossing material, asphalt concrete, existing rail, filter fabric, visqueen, and ballast shown in track removal sheets, crossties, fastening systems, and other track hardware; maintaining rail bonding and track circuits; and loading, transporting and disposing of all removed materials.

Full compensation for installing rail anchors, maintaining rail bonding and track circuits, and clamping and protecting turnouts and crossovers shall be considered as included in the contract prices paid for various items of work involved and no additional compensation will be allowed therefore.

11-4 TRACK CONSTRUCTION

The work in this section shall consist, in general, of preparing subgrade, installing filter fabric, installing timber or concrete crossties, placing ballast, installing 115 RE rails, installing bonded insulated rail plugs conforming to the 115 RE rail section, making rail welds and bolted connections, realigning existing track, lining and surfacing track, and compacting and regulating ballast, all as specified hereafter.

The work in this section shall apply to other work in Section 11 as indicated by reference.

11-4.01 GENERAL REQUIREMENTS

The Contractor shall maintain rail bonding at all times to preserve negative return track circuits. The bonds shall conform to the detail for Typical Joint Bond – 250 MCM, SANDAG Standard Plan DWG S-14, "Signaling, Typical Impedance Bond Layout, and Bonding Details."

The Contractor shall be responsible for disconnecting and reconnecting all track joint bonds and cables within the proposed area of work as needed to install the new improvements. If existing track joint bonds and cables are disturbed, damaged, or destroyed as a result of the Contractor's operations, they shall be

repaired or replaced by the Contractor.

After repair or replacement of track joint bonds and cables is complete, the Contractor shall demonstrate to the Engineer that the repaired or replaced facilities operate properly.

11-4.02 TRACK ALIGNMENT AND GEOMETRY

A. General: Track shall be lined to the alignment and top of rail profile indicated on the Plans or such revised profile grade established by the Engineer, within the tolerances specified.

B. Profile Rail: Top of low (inside) rail on all curves shall be used as grade control. Superelevation shall be obtained only by raising the outer rail in relation to the inner rail. Full superelevation shall be attained within the length of the spiral. Superelevation tags shall be placed on the ties on the gauge side of the high rail. Tags shall be placed with the numbers parallel to the track centerline to read from the track centerline in ¼ inch increments. The tag that indicates full elevation shall be placed perpendicular to the track centerline to read from the low superelevation direction.

C. Line Rail: High (outside) rail on all curves shall be used as line rail.

11-4.03 TOLERANCES

Deviations from indicated gauge, cross level, horizontal line, profile grade, and tie spacing shall conform to the following requirements and A, B, and C shall not vary more than 1/8 inch in 31 feet:

A. Gauge: Track gauge shall be 4' 8-1/2," ± 1/8 inch.

B. Cross Level: Cross level, taken at top of rail, shall be ± 1/8 inch from level on tangent or design superelevation on curve.

C. Deviation from Horizontal Alignment:

1. ± 1/8 inch in 31 feet
2. ± 1/2 inch from the planned alignment
3. + 1/4 inch and minus 0 inches from the planned alignment adjacent to LRT platforms

D. Deviation from Horizontal Circular Curves:

1. Adjacent midordinates of 62-foot chords, with half-chord overlaps, shall not vary more than ± 1/8 inch.
2. Average midordinate shall not vary by more than ± 1/4 inch from theoreticalmidordinate.

E. Deviation from Horizontal Spiral Curves: Midordinate of 62-foot chords, with half-chord overlaps, shall not vary by more than ± 1/8 inch from straight line rate of change.

F. Deviation from Top of Rail Profile Grade: Deviation from top of rail profile grade shall not exceed ± 1/8 inch in 31 feet, and ± 1/2 inch from the vertical alignment shown on the Plans.

G. Crosstie Spacing: Distance between centerline of adjacent crossties shall not vary more than ± one inch from the indicated spacing. Timber ties shall include 22 ties per 39 feet. Concrete ties shall include 20 ties per 40 feet.

11-4.04 TOOLS AND EQUIPMENT

A. On-track equipment shall conform to Chapter 27, Part 2, "Specifications for On-Track Roadway Machines" of the AREMA Manual.

B. Wheel profile shall conform to AAR G-4, 1963, as shown in Chapter 27, Part 2, "Axle Wheel and Hub Specifications for Work Equipment" of the AREMA Manual.

C. Tools used in track construction shall conform to AREMA "Specifications and Plans for Track Tools," or approved equal. All tools shall be calibrated as appropriate for the use.

D. Equipment shall be maintained to the manufacturer's standards and shall be subject to inspection by the Engineer or MTS.

11-4.05 BALLAST PLACEMENT AND COMPACTION

A. Placement of Ballast:

1. After removal of the existing ballast and grading as required, the Contractor shall ensure that the existing subgrade is compacted to 95% relative compaction. The Contractor shall submit a detailed plan for the compaction process to the Engineer for approval. Ballast shall be placed on filter fabric as specified in Section 11-2.03 of these Special Provisions.

2. Ballast spreading and compacting shall conform to Section 25-1.04, "Spreading," and Section 25-1.05, "Compacting," of the Caltrans Standard Specifications. Vibratory squeeze- type tampers and ballast regulator shall be used for ballast compaction. Ballast shall be tamped tightly under and around the crosstie from a point 18 inches inside each rail on both sides of the crosstie to beyond the ends of the crosstie. Ballast around the center of the crosstie between the above limits shall not be tamped.

3. An initial layer of ballast shall be uniformly distributed over the filter fabric and compacted before crosstie distribution, except that ballast shall not be distributed on the roadbed until the subgrade has been accepted by the Engineer. The initial layer of ballast shall be limited to a total compacted depth that will establish the track surface at least four inches below final.

4. Each lift of ballast within the initial layer shall be uniformly spread and compacted with not less than four passes of a vibratory compactor with the following characteristics:

Gross weight: 5000 pounds minimum

Drum width: 58 inches minimum
Drum diameter: 42 inches minimum

5. Each compacted lift within the initial layer shall not exceed a depth of four inches.

   The vibratory compactor shall have a weight of not less than 5,000 pounds and shall be capable of applying a dynamic load of not less than 18,000 pounds at a frequency between 1100 to 2000 vibrations per minute. The compacting equipment selected by the Contractor shall be subject to inspection and acceptance by the Engineer.

B. Tamping Procedure:

A detailed ballast tamping procedure covering tamping equipment and method shall be prepared and submitted to the Engineer before start of ballast placement. The procedure shall include a complete description of equipment to be used and variables that can be adjusted, such as the number of insertions of tamping tools per crosstie and the depth of penetration.

C. Rejected Procedures: If tamping does not produce ballast meeting the criteria stated herein, tamping variables shall be adjusted and the procedures repeated until all criteria is met.

Measurement and Payment:

Ballast supply shall be measured and paid for per Section 11-2.03, “Ballast” of these Special Provisions.

Full compensation for preparation and compaction of subgrade, ballast placement and compaction, including placement, compaction, tamping, and removal of rejected ballast shall be considered as included in the contract price paid for under “Construct New Track, Vehicular Crossing,” therefore no separate payment will be made.

Full compensation for preparation and 2 inches of top ballast placement and compaction, including placement, compaction, tamping, and removal of rejected ballast shall be considered as included in the contract price paid for under “Surfacing Top Ballast, & Destressing,” and therefore no separate payment will be made.

11-4.06 CROSSTIE PLACEMENT

A. General

Attention is directed to Section 11-2.05A, “Timber Crossties,” Section 11-2.01, “Trackwork Materials, and Section 11-2.05B, “Contractor Furnished Concrete Crossties,” of the Special Provisions

B. Installing Timber Crossties

Prior to installation, Contractor shall perform a final visual inspection of the ties to ensure all new timber crossties to be installed are bored, branded, incised, and without defects. If any new ties are damaged or determined to be defective, Contractor shall replace ties at no additional cost.

Contractor shall distribute and place ties in their final locations and shall install ties perpendicular to the track alignment based on the required tie spacing as indicated in the plans and these Special Provisions unless otherwise approved by the Engineer.

Ties shall be placed within plus or minus ½ inch of the required spacing. Any discrepancies in tie spacing shall not be additive.

Ties shall be placed with the heart wood down and ensure the bottom of each tie is fully supported on the initial ballast layer.

Timber crossties shall be Douglas fir. Timber ties may be reused at the discretion of the Engineer. All ties to be reused shall be plugged.

C. Tie Plates (Timber Crossties)

Tie plates shall be positioned so the batter of the plate will cant the rail to the gauge side and shall

be centered on the tie and so applied as to obtain proper bearing of rail. Care should be taken so the outside (field side) shoulders of all tie plates have full bearing against base of rail. Tie plates shall be used as shown on the plans and approved shop drawings.

Tie plates for “Construct New Track on Timber Tie” locations shall be attached to the crossties with screw spikes installed as indicated. Spikes shall be so placed that there will not be less than 2 inches from the center of spike to the edge of the crosstie. Installation of screw spikes and specified resilient fasteners shall be in accordance with manufacturer’s recommendations.

Tie plates for “Crosstie Replacement (Timber Ties)” shall be attached to the crossties with cut spikes installed as indicated in the plans. Spikes shall be so placed that there will not be less than 2 inches from the center of spike to the edge of the crosstie.

D. Placement of Rail and Fastenings on Concrete Crossties

1. Crosstie Pads: Rail seats shall be clean and crossties properly positioned prior to placement of pads. Pads shall be accurately positioned and centered on the rail seat. Pads shall be compatible with the rail fastening system with a shape which provides positive means of preventing movement of the pad parallel to the rail. Use elastomer pads with a minimum thickness of 6.5mm or maximum thickness of 10.5 mm. The Rail seat padsshall meet the following specifications:

    - Hardness: 70-95 durometers, ASTM D2240
    - Tensile strength: 10.3 MPA, ASTM D412
    - Ultimate Elongation: 250 percent, minimum, ASTM D412
    - High Temperature Compression Set: not to exceed 40 percent, ASTM D395
    - Volume resistivity: 1x1012 ohms-cm.

2. Rail: Rail shall not be dropped into place. Use rollers to facilitate unloading and reduce the risk of dislocating crossties and crosstie pads. Rail shall not be brought into contact with the crosstie ends during installation. Care shall be taken to prevent damage to pads and insulators by rail heaters.

3. Fastenings: Fastenings, to include clips and insulators, shall be as shown on contract drawings. The rail clips shall be galvanized Pandrol Type “e” 2055 or approved equal. The insulators shall be glass reinforced nylon Pandrol Type INS-4263 or approved equal.

Measurement and Payment

No separate measurement will be made for installing crossties and associated track hardware.

Full compensation for furnishing and installing timber crossties at vehicular crossings, and furnishing and installing the associated crosstie plates, screw spikes, clips, pads, and insulators (as required), shall be considered as included in the contract price paid per track foot for as included in “Construct New Track, Vehicular Crossing,” and no additional payment will be made therefore.

11- 4.07A BONDED INSULATED RAIL JOINTS – NOT USED

11-4.08 RAIL LAYING

115 RE Continuously Welded Rail (CWR) shall be loaded, handled, transported, unloaded, and installed in accordance with the requirements of "Handling and Transporting of Continuous Welded Rail" in Chapter 5, Part 5.2.3 of AREMA Manual of Railway Engineering, except as modified herein.

The Contractor is cautioned that rail lengths vary. Careful investigation and verification of field conditions and locations of existing rail joints where CWR is to be connected are to be noted to determine the actual lengths of rail strings required. Field welds within the limits of rail shown are not permissible unless approved in writing by the Engineer. In no case shall new rail be furnished in lengths of less than 80 feet unless approved by the Engineer.

A. Temperature Adjustment: Track shall be fully spiked (fastened), ballasted sufficiently to prevent tie movement, and lined and surfaced prior to final rail adjustment and anchoring. CWR shall be anchored after rail is adjusted to zero thermal stress at a rail temperature of 105 degrees, +10 degrees, -5 degrees F. The Contractor may heat, cool, or stretch the rail to meet this requirement.

1. Rail Temperature. Rail temperature shall be determined during rail anchoring by means of a standard AREMA rail thermometer. The Contractor shall furnish sufficient rail thermometers for the Engineer's use during field welding and de-stressing operations. Thermometers will be returned to the Contractor after completion of the work. Temperature of rail shall be determined by placing the rail thermometer on the shaded side of the rail base next to the web, and leave until no change in its reading is detected. In no case shall the thermometer be removed in less than five minutes.

2. Temperature Records. Information to be recorded shall be:

   a. Date and time for each string installed.

   b. Location by station, left or right rail, and string length.

   c. Rail temperature, air temperature, and weather conditions.

   d. Rail gap to nearest 1/16 inch.

B. Rail Cuts and End Preparation: Rails shall be cold-sawn, square across the rail, with maximum 1/32 inch deviation from square. All burrs shall be removed and ends made smooth. Bevelling of rail ends is required at all bolted joints, conforming to Plan No. 1005 in the AREMA Portfolio of Trackwork Plans.

After cutting and bevelling, rail ends in standard rail shall be end hardened by a hardening process proposed by the Contractor, which will provide a uniform hardness pattern across the top surface of the rail head for 2 inches from the end. The Brinell hardness number, when tested in conformance with ASTM E10, shall be between 370 and 401, starting 1/4 inch from the end, and shall decrease uniformly to the hardness of the untreated rail 2 inches from the end.

The Contractor shall submit a test of the hardening process, out of track, with Brinell hardness tested by an independent testing laboratory engaged by the Contractor and approved by the Engineer. Tests shall be made on the rail centerline and 3/4 inch on each side of the centerline, starting at 1/4 inch from the end and at three other cross sections, 1 inch, 2 inches, 3 inches, and 4 inches from the end. If the tests do not indicate acceptable results, the procedure shall be modified and re-tests made until acceptable test results are achieved.

After final alignment of each section of track to the specified tolerances, but prior to final acceptance,

the Contractor shall grind top and gauge side of running rails using a high-speed rail mounted fine granite grinder, such as Loram “L” series or approved equal, set to grind a minimum of 0.025 mm and a maximum of 0.051 mm with each pass. The Contractor shall grind running rails, switch rails and frogs to original manufacturer’s profile insuring to remove all mill scale and pits. The equipment and method of operation used by the Contractor shall be approved by the Engineer prior to initiation of rail grinding. At the direction of the Engineer, grinding may be delayed until all of the rail at all locations has been laid.

Measurement and Payment:

No separate measurement will be made for the requirements of this section.

Full compensation for preparing and laying new rail and rail grinding shall be considered as included in the contract prices paid for “Construct new Track, Vehicular Crossing,” and therefore no separate payment will be allowed.

11-4.09 RAIL WELDING

All field welds shall use exothermic methods conforming to the requirements of Chapter 4, Part 2.5, “Thermite Welding – Rail Joints” of the AREMA Manual, except as modified herein.

All factory (shop) welding shall be in accordance with Chapter 4, Part 2.2 “Specifications for Fabrication of Continuous Welded Rail,” of the AREMA Manual, and these Special Provisions.

All welding shall be performed under the direct supervision of a welding foreman or supervisor with a minimum of five years documented experience supervising field welding. In addition, a manufacturer's representative experienced in thermite field welding shall be present at the job site on an as-needed basis and shall witness the making of thermite welds for acceptance.

Prior to production welding, each crew, including foreman or supervisor of that crew, shall prepare a qualification weld in 115RE rail, out of track, at the expense of the Contractor. The weld shall be prepared in accordance with the approved procedure Specification and will be witnessed by the Engineer.

Contractor is to supply and use 500 mcm jumper cables for all welds. The jumper cables shall be removed within 7 days of placement. Jumper cables shall be clamped to the rail in lieu of welding.

Testing: Testing agency shall visually inspect the crew qualification welds and perform ultrasonic testing and Brinell hardness testing on each.

Test Record: The test record shall contain the names of the crew members, including foreman or supervisor of that crew, who performed the qualification weld and briefly describe their specific duties. The test records shall also show results of visual inspection, ultrasonic testing and rail hardness test. All performance qualification records shall be submitted to the Engineer at least 14 calendar days prior to production welding. Production welding shall not commence until qualification test welding records have received written approval by the Engineer.

Requalification: The Engineer reserves the right to require the re-qualifications, at the Contractor's expense, of any crew of welders whose work fails to meet the specified requirements.

C. Weather: Field welding shall not be done during inclement weather. Inclement weather shall include, but not be limited to, rain and fog.

D. Location: Field welds shall be in accordance with the following restrictions:

1. Compromise welds in opposite rails shall be staggered at least 10 feet except where closer spacing is required by field conditions and is approved by the Engineer.

2. Field welds shall not be located within 19 feet of a bolted rail joint.

3. Field welds shall not be positioned within 3 inches from the edge of a tie plate or concrete tie. All joints, whether bolted or welded, shall be suspended between ties.

4. Field welds shall not be located within 8 feet of an existing field, shop, or factory weld.

5. Field welds shall not be located within the limits of a vehicular or pedestrian crossing.

E. Alignment: The ends of the rails to be welded shall be properly gapped and aligned to produce a weld that will conform to the following alignment tolerances. Cutting back and/or straightening of bent rail ends will be considered incidental to this work. The rail gap alignment shall be held by a hydraulic rail puller/expander and alignment jig without change during the complete field welding cycle. If the rail gap is larger than manufacturer's recommended gap after the rails have been adjusted for zero thermal stress, then sufficient rail shall be removed from one or both rails to permit insertion of a rail not less than 19 feet long, which shall provide the recommended gaps at each end of the field welding. At a location where the rail gap is smaller than the manufacturers recommended gap, the recommended gap shall be obtained by sawing a piece from onerail.

1. Alignment of rail shall be done on the head of the rail:

   a. Vertical alignment shall provide for a flat running surface. Any difference of height of the rails shall be in the base.

   b. Horizontal alignment shall be done in such a manner that any differences inthe width of heads of rail shall occur on the field side.

2. Horizontal offsets at joints shall not exceed 0.040 inch in the head and 0.125 inch inthe base.

3. Surface Misalignment Tolerance:

   a. Combined Vertical Offset and Crown Camber shall not exceed 0.040 inch per foot at ambient temperature.

   b. No Dip Camber shall be allowed.

4. Gauge Misalignment Tolerance: Combined Horizontal Offset and Horizontal Kink shall not exceed 0.040 inch per foot at ambient temperature.

F. De-Stressing and Final Anchoring of Field Welded Rail:

1. After each track has been surfaced and lined, and the ballast has been compacted and dressed, the rail fasteners shall be loosened and the rails adjusted to an effective zero thermal stress at a designated rail temperature of 105 degrees F (plus10 degrees/minus 5 degrees F). De-Stressing limits shall extend 200 feet into existing track on each side of the new trackwork limits or to a restriction that prevents rail movement, whichever is greater.

2. The Contractor may heat, cool, and stretch the rails to meet this requirement using rail heaters, cooling water, and hydraulic rail expanders. If rail stretching is to be utilized, it shall be used in conjunction with heaters and during the anticipated warmest period of the day.

3. Rails shall be fully anchored to the ties and all open joints welded while the rails are maintained in the required temperature-stretched condition specified above. Prior to anchoring and welding, rails will be vibrated. Final closure shall be by a field weld withthe rail fully fastened (expect immediately adjacent to the field weld as necessary to perform the weld) near or at final elevation and alignment. If post closure rail realignment is required, the Contractor shall provide sufficient longitudinal restraint either side of the location of realignment to assure the rail stress state is not changed by the realignment Work.

4. Rail temperature shall be determined during rail anchoring by means of a standard AREMA rail thermometer. The Contractor shall furnish the Engineer with two rail thermometers at the Contractor's expense. Temperature of rail shall be determined by placing the rail thermometer on the shaded side of the rail base next to the web, and leaving it until no change in its reading is detected. In no case shall the thermometer be removed in less than 5 minutes.

5. Temperature Records: The following information shall be recorded by the Contractor:

   - Date and time for each string installed.
   - Location by station, left or right rail, and string length.
   - Rail temperature, air temperature, and weather conditions.
   - Rail gap to the nearest 1/16 inch.

G. Finishing: Projections, fins, and other surface irregularities that would interfere with testing shall be removed from all welds.

The weld shall be finished with a rail mounted rail head grinder specifically designed for the work. Finishing shall conform to the following tolerances:

1. Top of rail head, plus 0.010" to minus 0" of the parent rail section.
2. Sides of rail head, plus or minus 0.010" of parent rail section.
3. The balance of the rail section shall be finished with a hand-held grinder as required to remove notches, gouges, and other defects. All grinding shall blend to the parent rail section and shall not overheat the steel. Heavy grinding shall be completed while steel is still hot from welding.

H. Procedure: A detailed procedure shall be prepared and submitted which covers a step-by-step process to be employed in making field thermite welds. A complete description of each of the following items and any other essential characteristics shall be included in the procedure:

1. Method used for cutting and cleaning of rail ends.
2. Minimum and maximum gap between rail ends.
3. Method and equipment used for maintaining rail gap and alignment during welding.
4. Method used for preheating including time and temperature.

5. Tapping procedure including minimum time required to cool weld under the mold insulation.

6. Method used, including a description of special tools and equipment, for removinggates and riser and finishing weld to final contour.

7. Manufacturer's trade name for welding process.

I. Weld Numbering: Each weld shall be given a number in sequence as the welding progresses. The number shall be painted with aluminum paint two inches from the finished weld on the field side of the rail. Defective welds that are replaced shall be given a new sequential number. This number shall be recorded in the field welding records.

J. Field Weld Testing Procedures: All rail welds shall be tested by the Contractor through the use of an independent testing agency using the Ultrasonic test method in accordance with ASTM E164.

Each completed weld shall have full penetration and complete fusion and be entirely free of cracks. Total area of internal defects such as porosity and slag inclusions shall not exceed 0.060 inch and the largest single porosity or slag defect permitted shall not exceed 1/8 inch in diameter.

Other causes for rejection of welds shall be:

1. Cracks that show in the finished weld.

2. Pit holes that show in web and base of weld after finish grinding weld. Minor defects may be repaired by qualified welders in accordance with repair procedures approved by the Engineer.

Welded joints not meeting these specifications and tolerances will be replaced at no additional cost to the Engineer. The defective weld shall be cut out, and a new section of rail not less than 19’-6” feet long shall be inserted, welded into place as described in this section, and retested.

Measurement and Payment

No separate measurement will be made for the requirements of this section.

Full compensation for rail welding and de-stressing within the trackwork limits shall be considered as included in the contract prices paid for under “Surfacing, Top Ballast and Destressing,” and “Construct New Track, Vehicular Crossing,” therefore no separate payment will be allowed.

11-4.10 LINING ANDSURFACING

Track shall be surfaced, tamped, and lined to the tolerances indicated in Section 11-4.03 herein, as shown in the plans, and as directed below:

The track shall be lifted by methods and equipment subject to approval of the Engineer. Equipment used for this operation will be the Canron Mark II or equal. Undue bending of rail or strain on joints or damage to crossties or equipment during lining and tamping shall be prevented. Both rails shall be raised at one time

and as uniformly as possible. Track shall be lifted so that it will be necessary to give it a final lift of not less than 1 inch and no more than 2 inches to bring it to grade. Track shall be raised with a minimum of two major passes including one final surfacing pass. The final surfacing pass of the track shall be lifted by means of equipment equipped with a laser-type horizontal grade and vertical alignment control that can be set to control points.

Measurement and Payment

No separate measurement will be made for the requirements of this section.

Full compensation for lining and surfacing track at various phases of track construction or reconstruction, to permit rail traffic to operate throughout the trackwork, shall be considered as included in the contract prices paid for under “Surfacing, Top Ballast and Destressing,” and “Construct New Track, Vehicular Crossing,” therefore no separate payment will be allowed.

11-4.12 CONNECT TO EXISTING TRACK

The Contractor shall cut into the existing rails a sufficient distance so that proper welded joints can be made. Maintain proper stagger in jointed track and construct track on the existing timber ties with the 115RE tie plates.

Measurement and Payment:

No separate measurement will be made for the requirements of this section.

Full compensation for complying with the requirements of this section shall be considered as included in the contract prices paid for the various items of work involved, and no additional compensation will be allowed therefore.

11-4.13 BALLAST DRESSING

The ballast section shall be dressed to the cross section indicated after completion of the final lining and surfacing operation. Ballast that does not conform to the indicated cross section at the time of final inspection shall be redressed at the Contractor's expense. The top of the ballast shall be one inch below the bottom of the rail unless indicated otherwise.

Measurement and Payment:

No separate measurement will be made for the requirements of this section.

Full compensation for dressing the ballast section shall be considered as included in the contract prices paid for under “Surfacing, Top Ballast and Destressing,” and “Construct New Track, Vehicular Crossing,” therefore no separate payment will be allowed.

11-4.14 INSPECTION

Final inspection by the Engineer may include operation of a track geometry car at MTS expense to measure gauge, cross level and deviation from specified alignment and grade. The contractor shall provide access and accommodate the required inspections within the approved work windows. Track deviations, as disclosed by this inspection, which exceed specified tolerances, shall be corrected at no additional cost to MTS.

11-4.15 MEASUREMENT AND PAYMENT

The contract unit price paid per track foot for “Construct New Track, Vehicular Crossing” shall include full compensation for furnishing all labor, materials, tools, equipment, and incidentals, and for doing all the work involved in constructing new Ballasted track, complete in place, including preparing subgrade, installing subballast as required, installing filter fabric, placing and compacting ballast, placing and aligning new timber crossties for vehicular crossing panels, placing asphalt concrete ramps, furnishing and placing vehicular concrete crossing panels as required per plans, furnishing, placing and aligning new 10’ timber crossties (including transition area ties outside vehicular crossing), including all other track

material; installing rail, rail welding; de-stressing the rail, lining and surfacing to all specified tolerance requirements; tamping, dressing and regulating newly placed ballast complete in place, all as shown on the Plans, as specified in the Standard Specifications and these Special Provisions, and as directed by the Engineer.

11-6 NOT USED

11-7 TIMBER CROSSTIE REPLACEMENT

11-7.01 GENERAL

The work in this section includes timber crosstie replacement and refers to localized replacement of one or more crossties in a specific area. Prior to commencement of the crosstie replacement and crosstie transition replacement work, the Engineer will perform a field walk to identify the crossties to be replaced. For crosstie transition tie replacement, the work described in this section shall be according to details in the plans. The work in this section excludes tie replacement in the limits of at-grade vehicular or pedestrian crossings or within full track replacement limits. Other provisions specified in Section 11-1 of these Special Provisions also apply. The Contractor shall submit detailed plans for approval before commencing this work. This work consists of removing rail anchors, track spikes, and tie plates from the tie to be replaced; replacing the tie; reinstalling the materials; and surfacing, tamping, and lining the track. In order to maintain track integrity, contractor will be allowed to remove every third tie at a time for all work associated with “Crosstie Replacement (Timber Ties).”

Materials:

Ballast: See Section 11-2.03 of these Special Provisions

Ties: See Section 11-2.05a of these Special Provisions

Contractor furnished Rail Anchors, See Section 11-2.02

Contractor furnished Track Spikes, See Section 11-2.02.

Contractor furnished Tie Plates, See Section 11-2.02

The Contractor shall furnish, as necessary, new rail fastening components (Spikes, tie plates, rail anchors) compatible to the existing track size and as specified in the Contract Documents. The Contractor shall also furnish new track markings, such as superelevation tags, to replace existing track markings on replaced ties.

Construction:

Perform work on this Section in accordance with applicable specification section 11-4 and provisions of the AREMA Manual

Prior to commencement of the crosstie replacement work, inspect and verify areas indicated on Contract Drawings, marked in the field, or as required by the Engineer for crosstie replacement

Replace defective ties as marked in the quantities identified in the Contract Documents or marked in the field and within the Contract limits.

In order to maintain track integrity, contractor will be allowed to remove every third tie at a time.

Perform work in such manner to best utilize time allowed under the available working time limits.

Perform work in accordance with applicable parts of Section 11-4 Track Construction, except as modified or amended herein.

Excavate the tie cribs and ends so that the old ties can be removed and new ties installed without jacking the rails, or otherwise distorting or “humping” the track.

Remove existing crossties without excessively splintering them. Dispose of these crossties including associated debris.

Contractor shall replace all removed spikes with contractor furnished spikes.

Remove and salvage existing cut spike plates and rail anchors.

Reuse existing tie plates with the following exception: Worn, bent or cracked plates and plates less than 14-inch long shall be replaced with new contractor supplied tie plates (see 11-2.02 for quantity assumptions). Position plates so that the batter of plate will cant rail to gauge side and be centered over the width of the tie to obtain proper bearing of rail. Ensure that outside (field side) shoulders of tie plates have full bearing against base of rail. Set spikes with a self- propelled driver/setter machine.

Center tie plates over the width of the tie, except that the plate shall be positioned up to 1/2 inch off-center if necessary to avoid spiking into an existing tie split.

Use the standard spiking pattern shown in the plans. Keep respiking of new timber ties to a minimum. Replace ties that have been excessively respiked, as determined by the Engineer, or ties that have been respiked due to the Contractor’s carelessness.

Reuse existing anchors in good condition. If existing rail anchors are damaged, replace with contractor supplied rail anchors. (see 11-2.02 for quantity assumptions).Install anchors tight against the tie.

Repair any track that is distorted or humped, as a result of the Contractor’s operation.

Install rail anchors as shown in the plans.

Spot tie replacement includes powered hand machine tamping and dressing of track.

For spot tie replacement work, submit a summary report of work performed, numbers and locations of the ties replaced, and level of ballast renewal for a station work group.

After completion of spot tie replacement, perform inspection on post work track condition. The crosstie replacement work will not be accepted as complete until the Engineer has checked and verified the final track condition.

Track shall be surfaced, tamped, and lined to the tolerances indicated in Section 11-4.03 herein, as shown in the plans, and as directed below:

Measurement and Payment

“Crosstie Replacement (Timber Ties)” shall be measured by each crosstie satisfactorily replaced.

The contract unit price paid for each “Crosstie Replacement (Timber Ties)” shall include full compensation for furnishing all labor, materials, tools, equipment, and incidentals, and for doing all the work involved in replacing each crosstie, distributed and installed as specified, complete in place, including any required demolition and replacement of surface improvements, as shown on the Plans, as specified in these Special Provisions.

“Surfacing, Top Ballast, & Destressing” measured and paid for by the track foot, measured on a horizontal line along the centerline of track between the limits of the work shown on the Plans, or to the limits as directed by the Engineer if different from that shown on the Plans. The contract unit price paid per track foot for “Surfacing, Top Ballast, & Destressing” shall include full compensation for furnishing all labor, materials, tools, equipment, and incidentals, and for doing all the work involved in purchasing and placing top ballast, rail welding; de-stressing the rail, lining and surfacing to all specified tolerance requirements; tamping, dressing and regulating newly placed ballast complete in place, all as shown on the Plans, as specified in the Standard Specifications and these Special Provisions, and as directed by the Engineer.

11-8 WORK WINDOWS

11-8.01 GENERAL

All Contractor employees or representatives shall be trained through the MTS Railroad Worker Safety Training Program prior to the work.

Flaggers: The Contractor shall request flaggers from MTS/SD trolley, a minimal of three business days in advance of any work activity within the MTS right-of-way. The Engineer shall furnish the necessary forms to request flaggers.

Rail Trains/Carts can be loaded during revenue hours if the rail train does not occupy the mainline tracks during the operation*

Special Events: Contractor to schedule the work around special events such as Rock N Roll, Marathon Padres, SDSU Sporting events, Comic-con etc. and to coordinate with City and MTS projects.

Should the Contractor need to work during weekend hours, a minimal of three business days in advance notice shall be given to MTS and the Engineer.

11-8.02 STANDARD WORK WINDOWS

Weekday work is to be performed between trains from 9:00 PM to 1:30 AM. Weekday non-revenue service will be from 1:30 AM to 4:00 AM - (Tuesday through Saturday).

Saturday work is to be performed between trains from 9:00 PM to 1:30 AM. Saturday non-revenue service will be from 1:30 AM to 4:30 AM – (Sunday).

Sunday work is to be performed between trains from 9:00 PM to 12:00 AM. Sunday non-revenue service will be from 12:00 AM to 4:00 AM – (Monday).

San Diego Imperial Valley Railroad will have approximately three (3) freight train deliveries per month. Contractor is to coordinate around deliveries.

11-8.03 WEEKEND SHUTDOWNS

[redacted]

[redacted]

All work shall be complete as soon as possible within 90 calendar days from issuance of NTP. The work shall proceed using one (1) weekend for installation of the grade crossing. Staging of materials and partial demolition work may take place during revenue hours with prior approval and during non-revenue service. The contractor to provide ingress & egress, including accessible wheelchair access and directional signage to include universal symbol for wheelchair access, for the passengers at all time during construction.

The work to take place during one (1) weekend shutdown, the hours will be from 1:30 AM on Saturday to 4:00 AM on Monday.

Weekday work to be performed between trains from 9:30 PM to 1:30 AM.

Weekday non-revenue service is from 1:30 AM to 4:00 AM.

Special Events: Contractor to schedule the work around special events such as Rock N Roll Marathon, Padres, etc. and to coordinate with City and MTS projects.

TECHNICAL SPECIFICATIONS (CONTINUED) SECTION 12

12-1 Extra Work

New and unforeseen work will be classed as extra work when determined by the Engineer that the work is not covered by any of the various items for which there is a Bid price or by combinations of those items. In the even portions of this work are determined by the Engineer to be covered by some of the various items for which there is Bid price or combinations of those items, the remaining portion of the work will be classed as extra work. Extra work also includes work specifically designated as extra work in the plans or specifications.

This extra work will be initiated with a Request for Proposal (RFP) issued by the Engineer. The Contractor shall respond within five working days with a detailed cost proposal with all labor, material and equipment costs shown in a force account format. Failure of the Contractor to submit a complete cost proposal within the allotted time will constitute a waiver by the Contractor of any and all rights for additional cost and/or time associated with the change order. If the Contractor determines that a time extension is warranted, the Contractor shall submit a Time Impact Analysis with hourly not to exceed labor costs as originally submitted at the time of Contractors bid.The Contractor shall do the extra work and furnish labor, material and equipment therefore upon receipt of an approved contract change order or other written order of the Engineer, and in the absence of an approved contract change order or other written order of the Engineer, the Contractor shall not be entitled to payment for the extra work.

12-2 Mobilization

Mobilization shall conform to the provisions in Section 12, “Mobilization,” of the Standard Specifications and these Special Provisions. Staging and stockpiling of equipment and materials shall be

within the limits of work as shown on the plans, unless said otherwise.

Measurement and Payment:

No separate measurement will be made for the requirements of this section.

Full compensation for complying with the requirements of this section shall be considered as included in the contract prices paid for the various items of work involved, and no additional compensation will be allowed therefore.

Schley X-ing Demo

EXIST TRACK ≈320 TF
EXIST CONC ≈1300 SF
EXIST ASPHALT ≈800 SF
EXIST PANEL ≈2000 SF
EXIST SIDEWALK + C&G ≈240 SF

CONTRACTOR TO FIELD VERIFY ALL VALUES AND INFORM MTS OF DISCREPANCIES.

Legend
Schley Crossing

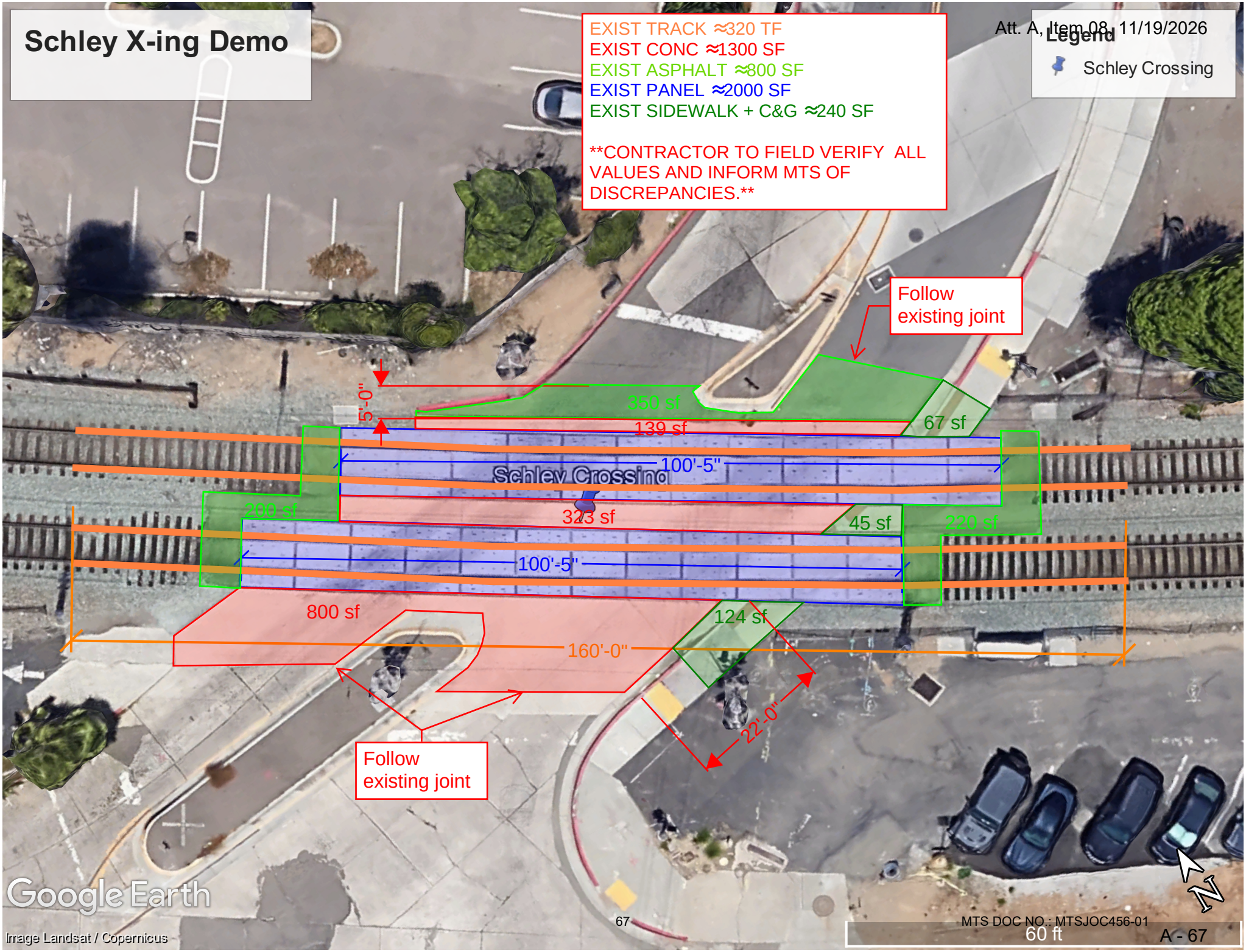

Schley X-ing Const

CONSTRUCT NEW TRACK, VEHICULAR GRADE CROSSING ≈320 TF
CONC TIES & RAIL SUPPLIED BY MTS. CONTRACTOR TO PROVIDE WOOD TRANSITION TIES, RUBBER RAIL INTERFACE, & ALL OTM

CONSTRUCT NEW CIP CONC GRADE X-ING ≈3000 SF

REPLACE ASPHALT IN KIND ≈970 SF

CONSTRUCT NEW SIDEWALK W/ RAISED EPOXY PEBBLE (4" PCCP) + C&G WHERE APPLICABLE≈400 SF

REPLACE SIDEWALK STRIPING PER CITY STANDARD = 60 LF

CONTRACTOR TO FIELD VERIFY ALL VALUES AND INFORM MTS OF DISCREPANCIES.

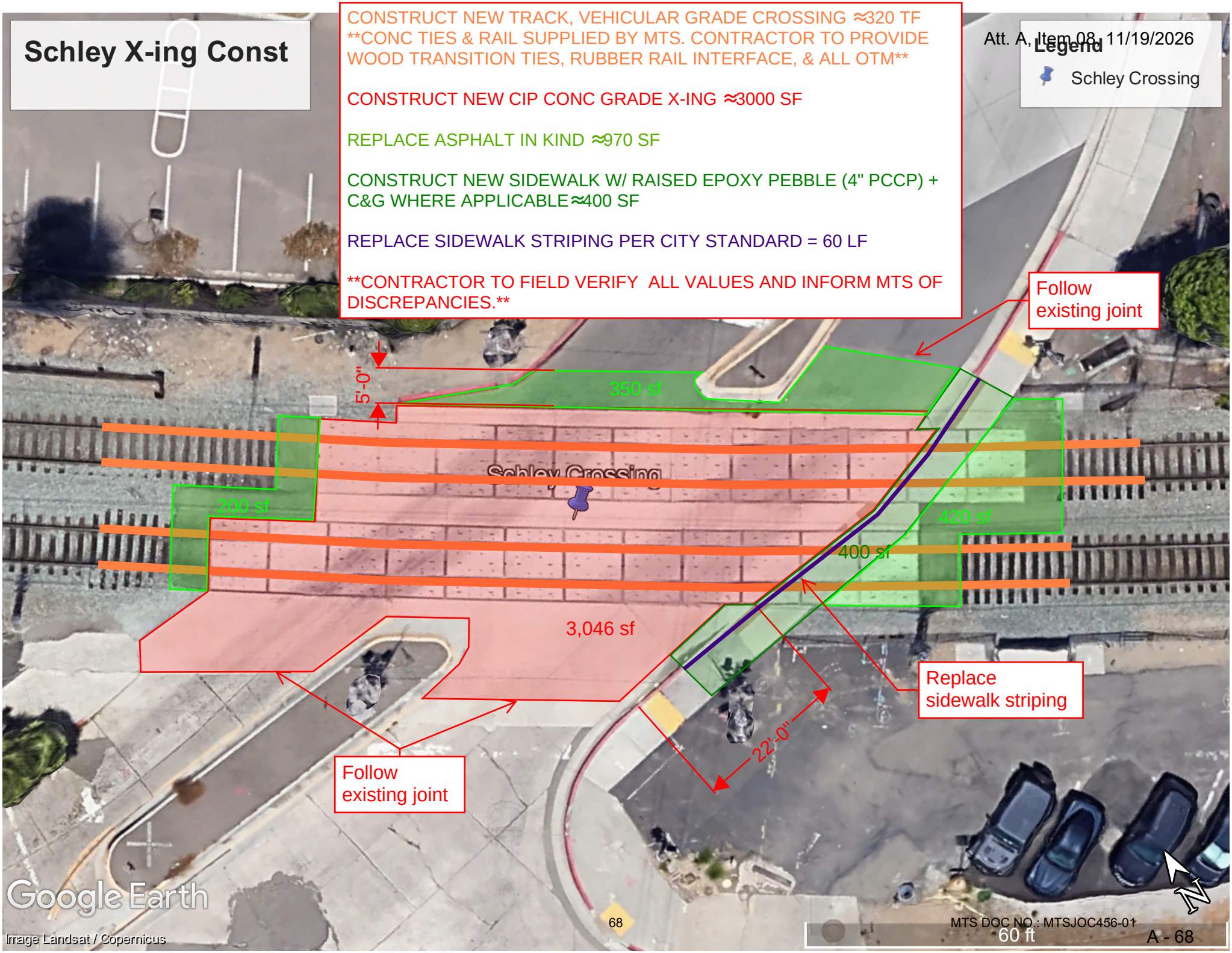

EXHIBIT B
(Cost Breakdown)

Price Proposal Detail Report

By Division
Version: 2.0
Approved
Proposal Value: $757,865.79
Approved Date: 10/12/2026 04:20:15 PM PST

Catalog: February 2026 - SDMTS - General Railroad

Job Order: MTSJOC456-01

Job Order Name: Schley Grade Crossing Replacement

Location: See Scope See Scope San Diego, CA 92101

Contractor: Domestic Rail Solutions Corp.
Contract Number: PWL456.0-26
Contract Name: JOC General Railroad Construction (Domestic Rail Solutions)

Division		Install Total	NPP Total	Demo Total	Division Total
01	General Requirements	$188,168.77	$0.00	$0.00	$188,168.77
02	Existing Conditions	$37,454.63	$0.00	$0.00	$37,454.63
31	Earthwork	$4,569.12	$0.00	$0.00	$4,569.12
32	Exterior Improvements	$31,255.69	$0.00	$0.00	$31,255.69
34	Transportation	$496,417.58	$0.00	$0.00	$496,417.58
	Total:	**$757,865.79**	**$0.00**	**$0.00**	**$757,865.79**

Line Count: 60 **Proposal Total: $757,865.79**

Total Reflects Filtered Statuses: Added, Clarification Requested, Clarified, Confirmed Removal, Modified, No Change, OverRuled, Rejected, Removed, Retained, System Removal Acknowledged by Contractor, System Removal Acknowledged by Owner, System Removed

The Percentage of Non Pre-Priced on this Proposal: 0.0%

** Includes Price Changes due to Construction Task Catalog update*

Price Proposal Detail Report

By Division
Version: 2.0
Approved
Proposal Value: $757,865.79
Approved Date: 10/12/2026 04:20:15 PM PST

Catalog: February 2026 - SDMTS - General Railroad

Job Order: MTSJOC456-01

Job Order Name: Schley Grade Crossing Replacement

Location: See Scope See Scope San Diego, CA 92101

Contractor: Domestic Rail Solutions Corp.
Contract Number: PWL456.0-26
Contract Name: JOC General Railroad Construction (Domestic Rail Solutions)

---

01 General Requirements **$188,168.77**

Record #	CSI Number	Description	Type	Quantity	Unit Price	UOM	Factor	Line Total
1	012220000024	Equipment Operator, Group 10		60.00	$131.24	HR	1.8000	$14,173.92

Accepted

History: 1.1 Added,1.2 Removed,1.3 Modified,1.4 Accepted,1.5 Accepted,2.0 Accepted

Includes Labor Yes **Includes Equipment No** **Includes Materials No**

Owner Comments: *V:1.2-Build bid using appropriate catalog task items*

Item Note: For tasks not included in the Construction Task Catalog® and as directed by owner only.

Total:	**$14,173.92**
Division 01 General Requirements Total:	**$14,173.92**

Record #	CSI Number	Description	Type	Quantity	Unit Price	UOM	Factor	Line Total
2	012220000027	Laborer		30.00	$101.64	HR	1.8000	$5,488.56

Accepted

History: 1.1 Added,1.2 Removed,1.3 Modified,1.4 Clarification Requested,1.5 Modified,2.0 Accepted

Includes Labor Yes **Includes Equipment No** **Includes Materials No**

Owner Comments: *V:1.2-Build bid using appropriate catalog task items,V:1.4-Clarify extra labor hours,V:2.0-MTS will assist in contacting NASSCO prior to the start of work, however, DRS is responsible for all final coordination of traffic in these lots and surrounding work area per the scope of work and traffic control / noise permitting process.*

User Note: During the joint job walk between DRS & SDMTS on August 7th, It was observed that Schley Street had consistently high levels of vehicular and pedestrian traffic due the the heavy industry in the area.

The work area also encompasses the only ingress to NASSCO Lot 7 and the only ingress and egress for NASSCO Lot 3. Labor was initially included to facilitate redirecting traffic during work operations.

We will make a reduction and remove hours intended for this operation. However, to avoid potential harm and injury to the public we request SDMTS Notify NASSCO that other arrangements should be made for employees that utilize Lots 3 and 7 during weekend work outage.

Other hours are intended to hand out fliers to local area businesses.

Item Note: For tasks not included in the Construction Task Catalog® and as directed by owner only.

Total:	**$5,488.56**
Division 01 General Requirements Total:	**$5,488.56**

** Includes Price Changes due to Construction Task Catalog update*

Price Proposal Detail Report

By Division
Version: 2.0
Approved
Proposal Value: $757,865.79
Approved Date: 10/12/2026 04:20:15 PM PST

Catalog: February 2026 - SDMTS - General Railroad

Job Order: MTSJOC456-01

Job Order Name: Schley Grade Crossing Replacement

Location: See Scope See Scope San Diego, CA 92101

Contractor: Domestic Rail Solutions Corp.
Contract Number: PWL456.0-26
Contract Name: JOC General Railroad Construction (Domestic Rail Solutions)

Record #	CSI Number	Description	Type	Quantity	Unit Price	UOM	Factor	Line Total
3	012220000078	Project Manager		20.00	$160.00	HR	1.8000	$5,760.00

Accepted

History: 1.1 Added,1.2 Removed,1.3 Modified,1.4 Accepted,1.5 Accepted,2.0 Accepted

Includes Labor Yes **Includes Equipment No** **Includes Materials No**

Owner Comments: *V:1.2-Build bid using appropriate catalog task items*

Item Note: For tasks not included in the Construction Task Catalog® and as directed by owner only.

Total:	**$5,760.00**
Division 01 General Requirements Total:	**$5,760.00**

Record #	CSI Number	Description	Type	Quantity	Unit Price	UOM	Factor	Line Total
4	012223000279	1,500 To 1,700 Lb. Capacity, 60" Wide, Skid-Steer Loader With Full-Time Operator		4.00	$1,470.06	DAY	1.8000	$10,584.43

Accepted

History: 1.1 Added,1.2 Removed,1.3 Modified,1.4 Accepted,1.5 Accepted,2.0 Accepted

Includes Labor Yes **Includes Equipment No** **Includes Materials Yes**

Owner Comments: *V:1.2-Build bid using appropriate catalog task items*

Total:	**$10,584.43**
Division 01 General Requirements Total:	**$10,584.43**

Record #	CSI Number	Description	Type	Quantity	Unit Price	UOM	Factor	Line Total
5	012223000297	Backhoe Attachment For Skid-Steer Loaders		4.00	$133.82	DAY	1.8000	$963.50

Accepted

History: 1.1 Added,1.2 Removed,1.3 Modified,1.4 Accepted,1.5 Accepted,2.0 Accepted

Includes Labor No **Includes Equipment No** **Includes Materials Yes**

Owner Comments: *V:1.2-Build bid using appropriate catalog task items*

Total:	**$963.50**
Division 01 General Requirements Total:	**$963.50**

** Includes Price Changes due to Construction Task Catalog update*

Price Proposal Detail Report

By Division
Version: 2.0
Approved
Proposal Value: $757,865.79
Approved Date: 10/12/2026 04:20:15 PM PST

Catalog: February 2026 - SDMTS - General Railroad

Job Order: MTSJOC456-01

Job Order Name: Schley Grade Crossing Replacement

Location: See Scope See Scope San Diego, CA 92101

Contractor: Domestic Rail Solutions Corp.
Contract Number: PWL456.0-26
Contract Name: JOC General Railroad Construction (Domestic Rail Solutions)

Record #	CSI Number	Description	Type	Quantity	Unit Price	UOM	Factor	Line Total
6	012223000381	3 To 3-3/4 CY Hydraulic Excavator With Full-Time Operator		4.00	$2,598.71	DAY	1.8000	$18,710.71
Accepted		***History: 1.3 Added,1.4 Accepted,1.5 Accepted,2.0 Accepted***						
		Includes Labor Yes	**Includes Equipment No**	**Includes Materials Yes**				

Total:	**$18,710.71**
Division 01 General Requirements Total:	**$18,710.71**

Record #	CSI Number	Description	Type	Quantity	Unit Price	UOM	Factor	Line Total
7	012223000390	Thumbs Or Grapple Attachment For Hydraulic Excavators		4.00	$94.36	DAY	1.8000	$679.39
Accepted		***History: 1.3 Added,1.4 Accepted,1.5 Accepted,2.0 Accepted***						
		Includes Labor No	**Includes Equipment No**	**Includes Materials Yes**				

Total:	**$679.39**
Division 01 General Requirements Total:	**$679.39**

Record #	CSI Number	Description	Type	Quantity	Unit Price	UOM	Factor	Line Total
8	012223000689	4 x 1,000 Watt Floodlights, 30' Telescoping Tower, Diesel Power Trailer Mounted Light Tower		4.00	$234.24	DAY	1.8000	$1,686.53
Accepted		***History: 1.3 Added,1.4 Accepted,1.5 Accepted,2.0 Accepted***						
		Includes Labor No	**Includes Equipment No**	**Includes Materials Yes**				

Total:	**$1,686.53**
Division 01 General Requirements Total:	**$1,686.53**

** Includes Price Changes due to Construction Task Catalog update*

Price Proposal Detail Report

By Division
Version: 2.0
Approved
Proposal Value: $757,865.79
Approved Date: 10/12/2026 04:20:15 PM PST

Catalog: February 2026 - SDMTS - General Railroad

Job Order: MTSJOC456-01

Job Order Name: Schley Grade Crossing Replacement

Location: See Scope See Scope San Diego, CA 92101

Contractor: Domestic Rail Solutions Corp.
Contract Number: PWL456.0-26
Contract Name: JOC General Railroad Construction (Domestic Rail Solutions)

Record #	CSI Number	Description	Type	Quantity	Unit Price	UOM	Factor	Line Total
9	012223001468	6-1/2 Ton Capacity, 16' To 22' Bed, 4 x 2 Flat Bed Truck With Full-Time Truck Driver		4.00	$1,258.82	DAY	1.8000	$9,063.50
Accepted		***History: 1.3 Added,1.4 Accepted,1.5 Accepted,2.0 Accepted***						
		Includes Labor Yes	**Includes Equipment No**	**Includes Materials Yes**				
							Total:	**$9,063.50**
							Division 01 General Requirements Total:	**$9,063.50**

Record #	CSI Number	Description	Type	Quantity	Unit Price	UOM	Factor	Line Total
10	012223001485	1 To 2 Ton, 4 x 2 Service Truck With Full-Time Truck Driver		4.00	$1,087.12	DAY	1.8000	$7,827.26
Accepted		***History: 1.3 Added,1.4 Accepted,1.5 Accepted,2.0 Accepted***						
		Includes Labor Yes	**Includes Equipment No**	**Includes Materials Yes**				
							Total:	**$7,827.26**
							Division 01 General Requirements Total:	**$7,827.26**

Record #	CSI Number	Description	Type	Quantity	Unit Price	UOM	Factor	Line Total
11	012223001545	500 To 600 Gallon Water Trailer With Pump		4.00	$158.82	DAY	1.8000	$1,143.50
Accepted		***History: 1.3 Added,1.4 Accepted,1.5 Accepted,2.0 Accepted***						
		Includes Labor No	**Includes Equipment No**	**Includes Materials Yes**				
							Total:	**$1,143.50**
							Division 01 General Requirements Total:	**$1,143.50**

** Includes Price Changes due to Construction Task Catalog update*

Price Proposal Detail Report

By Division
Version: 2.0
Approved
Proposal Value: $757,865.79
Approved Date: 10/12/2026 04:20:15 PM PST

Catalog: February 2026 - SDMTS - General Railroad

Job Order: MTSJOC456-01

Job Order Name: Schley Grade Crossing Replacement

Location: See Scope See Scope San Diego, CA 92101

Contractor: Domestic Rail Solutions Corp.
Contract Number: PWL456.0-26
Contract Name: JOC General Railroad Construction (Domestic Rail Solutions)

Record #	CSI Number	Description	Type	Quantity	Unit Price	UOM	Factor	Line Total
12	012223001590	Highrail Truck With Crane And Full-time Driver		4.00	$989.87	DAY	1.8000	$7,127.06
Accepted		***History: 1.3 Added,1.4 Accepted,1.5 Accepted,2.0 Accepted***						
		Includes Labor Yes	**Includes Equipment No**	**Includes Materials Yes**				

Total:	**$7,127.06**
Division 01 General Requirements Total:	**$7,127.06**

Record #	CSI Number	Description	Type	Quantity	Unit Price	UOM	Factor	Line Total
13	012223001602	Speedswing Loader		4.00	$644.77	DAY	1.8000	$4,642.34
Accepted		***History: 1.3 Added,1.4 Accepted,1.5 Accepted,2.0 Accepted***						
		Includes Labor No	**Includes Equipment No**	**Includes Materials Yes**				

Total:	**$4,642.34**
Division 01 General Requirements Total:	**$4,642.34**

Record #	CSI Number	Description	Type	Quantity	Unit Price	UOM	Factor	Line Total
14	012223001671	Railroad Flat Car		4.00	$247.99	DAY	1.8000	$1,785.53
Accepted		***History: 1.3 Added,1.4 Accepted,1.5 Accepted,2.0 Accepted***						
		Includes Labor No	**Includes Equipment No**	**Includes Materials Yes**				

Total:	**$1,785.53**
Division 01 General Requirements Total:	**$1,785.53**

** Includes Price Changes due to Construction Task Catalog update*

Price Proposal Detail Report

By Division
Version: 2.0
Approved
Proposal Value: $757,865.79
Approved Date: 10/12/2026 04:20:15 PM PST

Catalog: February 2026 - SDMTS - General Railroad

Job Order: MTSJOC456-01

Job Order Name: Schley Grade Crossing Replacement

Location: See Scope See Scope San Diego, CA 92101

Contractor: Domestic Rail Solutions Corp.
Contract Number: PWL456.0-26
Contract Name: JOC General Railroad Construction (Domestic Rail Solutions)

Record #	CSI Number	Description	Type	Quantity	Unit Price	UOM	Factor	Line Total
15	017113000004	First 25 Miles, Equipment Delivery, Pickup, Mobilization And Demobilization Using A Tractor Trailer With Up To 53' Bed		10.00	$1,479.55	EA	1.8000	$26,631.90

Accepted

History: 1.3 Added,1.4 Modified,1.5 Accepted,2.0 Accepted

Includes Labor Yes **Includes Equipment Yes** **Includes Materials No**

Owner Comments: *V:1.4-Price is only for equipment that excludes mob in catalog.*

User Note: Shipping Equipment from Lang Yard In Santa Clarita

Item Note: Includes loading, tie-down of equipment, delivery of equipment, off loading on site, rigging, dismantling, loading for return and transporting away. For equipment such as bulldozers, motor scrapers, hydraulic excavators, gradalls, road graders, loader-backhoes, heavy-duty construction loaders, tractors, pavers, rollers, bridge finishers, straight mast construction forklifts, telescoping boom rough terrain construction forklifts, telescoping and articulating boom man lifts with >40' boom lengths, etc.

Total:	**$26,631.90**
Division 01 General Requirements Total:	**$26,631.90**

Record #	CSI Number	Description	Type	Quantity	Unit Price	UOM	Factor	Line Total
16	017113000005	>25 Miles, Equipment Delivery And Pickup Using A Tractor Trailer With Up To 53' Bed		1,360.00	$11.84	MI	1.0000	$16,102.40

Accepted

History: 1.5 Added,2.0 Accepted

Includes Labor Yes **Includes Equipment Yes** **Includes Materials No**

User Note: Santa Clarita Yard to Schley Street (161 Miles minus first 25 miles for each) 136 x 10 Ea.

Item Note: Excludes first 25 miles.

Total:	**$16,102.40**
Division 01 General Requirements Total:	**$16,102.40**

** Includes Price Changes due to Construction Task Catalog update*

Price Proposal Detail Report

By Division
Version: 2.0
Approved
Proposal Value: $757,865.79
Approved Date: 10/12/2026 04:20:15 PM PST

Catalog: February 2026 - SDMTS - General Railroad

Job Order: MTSJOC456-01

Job Order Name: Schley Grade Crossing Replacement

Location: See Scope See Scope San Diego, CA 92101

Contractor: Domestic Rail Solutions Corp.
Contract Number: PWL456.0-26
Contract Name: JOC General Railroad Construction (Domestic Rail Solutions)

Record #	CSI Number	Description	Type	Quantity	Unit Price	UOM	Factor	Line Total
17	017123160006	Conventional Topographic Survey Of Highly Developed Areas, Sidewalks, etc. (>65% Buildings)		1.00	$10,391.12	ACR	1.8000	$18,704.02
Accepted		***History: 1.3 Added,1.4 Accepted,1.5 Accepted,2.0 Accepted***						
			Includes Labor Yes	**Includes Equipment Yes**	**Includes Materials Yes**			

Total:	**$18,704.02**
Division 01 General Requirements Total:	**$18,704.02**

Record #	CSI Number	Description	Type	Quantity	Unit Price	UOM	Factor	Line Total
18	017419000021	Rampless Concrete Washout Bin		1.00	$527.45	MO	1.8000	$949.41
Accepted		***History: 1.1 Added,1.2 Removed,1.3 Modified,1.4 Accepted,1.5 Accepted,2.0 Accepted***						
			Includes Labor No	**Includes Equipment No**	**Includes Materials Yes**			
	Owner Comments:	*V:1.2-Build bid using appropriate catalog task items*						
	User Note:	Confirm contractor will be provided with an area to wash out concrete.						
	Item Note:	Includes delivery.						

Total:	**$949.41**
Division 01 General Requirements Total:	**$949.41**

Record #	CSI Number	Description	Type	Quantity	Unit Price	UOM	Factor	Line Total
19	017419000029	General Refuse		85.00	$214.81	TON	1.8000	$32,865.93
Accepted		***History: 1.3 Added,1.4 Accepted,1.5 Accepted,2.0 Accepted***						
			Includes Labor No	**Includes Equipment No**	**Includes Materials Yes**			

Total:	**$32,865.93**
Division 01 General Requirements Total:	**$32,865.93**

** Includes Price Changes due to Construction Task Catalog update*

Price Proposal Detail Report

By Division
Version: 2.0
Approved
Proposal Value: $757,865.79
Approved Date: 10/12/2026 04:20:15 PM PST

Catalog: February 2026 - SDMTS - General Railroad

Job Order: MTSJOC456-01

Job Order Name: Schley Grade Crossing Replacement

Location: See Scope See Scope San Diego, CA 92101

Contractor: Domestic Rail Solutions Corp.
Contract Number: PWL456.0-26
Contract Name: JOC General Railroad Construction (Domestic Rail Solutions)

Record #	CSI Number	Description	Type	Quantity	Unit Price	UOM	Factor	Line Total
20	017419000040	Hauling With 16 To 20 CY Dump Truck, Up To 15 Miles		8.00	$173.45	EA	1.8000	$2,497.68
Accepted		***History: 1.3 Added,1.4 Accepted,1.5 Accepted,2.0 Accepted***						
		Includes Labor Yes	**Includes Equipment Yes**	**Includes Materials No**				

Item Note: Each first 15 miles per trip

Total:	**$2,497.68**
Division 01 General Requirements Total:	**$2,497.68**

Record #	CSI Number	Description	Type	Quantity	Unit Price	UOM	Factor	Line Total
21	017419000040	For Each Additional Mile Over First 15 Miles, Add Per Mile **MOD: 0097**		200.00	$2.17	EA	1.8000	$781.20
Accepted		***History: 1.3 Added,1.4 Accepted,1.5 Accepted,2.0 Accepted***						
		Includes Labor Yes	**Includes Equipment Yes**	**Includes Materials No**				

Total:	**$781.20**
Division 01 General Requirements Total:	**$781.20**

02 Existing Conditions **$37,454.63**

Record #	CSI Number	Description	Type	Quantity	Unit Price	UOM	Factor	Line Total
22	024113130005	>9" To 12" By Machine, Break-up And Remove Bituminous Paving		90.00	$42.15	SY	1.8000	$6,828.30
Accepted		***History: 1.3 Added,1.4 Accepted,1.5 Accepted,2.0 Accepted***						
		Includes Labor Yes	**Includes Equipment Yes**	**Includes Materials No**				

Total:	**$6,828.30**
Division 02 Existing Conditions Total:	**$6,828.30**

** Includes Price Changes due to Construction Task Catalog update*

Price Proposal Detail Report

By Division
Version: 2.0
Approved
Proposal Value: $757,865.79
Approved Date: 10/12/2026 04:20:15 PM PST

Catalog: February 2026 - SDMTS - General Railroad

Job Order: MTSJOC456-01

Job Order Name: Schley Grade Crossing Replacement

Location: See Scope See Scope San Diego, CA 92101

Contractor: Domestic Rail Solutions Corp.
Contract Number: PWL456.0-26
Contract Name: JOC General Railroad Construction (Domestic Rail Solutions)

Record #	CSI Number	Description	Type	Quantity	Unit Price	UOM	Factor	Line Total
23	024113130017	>6" To 9" By Machine, Break-up And Remove Rod Reinforced Concrete Paving		150.00	$64.91	SY	1.8000	$17,525.70
Accepted		***History: 1.3 Added,1.4 Accepted,1.5 Accepted,2.0 Accepted***						

Includes Labor Yes **Includes Equipment Yes** **Includes Materials No**

Total:	**$17,525.70**
Division 02 Existing Conditions Total:	**$17,525.70**

Record #	CSI Number	Description	Type	Quantity	Unit Price	UOM	Factor	Line Total
24	024113130027	>3" To 6" By Hand, Break-up And Remove Welded Wire Reinforced Concrete Paving		240.00	$11.04	SF	1.8000	$4,769.28
Accepted		***History: 1.3 Added,1.4 Accepted,1.5 Accepted,2.0 Accepted***						

Includes Labor Yes **Includes Equipment Yes** **Includes Materials No**

Total:	**$4,769.28**
Division 02 Existing Conditions Total:	**$4,769.28**

Record #	CSI Number	Description	Type	Quantity	Unit Price	UOM	Factor	Line Total
25	024119130058	Saw Cut Minimum Set-up Charge, One Per Project		1.00	$1,218.53	EA	1.8000	$2,193.35
Accepted		***History: 1.3 Added,1.4 Accepted,1.5 Accepted,2.0 Accepted***						

Includes Labor Yes **Includes Equipment Yes** **Includes Materials Yes**

Item Note: For projects where the total saw cutting charge is less than the minimum charge, use this task exclusively. This task should not be used in conjunction with any other tasks in this section.

Total:	**$2,193.35**
Division 02 Existing Conditions Total:	**$2,193.35**

** Includes Price Changes due to Construction Task Catalog update*

Price Proposal Detail Report

By Division
Version: 2.0
Approved
Proposal Value: $757,865.79
Approved Date: 10/12/2026 04:20:15 PM PST

Catalog: February 2026 - SDMTS - General Railroad

Job Order: MTSJOC456-01

Job Order Name: Schley Grade Crossing Replacement

Location: See Scope See Scope San Diego, CA 92101

Contractor: Domestic Rail Solutions Corp.
Contract Number: PWL456.0-26
Contract Name: JOC General Railroad Construction (Domestic Rail Solutions)

Record #	CSI Number	Description	Type	Quantity	Unit Price	UOM	Factor	Line Total
26	024119130067	Concrete And Asphalt Up To 4" Depth, Saw Cut In Streets		1,000.00	$3.41	LF	1.8000	$6,138.00
Accepted		***History: 1.3 Added,1.4 Modified,1.5 Accepted,2.0 Accepted***						
		Includes Labor Yes	**Includes Equipment Yes**	**Includes Materials Yes**				
	Owner Comments:	*V:1.4-Show extra 1000lf*						

Total:	**$6,138.00**
Division 02 Existing Conditions Total:	**$6,138.00**

31 Earthwork **$4,569.12**

Record #	CSI Number	Description	Type	Quantity	Unit Price	UOM	Factor	Line Total
27	313219160010	16 Ounce/SY, 175 Mil, 425 Lb. Grab Tensile Nonwoven Polypropylene Geotextile Fabric		334.00	$7.23	SY	1.8000	$4,346.68
Accepted		***History: 1.3 Added,1.4 Accepted,1.5 Accepted,2.0 Accepted***						
		Includes Labor Yes	**Includes Equipment No**	**Includes Materials Yes**				

Total:	**$4,346.68**
Division 31 Earthwork Total:	**$4,346.68**

Record #	CSI Number	Description	Type	Quantity	Unit Price	UOM	Factor	Line Total
28	313219160010	For >250 To 500, Add **MOD: 0092**		334.00	$0.37	SY	1.8000	$222.44
Accepted		***History: 1.3 Added,1.4 Accepted,1.5 Accepted,2.0 Accepted***						
		Includes Labor Yes	**Includes Equipment No**	**Includes Materials Yes**				

Total:	**$222.44**
Division 31 Earthwork Total:	**$222.44**

32 Exterior Improvements **$31,255.69**

** Includes Price Changes due to Construction Task Catalog update*

Price Proposal Detail Report

By Division
Version: 2.0
Approved
Proposal Value: $757,865.79
Approved Date: 10/12/2026 04:20:15 PM PST

Catalog: February 2026 - SDMTS - General Railroad

Job Order: MTSJOC456-01

Job Order Name: Schley Grade Crossing Replacement

Location: See Scope See Scope San Diego, CA 92101

Contractor: Domestic Rail Solutions Corp.
Contract Number: PWL456.0-26
Contract Name: JOC General Railroad Construction (Domestic Rail Solutions)

Record #	CSI Number	Description	Type	Quantity	Unit Price	UOM	Factor	Line Total
29	321116160010	9" Class II Crushed Aggregate Base Course		107.00	$26.68	SY	1.8000	$5,138.57
Accepted		***History: 1.3 Added,1.4 Accepted,1.5 Accepted,2.0 Accepted***						
		Includes Labor Yes	**Includes Equipment Yes**	**Includes Materials Yes**				

Total:	**$5,138.57**
Division 32 Exterior Improvements Total:	**$5,138.57**

Record #	CSI Number	Description	Type	Quantity	Unit Price	UOM	Factor	Line Total
30	321116160010	For Up To 500, Add **MOD: 0007**		107.00	$6.81	SY	1.8000	$1,311.61
Accepted		***History: 1.3 Added,1.4 Accepted,1.5 Accepted,2.0 Accepted***						
		Includes Labor Yes	**Includes Equipment Yes**	**Includes Materials Yes**				

Total:	**$1,311.61**
Division 32 Exterior Improvements Total:	**$1,311.61**

Record #	CSI Number	Description	Type	Quantity	Unit Price	UOM	Factor	Line Total
31	321123160004	4" Crushed Aggregate Base Course For Sidewalks		400.00	$1.34	SF	1.8000	$964.80
Accepted		***History: 1.3 Added,1.4 Accepted,1.5 Accepted,2.0 Accepted***						
		Includes Labor Yes	**Includes Equipment Yes**	**Includes Materials Yes**				

Total:	**$964.80**
Division 32 Exterior Improvements Total:	**$964.80**

** Includes Price Changes due to Construction Task Catalog update*

Price Proposal Detail Report

By Division
Version: 2.0
Approved
Proposal Value: $757,865.79
Approved Date: 10/12/2026 04:20:15 PM PST

Catalog: February 2026 - SDMTS - General Railroad

Job Order: MTSJOC456-01

Job Order Name: Schley Grade Crossing Replacement

Location: See Scope See Scope San Diego, CA 92101

Contractor: Domestic Rail Solutions Corp.
Contract Number: PWL456.0-26
Contract Name: JOC General Railroad Construction (Domestic Rail Solutions)

Record #	CSI Number	Description	Type	Quantity	Unit Price	UOM	Factor	Line Total
32	321123160004	For Up To 1,000, Add **MOD: 0011**		400.00	$0.37	SF	1.8000	$266.40
Accepted		***History: 1.3 Added,1.4 Accepted,1.5 Accepted,2.0 Accepted***						
		Includes Labor Yes	**Includes Equipment Yes**	**Includes Materials Yes**				

Total:	**$266.40**
Division 32 Exterior Improvements Total:	**$266.40**

Record #	CSI Number	Description	Type	Quantity	Unit Price	UOM	Factor	Line Total
33	321216130005	2" Thick Bituminous Hot Mix Intermediate Binder Course		160.50	$19.07	SY	1.8000	$5,509.32
Accepted		***History: 1.3 Added,1.4 Accepted,1.5 Accepted,2.0 Accepted***						
		Includes Labor Yes	**Includes Equipment Yes**	**Includes Materials Yes**				

Item Note: Includes placement, rolling, finishing and sweeping.

Total:	**$5,509.32**
Division 32 Exterior Improvements Total:	**$5,509.32**

Record #	CSI Number	Description	Type	Quantity	Unit Price	UOM	Factor	Line Total
34	321216130005	For PG64-10 Asphalt, Add **MOD: 0392**		160.50	$2.30	SY	1.8000	$664.47
Accepted		***History: 1.3 Added,1.4 Accepted,1.5 Accepted,2.0 Accepted***						
		Includes Labor No	**Includes Equipment No**	**Includes Materials Yes**				

Total:	**$664.47**
Division 32 Exterior Improvements Total:	**$664.47**

** Includes Price Changes due to Construction Task Catalog update*

Price Proposal Detail Report

By Division
Version: 2.0
Approved
Proposal Value: $757,865.79
Approved Date: 10/12/2026 04:20:15 PM PST

Catalog: February 2026 - SDMTS - General Railroad

Job Order: MTSJOC456-01

Job Order Name: Schley Grade Crossing Replacement

Location: See Scope See Scope San Diego, CA 92101

Contractor: Domestic Rail Solutions Corp.
Contract Number: PWL456.0-26
Contract Name: JOC General Railroad Construction (Domestic Rail Solutions)

Record #	CSI Number	Description	Type	Quantity	Unit Price	UOM	Factor	Line Total
35	321216130005	For Up To 500, Add **MOD: 0426**		160.50	$2.58	SY	1.8000	$745.36
Accepted		***History: 1.3 Added,1.4 Accepted,1.5 Accepted,2.0 Accepted***						
		Includes Labor Yes	**Includes Equipment Yes**	**Includes Materials Yes**				

Total:	**$745.36**
Division 32 Exterior Improvements Total:	**$745.36**

Record #	CSI Number	Description	Type	Quantity	Unit Price	UOM	Factor	Line Total
36	321216130018	2" Thick Bituminous Hot Mix Surface Wearing Course		160.50	$18.42	SY	1.8000	$5,321.54
Accepted		***History: 1.3 Added,1.4 Accepted,1.5 Accepted,2.0 Accepted***						
		Includes Labor Yes	**Includes Equipment Yes**	**Includes Materials Yes**				

Item Note: Includes placement, rolling, finishing and sweeping.

Total:	**$5,321.54**
Division 32 Exterior Improvements Total:	**$5,321.54**

Record #	CSI Number	Description	Type	Quantity	Unit Price	UOM	Factor	Line Total
37	321216130018	For PG64-10 Asphalt, Add **MOD: 0006**		160.50	$1.05	SY	1.8000	$303.35
Accepted		***History: 1.3 Added,1.4 Accepted,1.5 Accepted,2.0 Accepted***						
		Includes Labor No	**Includes Equipment No**	**Includes Materials Yes**				

Total:	**$303.35**
Division 32 Exterior Improvements Total:	**$303.35**

** Includes Price Changes due to Construction Task Catalog update*

Price Proposal Detail Report

By Division
Version: 2.0
Approved
Proposal Value: $757,865.79
Approved Date: 10/12/2026 04:20:15 PM PST

Catalog: February 2026 - SDMTS - General Railroad

Job Order: MTSJOC456-01

Job Order Name: Schley Grade Crossing Replacement

Location: See Scope See Scope San Diego, CA 92101

Contractor: Domestic Rail Solutions Corp.
Contract Number: PWL456.0-26
Contract Name: JOC General Railroad Construction (Domestic Rail Solutions)

Record #	CSI Number	Description	Type	Quantity	Unit Price	UOM	Factor	Line Total
38	321216130018	For Up To 500, Add **MOD: 0426**		160.50	$2.65	SY	1.8000	$765.59
Accepted		***History: 1.3 Added,1.4 Accepted,1.5 Accepted,2.0 Accepted***						
		Includes Labor Yes	**Includes Equipment Yes**	**Includes Materials Yes**				

Total:	**$765.59**
Division 32 Exterior Improvements Total:	**$765.59**

Record #	CSI Number	Description	Type	Quantity	Unit Price	UOM	Factor	Line Total
39	321623000002	4" Cast In Place Concrete Sidewalk		400.00	$10.25	SF	1.8000	$7,380.00
Accepted		***History: 1.3 Added,1.4 Accepted,1.5 Accepted,2.0 Accepted***						
		Includes Labor Yes	**Includes Equipment Yes**	**Includes Materials Yes**				

User Note: High-early mix not provided in modifiers

Total:	**$7,380.00**
Division 32 Exterior Improvements Total:	**$7,380.00**

Record #	CSI Number	Description	Type	Quantity	Unit Price	UOM	Factor	Line Total
40	321623000002	For >100 To 500, Add **MOD: 0094**		400.00	$1.24	SF	1.8000	$892.80
Accepted		***History: 1.3 Added,1.4 Accepted,1.5 Accepted,2.0 Accepted***						
		Includes Labor Yes	**Includes Equipment No**	**Includes Materials Yes**				

Total:	**$892.80**
Division 32 Exterior Improvements Total:	**$892.80**

** Includes Price Changes due to Construction Task Catalog update*

Price Proposal Detail Report

By Division
Version: 2.0
Approved
Proposal Value: $757,865.79
Approved Date: 10/12/2026 04:20:15 PM PST

Catalog: February 2026 - SDMTS - General Railroad

Job Order: MTSJOC456-01

Job Order Name: Schley Grade Crossing Replacement

Location: See Scope See Scope San Diego, CA 92101

Contractor: Domestic Rail Solutions Corp.
Contract Number: PWL456.0-26
Contract Name: JOC General Railroad Construction (Domestic Rail Solutions)

Record #	CSI Number	Description	Type	Quantity	Unit Price	UOM	Factor	Line Total
41	321623000002	For 4,500 PSI Concrete, Add **MOD: 0101**		400.00	$0.27	SF	1.8000	$194.40
Accepted		***History: 1.3 Added,1.4 Accepted,1.5 Accepted,2.0 Accepted***						
		Includes Labor No	**Includes Equipment No**	**Includes Materials Yes**				

Total:	**$194.40**
Division 32 Exterior Improvements Total:	**$194.40**

Record #	CSI Number	Description	Type	Quantity	Unit Price	UOM	Factor	Line Total
42	321623000002	For Welded Wire Reinforcement, Add **MOD: 0102**		400.00	$0.89	SF	1.8000	$640.80
Accepted		***History: 1.3 Added,1.4 Accepted,1.5 Accepted,2.0 Accepted***						
		Includes Labor Yes	**Includes Equipment No**	**Includes Materials Yes**				

Total:	**$640.80**
Division 32 Exterior Improvements Total:	**$640.80**

Record #	CSI Number	Description	Type	Quantity	Unit Price	UOM	Factor	Line Total
43	321723330047	Single 8" Wide Solid Line, 60 Mil Thick, Preformed Patterned Thermoplastic Reflective Pavement Striping		60.00	$8.92	LF	1.8000	$963.36
Accepted		***History: 1.3 Added,1.4 Accepted,1.5 Accepted,2.0 Accepted***						
		Includes Labor Yes	**Includes Equipment Yes**	**Includes Materials Yes**				

Item Note: Includes yellow or white.

Total:	**$963.36**
Division 32 Exterior Improvements Total:	**$963.36**

** Includes Price Changes due to Construction Task Catalog update*

Price Proposal Detail Report

By Division
Version: 2.0
Approved
Proposal Value: $757,865.79
Approved Date: 10/12/2026 04:20:15 PM PST

Catalog: February 2026 - SDMTS - General Railroad

Job Order: MTSJOC456-01

Job Order Name: Schley Grade Crossing Replacement

Location: See Scope See Scope San Diego, CA 92101

Contractor: Domestic Rail Solutions Corp.
Contract Number: PWL456.0-26
Contract Name: JOC General Railroad Construction (Domestic Rail Solutions)

Record #	CSI Number	Description	Type	Quantity	Unit Price	UOM	Factor	Line Total
44	321723330047	For Up To 5,000 LF, Add **MOD: 0065**		60.00	$1.79	LF	1.8000	$193.32
Accepted		***History: 1.3 Added,1.4 Accepted,1.5 Accepted,2.0 Accepted***						
		Includes Labor Yes	**Includes Equipment Yes**	**Includes Materials Yes**				

Total:	**$193.32**
Division 32 Exterior Improvements Total:	**$193.32**

34 Transportation **$496,417.58**

Record #	CSI Number	Description	Type	Quantity	Unit Price	UOM	Factor	Line Total
45	341113230003	Field Welding Kit		8.00	$1,075.74	EA	1.8000	$15,490.66
Accepted		***History: 1.3 Added,1.4 Accepted,1.5 Accepted,2.0 Accepted***						
		Includes Labor Yes	**Includes Equipment Yes**	**Includes Materials Yes**				

Total:	**$15,490.66**
Division 34 Transportation Total:	**$15,490.66**

Record #	CSI Number	Description	Type	Quantity	Unit Price	UOM	Factor	Line Total
46	341113230004	Field Weld Testing		8.00	$81.67	EA	1.8000	$1,176.05
Accepted		***History: 1.3 Added,1.4 Accepted,1.5 Accepted,2.0 Accepted***						
		Includes Labor Yes	**Includes Equipment Yes**	**Includes Materials No**				

Total:	**$1,176.05**
Division 34 Transportation Total:	**$1,176.05**

** Includes Price Changes due to Construction Task Catalog update*

Price Proposal Detail Report

By Division
Version: 2.0
Approved
Proposal Value: $757,865.79
Approved Date: 10/12/2026 04:20:15 PM PST

Catalog: February 2026 - SDMTS - General Railroad

Job Order: MTSJOC456-01

Job Order Name: Schley Grade Crossing Replacement

Location: See Scope See Scope San Diego, CA 92101

Contractor: Domestic Rail Solutions Corp.
Contract Number: PWL456.0-26
Contract Name: JOC General Railroad Construction (Domestic Rail Solutions)

Record #	CSI Number	Description	Type	Quantity	Unit Price	UOM	Factor	Line Total
47	341113230005	Up To 1,600 TF, Aligning, Surfacing, Tamping And Finishing Track		1,600.00	$7.85	TF	1.8000	$22,608.00

Accepted

History: 1.3 Added,1.4 Modified,1.5 Modified,2.0 Accepted

Includes Labor Yes **Includes Equipment Yes** **Includes Materials No**

Owner Comments: *V:1.4-Unit pricing covers all passes required for aligning, surfacing, tamping, &amp finishing track.*

User Note: Standard for Surfacing, especially at crossings to surface past the work area to provide for smooth transition into existing track. This is done in multiple passes to improve safety and rideability for trains.

Total: $22,608.00

Division 34 Transportation Total: $22,608.00

Record #	CSI Number	Description	Type	Quantity	Unit Price	UOM	Factor	Line Total
48	341113230009	Distressing And Final Anchoring Of Continuous Welded Pandral Fastened Rail		960.00	$9.30	TF	1.8000	$16,070.40

Accepted

History: 1.3 Added,1.4 Accepted,1.5 Accepted,2.0 Accepted

Includes Labor Yes **Includes Equipment Yes** **Includes Materials No**

Total: $16,070.40

Division 34 Transportation Total: $16,070.40

Record #	CSI Number	Description	Type	Quantity	Unit Price	UOM	Factor	Line Total
49	341113230010	Ballast		160.00	$99.64	CY	1.8000	$28,696.32

Accepted

History: 1.3 Added,1.4 Accepted,1.5 Accepted,2.0 Accepted

Includes Labor Yes **Includes Equipment Yes** **Includes Materials Yes**

Item Note: 1.35 CY/Ton

Total: $28,696.32

Division 34 Transportation Total: $28,696.32

** Includes Price Changes due to Construction Task Catalog update*

Price Proposal Detail Report

By Division
Version: 2.0
Approved
Proposal Value: $757,865.79
Approved Date: 10/12/2026 04:20:15 PM PST

Catalog: February 2026 - SDMTS - General Railroad

Job Order: MTSJOC456-01

Job Order Name: Schley Grade Crossing Replacement

Location: See Scope See Scope San Diego, CA 92101

Contractor: Domestic Rail Solutions Corp.
Contract Number: PWL456.0-26
Contract Name: JOC General Railroad Construction (Domestic Rail Solutions)

Record #	CSI Number	Description	Type	Quantity	Unit Price	UOM	Factor	Line Total
50	341113230031	Install Owner Furnished 115 Lb. Rail		640.00	$17.78	LF	1.8000	$20,482.56
Accepted		***History: 1.3 Added,1.4 Accepted,1.5 Accepted,2.0 Accepted***						
		Includes Labor Yes	**Includes Equipment Yes**	**Includes Materials Yes**				

Item Note: Includes reuse of existing plates. Excludes ballast and ties.

Total:	**$20,482.56**
Division 34 Transportation Total:	**$20,482.56**

Record #	CSI Number	Description	Type	Quantity	Unit Price	UOM	Factor	Line Total
51	341113230039	10' Hardwood Tie Including Spikes And Plates		36.00	$324.52	EA	1.8000	$21,028.90
Accepted		***History: 1.3 Added,1.4 Accepted,1.5 Accepted,2.0 Accepted***						
		Includes Labor Yes	**Includes Equipment Yes**	**Includes Materials Yes**				

Total:	**$21,028.90**
Division 34 Transportation Total:	**$21,028.90**

Record #	CSI Number	Description	Type	Quantity	Unit Price	UOM	Factor	Line Total
52	341113230046	8'-3" Concrete Tie Including Pandrol Clips And Pads		130.00	$153.67	EA	1.8000	$35,958.78
Accepted		***History: 1.3 Added,1.4 Accepted,1.5 Accepted,2.0 Accepted***						
		Includes Labor Yes	**Includes Equipment Yes**	**Includes Materials No**				

Total:	**$35,958.78**
Division 34 Transportation Total:	**$35,958.78**

** Includes Price Changes due to Construction Task Catalog update*

Price Proposal Detail Report

By Division
Version: 2.0
Approved
Proposal Value: $757,865.79
Approved Date: 10/12/2026 04:20:15 PM PST

Catalog: February 2026 - SDMTS - General Railroad

Job Order: MTSJOC456-01

Job Order Name: Schley Grade Crossing Replacement

Location: See Scope See Scope San Diego, CA 92101

Contractor: Domestic Rail Solutions Corp.
Contract Number: PWL456.0-26
Contract Name: JOC General Railroad Construction (Domestic Rail Solutions)

Record #	CSI Number	Description	Type	Quantity	Unit Price	UOM	Factor	Line Total
53	341113230065	Removal And Disposal Of Existing Track		320.00	$21.27	TF	1.8000	$12,251.52
Accepted		***History: 1.3 Added,1.4 Accepted,1.5 Accepted,2.0 Accepted***						
			Includes Labor Yes	**Includes Equipment Yes**	**Includes Materials No**			

Item Note: Includes ties, rails, plates and spikes/clips.

Total:	**$12,251.52**
Division 34 Transportation Total:	**$12,251.52**

Record #	CSI Number	Description	Type	Quantity	Unit Price	UOM	Factor	Line Total
54	341113230066	Removal And Disposal Of Existing Track Crossing Panel		72.00	$70.07	EA	1.8000	$9,081.07
Accepted		***History: 1.3 Added,1.4 Accepted,1.5 Accepted,2.0 Accepted***						
			Includes Labor Yes	**Includes Equipment Yes**	**Includes Materials No**			

Total:	**$9,081.07**
Division 34 Transportation Total:	**$9,081.07**

Record #	CSI Number	Description	Type	Quantity	Unit Price	UOM	Factor	Line Total
55	341113230072	Removal Of Existing Ballast To A Depth Of 6'" Below Existing Tie		320.00	$50.80	TF	1.8000	$29,260.80
Accepted		***History: 1.3 Added,1.4 Accepted,1.5 Accepted,2.0 Accepted***						
			Includes Labor Yes	**Includes Equipment Yes**	**Includes Materials No**			

Total:	**$29,260.80**
Division 34 Transportation Total:	**$29,260.80**

** Includes Price Changes due to Construction Task Catalog update*

Price Proposal Detail Report

By Division
Version: 2.0
Approved
Proposal Value: $757,865.79
Approved Date: 10/12/2026 04:20:15 PM PST

Catalog: February 2026 - SDMTS - General Railroad

Job Order: MTSJOC456-01

Job Order Name: Schley Grade Crossing Replacement

Location: See Scope See Scope San Diego, CA 92101

Contractor: Domestic Rail Solutions Corp.
Contract Number: PWL456.0-26
Contract Name: JOC General Railroad Construction (Domestic Rail Solutions)

Record #	CSI Number	Description	Type	Quantity	Unit Price	UOM	Factor	Line Total
56	341113230076	Aligning, Surfacing, Tamping And Finishing Track Mobilization		1.00	$6,500.00	EA	1.8000	$11,700.00
Accepted		***History: 1.3 Added,1.4 Accepted,1.5 Accepted,2.0 Accepted***						
		Includes Labor No	**Includes Equipment Yes**	**Includes Materials No**				
							Total:	**$11,700.00**
							Division 34 Transportation Total:	**$11,700.00**

Record #	CSI Number	Description	Type	Quantity	Unit Price	UOM	Factor	Line Total
57	341193000006	Pandrol E-Clip, Galv.		520.00	$14.82	EA	1.8000	$13,871.52
Accepted		***History: 1.3 Added,1.4 Accepted,1.5 Accepted,2.0 Accepted***						
		Includes Labor No	**Includes Equipment Yes**	**Includes Materials Yes**				
							Total:	**$13,871.52**
							Division 34 Transportation Total:	**$13,871.52**

Record #	CSI Number	Description	Type	Quantity	Unit Price	UOM	Factor	Line Total
58	341193000008	Tie Pad		260.00	$13.21	EA	1.8000	$6,182.28
Accepted		***History: 1.3 Added,1.4 Accepted,1.5 Accepted,2.0 Accepted***						
		Includes Labor No	**Includes Equipment Yes**	**Includes Materials Yes**				
							Total:	**$6,182.28**
							Division 34 Transportation Total:	**$6,182.28**

** Includes Price Changes due to Construction Task Catalog update*

Price Proposal Detail Report

By Division
Version: 2.0
Approved
Proposal Value: $757,865.79
Approved Date: 10/12/2026 04:20:15 PM PST

Catalog: February 2026 - SDMTS - General Railroad

Job Order: MTSJOC456-01

Job Order Name: Schley Grade Crossing Replacement

Location: See Scope See Scope San Diego, CA 92101

Contractor: Domestic Rail Solutions Corp.
Contract Number: PWL456.0-26
Contract Name: JOC General Railroad Construction (Domestic Rail Solutions)

Record #	CSI Number	Description	Type	Quantity	Unit Price	UOM	Factor	Line Total
59	341193000023	Cast In Place Concrete Crossing Pavement		400.00	$188.68	SY	1.8000	$135,849.60
Accepted		***History: 1.3 Added,1.4 Accepted,1.5 Accepted,2.0 Accepted***						

Includes Labor Yes **Includes Equipment Yes** **Includes Materials Yes**

Item Note: Includes expansion and construction joints, filter fabric and 6 mil PVC sheeting.

Total:	**$135,849.60**
Division 34 Transportation Total:	**$135,849.60**

Record #	CSI Number	Description	Type	Quantity	Unit Price	UOM	Factor	Line Total
60	341193000027	EPFLEX® Railseal Interface For Non-Resistive Materials		320.00	$202.62	TF	1.8000	$116,709.12
Accepted		***History: 1.3 Added,1.4 Accepted,1.5 Accepted,2.0 Accepted***						

Includes Labor Yes **Includes Equipment Yes** **Includes Materials Yes**

Total:	**$116,709.12**
Division 34 Transportation Total:	**$116,709.12**
Proposal Total:	**$757,865.79**
Div **The Percentage of Non Pre-Priced on this Proposal:**	**0.0%**

** Includes Price Changes due to Construction Task Catalog update*

EXHIBIT C
(Subcontractor Listing)

San Diego Metropolitan Transit System

1255 Imperial Ave
San Diego, CA 92101

Subcontractor Report

Date: 10/21/2026

Job Order Contracting

Contract #: PWL456.0-26

Job Order #: MTSJOC456-01

Job Order Title: Schley Grade Crossing Replacement

Job Order Value: $757,865.79

Location: See Scope

Contractor: Domestic Rail Solutions Corp.

Subcontractors: Cable Pipe and Leak Detection

CONNORP81 INC

EBS GENERAL ENGINEERING

HUDSON SAFE-T-LITE

LAZER WEST ENGINEERING INC

Subcontractor Name	License Number	Describe Nature of Work (Trade)	Certifications	Subcontractor Total	Participation %
Cable Pipe and Leak Detection 1483 North 2nd street #201, El Cajon, CA 92021		Utility Locating	No Certification	$3,000.00	0.40%
CONNORP81 INC 6005 TYLER ST, Riverside, CA 92503	977475	Laborer	No Certification	$8,000.00	1.06%
EBS GENERAL ENGINEERING 1345 QUARRY ST, STE 101 Corona, CA 92879	720016	Mason	No Certification	$235,500.00	31.07%
HUDSON SAFE-T-LITE 1215 N Marshall Ave, El Cajon, CA 92020	788289	Laborer	No Certification	$25,000.00	3.30%
LAZER WEST ENGINEERING INC 11324 HIGHWAY 67, Lakeside, CA 92040	1029194	Heavy equipment operator	No Certification	$20,000.00	2.64%

Summary

Certification Name	Value	% Subcontracted
No Certification	$291,500.00	38.46%
Total	**$291,500.00**	**38.46%**

Metropolitan Transit System

DRAFT FOR EXECUTIVE COMMITTEE REVIEW DATE: 11/5/26

Agenda Item No. 09

MEETING OF THE SAN DIEGO METROPOLITAN TRANSIT SYSTEM
BOARD OF DIRECTORS

November 19, 2026

SUBJECT:

Investment Report – Quarter Ending September 30, 2026

INFORMATIONAL ONLY

Budget Impact

None.

DISCUSSION:

Board Policy 30 (Investment Policy), section 30.15, requires quarterly reports to the Board regarding the investment earnings and performance results of San Diego Metropolitan Transit System's (MTS) investment portfolio. This report is for the quarter ending September 30, 2026.

Attachment A comprises a report of the investments as of September 30, 2026.

The combined total of all investments has increased quarter to quarter from $406.5M to $409.7M. This $3.2M increase is primarily attributable to $78.4M in Federal Transit Administration (FTA) revenue for preventative maintenance, partially offset by $38.3 million in capital expenditures, a $12.1M administrative delay in Fiscal Year (FY) 27 TransNet funding, an $11.1M timing issue with Transit Development Act (TDA) funding, a $6.2M required payment to CalPERS to fund the actuarial liability, a $2.8M claim settlement as well as normal timing differences between other payments and receipts for both capital and operations.

The first column provides details about investments restricted for Capital Improvement Projects (CIP), SB125 funded operations, and PRONTO Stored Value.

The second column, unrestricted investments, reports the working capital for MTS operations allowing payments for employee payroll and vendors' goods and services.

MTS remains in compliance with Board Policy 30 and is able to meet expenditure requirements for a minimum of the next six months as required.

/s/ Sharon Cooney
Sharon Cooney
Chief Executive Officer

Key Staff Contact: Julia Tuer, 619.557.4515, Julia.Tuer@sdmts.com

Attachment: A. Investment Report for the Quarter Ending September 30, 2026

San Diego Metropolitan Transit System
Investment Report
September 30, 2026

Institution / Issuer	Function	Investment Type	Restricted	Unrestricted	Total	Avg. Rate of Return		Benchmark
J.P. Morgan Chase	Operating Funds	Depository Bank	-	39,888,340	39,888,340	1.43%	*	0.450% WSJ Money Market
American Business Bank - Retention Trust Account	Restricted for Capital Support	Depository Bank	348,245	-	348,245	N/A	**	-
Local Agency Investment Fund (LAIF)	Restricted (Stored Value)	Investment Pool	9,892,289	-	9,892,289	3.908%		3.425% S&P US T-Bill 0-3 Mth Index
San Diego County Treasurer's Office	State Grant Funds	Investment Pool	179,880,550	-	179,880,550	4.100%		3.425% S&P US T-Bill 0-3 Mth Index
Subtotal: Restricted			**190,121,085**	-	**190,121,085**			
Local Agency Investment Fund (LAIF)	Investment of Surplus Funds	Investment Pool	-	68,811,860	68,811,860	3.908%		3.425% S&P US T-Bill 0-3 Mth Index
San Diego County Treasurer's Office	Investment of Surplus Funds	Investment Pool	-	110,843,334	110,843,334	4.100%		3.425% S&P US T-Bill 0-3 Mth Index
Subtotal: Investment Surplus Funds			-	**179,655,194**	**179,655,194**			
Grand Total Cash and Investments			**$ 190,121,085**	**$ 219,543,534**	**$ 409,664,619**			

*-The 1.43% is an annual percentage yield on the average daily balance that exceeds $5.5 million
** - Per trust agreement, interest earned on retention account is allocated to trust beneficiary (contractor)

Metropolitan Transit System

63DRAFT FOR EXECUTIVE COMMITTEE REVIEW DATE: 11/5/2026

Agenda Item No. 10

MEETING OF THE SAN DIEGO METROPOLITAN TRANSIT SYSTEM
BOARD OF DIRECTORS

November 19, 2026

SUBJECT:

Adoption of the 2027 San Diego Metropolitan Transit System (MTS) Executive Committee and Board of Directors Meeting Schedule

RECOMMENDATION:

That the MTS Board of Directors adopt the 2027 Executive Committee and Board of Directors meeting schedule (Attachment A).

Budget Impact

None.

DISCUSSION:

The MTS Board of Directors annually adopts its meeting schedule for the next calendar year. The meeting schedule reflects Executive Committee and Board of Directors meetings throughout the 2027 calendar year (Attachment A).

/s/ Sharon Cooney
Sharon Cooney
Chief Executive Officer

Key Staff Contact: Julia Tuer, 619.557.4515, Julia.Tuer@sdmts.com

Attachment: A. 2027 MTS Executive Committee and Board of Directors Meeting Schedule

Metropolitan Transit System

2027

BOARD OF DIRECTORS AND EXECUTIVE COMMITTEE MEETING SCHEDULE

In-Person Participation: James R. Mills Building, 1255 Imperial Avenue, 10th Floor, San Diego CA 92101

Virtual Participation: 1(669) 254-5252; **EC** Webinar ID: 161 953 0340 **Board** Webinar ID: 160 280 5839

Executive Committee Meetings Thursdays at 9:00 a.m.	Board Meetings Thursdays at 9:00 a.m.
January 14	January 28
February 11	February 25
March 11	March 25
April 15	April 29
May 13	May 27
June 10	June 24
July 15	July 29
August NO MEETING	August NO MEETING
September 9	September 16
October 7	October 21
November 4	November 18
December 9	December 16

Metropolitan Transit System

DRAFT FOR EXECUTIVE COMMITTEE REVIEW DATE: 11/5/26

Agenda Item No. 11

MEETING OF THE SAN DIEGO METROPOLITAN TRANSIT SYSTEM
BOARD OF DIRECTORS

November 19, 2026

SUBJECT:

Operations Budget Status Report for September 2026

AGENDA ITEM WILL BE PROVIDED BEFORE BOARD MEETING

1255 Imperial Avenue, Suite 1000, San Diego, CA 92101-7490 • (619) 231-1466 • sdmts.com

San Diego Metropolitan Transit System (MTS) is a California public agency comprised of San Diego Transit Corp., San Diego Trolley, Inc. and San Diego and Arizona Eastern Railway Company (nonprofit public benefit corporations). MTS member agencies include the cities of Chula Vista, Coronado, El Cajon, Imperial Beach, La Mesa, Lemon Grove, National City, Poway, San Diego, Santee, and the County of San Diego. MTS is also the For-Hire Vehicle administrator for multiple cities in San Diego County.

